2 BY PUBLIC UTILITIES CONTRACTOR

2 BY PUBLIC WORKS CONTRACTOR

SYMBOL LEGEND

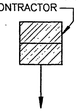

QTY, SIZE, & TYPE OF CONDUIT IN TRENCH

EB – DENOTES EB CONDUIT FULLY ENCASED IN CONCRETE
DB – DENOTES DIRECT–BURIED DB–100 CONDUIT
TC – DENOTES TERRA COTTA TILE DUCTS ENCASED

APPROXIMATE HORIZONTAL LENGTH OF RUN

TRENCH LINE

EXISTING FACILITIES

ABBREVIATIONS

G – GAS LINE
GRD – GROUND
I.P. – INTERSECTION POINT
IRR – IRRIGATION LINE
LT – LEFT OF ℄
ML – MATCH LINE
RP – POWER POLE W/RISER
RT – RIGHT OF ℄
S – SEWER LINE
T – TELEPHONE LINE
UGS – UNDERGROUND STRUCTURE STANDARDS OF THE ELECTRICAL DIVISION, DEPT. OF PUBLIC UTILITIES, CITY OF RIVERSIDE.
W – WATER LINE
WS – WATER SERVICE

STRUCTURE SCHEDULE

GENERAL INFORMATION					SPECIFICATIONS		INSTALLATION
SYMBOL	STRUCT.#	DESCRIPTION	SIZE	QTY.	ITEM NO.	DWG. NO.	DWG. NO.
		DUCT BANK	AS SHOWN	—	—	UGS–100	UGS–100.1 100.2, 110 (A) 116, 125, & 125.1, PW–200, 220, 325, & 453
	P–5742	TRANSFORMER SWITCH PAD WITH	13'x6'3" x7–1/2"	1	SPECIAL FIELD CONSTR.	––	DET. "A" UGS–623 (A)
		CABLE TRAINING BOXES	17'x30"x12"	4	ESB–5 (B)	UGS–009	UGS–320 UGS–621.1

(A) USE 560–C–3250 CONCRETE, MIN. OF 8" THICK, AT VAULT DUCT ENTRANCE, AND FOR PAD

(B) WITHOUT COVERS.

NOTES

1. ALL FACILITIES INSTALLED BY CONTRACTOR SHALL BE INSPECTED AND APPROVED BY THE DEPARTMENT CONSTRUCTION INSPECTOR (PH. 782–5429). ANY CHANGES SHALL BE APPROVED BY THE DEPARTMENT PRIOR TO EXECUTION.
2. PROVIDE AND INSTALL ALL SUBSTRUCTURES, CONDUITS, TRENCHING, BACKFILLING, & RESURFACING AS SHOWN AND AS LISTED IN THE STRUCTURE SCHEDULE.
3. ALL CONTRACTORS WORKING ON OR AROUND THE DEPARTMENTS UNDERGROUND ELECTRICAL FACILITIES MUST HAVE THE PROPERLY QUALIFIED PERSONNEL AND EQUIPMENT TO PERFORM THE SPECIFIED WORK. THE CONTRACTOR WILL BE SOLELY RESPONSIBLE TO ESTABLISH AND MAINTAIN A SAFE WORKING ENVIRONMENT INCLUDING, BUT NOT LIMITED TO WORK AROUND ENERGIZED HIGH VOLTAGE FACILITES, GAS TESTING OF CONFINED SPACES, TRAFFIC AND PROTECTION. THE DEPARTMENT'S POLICY IS TO WORK AND PROVIDE RADIO CONTACT WITH CITY OPERATIONS CONTROL.
4. THE CITY OBSERVER HAS THE AUTHORITY TO STOP THE CONTRACTOR'S WORK IF HE DETERMINES THAT ADEQUATE SAFETY PRECAUTIONS ARE NOT BEING TAKEN. HOWEVER, THE PRESENCE OF THE CITY OBSERVER DOES NOT RELIEVE THE CONTRACTOR OF HIS RESPONSIBILITY FOR INSURING SAFE AND APPROPRIATE WORK PRACTICES.
5. ACQUIRE A STREET OPENING PERMIT PRIOR TO EXCAVATING IN STREET RIGHT–OF–WAY.
6. (1) THE DUCT LINE INSTALLATION BETWEEN STA. 10+30 AND STA. 13+73 IS TO BE COORDINATED WITH THE PUBLIC WORKS DEPARTMENT STREET CONTRACTOR. ~~THE PUBLIC WORKS CONTRACT PROVIDES FOR 3 CONSECUTIVE WORKING DAYS AFTER REMOVAL OF THE EXISTING CURB AND GUTTER FOR THIS DUCT BANK INSTALLATION.~~ (2)

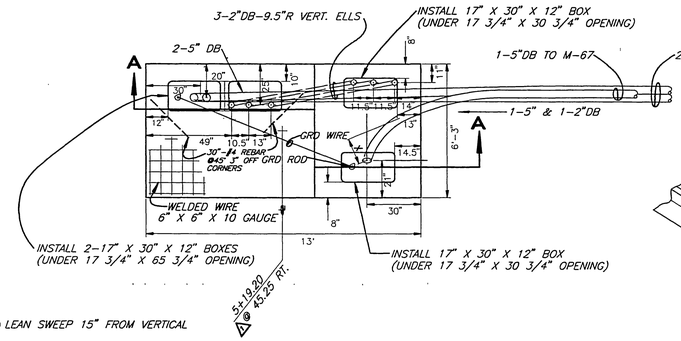

(2) LEAN SWEEP 15" FROM VERTICAL

FIELD POURED PAD
(13'x6'–3")
DETAIL "A"
SCALE: 1" = 40"

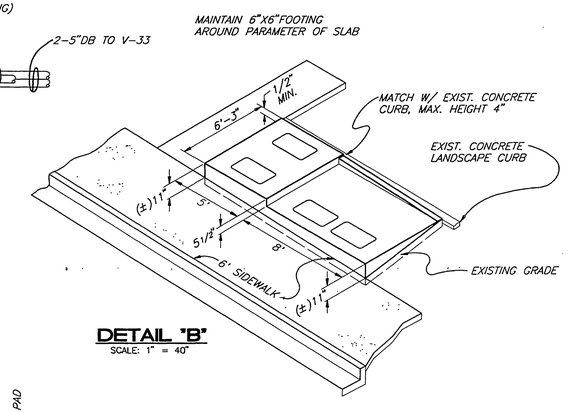

DETAIL "B"
SCALE: 1" = 40"

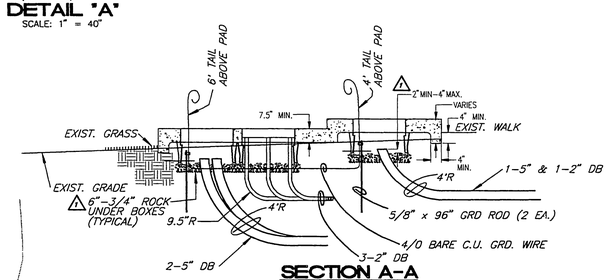

SECTION A–A
SCALE: 1" = 40"

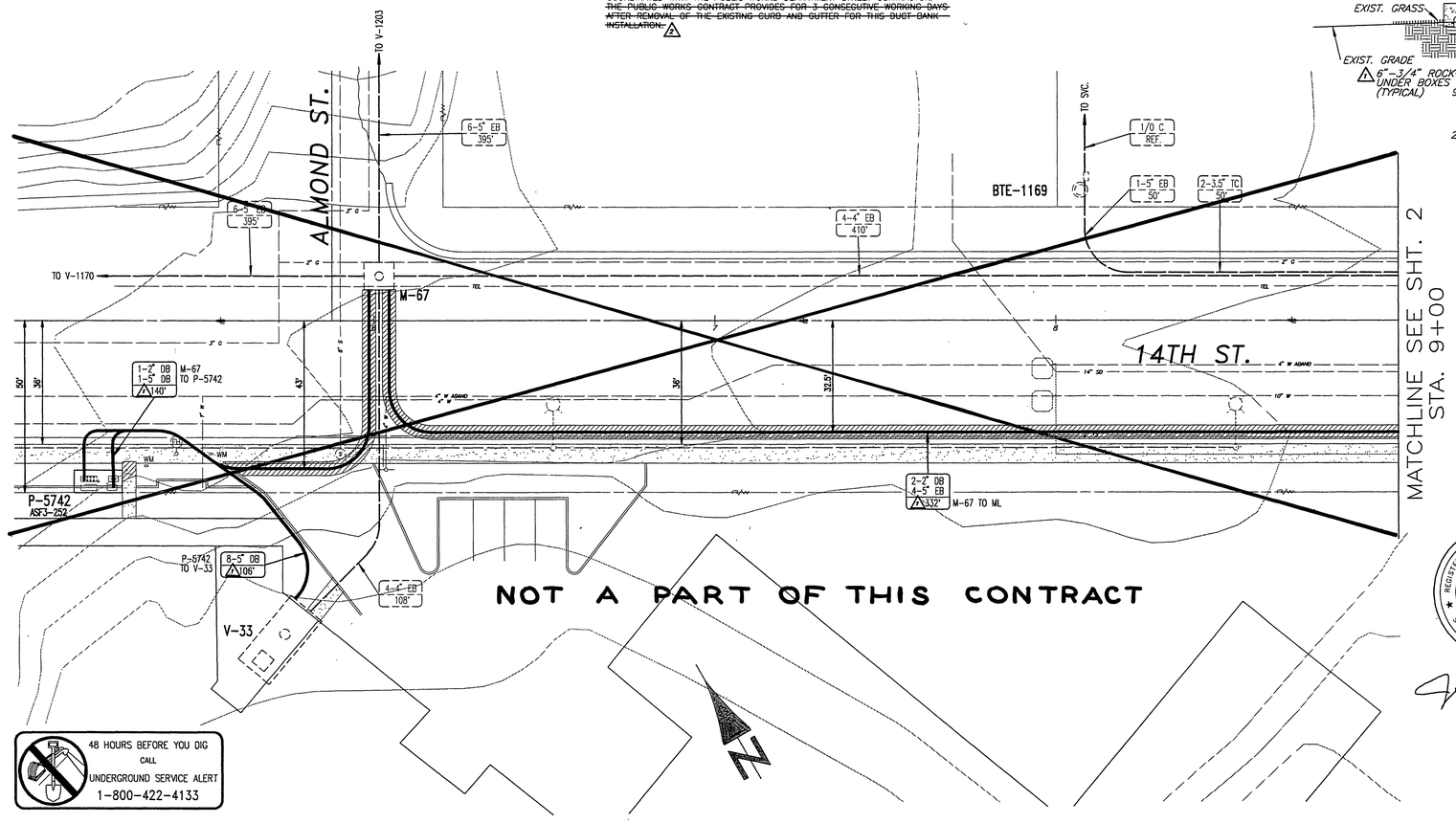

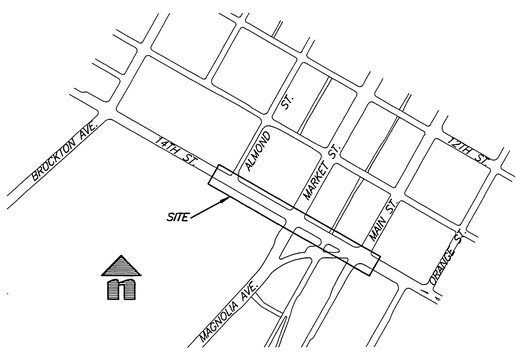

SITE LOCATION

48 HOURS BEFORE YOU DIG CALL UNDERGROUND SERVICE ALERT 1-800-422-4133

REGISTERED PROFESSIONAL ENGINEER JOHN L. SEVEY No. E 12863 Exp.12-31-96 ELECTRICAL STATE OF CALIFORNIA

John L. Sevey

REFERENCE DWGS.: U5–10420, U5–10428, U5–10439, U5–7300 U5–4305, U5–8100, U4–10642 & R–3326

UNDERGROUND ELECTRICAL FEEDER STRUCTURES FOR
14TH ST
ALMOND ST. TO MAIN ST.

ASBUILT	APPRVD.	REVISIONS	DATE	INV MAP 8–25
2		STA. 10+30.00 TO M–1826 ELIMINATE FROM PUBLIC UTILITIES CONTRACT. ADD TO PUBLIC WORKS CONTRACT	7–6 1995 WMW	
1		ADDED COORD. W/ PUBLIC WORKS ST. IMPROVEMENT MARKET TO MAIN AND OTHER CORRECTIONS.	2–21 1994 WMW	

SCALE 1" = 20' | DATE 03–28–94 | FILE NO. A1–15,16 | JPA NO. | ACCT. NO. 510–764200–470633

DRAWN W. WOODALL | CHECKED | APPROVED | BOARD DATE XX–XX–XX

CITY OF RIVERSIDE
DEPARTMENT OF PUBLIC UTILITIES

DIV. E | DRAWING NO. U5–4220–2 | SHEET 1 OF 2

INDEXED 11-9-95 GH
FILE W/R-3326

NAME: /tmp_mnt/thor4/dwg/wwoodall/U5–4220–1.DWG DATE: JUL 06, 1995 TIME: 2:30 PM

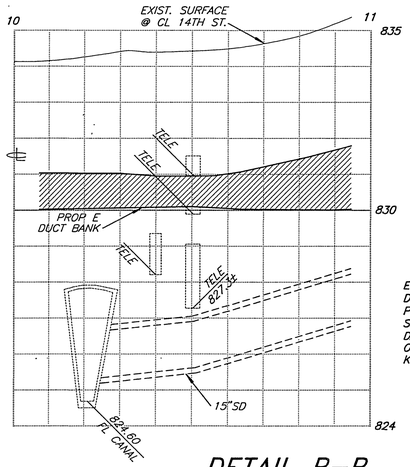

ELEVATIONS OF TELEPHONE DUCT BANKS TAKEN FROM PLOTS ON CITY OF RIVERSIDE STORM DRAIN PLAN D-198 DATED 3/19/70. ACCURACY OF THESE PLOTS ARE NOT KNOWN.

DETAIL B-B

SCALE: VERT. 1"= 2'
HORIZ. 1"= 20'

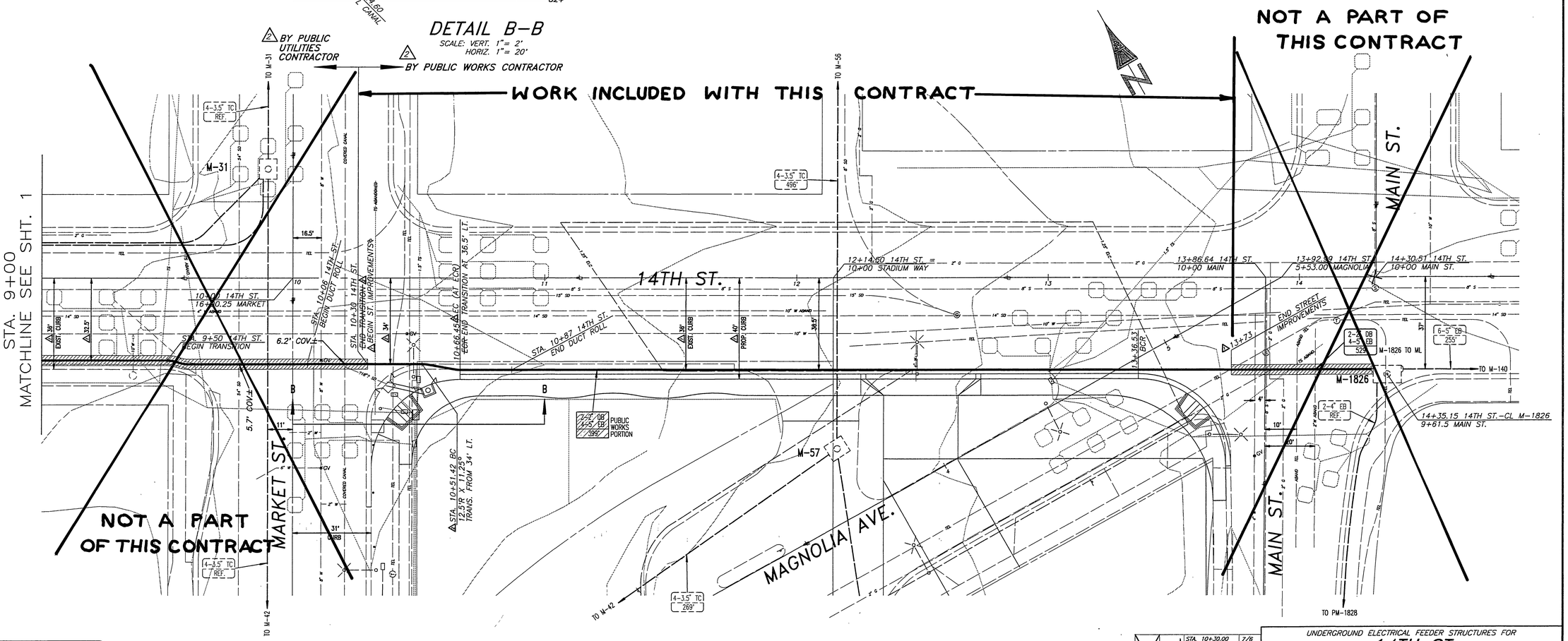

48 HOURS BEFORE YOU DIG
CALL
UNDERGROUND SERVICE ALERT
1-800-422-4133

ASBUILT	APPRVD.	REVISIONS	DATE
2		STA. 10+30.00 TO M-1826 ELIMINATE FROM PUBLIC UTILITIES CONTRACT. ADD. ADD TO PUBLIC WORKS CONTRACT.	7/6 1995 WWW
1		ADDED COORD. W/ PUBLIC WORKS IMP. MAIN TO MARKET	2/21 1995 WWW

UNDERGROUND ELECTRICAL FEEDER STRUCTURES FOR
14TH ST
ALMOND ST. TO MAIN ST.

SCALE 1" = 20'	DRAWN W. WOODALL	CITY OF RIVERSIDE DEPARTMENT OF PUBLIC UTILITIES	
DATE 03-28-94	CHECKED		
TILE NO. A1-15,16	APPROVED	DIV. E	DRAWING NO. U5-4220-2
JPA NO.	BOARD DATE XX-XX-XX		SHEET 2 OF 2
INV. MAP 8-25	ACCT. NO. 510-764200-470603		

INDEXED 11-9-95 GH
FILE W/ R-3326