℄ NMT CURVE DATA	℄ MMT CURVE DATA	℄ SMT CURVE DATA
Δ = 38°15'54"	Δ = 40°00'13"	Δ = 40°07'14"
D = 3°58'34"	D = 4°10'00"	D = 4°07'18"
T = 152.398	T = 152.599	T = 154.754
L = 293.3825	L = 292.698	L = 296.757
R = 439.294	R = 419.223	R = 423.795

NOTE: DEGREE OF CURVE BASED ON CHORD DEFINITION IN IMPERIAL UNITS (DEGREES SUBTENDED BY A CHORD OF 100'=30.48M).

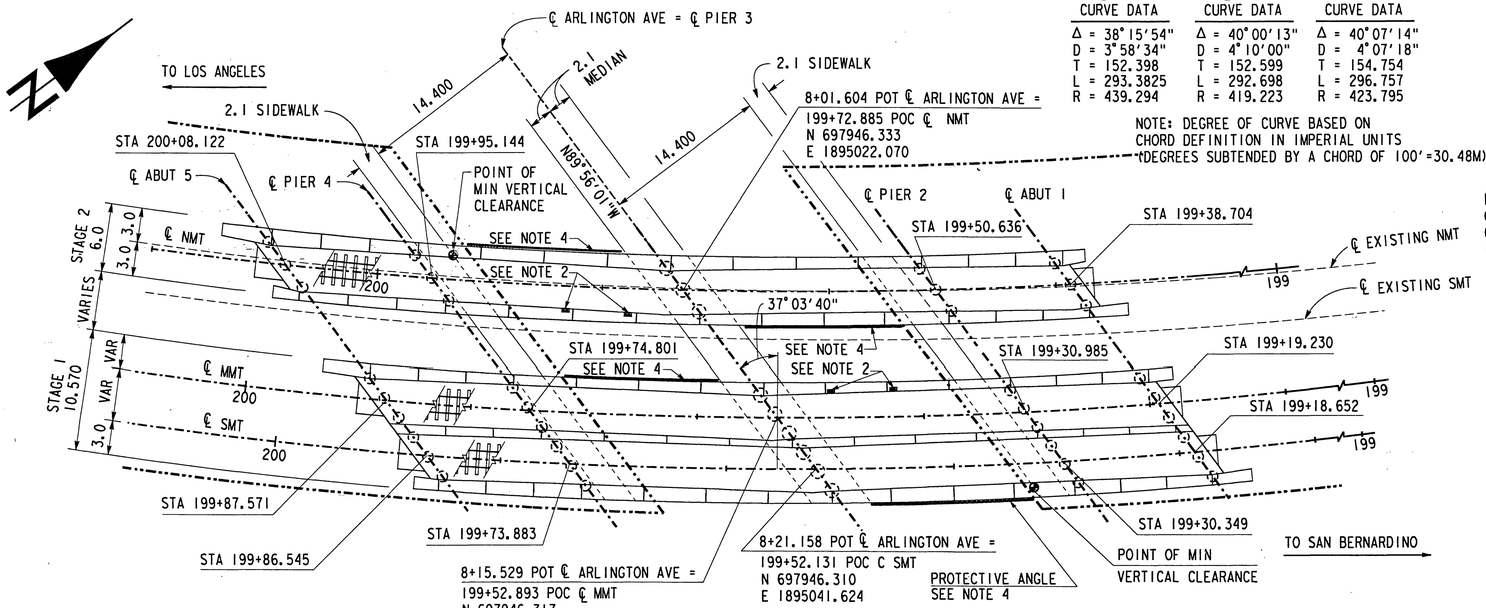

PLAN

1:250

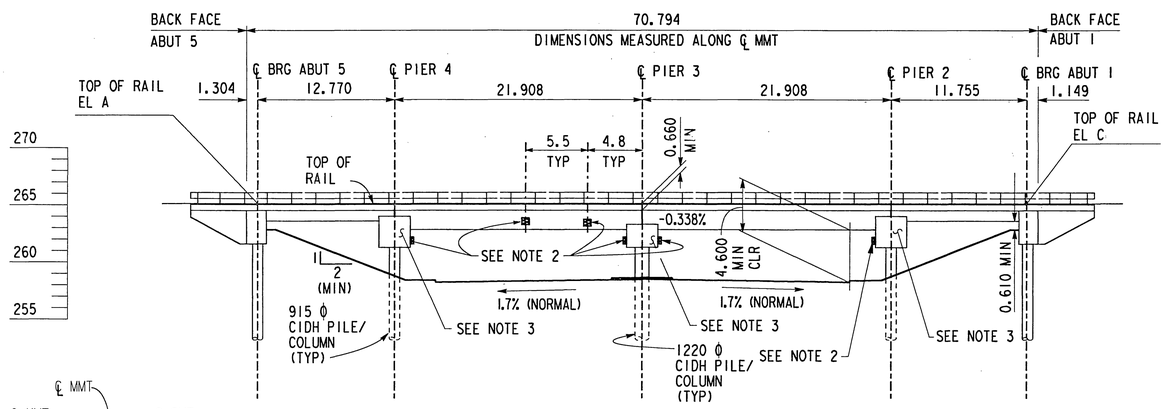

ELEVATION

1:250

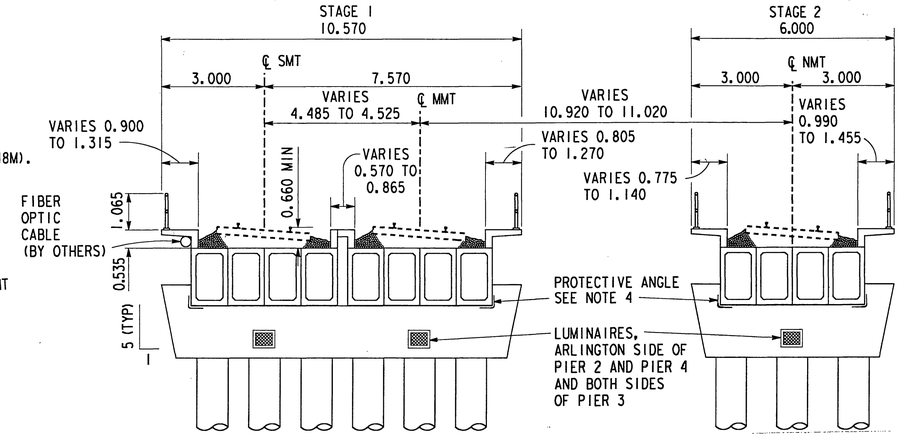

TYPICAL SECTION

NO SCALE

GENERAL NOTES:

1. DESIGN SPECIFICATIONS: AMERICAN RAILWAY ENGINEERING ASSOCIATION MANUAL FOR RAILWAY ENGINEERING 1996 EDITION.
2. SEISMIC DESIGN: BRIDGE DESIGN SPECIFICATIONS (1983 AASHTO WITH INTERIMS AND REVISIONS BY CALTRANS).
3. CONSTRUCTION SPECIFICATIONS: STANDARD SPECIFICATIONS OF THE CALIFORNIA DEPARTMENT OF TRANSPORTATION, DATED JULY 1995, AND STANDARD PLANS DATED JULY 1995.
4. SEISMIC LOADING: PEAK ROCK ACCELERATION = 0.40G
   DEPTH OF ALLUVIUM GREATER THAN 46 METERS.

   DESIGN LIVE LOADING: COOPER E-80 IMPACT: 35-L^2/500 (EXTERIOR SPANS)
   NOTE: "L" IS MEASURED IN FEET. 14+800/(L-2) (INTERIOR SPANS).
5. REINFORCED CONCRETE:
   f'c = 28 MPa, fc = 11 MPa, n = 8

   PRESTRESSED CONCRETE: SEE "PRESTRESSING NOTES" ON "PRESTRESSED CONCRETE GIRDER DETAILS" SHEET.
6. REINFORCEMENT: ALL REINFORCING BARS TO BE ASTM A-615M GRADE 420 DEFORMED TYPE. fs = 165 Mpa. DIMENSIONS ARE TO CENTER OF BARS UNLESS OTHERWISE SHOWN. BARS TO BE BENT ACCORDING TO THE MANUAL OF STANDARD PRACTICE, A.C.I. MINIMUM CLEARANCE SHALL BE 50 UNLESS OTHERWISE NOTED.
7. PIPE SHEAR KEYS SHALL BE ASTM A-36M, fy = 250 Mpa, fs = 165 Mpa.
8. FOUNDATIONS: ABUTMENTS AND PIERS TO BE SUPPORTED BY CAST-IN-DRILLED-HOLE CONCRETE PILES (DIAMETER PER PLAN) DRILLED TO LENGTH SHOWN ON PLANS.

TRACK ELEVATION TABLE

EL A		EL B		EL C	
STA	EL	STA	EL	STA	EL
199+86.545 SMT	265.306	199+52.131 SMT	265.190	199+18.652 SMT	265.077
199+87.571 MMT	265.309	199+52.893 MMT	265.192	199+19.230 MMT	265.078
200+08.122 NMT	265.379	199+72.885 NMT	265.260	199+38.704 NMT	265.144

INDEX TO PLANS

SHT NO.	TITLE	SHT NO.	TITLE
1	GENERAL PLAN AND ELEVATION	14	DECK PLAN AND DETAILS
2	FOUNDATION PLAN	15	SUPERSTRUCTURE DETAILS
3	ABUTMENT 1 LAYOUT	16	SUPERSTRUCTURE DETAILS 2
4	ABUTMENT 5 LAYOUT	17	SUPERSTRUCTURE DETAILS 3
5	ABUTMENT DETAILS	18	PRESTRESSED CONCRETE GIRDER DETAILS
6	PIER AND PILE DETAILS	19	HAND RAIL DETAILS
7	PIER AND PILE DETAILS 2	20	DRAINAGE PLAN AND DETAILS 1
8	PIER AND PILE DETAILS 3	21	DRAINAGE PLAN AND DETAILS 2
9	CONSTRUCTION LAYOUT 1	22	SLOPE PAVING DETAILS
10	CONSTRUCTION LAYOUT 2	23	MISCELLANEOUS DETAILS
11	PRECAST WALKWAY LAYOUT DETAILS 1		
12	PRECAST WALKWAY LAYOUT DETAILS 2		
13	PRECAST WALKWAY LAYOUT DETAILS 3		

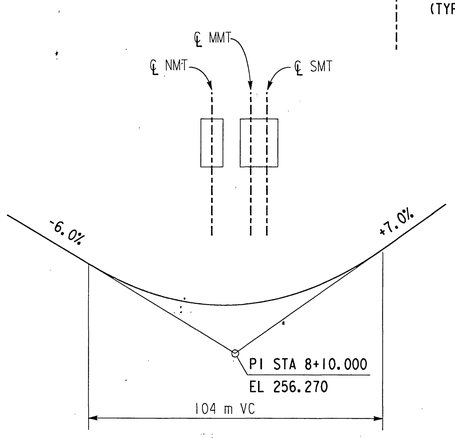

PROFILE GRADE ARLINGTON AVENUE

NO SCALE (LOOKING NORTH)

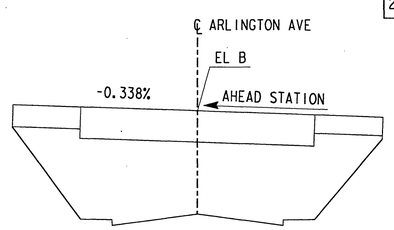

PROFILE GRADE PROPOSED TRACKS

NO SCALE

NOTES:

1. SEE "FOUNDATION PLAN" SHEET FOR ABBREVIATIONS, LIST OF STANDARD PLANS, AND SUMMARY OF APPROXIMATE QUANTITIES.
2. SURFACE MOUNTED LUMINAIRES.
3. FOR CITY OF RIVERSIDE 'MISSION' SYMBOL AT EACH END OF BENT CAPS. SEE MISCELLANEOUS DETAILS" SHEET.
4. INSTALL CONTINUOUS PROTECTIVE ANGLE ALONG EXTERIOR FACE OF GIRDERS G2(SPAN2), G15(SPAN 3), G18(SPAN 2) AND G23(SPAN 3). STOP PROTECTIVE ANGLE 2 METERS FROM EACH END OF GIRDER. FOR DETAILS SEE "SUPERSTRUCTURE DETAILS 1" SHEET" CONTINUOUS PROTECTIVE ANGLE DETAIL."

Approved:
K. H. Jennison
ASS'T. DIRECTOR STRUCTURES DESIGN
BURLINGTON NORTHERN SANTA FE RAILWAY
14 APRIL 1998

ALL DIMENSIONS ARE SHOWN IN METERS UNLESS NOTED OTHERWISE.

NOTE:
THE CONTRACTOR SHALL VERIFY ALL CONTROLLING FIELD DIMENSIONS BEFORE ORDERING OR FABRICATING ANY MATERIAL.

REGISTERED PROFESSIONAL ENGINEER — H. L. YEE — No. 54757 — Exp. 12/31/99 — CIVIL — STATE OF CALIFORNIA

REV	DESCRIPTION	DATE	BY
2	FINAL SUBMITTAL	2/24/98	HLY
1	100% SUBMITTAL	2/9/98	HLY

DESIGNED: H. YEE 5/97
DETAILS: G ZWIEP/D GASTON 5/97
CHECKED: I FAN/K SOYLAND 5/97
APPROVED BY: Richard McGrath, PUBLIC WORKS DIRECTOR
DATE 4-17-98

CITY OF RIVERSIDE, CALIFORNIA
MK CENTENNIAL
17300 REDHILL AVE, STE 150
IRVINE, CALIFORNIA 92614

ARLINGTON AVENUE UNDERPASS

AT AT&SF RAILROAD CROSSING

BN&SF BRIDGE NO 12.4, LS #7602

GENERAL PLAN AND TYPICAL SECTION

ACCOUNT NUMBER R-3425-B

SHEET 1 OF 23

FILE: m:\1749\struct\aup_gp.dgn
PLOT TIME: 17:29:21

FOR REDUCED PLANS ORIGINAL SCALE IS IN MILLIMETERS 0 20 40 60 80 100

INDEXED 9-12-2000 4H

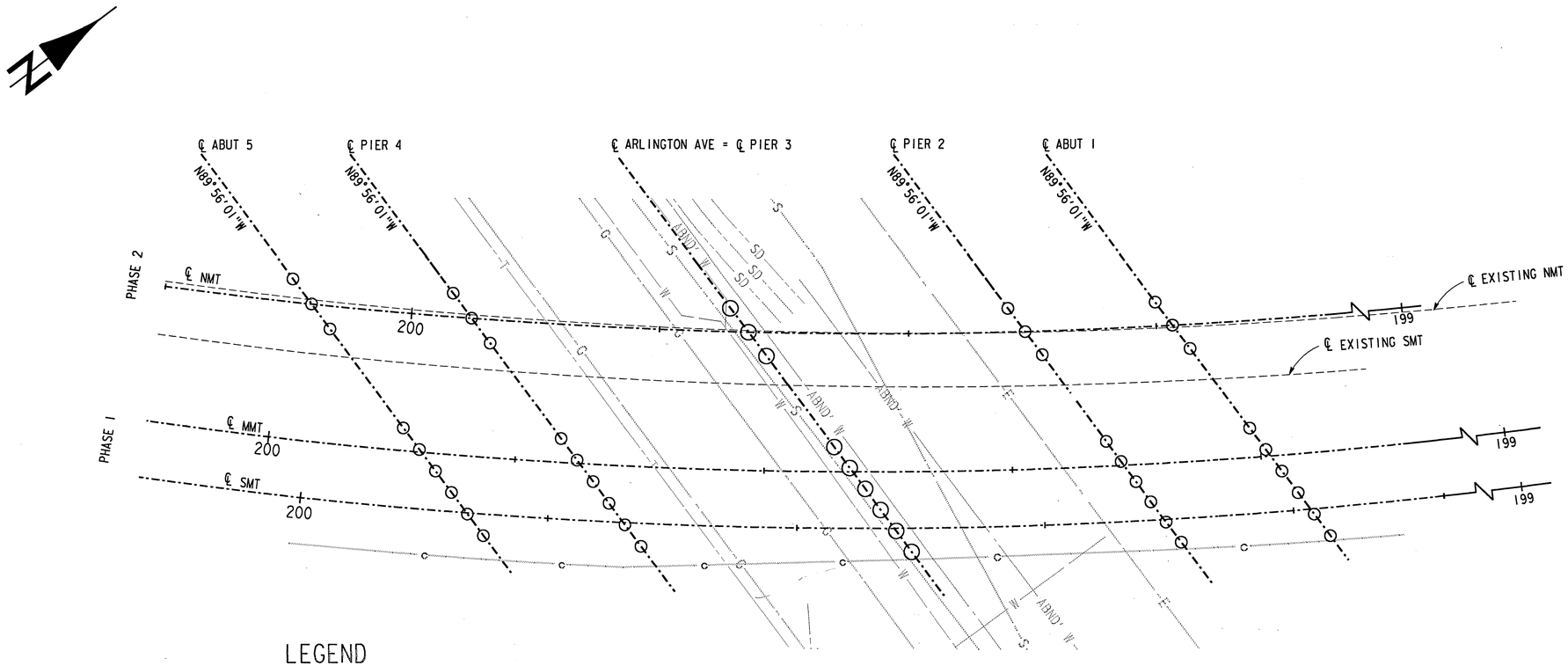

PLAN

1:200

LEGEND

—— ABND'W ——	ABANDONED WATER
——— C ———	EXISTING FIBER OPTIC
——— G ———	EXISTING GAS
——— S ———	EXISTING SEWER
——— T ———	EXISTING TELEPHONE
——— W ———	EXISTING WATER
○	PROPOSED PILES

PILE LOCATION

	CONTROL LINE "SMT"		CONTROL LINE "NMT"	
	STATION	OFF	STATION	OFF
ABUT 1				
1	199+23.020	6835 RT	199+40.000	1925 RT
2	199+21.845	5025 RT	199+38.705	5 RT
3	199+20.680	3210 RT	199+37.425	1920 LT
4	199+19.530	1390 RT		
5	199+18.385	430 LT		
6	199+17.250	2255 LT		
PIER 2				
1	199+34.740	6475 RT	199+51.985	1890 RT
2	199+33.595	4810 RT	199+50.640	5 RT
3	199+32.460	3140 RT	199+49.305	1885 LT
4	199+31.330	1465 RT		
5	199+30.210	210 LT		
6	199+29.100	1890 LT		
PIER 3				
1	199+57.035	6475 RT	199+74.383	1865 RT
2	199+55.755	4810 RT	199+72.895	5 LT
3	199+54.485	3140 RT	199+71.425	1880 LT
4	199+53.225	1466 RT		
5	199+51.975	210 LT		
6	199+50.735	1892 LT		
PIER 4				
1	199+79.295	6425 RT	199+96.795	1880 RT
2	199+77.890	4780 RT	199+95.150	10 RT
3	199+76.495	3135 RT	199+93.520	1870 LT
4	199+75.110	1481 RT		
5	199+73.735	175 LT		
6	199+72.375	1840 LT		
ABUT 5				
1	199+92.215	6330 RT	200+09.845	1845 RT
2	199+90.760	4730 RT	200+08.135	15 RT
3	199+89.320	3125 RT	200+06.440	1820 LT
4	199+87.880	1515 RT		
5	199+86.460	100 LT		
6	199+85.045	1720 LT		

PAY CODE ITEM QUANTITY

-F-	STRUCTURE EXCAVATION (BRIDGE)	198 M3
-F-	STRUCTURE BACKFILL (BRIDGE)	85 M3
- -S	915 MM CAST-IN-DRILLED-HOLE CONCRETE PILING	383 M
- -S	1220 MM CAST-IN-DRILLED-HOLE CONCRETE PILING	122 M
-F-	STRUCTURAL CONCRETE (BRIDGE)	598 M3
- -S	APPLY ANTI-GRAFFITI COATING	312 M2
P- -	FURNISH PRECAST CONCRETE GIRDER (10 M -15 M)	24 EA
P- -	FURNISH PRECAST CONCRETE GIRDER (20 M - 25 M)	24 EA
- -S	ERECT PRECAST CONCRETE GIRDER	48 EA
P-F-S	BAR REINFORCING STEEL (BRIDGE)	144,891 KG
-F-S	WATERPROOFING AND COVER	957 M2
-F-S	DAMPPROOFING	160 M2
P-F-S	MISCELLANEOUS METAL (RESTRAINER-PIPE TYPE)	5,043 KG
P-F-S	MISCELLANEOUS METAL (BRIDGE)	49,926 KG
P-F-S	PIPE HANDRAILING	302 M
P-F-S	SLOPE PAVING	515 M2
-F-S	BRIDGE DRAINAGE SYSTEM	1 LS

STANDARD PLANS DATED JULY, 1995

A10A	ABBREVIATIONS
A10B	SYMBOLS
A62C	LIMITS OF PAYMENT FOR EXCAVATION AND BACKFILL BRIDGE
B6-21	JOINT SEALS

ADDITIONAL ABBREVIATIONS

BRG	BEARING
EL	ELEVATION
EXT	EXTERNAL
INT	INTERNAL
MMT	MIDDLE MAIN TRACK
NMT	NORTH MAIN TRACK
SMT	SOUTH MAIN TRACK
SPA	SPACES, SPACING
PERF	PERFORATED

NOTE:
THE CONTRACTOR SHALL VERIFY ALL CONTROLLING FIELD DIMENSIONS BEFORE ORDERING OR FABRICATING ANY MATERIAL.

REGISTERED PROFESSIONAL ENGINEER
H. YEE
No. 54757
Exp. 12/31/99
CIVIL
STATE OF CALIFORNIA

ALL DIMENSIONS ARE SHOWN IN MILLIMETERS UNLESS NOTED OTHERWISE.

REV	DESCRIPTION	DATE	BY
2	FINAL SUBMITTAL	2/24/98	HLY
1	100% SUBMITTAL	2/9/98	HLY

CITY OF RIVERSIDE, CALIFORNIA
MK CENTENNIAL
17300 REDHILL AVE, STE 150
IRVINE, CALIFORNIA 92614

DESIGNED: H. YEE 5/97
DETAILS: G ZWIEP/D GASTON 5/97
CHECKED: K SOYLAND 5/97
APPROVED BY: Richard M. Grant, PUBLIC WORKS DIRECTOR
DATE 4-17-98

ARLINGTON AVENUE UNDERPASS

AT AT&SF RAILROAD CROSSING

BN&SF BRIDGE NO 12.4, LS #7602

FOUNDATION PLAN

ACCOUNT NUMBER
R-3425-B

SHEET 2 OF 23

FOR REDUCED PLANS ORIGINAL SCALE IS IN MILLIMETERS 0 20 40 60 80 100

INDEXED 9-12-2000 HH

FILE: m:\1749\struct\oup_f.dgn
PLOT TIME: 18:31:14

NOTES

1. FOR ADDITIONAL REINFORCEMENT INFORMATION, SEE "ABUTMENT DETAILS" SHEET.
2. CONSTRUCT APPROACH PEDESTAL AND BACKWALL AFTER PLACEMENT OF GIRDERS.
3. SEE "MISCELLANEOUS DETAILS" SHEET FOR ABUTMENT DRAINAGE DETAILS.

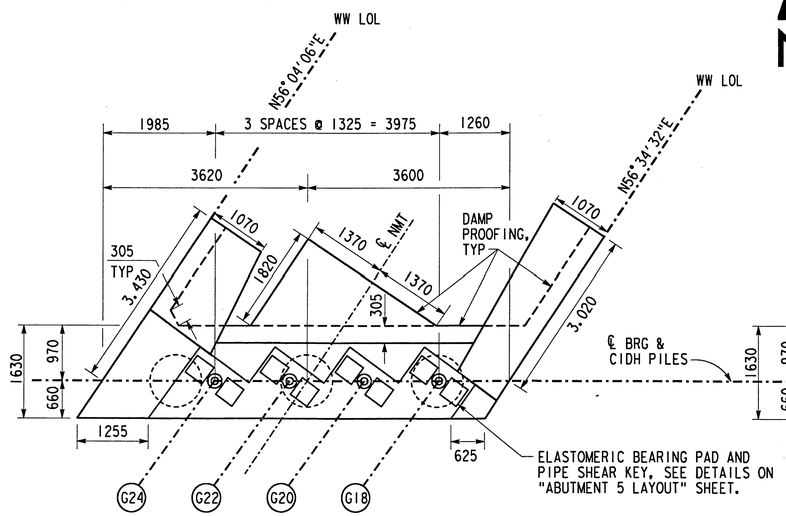

PLAN
1:50

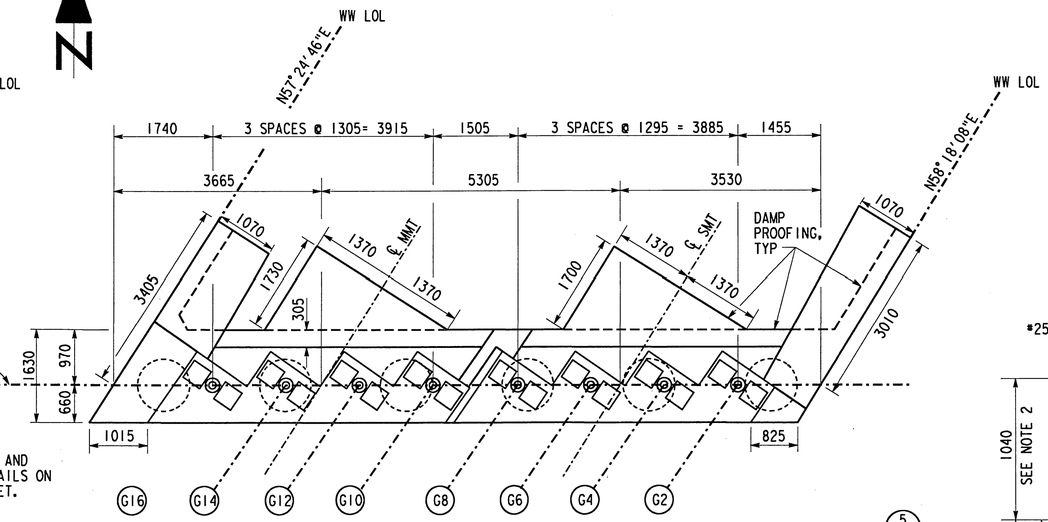

PLAN
1:50

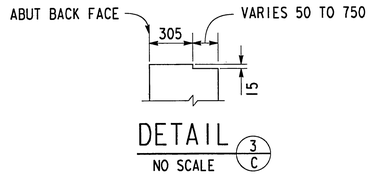

DETAIL 3/C
NO SCALE

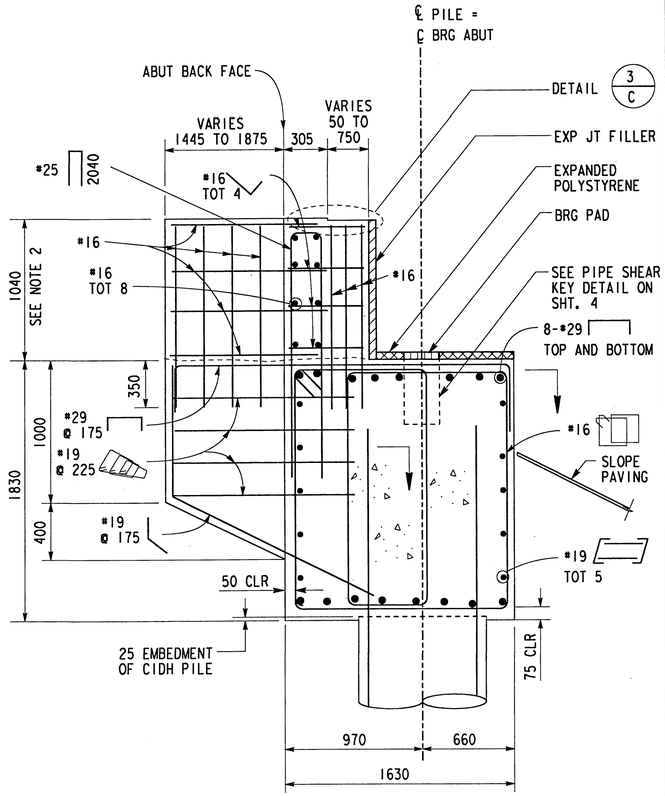

SECTION 3/A
1:20

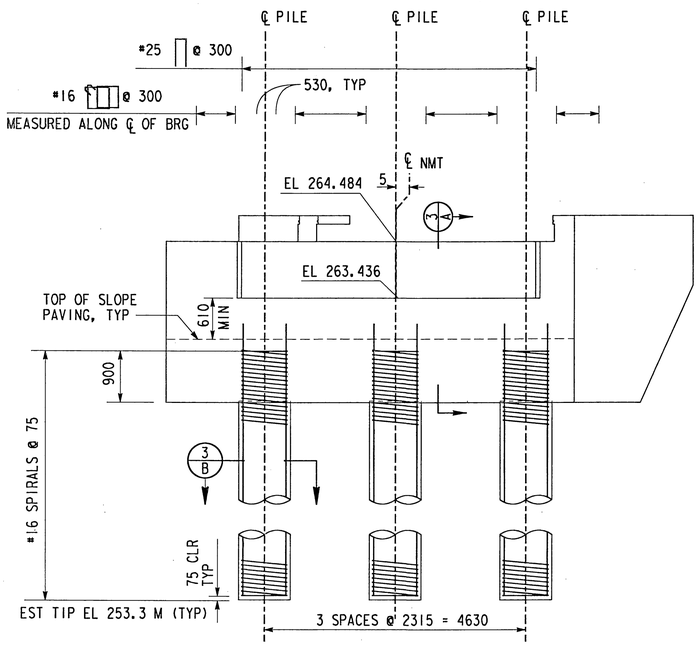

ELEVATION
1:50

ABUTMENT 1 STAGE 2

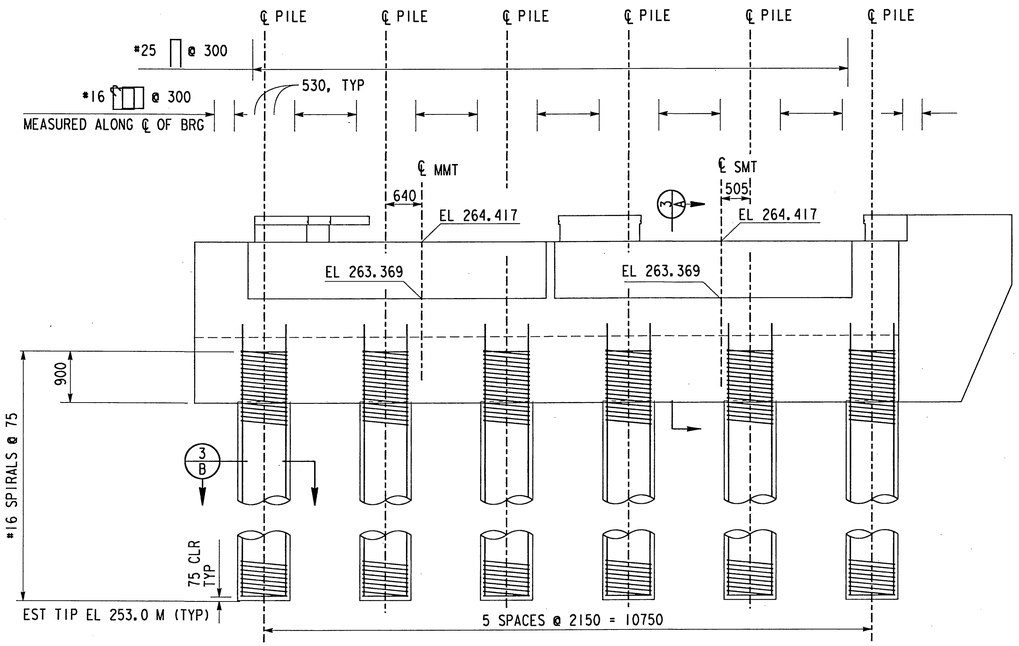

ELEVATION
1:50

ABUTMENT 1 STAGE 1

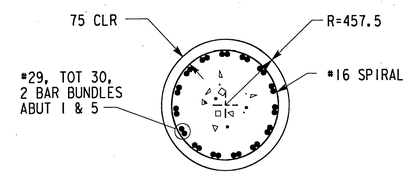

SECTION 3/B
1:20

CROSS REFERENCE DRAWING NUMBER
SECTION OR DETAIL IDENTIFICATION

NOTE:
THE CONTRACTOR SHALL VERIFY ALL CONTROLLING FIELD DIMENSIONS BEFORE ORDERING OR FABRICATING ANY MATERIAL.

REGISTERED PROFESSIONAL ENGINEER
H. YEE
No. 34757
Exp. 12/31/99
CIVIL
STATE OF CALIFORNIA

ALL DIMENSIONS ARE SHOWN IN MILLIMETERS UNLESS NOTED OTHERWISE.

REV	DESCRIPTION	DATE	BY
2	FINAL SUBMITTAL	2/24/98	HLY
1	100% SUBMITTAL	2/9/98	HLY

DESIGNED: H. YEE 5/97
DETAILS: G ZWIEP/D GASTON 5/97
CHECKED: K FLECK/K SOYLAND 5/97
APPROVED BY: Richard M. Gratt, PUBLIC WORKS DIRECTOR
DATE 4-17-98

CITY OF RIVERSIDE, CALIFORNIA
MK CENTENNIAL
17300 REDHILL AVE. STE 150
IRVINE, CALIFORNIA 92614

ARLINGTON AVENUE UNDERPASS
AT AT&SF RAILROAD CROSSING
BN&SF BRIDGE NO 12.4, LS #7602
ABUTMENT 1 LAYOUT

ACCOUNT NUMBER
R-3425-B
SHEET 3 OF 23

FILE: m:\1749\structure\aup_a1.dgn
PLOT TIME: 17:36:22

FOR REDUCED PLANS ORIGINAL SCALE IS IN MILLIMETERS 0 20 40 60 80 100

INDEXED 9-12-2000 LH

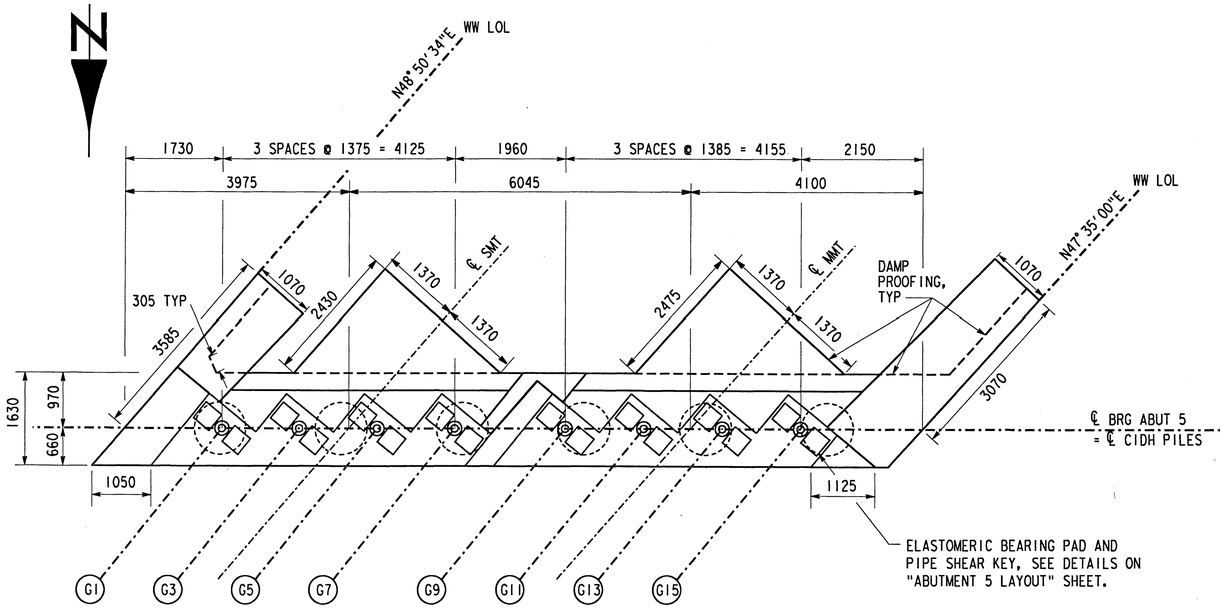

PLAN
1:50

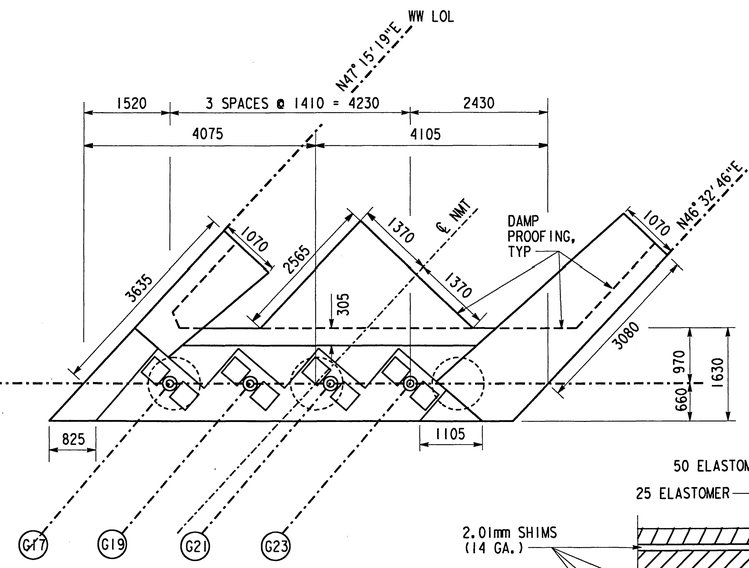

PLAN
1:50

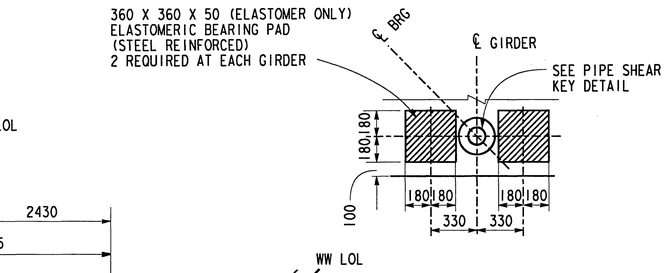

BEARING PAD DETAIL

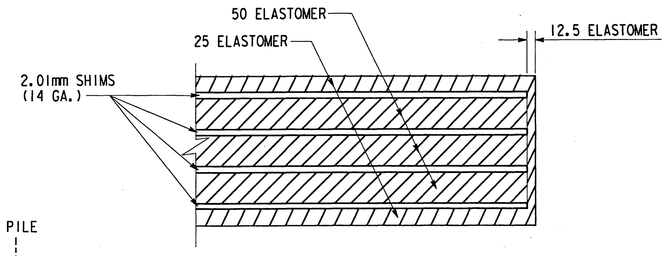

LAMINATED PAD DETAIL
NTS

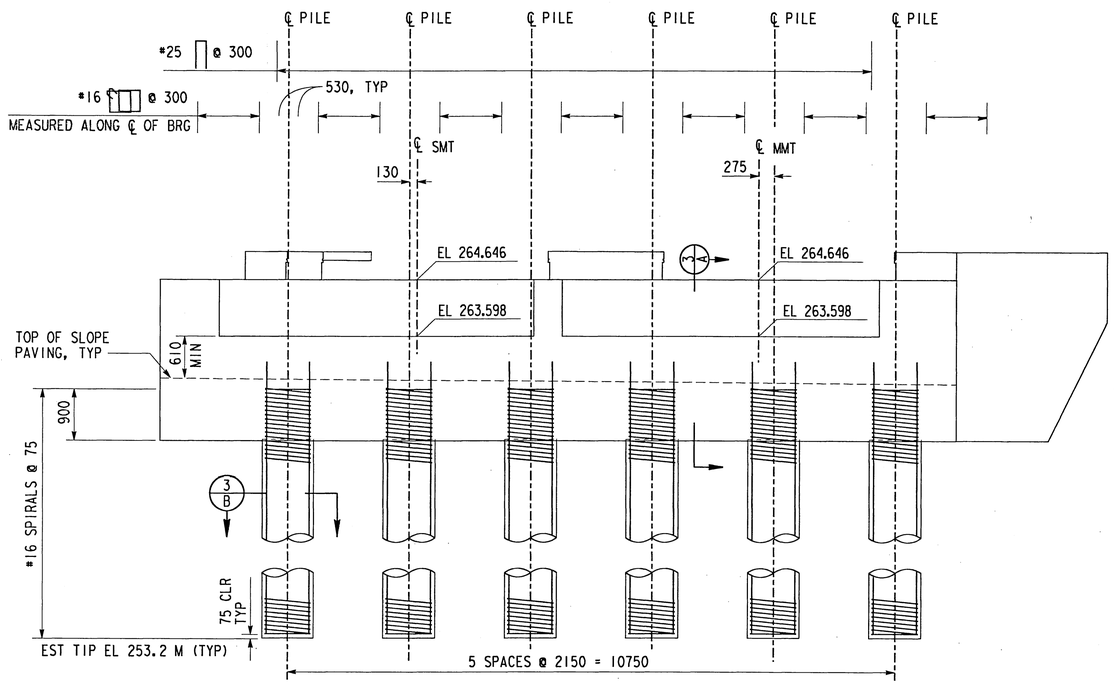

ELEVATION
1:50

ABUTMENT 5 STAGE 1

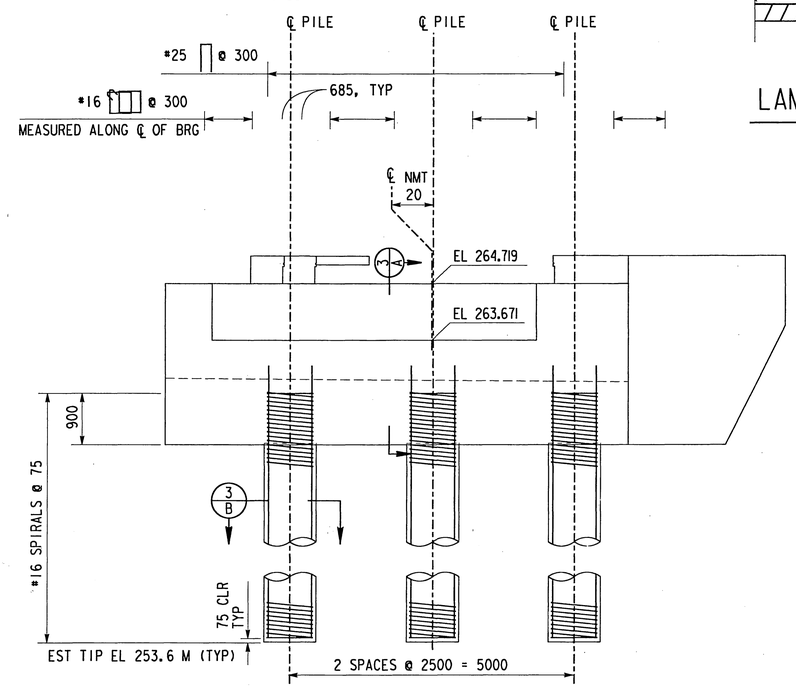

ELEVATION
1:50

ABUTMENT 5 STAGE 2

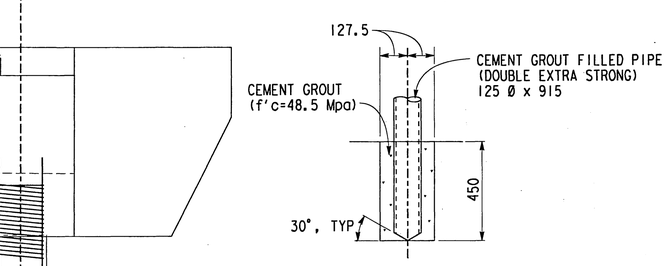

PIPE SHEAR KEY DETAIL

ALL DIMENSIONS ARE SHOWN IN MILLIMETERS UNLESS NOTED OTHERWISE.

NOTE:
THE CONTRACTOR SHALL VERIFY ALL CONTROLLING FIELD DIMENSIONS BEFORE ORDERING OR FABRICATING ANY MATERIAL.

REGISTERED PROFESSIONAL ENGINEER — H. YEE — No. 54757 — Exp. 12/31/99 — CIVIL — STATE OF CALIFORNIA

REV	DESCRIPTION	DATE	BY
2	FINAL SUBMITTAL	2/24/98	HLY
1	100% SUBMITTAL	2/9/98	HLY

DESIGNED: H. YEE 5/97
DETAILS: G ZWIEP/D GASTON 5/97
CHECKED: K FLECK/K SOYLAND 5/97
APPROVED BY: Richard M. Scott, PUBLIC WORKS DIRECTOR
DATE 4-17-98

CITY OF RIVERSIDE, CALIFORNIA
MK CENTENNIAL
17300 REDHILL AVE, STE 150
IRVINE, CALIFORNIA 92614

ARLINGTON AVENUE UNDERPASS
AT AT&SF RAILROAD CROSSING
BN&SF BRIDGE NO 12.4, LS #7602
ABUTMENT 5 LAYOUT

ACCOUNT NUMBER
R-3425-B
SHEET 4 OF 23

FOR REDUCED PLANS ORIGINAL SCALE IS IN MILLIMETERS 0 20 40 60 80 100

INDEXED 9-12-2000 GH

FILE: m:\1749\struct\oup_a2.dgn
PLOT TIME: 17:21:00

NOTE:

1. OMIT STIRRUPS AT PILE REINFORCING AND REPLACE WITH VERTICAL SIDE FACE BARS WITH HOOKS TOP AND BOTTOM ALONG WITH HORIZONTAL BARS ACROSS THE TOP OF THE CAP ALSO WITH HOOKS AT BOTH ENDS.

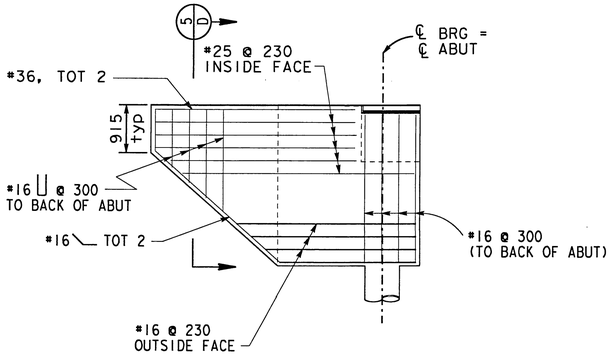

WINGWALL ELEVATION

1:50

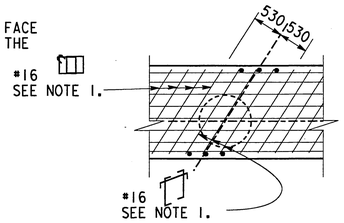

DETAIL AT COLUMNS

1:50

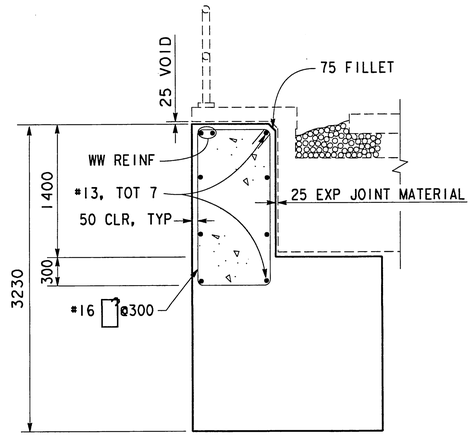

SECTION 5/A

1:30

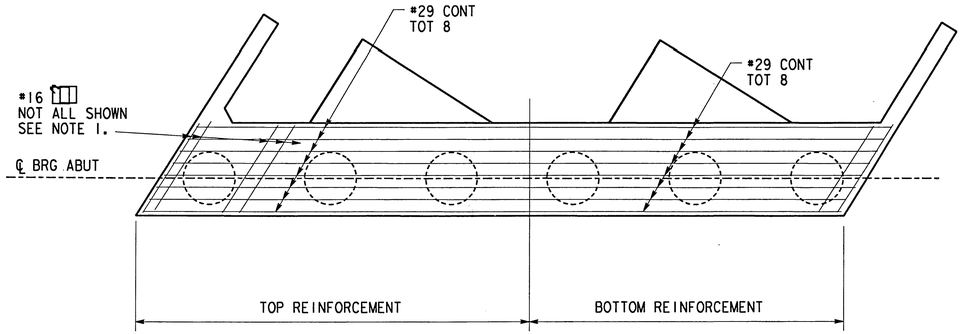

MAIN ABUTMENT REINFORCEMENT PLAN 3/E

1:50

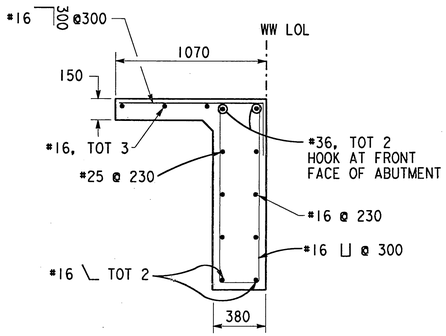

SECTION 5/D

1:20

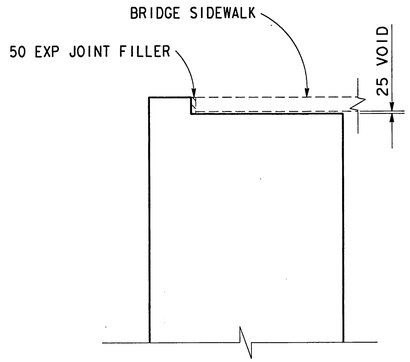

SECTION 5/B

1:30

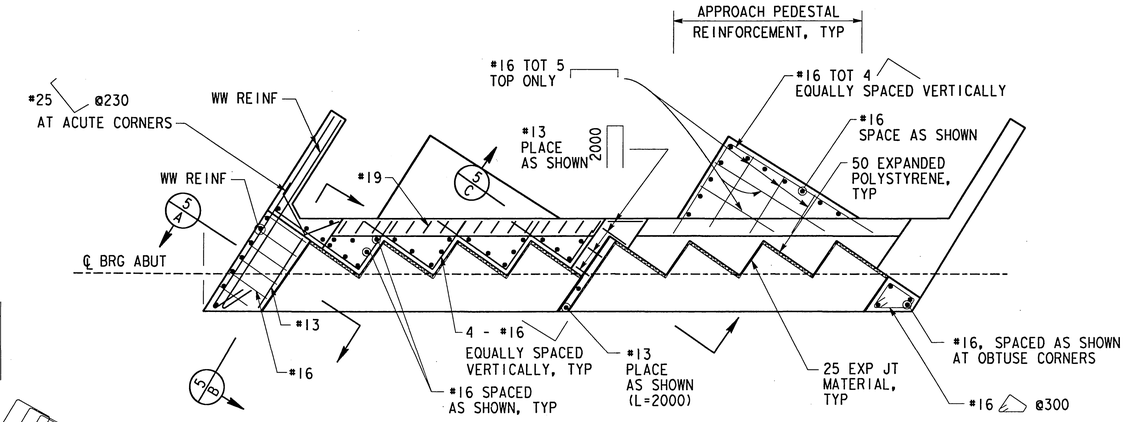

ADDITIONAL ABUTMENT REINFORCEMENT PLAN

NOT ALL REINF SHOWN FOR CLARITY
ALL ABUTMENTS SIMILAR
1:50

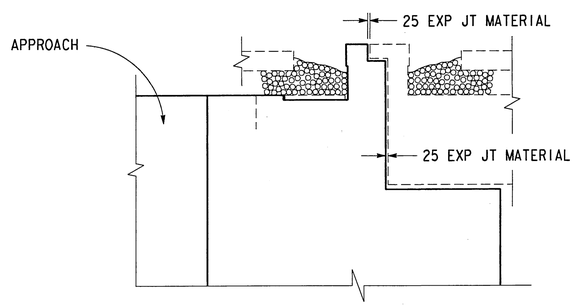

SECTION 5/C

1:30

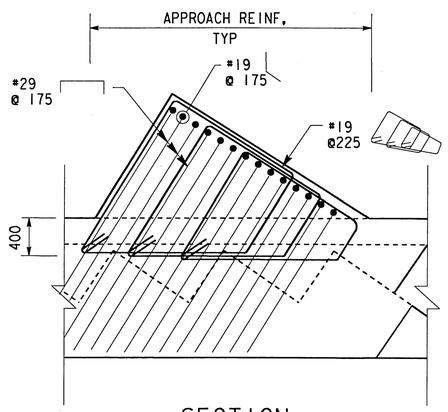

SECTION 3/F

NO SCALE
NOT ALL REINF SHOWN FOR CLARITY
ALL ABUTMENTS SIMILAR

ABUTMENT DETAILS

ABUTMENT 1 STAGE 1 SHOWN; ALL OTHERS SIMILAR.

ALL DIMENSIONS ARE SHOWN IN MILLIMETERS UNLESS NOTED OTHERWISE.

NOTE:
THE CONTRACTOR SHALL VERIFY ALL CONTROLLING FIELD DIMENSIONS BEFORE ORDERING OR FABRICATING ANY MATERIAL.

REV	DESCRIPTION	DATE	BY
2	FINAL SUBMITTAL	2/24/98	HLY
1	100% SUBMITTAL	2/9/98	HLY

DESIGNED: H. YEE 5/97
DETAILS: G ZWIEP/D GASTON 5/97
CHECKED: K FLECK/K SOYLAND 5/97
APPROVED BY: Richard McBrett, PUBLIC WORKS DIRECTOR
DATE 4-17-98

CITY OF RIVERSIDE, CALIFORNIA
MK CENTENNIAL
17300 REDHILL AVE, STE 150
IRVINE, CALIFORNIA 92614

ARLINGTON AVENUE UNDERPASS
AT AT&SF RAILROAD CROSSING
BN&SF BRIDGE NO 12.4, LS #7602
ABUTMENT DETAILS

ACCOUNT NUMBER
R-3425-B
SHEET 5 OF 23

FILE: m:\1749\structure\oup_a3.dgn
PLOT TIME: 17:27:14

FOR REDUCED PLANS ORIGINAL
0 20 40 60 80 100

INDEXED 9-12-2000 LH

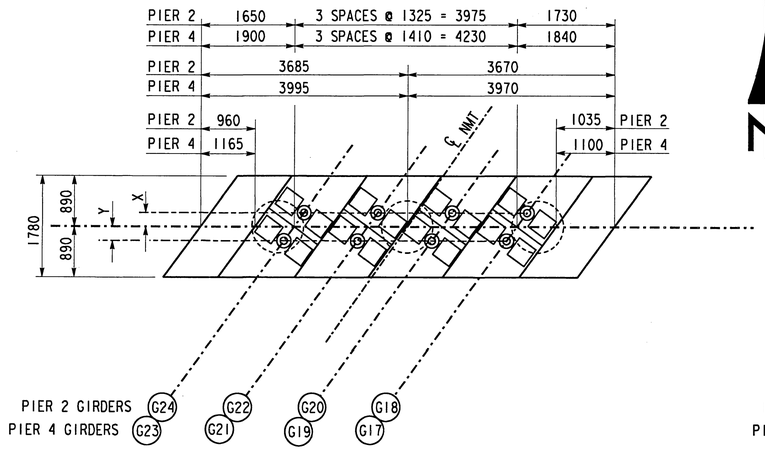

PLAN
1:50

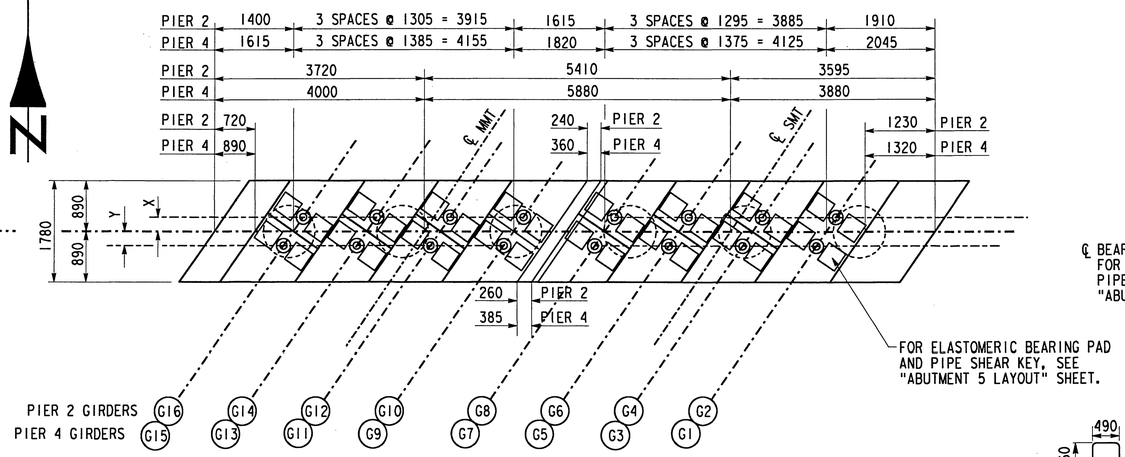

PLAN
1:50

	PIER 2			PIER 4		
	NMT	MMT	SMT	NMT	MMT	SMT
X	246	252	252	230	236	237
Y	246	249	252	233	235	237

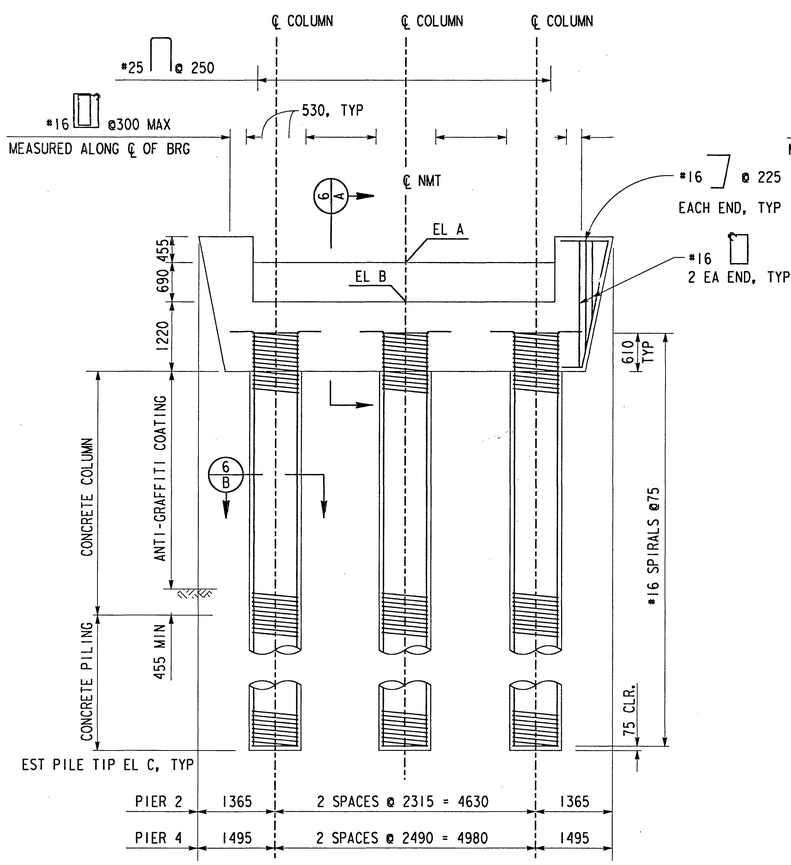

ELEVATION
1:50

PIERS 2 & 4, STAGE 2

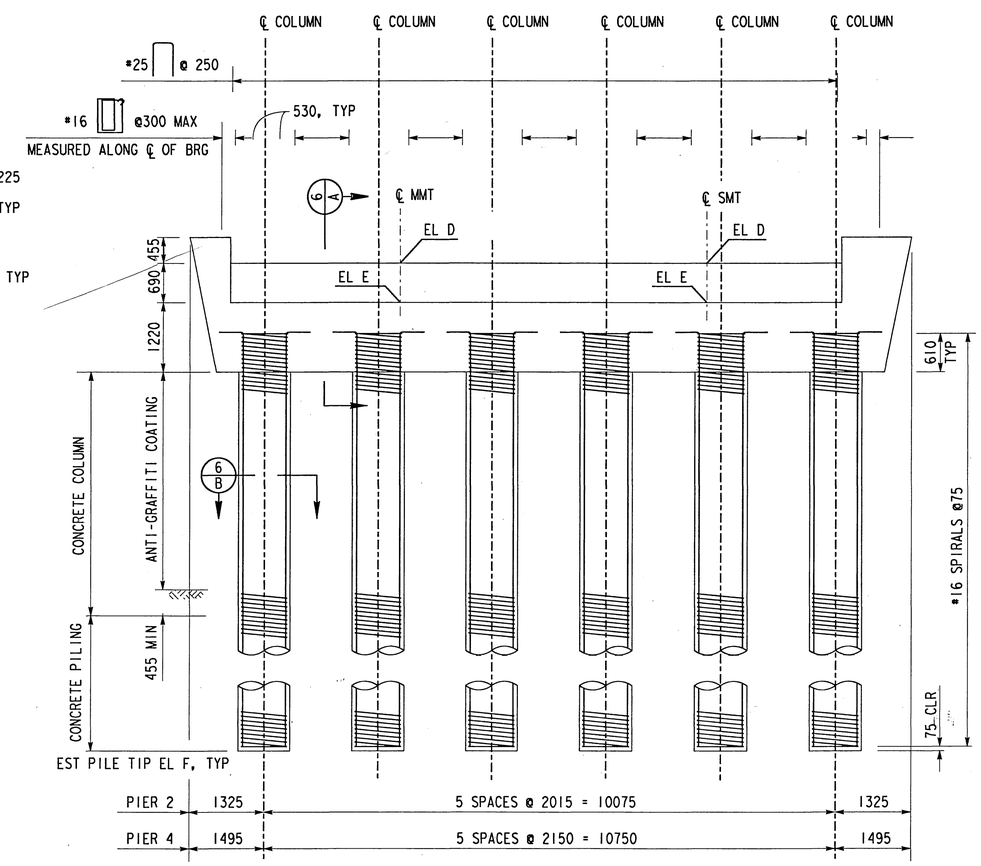

ELEVATION
1:50

PIERS 2 & 4, STAGE 1

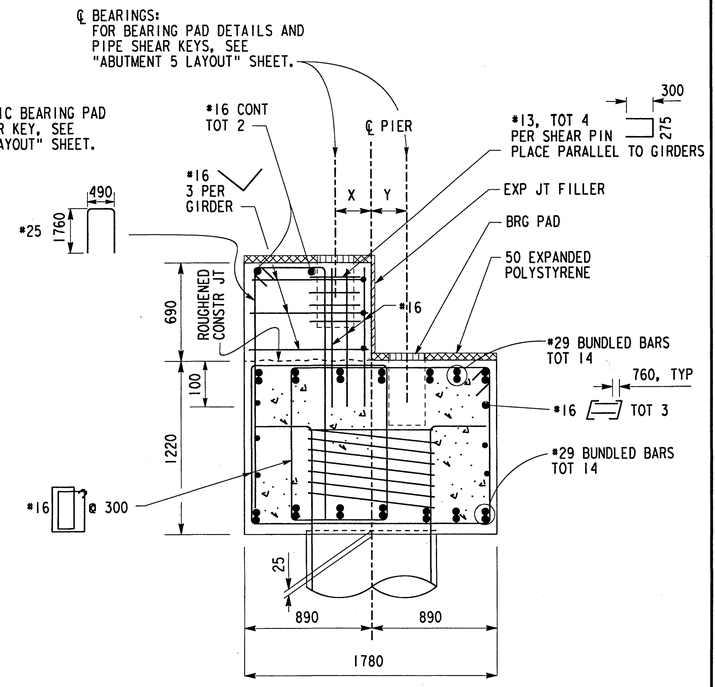

SECTION 6/A
1:20

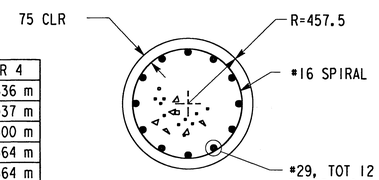

SECTION 6/B
1:20

EL	PIER 2	PIER 4
A	263.484 m	263.636 m
B	262.788 m	262.937 m
C	244.900 m	245.300 m
D	263.415 m	263.564 m
E	262.719 m	262.864 m
F	244.500 m	244.600 m

NOTES

1. ALL COLUMNS ON THIS SHEET SIMILAR.
2. FOR ADDITIVE REINFORCEMENT DETAIL, SEE "PIER AND PILE DETAILS 3" SHEET.

NOTE:
THE CONTRACTOR SHALL VERIFY ALL CONTROLLING FIELD DIMENSIONS BEFORE ORDERING OR FABRICATING ANY MATERIAL.

ALL DIMENSIONS ARE SHOWN IN MILLIMETERS UNLESS NOTED OTHERWISE.

REGISTERED PROFESSIONAL ENGINEER H. L. YEE No. 54757 Exp. 12/31/99 CIVIL STATE OF CALIFORNIA

REV	DESCRIPTION	DATE	BY
2	FINAL SUBMITTAL	2/24/98	HLY
1	100% SUBMITTAL	2/9/98	HLY

DESIGNED: H. YEE 5/97
DETAILS: G ZWIEP/D GASTON 5/97
CHECKED: K FLECK/K SOYLAND 5/97
APPROVED BY: Richard M. Scott, PUBLIC WORKS DIRECTOR
DATE 4-17-98

CITY OF RIVERSIDE, CALIFORNIA
MK CENTENNIAL
17300 REDHILL AVE. STE 150
IRVINE, CALIFORNIA 92614

ARLINGTON AVENUE UNDERPASS
AT AT&SF RAILROAD CROSSING
BN&SF BRIDGE NO 12.4, LS #7602
PIER AND PILE DETAILS

ACCOUNT NUMBER
R-3425-B
SHEET 6 OF 23

FOR REDUCED PLANS ORIGINAL SCALE IS IN MILLIMETERS 0 20 40 60 80 100

FILE:m:\1749\struct\oup_pi.dgn
PLOT TIME: 17:45:42

INDEXED 9-12-2000 GH

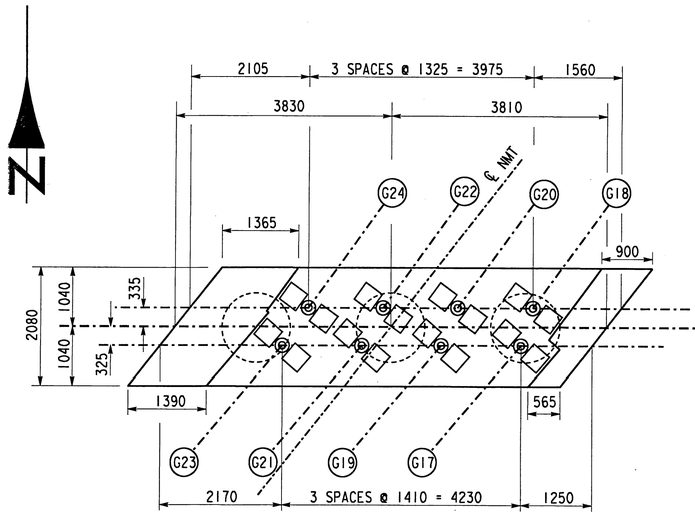

PLAN
1:50

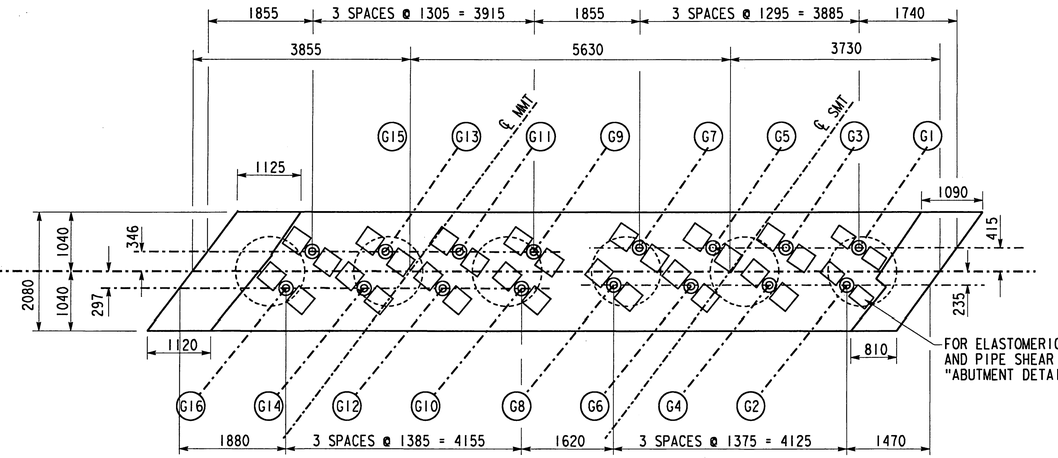

FOR ELASTOMERIC BEARING PAD AND PIPE SHEAR KEY, SEE "ABUTMENT DETAILS" SHEET.

PLAN
1:50

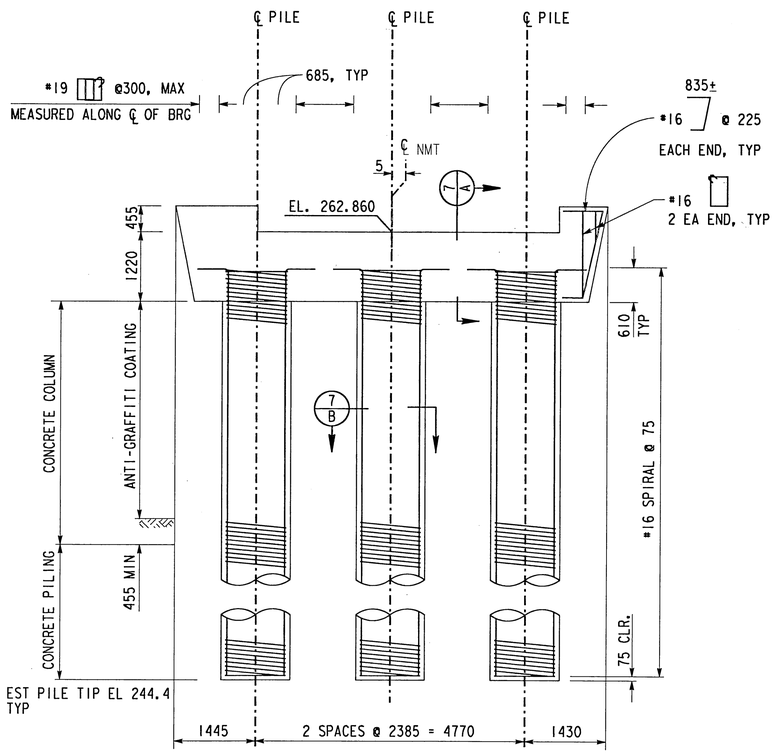

ELEVATION
1:50

PIER 3, STAGE 2

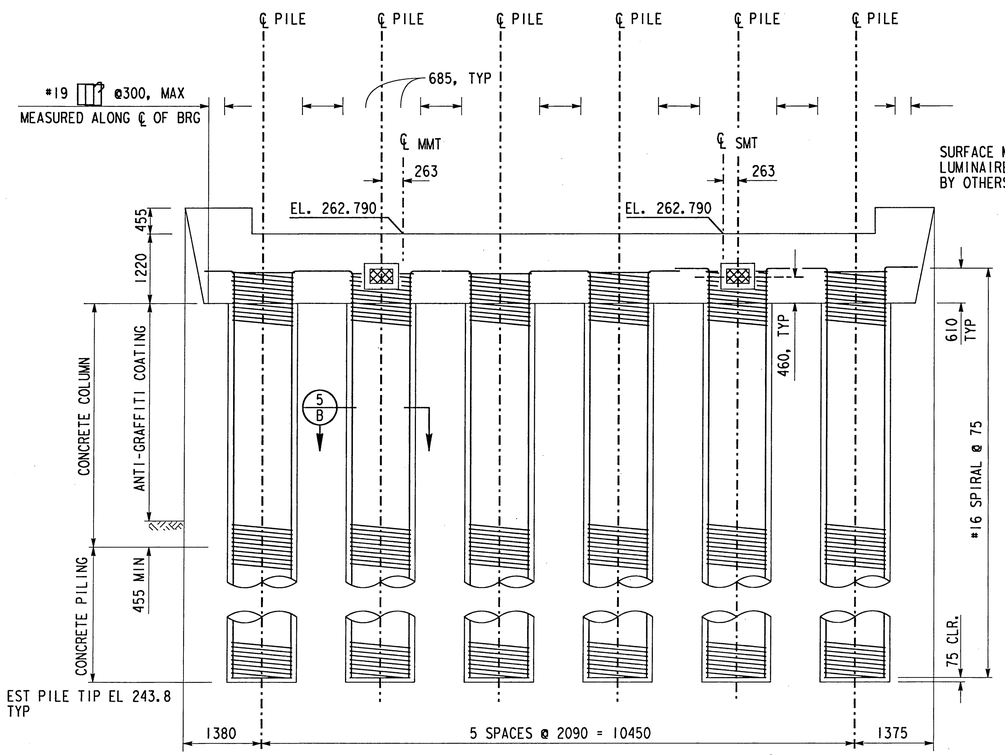

ELEVATION
1:50

PIER 3, STAGE 1

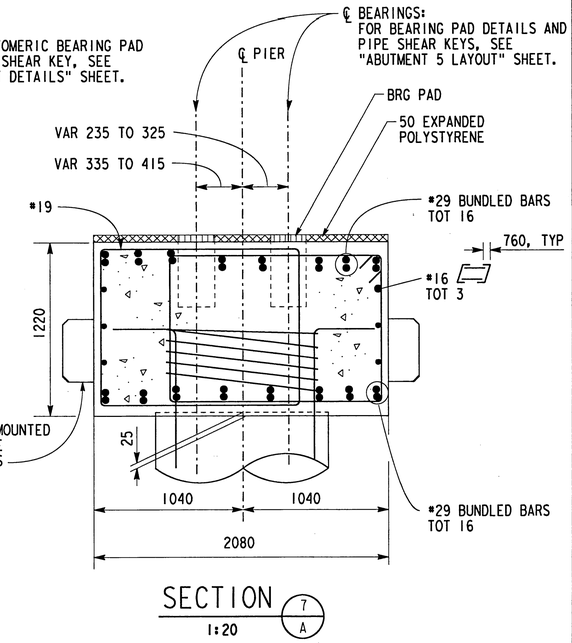

SECTION 7/A
1:20

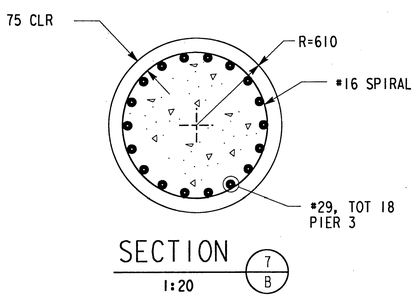

SECTION 7/B
1:20

ALL DIMENSIONS ARE SHOWN IN MILLIMETERS UNLESS NOTED OTHERWISE.

NOTE:
THE CONTRACTOR SHALL VERIFY ALL CONTROLLING FIELD DIMENSIONS BEFORE ORDERING OR FABRICATING ANY MATERIAL.

REGISTERED PROFESSIONAL ENGINEER
H L YEE
No. 54757
Exp. 12/31/99
CIVIL
STATE OF CALIFORNIA

REV	DESCRIPTION	DATE	BY
2	FINAL SUBMITTAL	2/24/98	HLY
1	100% SUBMITTAL	2/9/98	HLY

DESIGNED: H. YEE 5/97
DETAILED: G ZWIEP/D GASTON 5/97
CHECKED: K FLECK/K SOYLAND 5/97
APPROVED BY: Richard McGrath, PUBLIC WORKS DIRECTOR
DATE 4-17-98

CITY OF RIVERSIDE, CALIFORNIA
MK CENTENNIAL
17300 REDHILL AVE. STE 150
IRVINE, CALIFORNIA 92614

ARLINGTON AVENUE UNDERPASS
AT AT&SF RAILROAD CROSSING
BN&SF BRIDGE NO 12.4, LS #7602
PIER AND PILE DETAILS 2

ACCOUNT NUMBER
R-3425-B
SHEET 7 OF 23

FILE: m\1749\struct\aup_p2.dgn
PLOT TIME: 18:54:37

FOR REDUCED PLANS ORIGINAL SCALE IS IN MILLIMETERS 0 20 40 60 80 100

INDEXED 9-12-2000 HT

NOTE:

1. OMIT STIRRUPS AT PILE REINFORCING AND REPLACE WITH VERTICAL SIDE FACE AND HORIZONTAL BARS. SEE DETAIL AT COLUMNS.

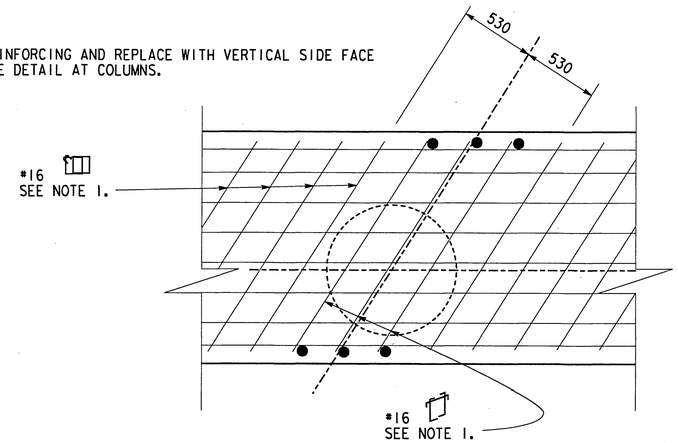

DETAIL AT COLUMNS

PIER 2,4
1:50

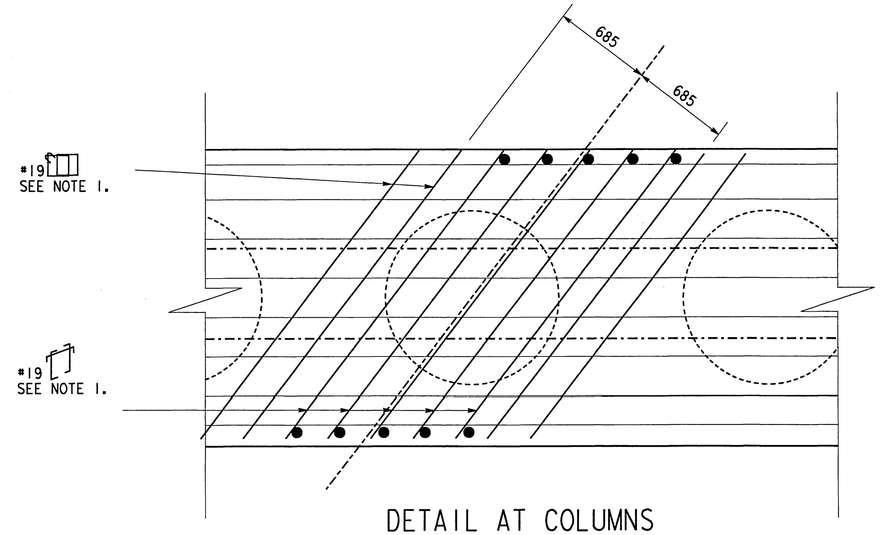

DETAIL AT COLUMNS

PIER 3
1:50

BUNDLED BARS SHOWN THUS ⊂⊃.

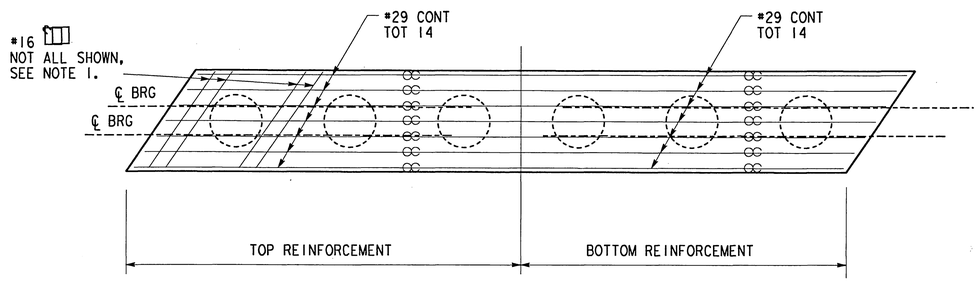

PIER 2 & 4 MAIN REINFORCEMENT PLAN

1:50

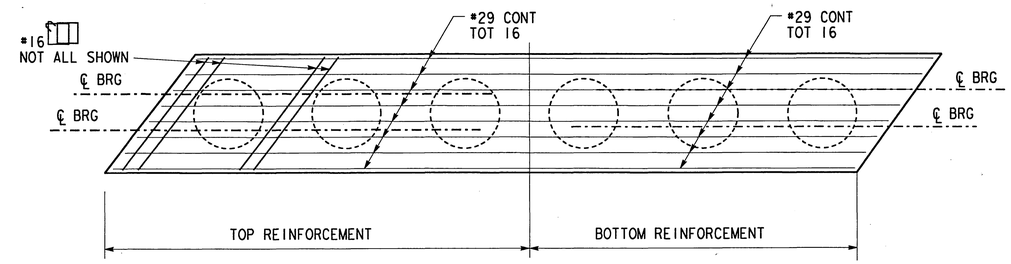

PIER 3 MAIN REINFORCEMENT PLAN

1:50

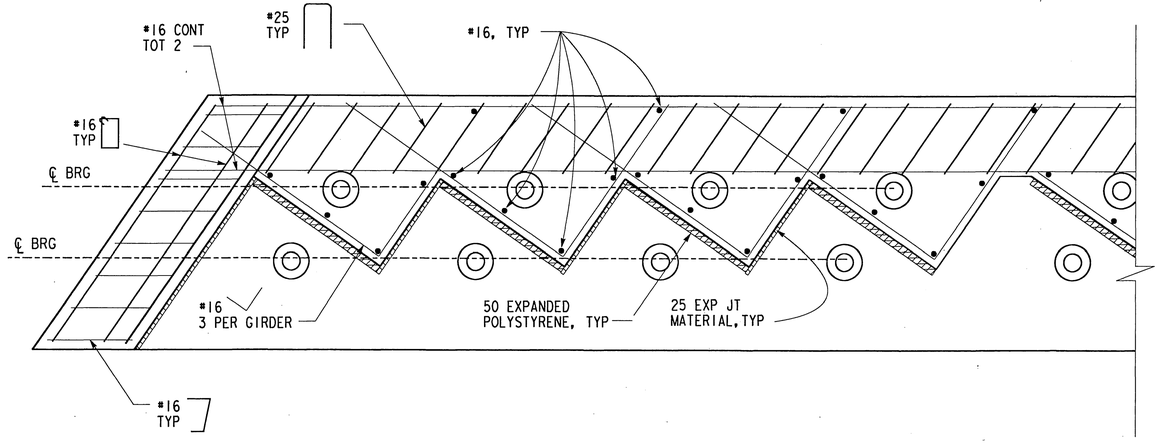

PIER 2 & 4 ADDITIONAL REINFORCEMENT PLAN

1:20

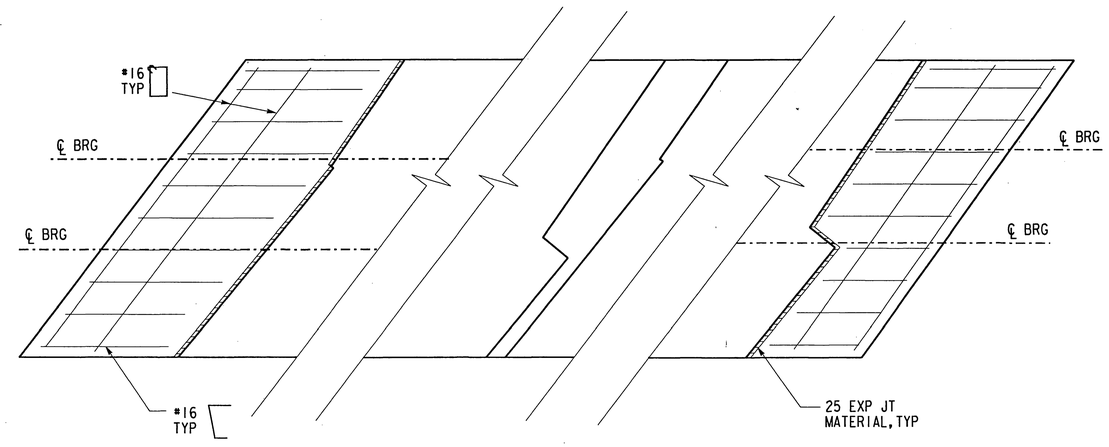

PIER 3 MISCELLANEOUS DETAIL PLAN

1:20

ALL DIMENSIONS ARE SHOWN IN MILLIMETERS UNLESS NOTED OTHERWISE.

NOTE:
THE CONTRACTOR SHALL VERIFY ALL CONTROLLING FIELD DIMENSIONS BEFORE ORDERING OR FABRICATING ANY MATERIAL.

REGISTERED PROFESSIONAL ENGINEER
H. YEE
No. 54757
Exp. 12/31/99
CIVIL
STATE OF CALIFORNIA

REV	DESCRIPTION	DATE	BY
2	FINAL SUBMITTAL	2/24/98	HLY
1	100% SUBMITTAL	2/9/98	HLY

DESIGNED: H. YEE 5/97
DETAILS: G ZWIEP/D GASTON 5/97
CHECKED: K FLECK/K SOYLAND 5/97
APPROVED BY: Richard McDuath
PUBLIC WORKS DIRECTOR
DATE 4-17-98

CITY OF RIVERSIDE, CALIFORNIA
MK CENTENNIAL
17300 REDHILL AVE. STE 150
IRVINE, CALIFORNIA 92614

ARLINGTON AVENUE UNDERPASS
AT AT&SF RAILROAD CROSSING
BN&SF BRIDGE NO 12.4, LS #7602
PIER AND PILE DETAILS 3

ACCOUNT NUMBER
R-3425-B
SHEET 8 OF 23

FILE: m:\1749\struct\aup_p3.dgn
PLOT TIME: 17:43:23

FOR REDUCED PLANS ORIGINAL SCALE IS IN MILLIMETERS 0 20 40 60 80 100

INDEXED 9-12-2000 LH

LEGEND

(GX) GIRDER CENTERLINE IDENTIFICATION.

△ ANGLE POINT IN FACE OF CURB

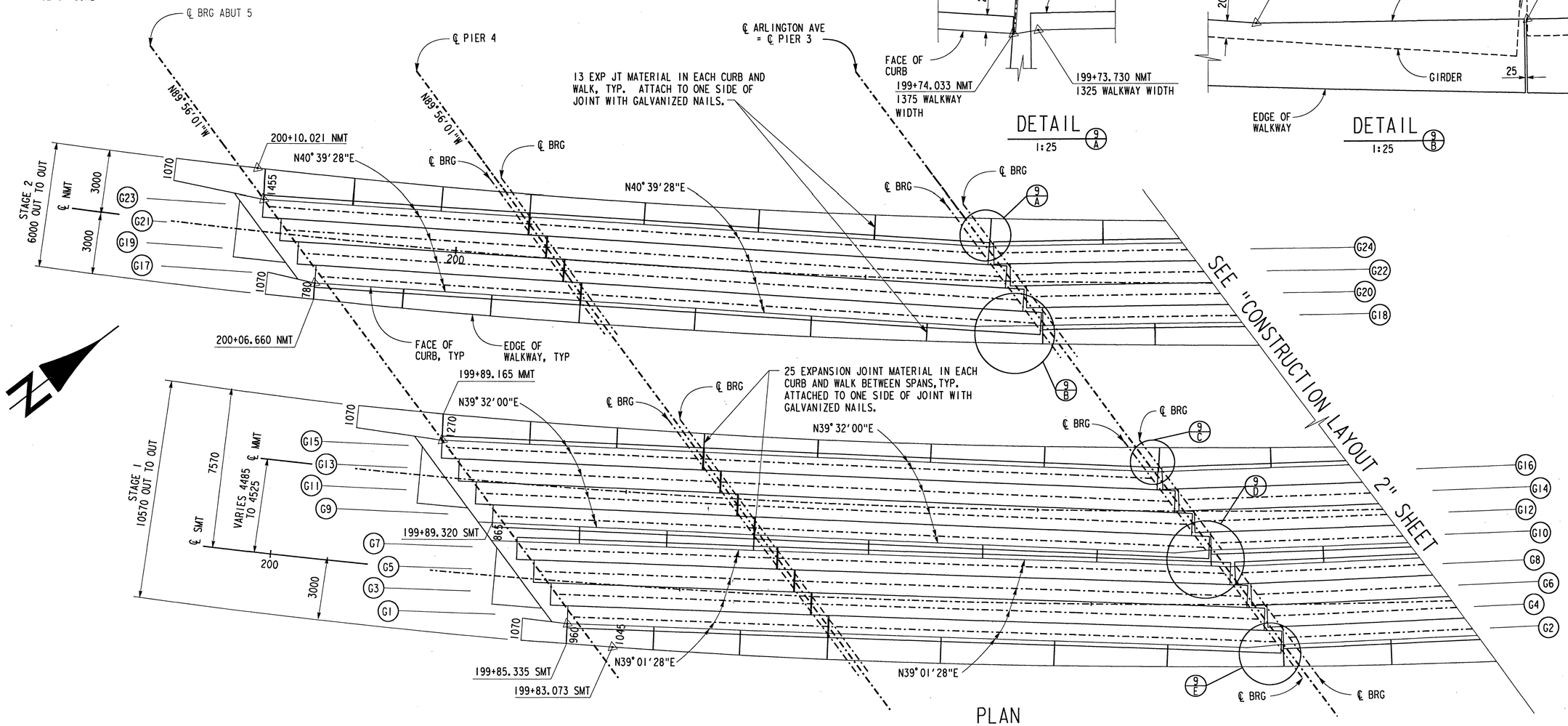

PLAN
1:100

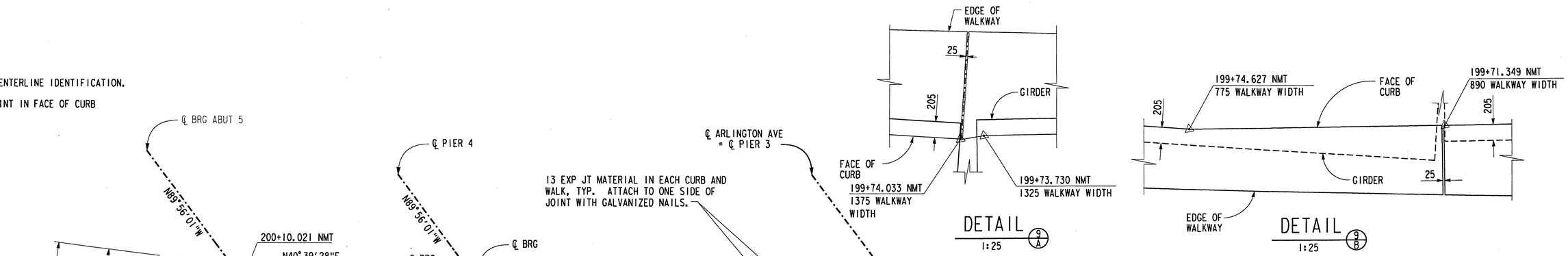

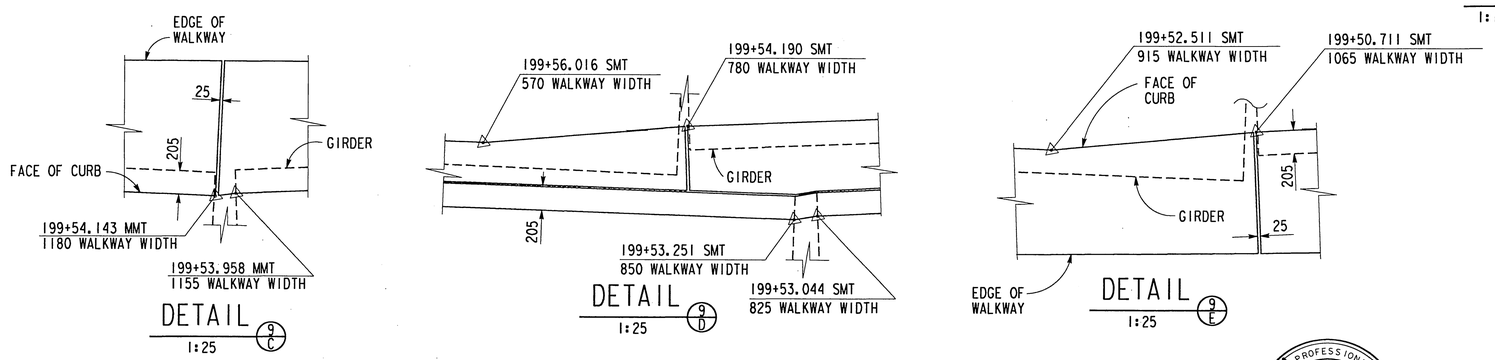

NOTES:

1. WALKWAY MAY BE EITHER CAST-IN-PLACE OR PRECAST PRIOR TO ERECTION OF GIRDERS. FOR LAYOUT DETAILS OF THE PRECAST ALTERNATIVE, SEE "PRECAST WALKWAY LAYOUT DETAILS 1" THROUGH "PRECAST WALKWAY LAYOUT DETAILS 3" SHEETS.

2. FOR LOCATION OF WALKWAY JOINTS, SEE "PRECAST WALKWAY LAYOUT DETAILS 1" THROUGH "PRECAST WALKWAY LAYOUT DETAILS 3" SHEETS.

ALL DIMENSIONS ARE SHOWN IN MILLIMETERS UNLESS NOTED OTHERWISE.

NOTE:
THE CONTRACTOR SHALL VERIFY ALL CONTROLLING FIELD DIMENSIONS BEFORE ORDERING OR FABRICATING ANY MATERIAL.

REGISTERED PROFESSIONAL ENGINEER — H. YEE — No. 54757 — Exp. 12/31/99 — CIVIL — STATE OF CALIFORNIA

REV	DESCRIPTION	DATE	BY			
2	FINAL SUBMITTAL	2/24/98	HLY	DESIGNED: H. YEE	5/97	APPROVED BY Richard McGrath, PUBLIC WORKS DIRECTOR
1	100% SUBMITTAL	2/9/98	HLY	DETAILS: G ZWIER/D GASTON	5/97	DATE 4-17-98
				CHECKED: I FAN/K SOYLAND	5/97	

CITY OF RIVERSIDE, CALIFORNIA
MK CENTENNIAL
17300 REDHILL AVE, STE 150
IRVINE, CALIFORNIA 92614

ARLINGTON AVENUE UNDERPASS
AT AT&SF RAILROAD CROSSING
BN&SF BRIDGE NO 12.4, LS #7602
CONSTRUCTION LAYOUT 1

ACCOUNT NUMBER R-3425-B

SHEET 9 OF 23

FOR REDUCED PLANS ORIGINAL SCALE IS IN MILLIMETERS 0 20 40 60 80 100

FILE: m:\1749\struct\oup_c11.dgn
PLOT TIME: 11:31:40

INDEXED 9-12-2000 LH

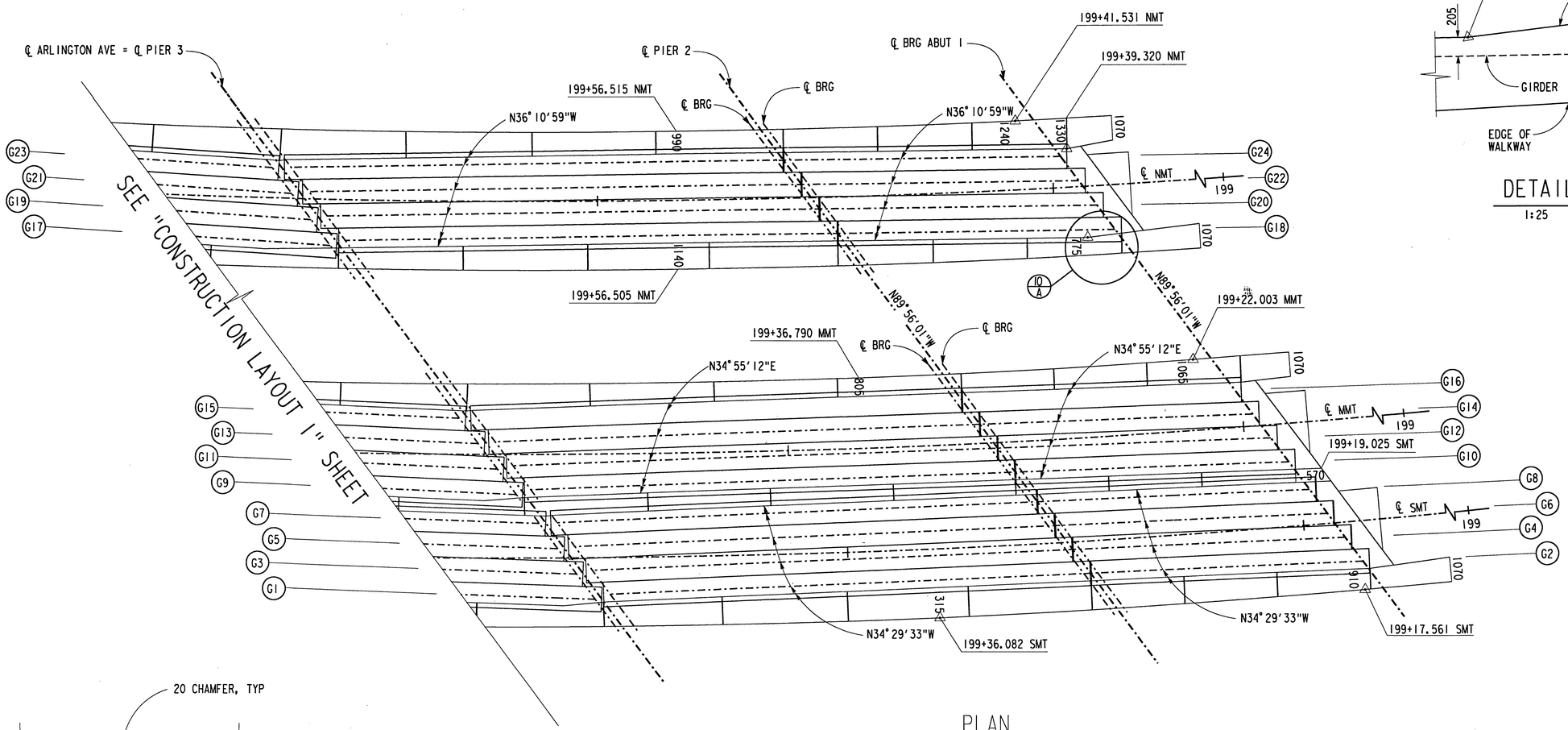

PLAN

1:100

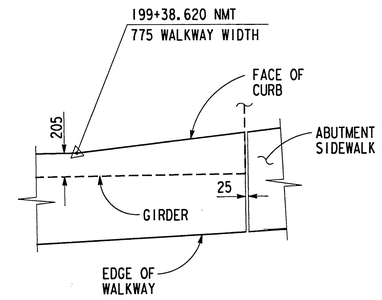

DETAIL 10/A

1:25

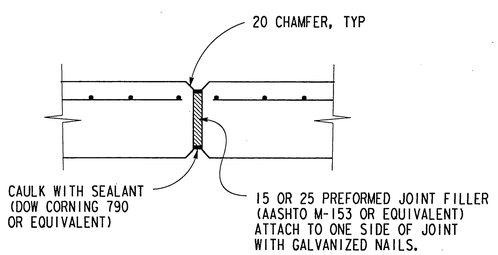

WALKWAY JOINT DETAIL

NO SCALE

NOTE:
THE CONTRACTOR SHALL VERIFY ALL CONTROLLING FIELD DIMENSIONS BEFORE ORDERING OR FABRICATING ANY MATERIAL.

REGISTERED PROFESSIONAL ENGINEER
H. L. YEE
No. 54757
Exp. 12/31/99
CIVIL
STATE OF CALIFORNIA

ALL DIMENSIONS ARE SHOWN IN MILLIMETERS UNLESS NOTED OTHERWISE.

REV	DESCRIPTION	DATE	BY
2	FINAL SUBMITTAL	2/24/98	HLY
1	100% SUBMITTAL	2/9/98	HLY

CITY OF RIVERSIDE, CALIFORNIA

MK CENTENNIAL
17300 REDHILL AVE, STE 150
IRVINE, CALIFORNIA 92614

DESIGNED: H. YEE 5/97
DETAILS: G ZWIEP/D GASTON 5/97
CHECKED: I FAN/K SOYLAND 5/97
APPROVED BY: Richard Mc Grath
PUBLIC WORKS DIRECTOR
DATE 4-17-98

ARLINGTON AVENUE UNDERPASS

AT AT&SF RAILROAD CROSSING

BN&SF BRIDGE NO 12.4, LS #7602

CONSTRUCTION LAYOUT 2

ACCOUNT NUMBER

R-3425-B

SHEET 10 OF 23

FILE: m:\1749\structure\oup_c12.dgn
PLOT TIME: 17:34:01

FOR REDUCED PLANS ORIGINAL

INDEXED 9-12-2000 GH

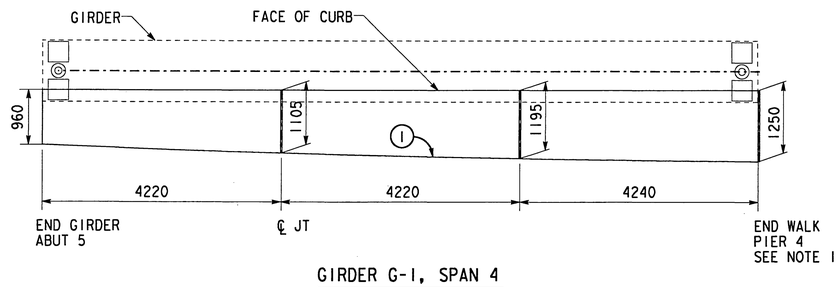

GIRDER G-1, SPAN 4

1:50

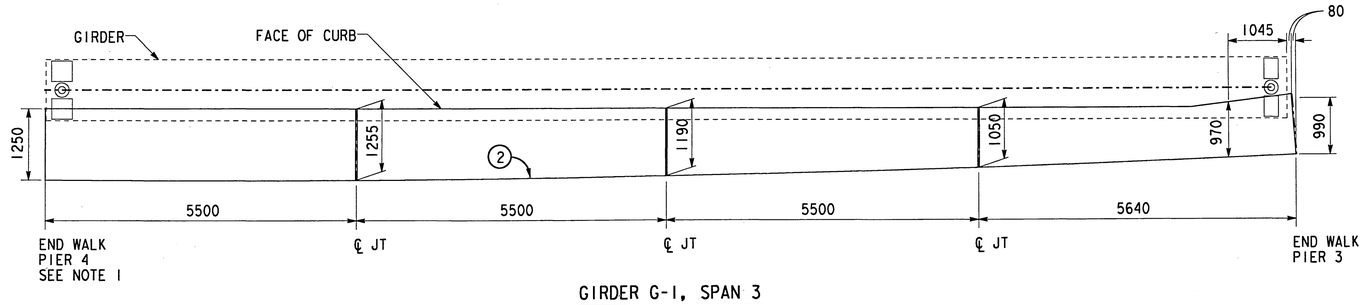

GIRDER G-1, SPAN 3

1:50

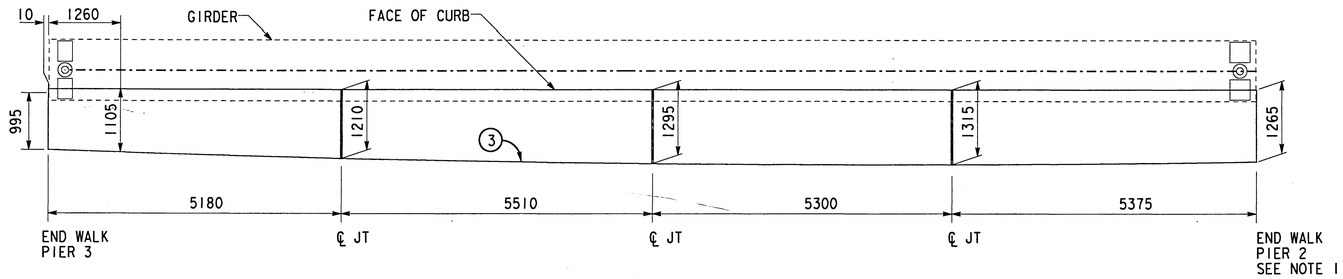

GIRDER G-2, SPAN 2

1:50

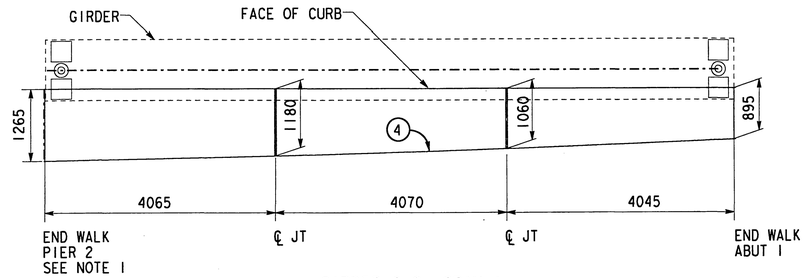

GIRDER G-2, SPAN 1

1:50

CURVE NO.	1	2	3	4	5	6	7	8
DELTA	01°33'36"	03°18'00"	03°11'24"	01°46'48"	01°57'00"	03°22'48"	03°18'36"	01°33'36"
RADIUS	426.800	426.800	426.800	426.800	416.230	416.230	416.230	416.230
LENGTH	10.431	22.147	21.370	11.954	12.765	22.087	21.623	10.187
TANGENT	5.216	11.076	10.687	5.977	6.383	11.046	10.814	5.094

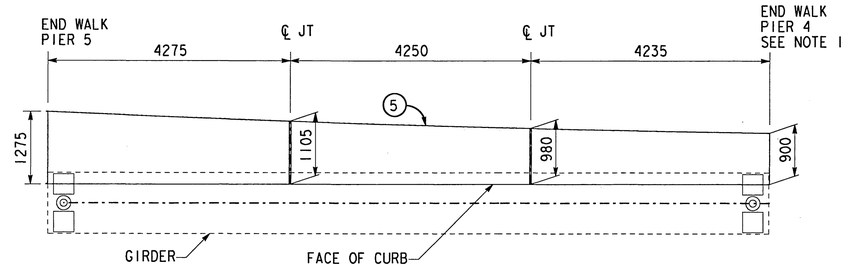

GIRDER G-15, SPAN 4

1:50

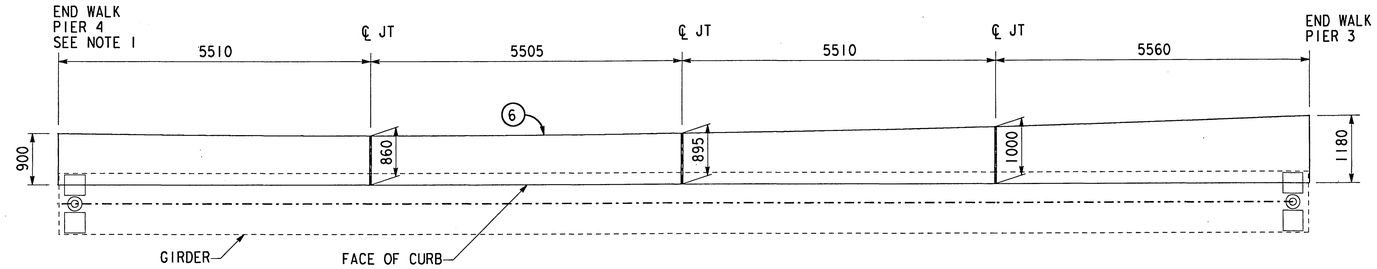

GIRDER G-15, SPAN 3

1:50

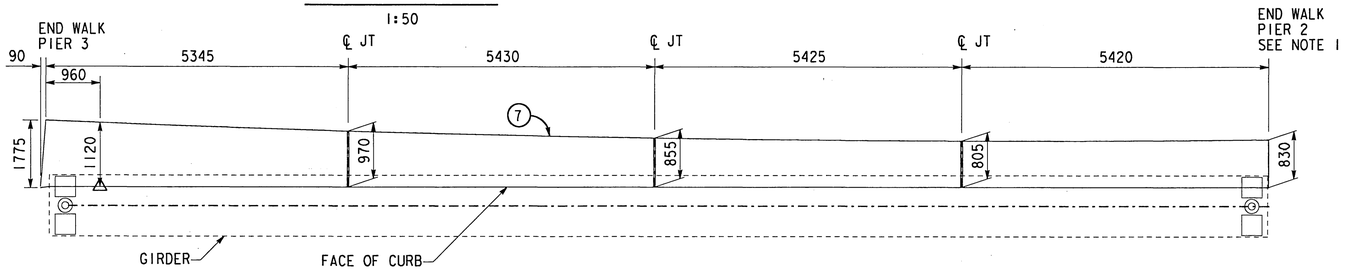

GIRDER G-16, SPAN 2

1:50

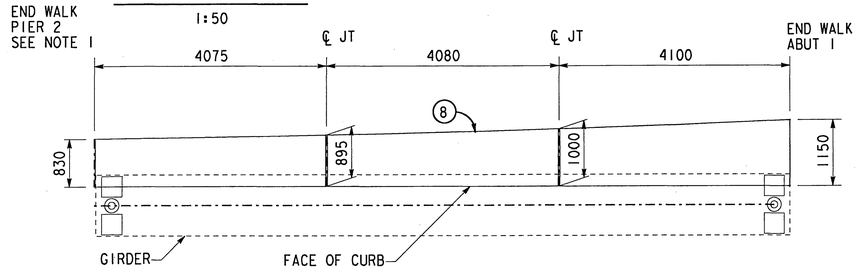

GIRDER G-16, SPAN 1

1:50

ALL DIMENSIONS ARE SHOWN IN MILLIMETERS UNLESS NOTED OTHERWISE.

NOTES:
1. FIELD ADJUSTMENT OF JOINTS AT THE ENDS OF GIRDERS MAY BE REQUIRED.
2. THE CONTRACTOR SHALL VERIFY ALL CONTROLLING FIELD DIMENSIONS BEFORE ORDERING OR FABRICATING ANY MATERIAL.

REGISTERED PROFESSIONAL ENGINEER
H L YEE
No. 54757
Exp. 12/31/99
CIVIL
STATE OF CALIFORNIA

REV	DESCRIPTION	DATE	BY
2	FINAL SUBMITTAL	2/24/98	HLY
1	100% SUBMITTAL	2/9/98	HLY

DESIGNED: H. YEE 5/97
DETAILS: G ZWIEP/D GASTON 5/97
CHECKED: I FAN/K SOYLAND 5/97
APPROVED BY: Richard Mc Grath
PUBLIC WORKS DIRECTOR
DATE 4-17-98

CITY OF RIVERSIDE, CALIFORNIA
MK CENTENNIAL
17300 REDHILL AVE, STE 150
IRVINE, CALIFORNIA 92614

ARLINGTON AVENUE UNDERPASS

AT AT&SF RAILROAD CROSSING

BN&SF BRIDGE NO 12.4, LS #7602

PRECAST WALKWAY LAYOUT DETAILS 1

ACCOUNT NUMBER

R-3425-B

SHEET 11 OF 23

FILE: m:\749\struct\aup_c13.dgn
PLOT TIME: 17:24:36

FOR REDUCED PLANS ORIGINAL

INDEXED 9-12-2000 LH

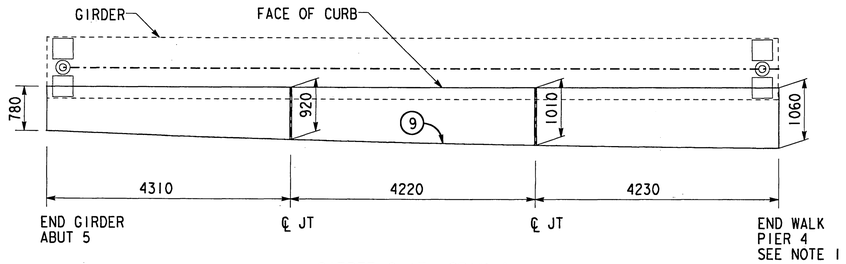

GIRDER G-17, SPAN 4

1:50

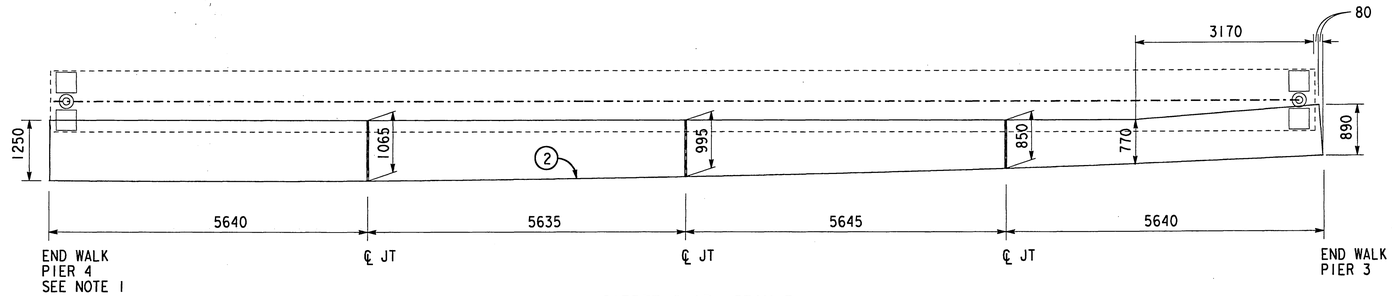

GIRDER G-17, SPAN 3

1:50

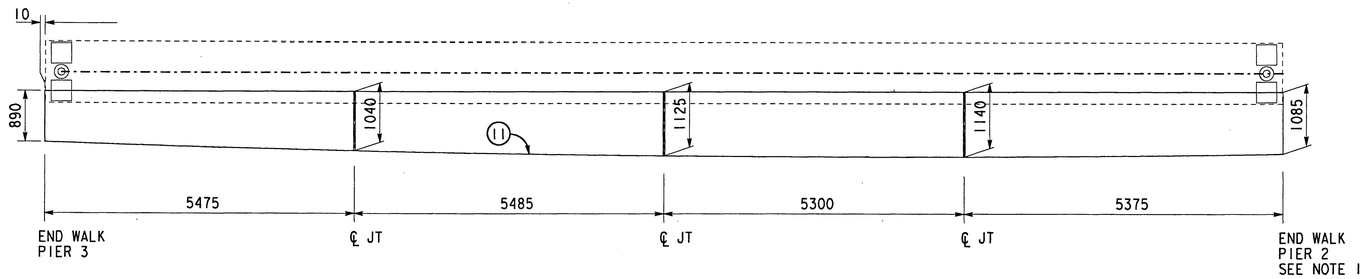

GIRDER G-18, SPAN 2

1:50

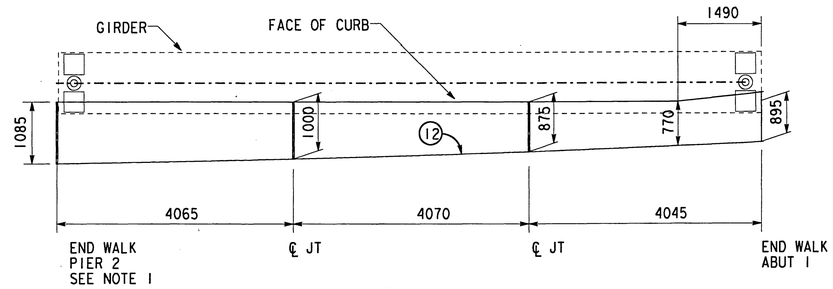

GIRDER G-18, SPAN 1

1:50

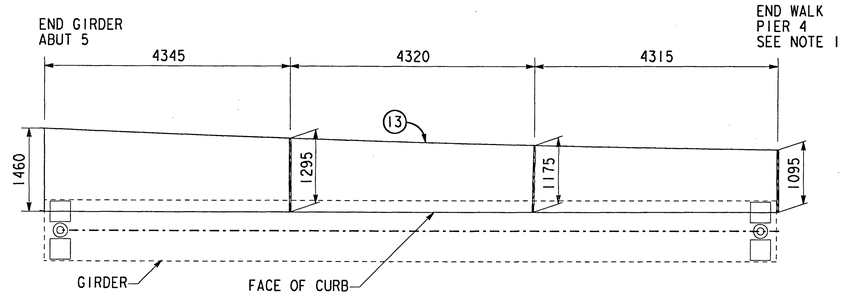

GIRDER G-23, SPAN 4

1:50

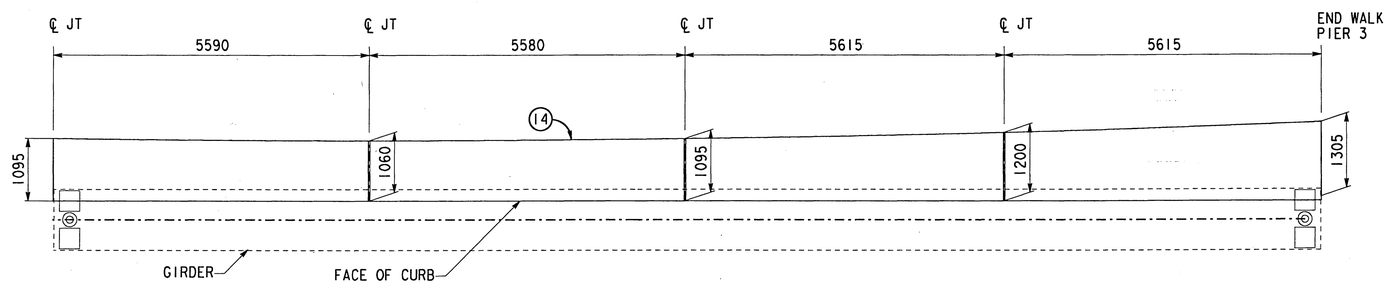

GIRDER G-23, SPAN 3

1:50

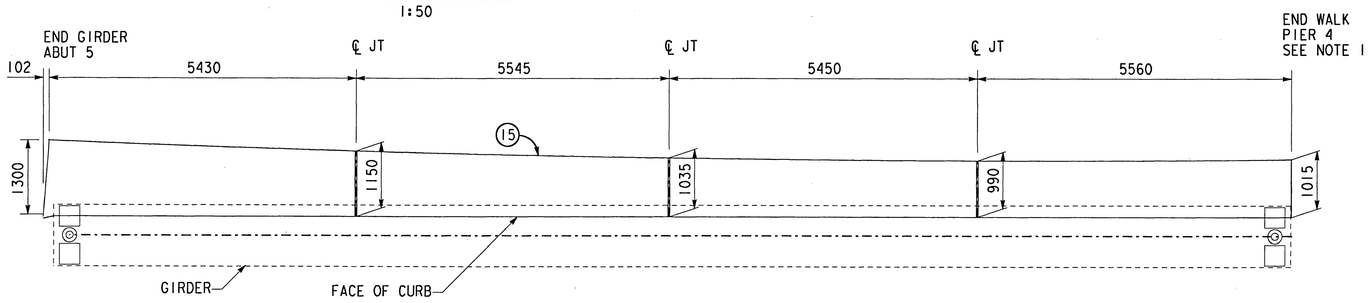

GIRDER G-24, SPAN 2

1:50

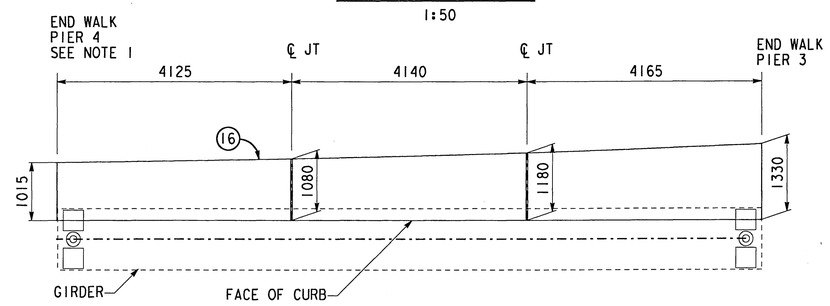

GIRDER G-24, SPAN 1

1:50

Curve No.	9	10	11	12	13	14	15	16
Delta	01°33'00"	03°14'24"	03°09'00"	01°44'24"	01°53'24"	03°16'12"	03°12'36"	01°29'24"
Radius	442.294	442.294	442.294	442.294	436.294	436.294	436.294	436.294
Length	10.800	22.534	21.915	12.110	12.969	22.401	21.988	10.188
Tangent	5.400	11.269	10.960	6.055	6.485	11.203	10.997	5.094

NOTE:
THE CONTRACTOR SHALL VERIFY ALL CONTROLLING FIELD DIMENSIONS BEFORE ORDERING OR FABRICATING ANY MATERIAL.

REGISTERED PROFESSIONAL ENGINEER
H. L. YEE
No. 54757
Exp. 12/31/99
CIVIL
STATE OF CALIFORNIA

ALL DIMENSIONS ARE SHOWN IN MILLIMETERS UNLESS NOTED OTHERWISE.

REV	DESCRIPTION	DATE	BY
2	FINAL SUBMITTAL	2/24/98	HLY
1	100% SUBMITTAL	2/9/98	HLY

DESIGNED: H. YEE 5/97
DETAILS: G ZWIEP/D GASTON 5/97
CHECKED: I FAN/K SOYLAND 5/97

CITY OF RIVERSIDE, CALIFORNIA
MK CENTENNIAL
17300 REDHILL AVE. STE 150
IRVINE, CALIFORNIA 92614

APPROVED BY Richard M. Pratt
PUBLIC WORKS DIRECTOR
DATE 5-17-98

ARLINGTON AVENUE UNDERPASS
AT AT&SF RAILROAD CROSSING
BN&SF BRIDGE NO 12.4, LS #7602
PRECAST WALKWAY LAYOUT DETAILS 2

ACCOUNT NUMBER
R-3425-B

SHEET 12 OF 23

FILE: m:\1749\struct\aup_c14.dgn
PLOT TIME: 18:07:20

FOR REDUCED PLANS ORIGINAL SCALE IS IN MILLIMETERS 0 20 40 60 80 100

INDEXED 01-12-2000 HH

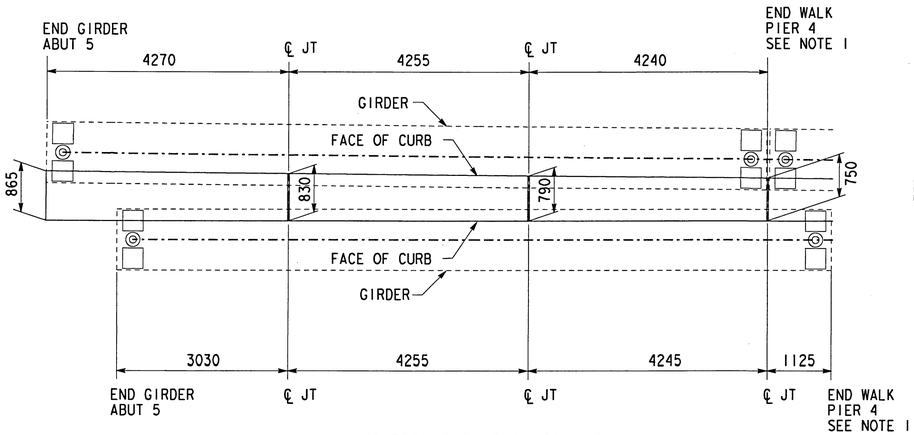

GIRDER G-9, G-7, SPAN 4

1:50

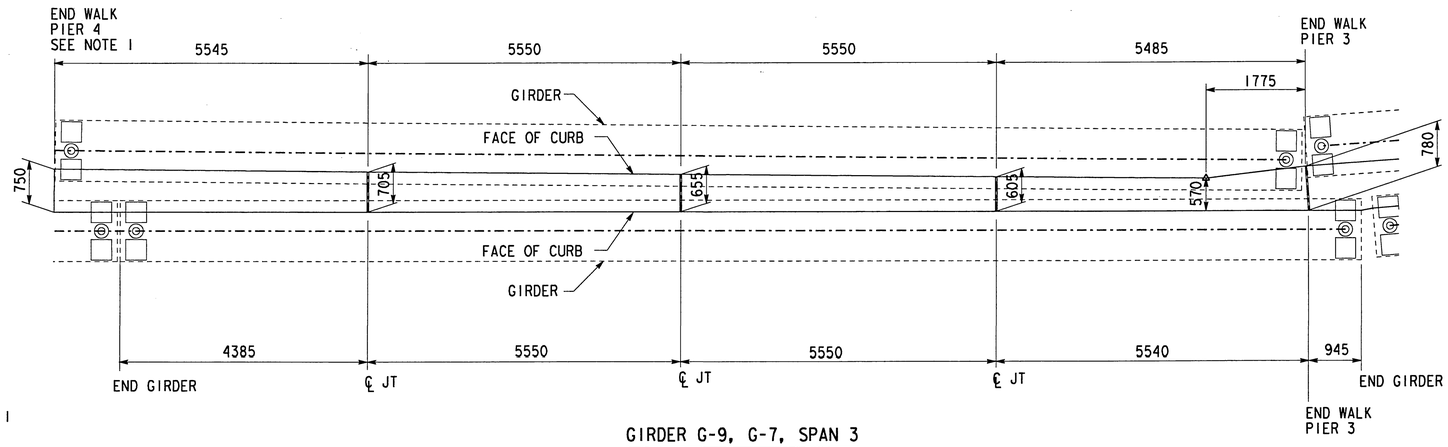

GIRDER G-9, G-7, SPAN 3

1:50

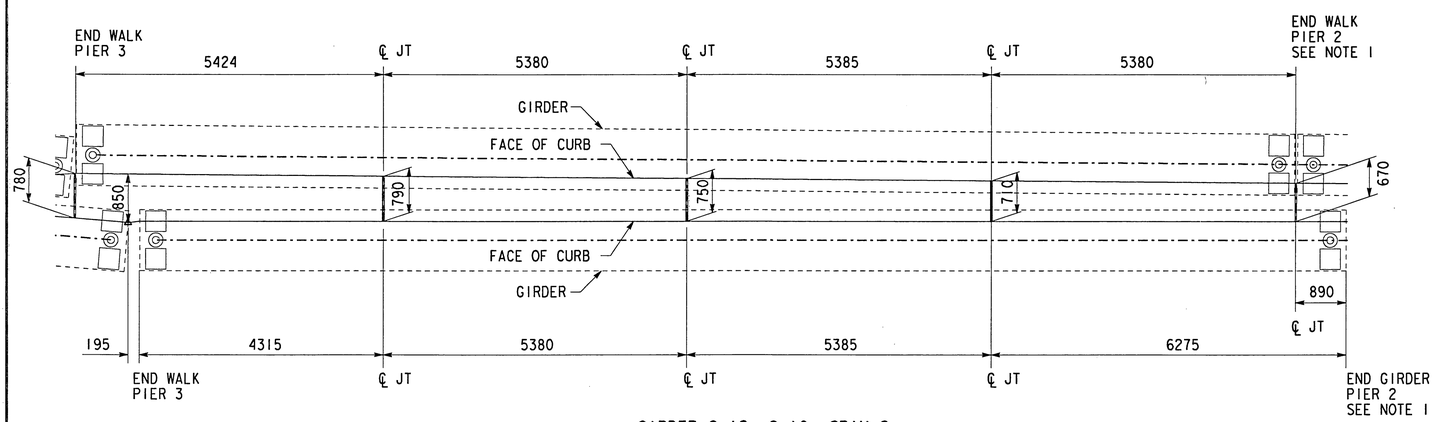

GIRDER G-12, G-10, SPAN 2

1:50

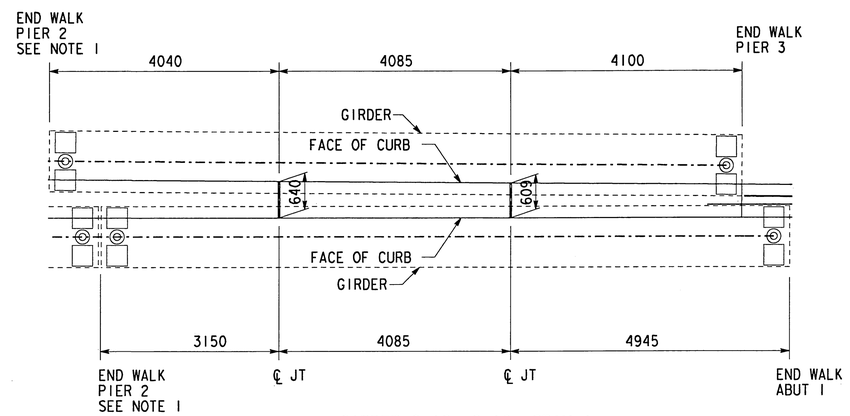

GIRDER G-12, G-10, SPAN 1

1:50

ALL DIMENSIONS ARE SHOWN IN MILLIMETERS UNLESS NOTED OTHERWISE.

NOTE:
THE CONTRACTOR SHALL VERIFY ALL CONTROLLING FIELD DIMENSIONS BEFORE ORDERING OR FABRICATING ANY MATERIAL.

REGISTERED PROFESSIONAL ENGINEER
H. LYCE
No. 54757
Exp. 12/31/99
CIVIL
STATE OF CALIFORNIA

REV	DESCRIPTION	DATE	BY
2	FINAL SUBMITTAL	2/24/98	HLY
1	100% SUBMITTAL	2/9/98	HLY

DESIGNED: H. YEE 5/97
DETAILS: G ZWIEP/D GASTON 5/97
CHECKED: I FAN/K SOYLAND 5/97

APPROVED BY
PUBLIC WORKS DIRECTOR
DATE 4-17-98

CITY OF RIVERSIDE, CALIFORNIA
MK CENTENNIAL
17300 REDHILL AVE. STE 150
IRVINE, CALIFORNIA 92614

ARLINGTON AVENUE UNDERPASS

AT AT&SF RAILROAD CROSSING

BN&SF BRIDGE NO 12.4, LS #7602

PRECAST WALKWAY DETAILS 3

ACCOUNT NUMBER
R-3425-B

SHEET 13 OF 23

FILE: m:\1749\structure\aup_c15.dgn
PLOT TIME: 18:07:09

FOR REDUCED PLANS ORIGINAL
0 20 40 60 80 100

INDEXED 9-12-2000 KH

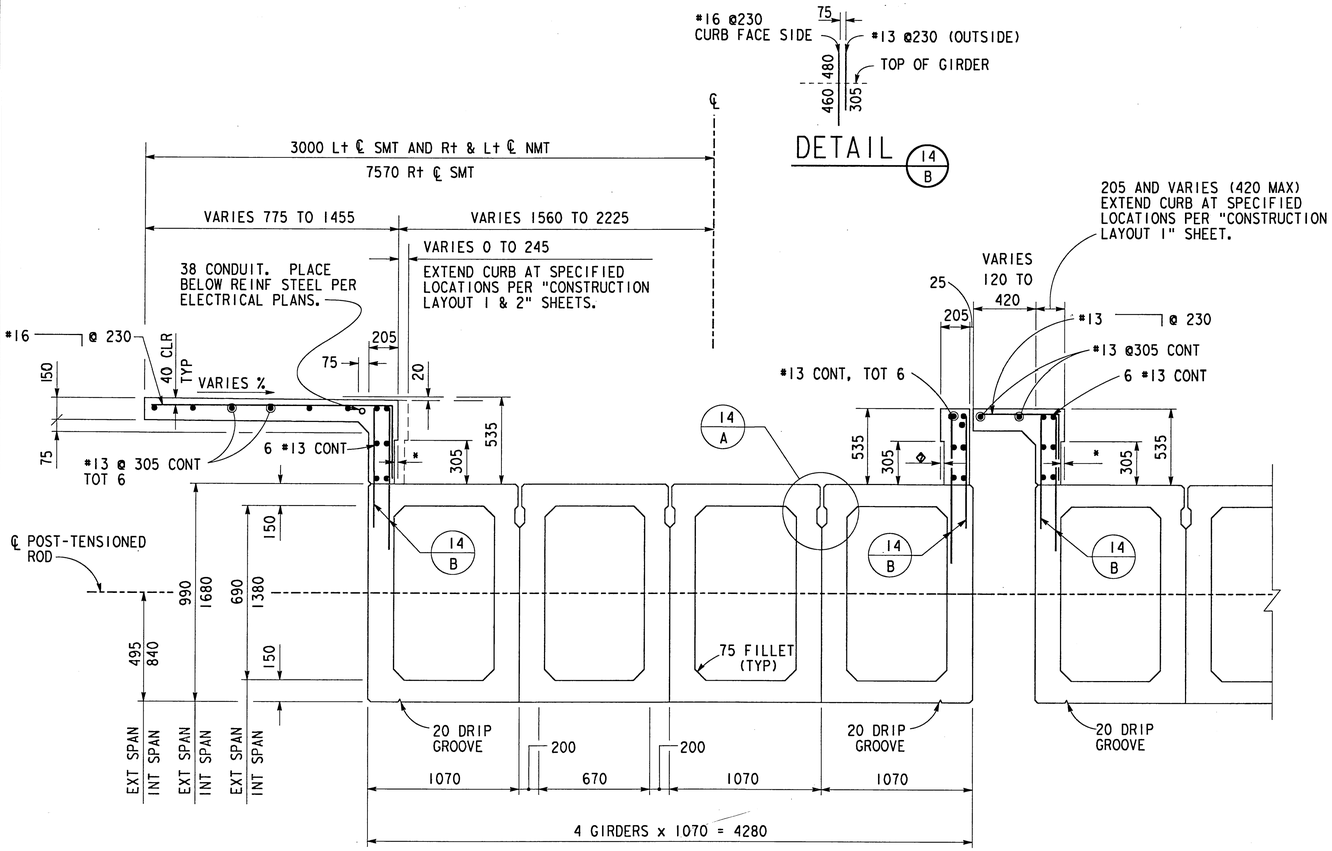

DETAIL 14/B

TYPICAL CROSS SECTION

NO SCALE

* NOTCH IN CURB TO BE 15 EXCEPT AT ENDS OF BEAMS WHERE NOTCH IS TO BE 25 WITHIN LIMITS OF RECESSES IN BEAMS.

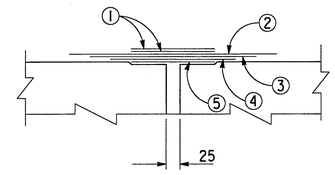

AT PIER

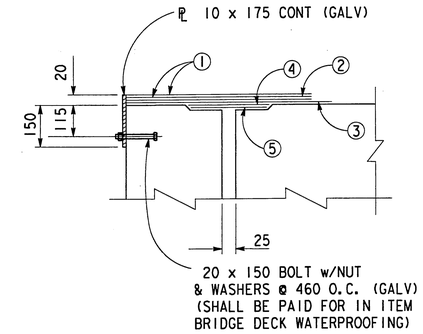

AT ABUTMENT

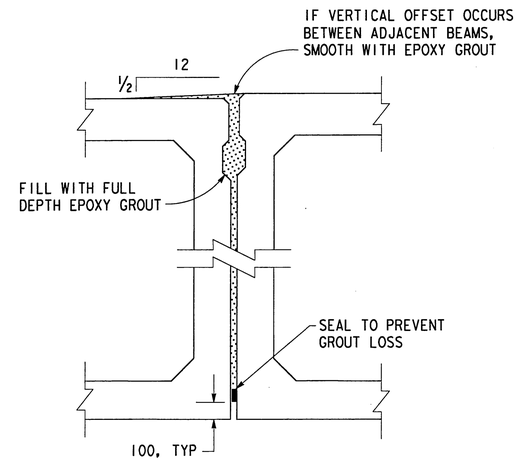

DETAIL 14/A

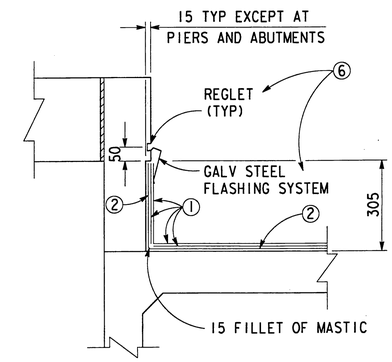

AT INTERIOR OF SPAN

LEGEND

1. 10 ASPHALT PROTECTIVE COVER SHEET.
2. RUBBERIZED ASPHALT & PLASTIC-FILM MEMBRANE WATERPROOFING (LOOP AND FOLD BACK 305 ONTO ITSELF AT ABUT. AND PIER JOINTS).
3. 1065 WIDE MEMBRANE WITH PLASTIC SIDE DOWN.
4. 1065 x 16 GAGE GALVANIZED SHEET METAL.
5. STEEL PLATE (A-36 GALVANIZED) SEE TABLE A "STEEL PLATE WIDTHS". ALL DIMENSIONS TO BE FIELD VERIFIED
6. GALVANIZED SHEET STEEL FLASHING SYSTEM.

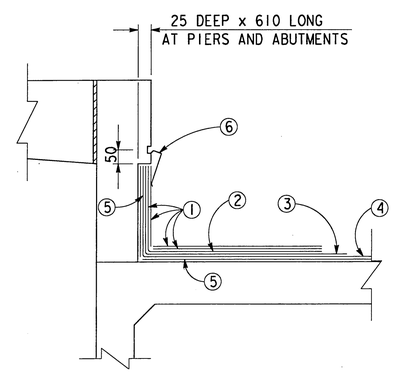

AT ENDS OF SPAN

TABLE A

STEEL PLATE WIDTHS

	NMT	MMT	SMT
ABUT 1	790	770	770
PIER 2	740	730	720
PIER 3	960	910	920
PIER 4	800	790	780
ABUT 5	830	820	810

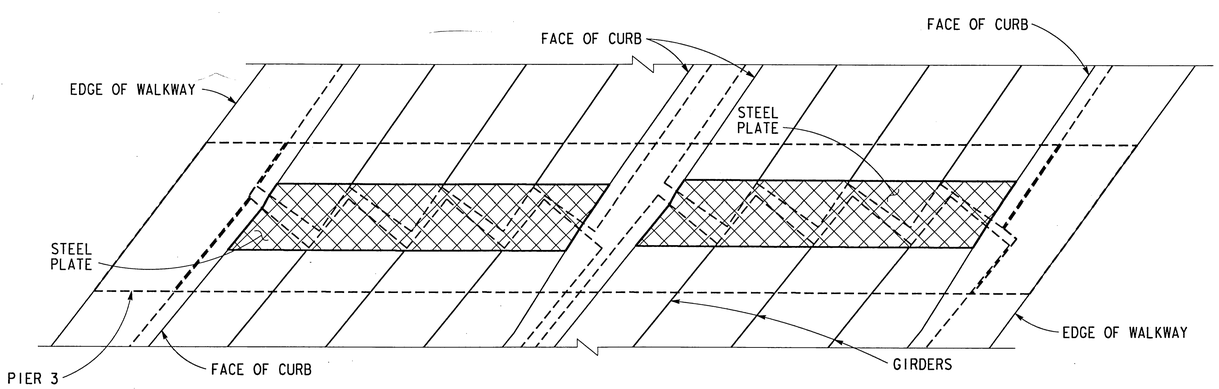

STEEL PLATE DETAIL

NO SCALE

PIER 3, STAGE 1 SHOWN, OTHER LOCATIONS SIMILIAR

NOTE: FIELD CUT STEEL PLATES TO FIT.

NOTE:
THE CONTRACTOR SHALL VERIFY ALL CONTROLLING FIELD DIMENSIONS BEFORE ORDERING OR FABRICATING ANY MATERIAL.

WATERPROOFING DETAILS

ALL DIMENSIONS ARE SHOWN IN MILLIMETERS UNLESS NOTED OTHERWISE.

REGISTERED PROFESSIONAL ENGINEER H. L. YEE No. 54757 Exp. 12/31/99 CIVIL STATE OF CALIFORNIA

REV	DESCRIPTION	DATE	BY
2	FINAL SUBMITTAL	2/24/98	HLY
1	100% SUBMITTAL	2/9/98	HLY

DESIGNED: H. YEE 5/97
DETAILS: G ZWIEP/D GASTON 5/97
CHECKED: I FAN/K SOYLAND 5/97
APPROVED BY: Richard Mc Grott, PUBLIC WORKS DIRECTOR, DATE 4-17-98

CITY OF RIVERSIDE, CALIFORNIA
MK CENTENNIAL
17300 REDHILL AVE, STE 150
IRVINE, CALIFORNIA 92614

ARLINGTON AVENUE UNDERPASS
AT AT&SF RAILROAD CROSSING
BN&SF BRIDGE NO 12.4, LS #7602
DECK PLAN AND DETAILS

ACCOUNT NUMBER R-3425-B
SHEET 14 OF 23

FILE: m:\1749\struct\aup_dbl.dgn
PLOT TIME: 17:41:08

FOR REDUCED PLANS ORIGINAL SCALE IS IN MILLIMETERS 0 20 40 60 80 100

INDEXED 9-12-2000

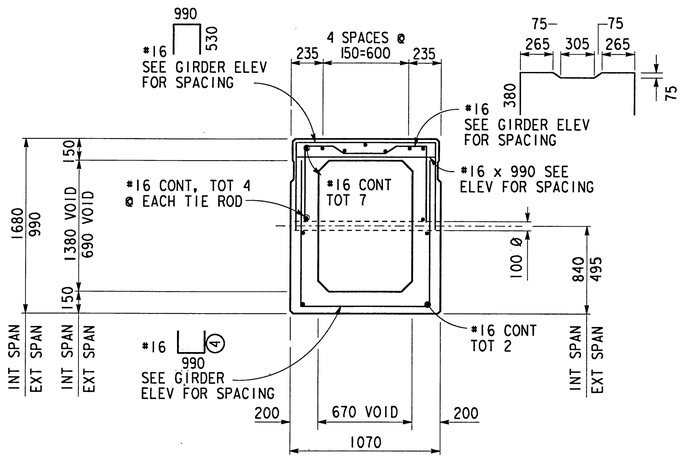

SECTION (16/A) (17/A)

INTERIOR BEAM

NOTES:

1. LONGITUDINAL BARS MAY BE ADDED IN WALLS PROVIDING A 50 MIN. C/C DISTANCE IS MAINTAINED BETWEEN THEM AND ANY PARALLEL PRESTRESSING STRAND.

2. VOID DIMENSIONS SHOWN ARE MAXIMUM AND MUST NOT BE EXCEEDED AT ANY POINT INCLUDING SPLICES OF VOID FORMS.

* REQUIRED FOR EXTERIOR BEAMS.

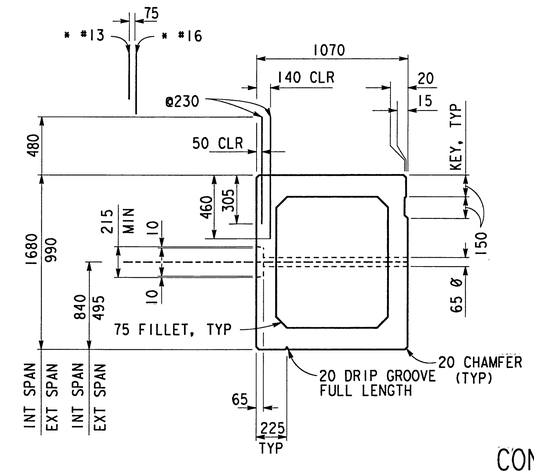

SECTION (16/A) (17/A)

EXTERIOR BEAM

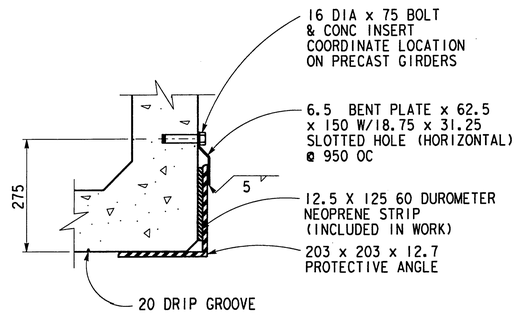

CONT. PROTECTIVE ANGLE DETAIL (12/C)

NOT TO SCALE

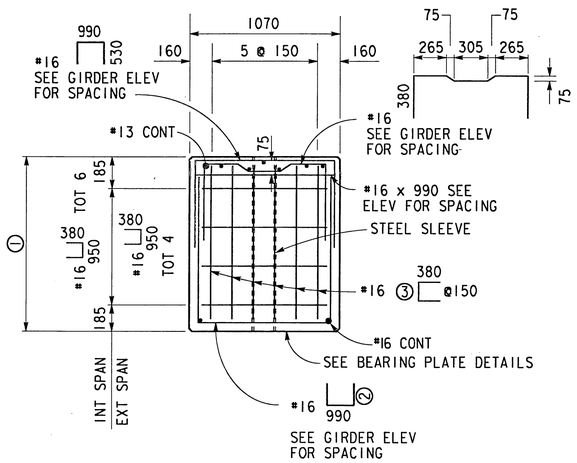

VIEW (16/B) (17/B)

		GIRDER DEPTH	
		1680	990
DIMENSIONS	①	1680	990
	②	1570	880
	③	1550	860
	④	1570	880
	⑤	1665	975

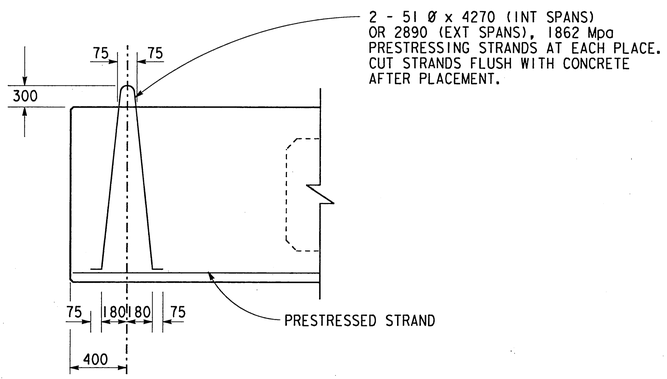

LIFTING LOOP DETAIL

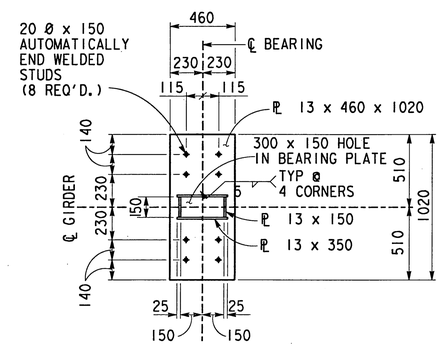

PLAN

BEARING PLATE & SLEEVE DETAILS

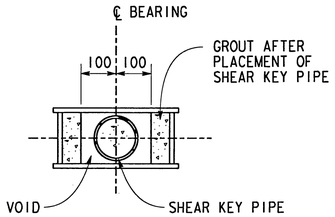

PLAN

SLEEVE CONSTRUCTION DETAIL
NO SCALE

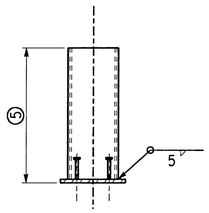

ELEVATION

BEARING PLATE & SLEEVE DETAILS

ALL DIMENSIONS ARE SHOWN IN MILLIMETERS UNLESS NOTED OTHERWISE.

NOTE:
THE CONTRACTOR SHALL VERIFY ALL CONTROLLING FIELD DIMENSIONS BEFORE ORDERING OR FABRICATING ANY MATERIAL.

REGISTERED PROFESSIONAL ENGINEER
H. YEE
No. 54757
Exp. 12/31/99
CIVIL
STATE OF CALIFORNIA

REV	DESCRIPTION	DATE	BY
2	FINAL SUBMITTAL	2/24/98	HLY
1	100% SUBMITTAL	2/9/98	HLY

DESIGNED: H. YEE 5/97
DETAILS: G ZWIEP/D GASTON 5/97
CHECKED: I FAN/K SOYLAND 5/97
APPROVED BY Richard McGrath
PUBLIC WORKS DIRECTOR
DATE 9-17-98

CITY OF RIVERSIDE, CALIFORNIA
MK CENTENNIAL
17300 REDHILL AVE. STE 150
IRVINE, CALIFORNIA 92614

ARLINGTON AVENUE UNDERPASS
AT AT&SF RAILROAD CROSSING
BN&SF BRIDGE NO 12.4, LS #7602
SUPERSTRUCTURE DETAILS 1

ACCOUNT NUMBER
R-3425-B
SHEET 15 OF 23

FILE: m:\1749\structure\aup_sd1.dgn
PLOT TIME: 18:14:04

FOR REDUCED PLANS ORIGINAL
0 20 40 60 80 100

INDEXED 9-12-2000 LFK

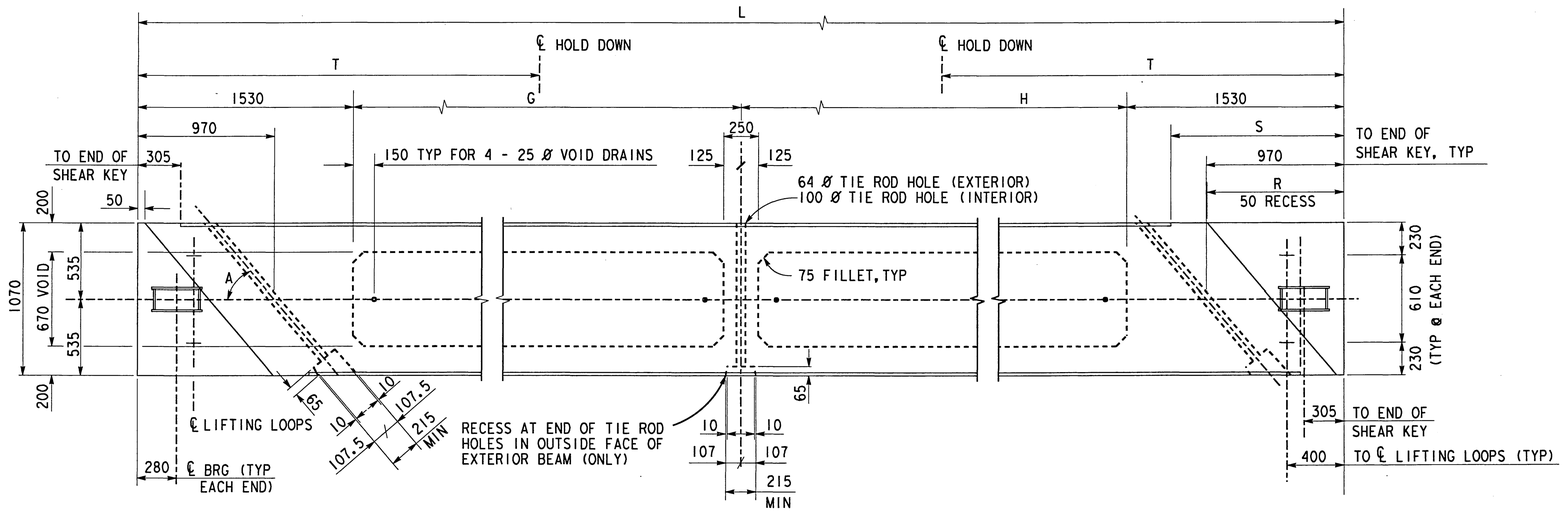

PLAN

EXTERIOR AND INTERIOR BEAMS (SPAN 1 AND SPAN 4)

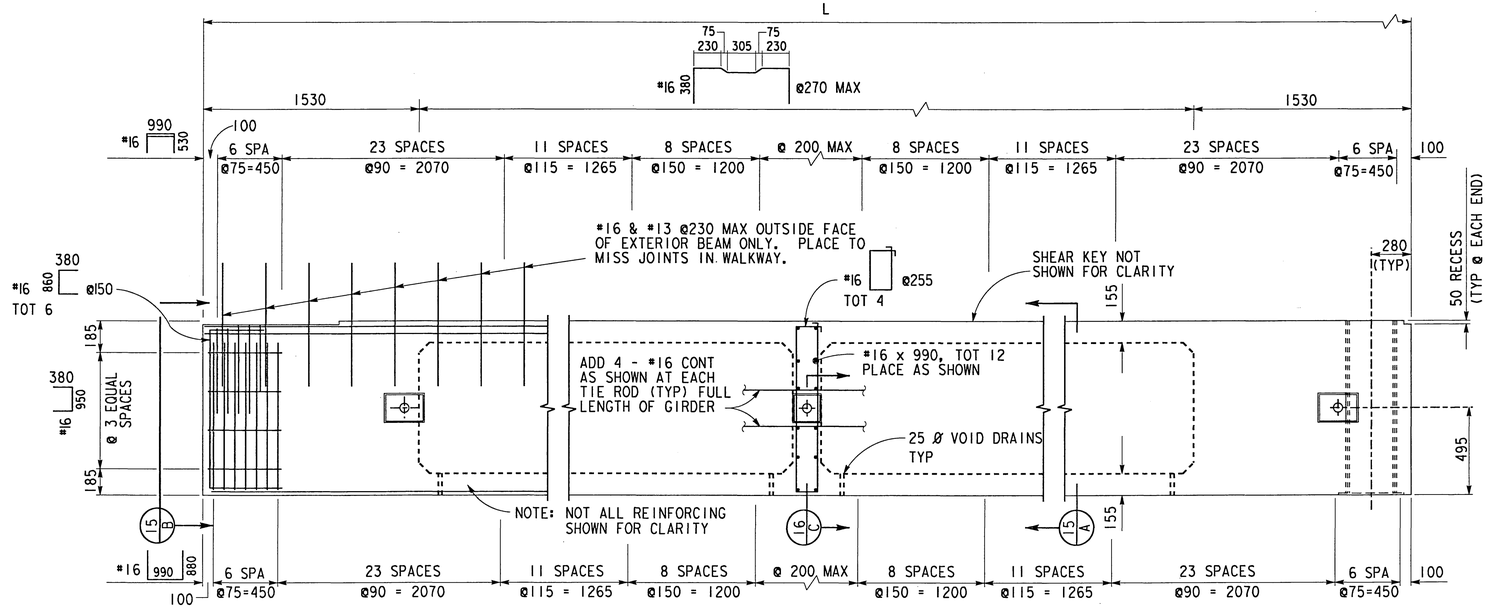

LONGITUDINAL BARS MAY BE ADDED IN WALLS PROVIDING A 50 MIN C/C DISTANCE IS MAINTAINED BETWEEN THEM ANY PARALLEL PRESTRESSING STRAND

ELEVATION

EXTERIOR AND INTERIOR BEAMS (SPAN 1 AND SPAN 4)

NOTES

1. ALL STEEL TO HAVE A MINIMUM OF 40 CONCRETE COVER EXCEPT AT SHEAR KEYS.
2. VOID DIMENSIONS SHOWN ARE MAXIMUM AND MUST NOT BE EXCEEDED AT POINT INCUDING SPLICES OF VOID FORMS.

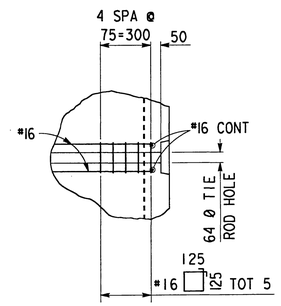

SECTION 16 C / 17 C

		NMT		MMT		SMT	
		SPAN 1	SPAN 4	SPAN 1	SPAN 4	SPAN 1	SPAN 4
L	mm	12 420	12 950	12 225	12 745	12 165	12 655
G (EXTERNAL)	mm	3510	3570	3465	3520	3455	3500
(INTERNAL)	mm	4290	4490	4210	4400	4185	5230
H (EXTERNAL)	mm	5850	6320	5705	6165	5650	6095
(INTERNAL)	mm	5070	5405	4960	5285	4920	4365
A		53°53'05"	49°24'04"	55°08'39"	50°31'57"	55°34'22"	51°02'31"
S	mm	1085	1220	1050	1185	1035	1170
R	mm	830	965	795	930	780	915
T	mm	4140	4315	4075	4250	4055	4220

NOTE:
THE CONTRACTOR SHALL VERIFY ALL CONTROLLING FIELD DIMENSIONS BEFORE ORDERING OR FABRICATING ANY MATERIAL.

REGISTERED PROFESSIONAL ENGINEER H. L. YEE No. 54757 Exp. 12/31/99 CIVIL STATE OF CALIFORNIA

ALL DIMENSIONS ARE SHOWN IN MILLIMETERS UNLESS NOTED OTHERWISE.

REV	DESCRIPTION	DATE	BY
2	FINAL SUBMITTAL	2/24/98	HLY
1	100% SUBMITTAL	2/9/98	HLY

DESIGNED: H. YEE 5/97
DETAILS: G ZWIEP/D GASTON 5/97
CHECKED: I FAN/K SOYLAND 5/97
APPROVED BY Richard McGrath PUBLIC WORKS DIRECTOR
DATE 4-17-98

CITY OF RIVERSIDE, CALIFORNIA
MK CENTENNIAL
17300 REDHILL AVE. STE 150
IRVINE, CALIFORNIA 92614

ARLINGTON AVENUE UNDERPASS
AT AT&SF RAILROAD CROSSING
BN&SF BRIDGE NO 12.4, LS #7602
SUPERSTRUCTURE DETAILS 2

ACCOUNT NUMBER
R-3425-B
SHEET 16 OF 23

FOR REDUCED PLANS ORIGINAL

INDEXED 9-12-2000

FILE: m:\1749\structure\aup_sd2.dgn
PLOT TIME: 17:17:34

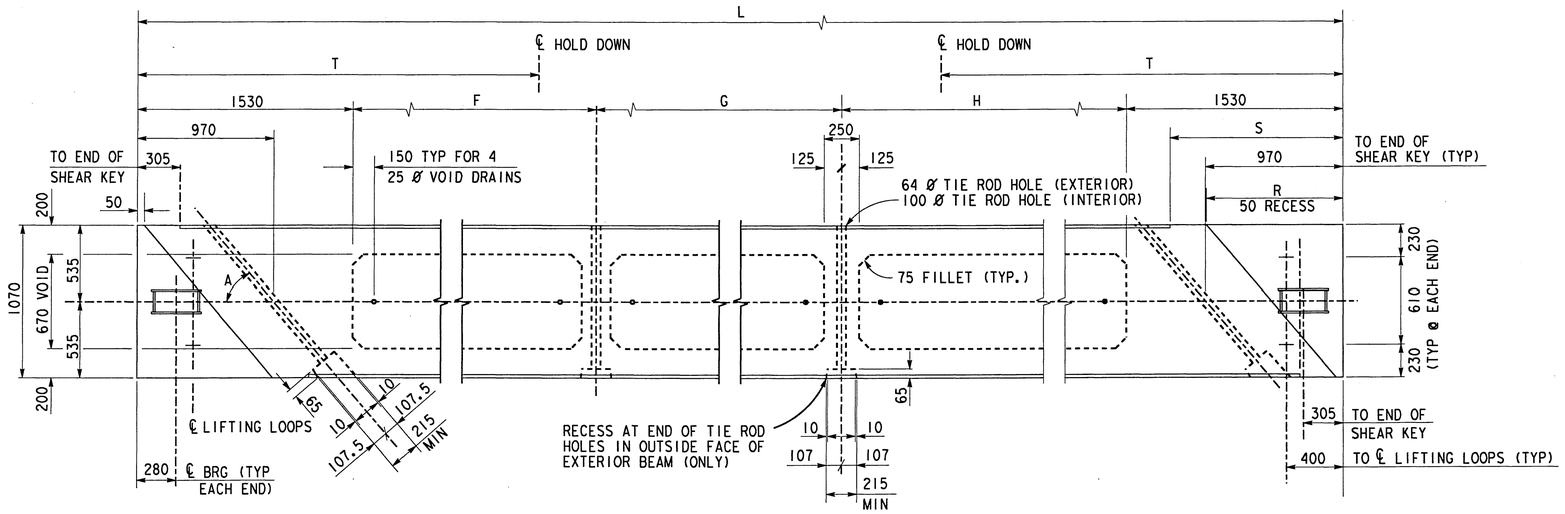

PLAN

EXTERIOR AND INTERIOR BEAMS (SPAN 2 AND SPAN 3)

NOTES

1. ALL STEEL TO HAVE A MINIMUM OF 40 CONCRETE COVER EXCEPT AT SHEAR KEYS.
2. VOID DIMENSIONS SHOWN ARE MAXIMUM AND MUST NOT BE EXCEEDED AT ANY POINT INCUDING SPLICES OF VOID FORMS.

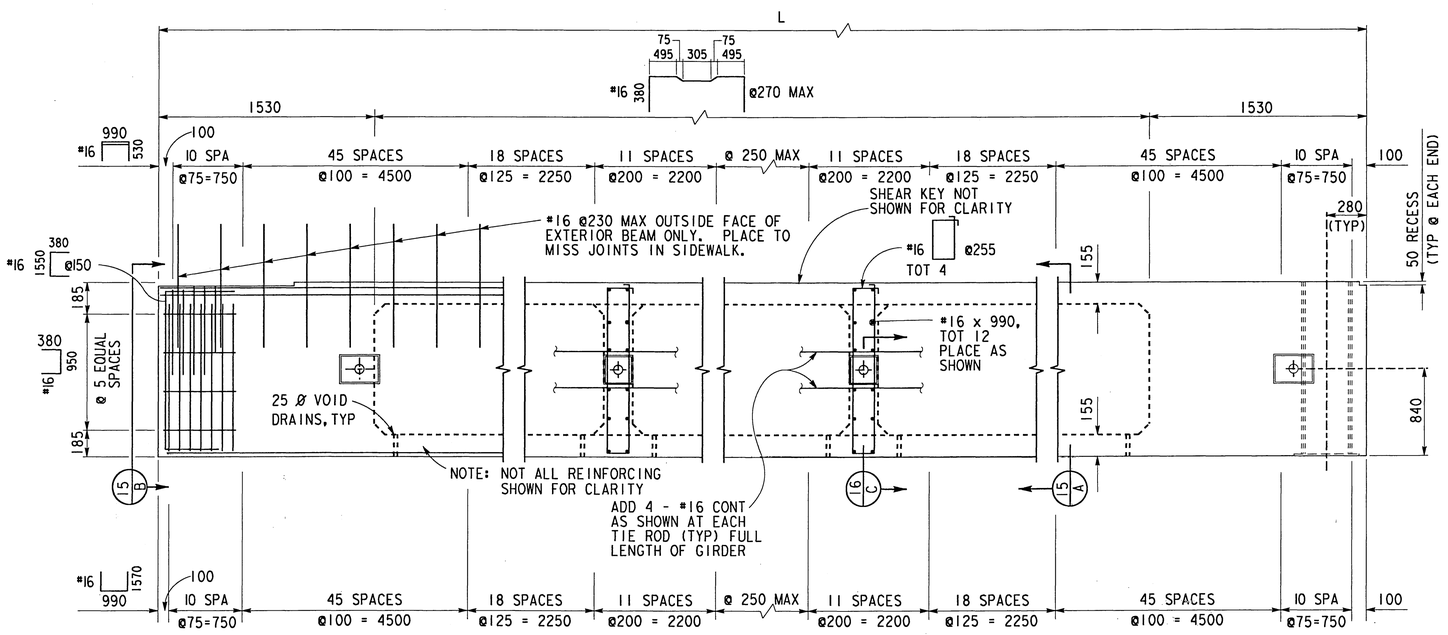

		NMT		MMT		SMT	
		SPAN 2	SPAN 3	SPAN 2	SPAN 3	SPAN 2	SPAN 3
L	mm	21 890	22 375	21 540	22 050	21 345	21 970
F (EXTERNAL)	mm	7415	7780	7245	7620	7160	7565
(INTERNAL)	mm	6635	6865	6500	6740	6425	6705
G (EXTERNAL)	mm	6345	6505	6230	6390	6165	6375
(INTERNAL)	mm	6345	6505	6230	6390	6165	6375
H (EXTERNAL)	mm	5070	5030	5010	4980	4960	4970
(INTERNAL)	mm	5850	5945	5750	5860	5695	5835
A		53°53'05"	49°24'04"	55°08'39"	50°31'57"	55°34'22"	51°02'31"
S	mm	1085	1220	1050	1185	1035	1170
R	mm	830	965	795	930	780	915
T	mm	7300	7460	7180	7350	7115	7325

LONGITUDINAL BARS MAY BE ADDED IN WALLS PROVIDING A 50 MIN. C/C DISTANCE IS MAINTAINED BETWEEN THEM ANY PARALLEL PRESTRESSING STRAND

ELEVATION

EXTERIOR AND INTERIOR BEAMS (SPAN 2 AND SPAN 3)

ALL DIMENSIONS ARE SHOWN IN MILLIMETERS UNLESS NOTED OTHERWISE.

NOTE:
THE CONTRACTOR SHALL VERIFY ALL CONTROLLING FIELD DIMENSIONS BEFORE ORDERING OR FABRICATING ANY MATERIAL.

REGISTERED PROFESSIONAL ENGINEER
H L YEE
No. 54757
Exp. 12/31/99
CIVIL
STATE OF CALIFORNIA

REV	DESCRIPTION	DATE	BY
2	FINAL SUBMITTAL	2/24/98	HLY
1	100% SUBMITTAL	2/9/98	HLY

DESIGNED: H. YEE 5/97
DETAILS: G ZWIEP/D GASTON 5/97
CHECKED: I FAN/K SOYLAND 5/97
APPROVED BY: Richard McGrath, PUBLIC WORKS DIRECTOR
DATE 8-17-98

CITY OF RIVERSIDE, CALIFORNIA
MK CENTENNIAL
17300 REDHILL AVE. STE 150
IRVINE, CALIFORNIA 92614

ARLINGTON AVENUE UNDERPASS
AT AT&SF RAILROAD CROSSING
BN&SF BRIDGE NO 12.4, LS #7602
SUPERSTRUCTURE DETAILS 3

ACCOUNT NUMBER
R-3425-B
SHEET 17 OF 23

FOR REDUCED PLANS ORIGINAL

INDEXED 9-12-2000

FILE: mt\1749\struct\oup_sd3.dgn
PLOT TIME: 17:19:57

NOTES FOR PRESTRESSED CONCRETE GIRDERS

1. CLEARANCE: THE MINIMUM DISTANCE BETWEEN GROUPS OR INDIVIDUAL STRANDS IS 45 (MEASURED BETWEEN CENTERS OF ADJACENT STRANDS).

2. REINFORCING STEEL SHALL BE TIED. TACK WELDING WILL NOT BE PERMITTED.

3. MANUFACTURER SHALL REMOVE PRESTRESSING STANDS TO A DEPTH OF 25 mm BELOW SURFACE OF CONCRETE ON END OF BEAM. RESULTING RECESSES SHALL BE FILLED WITH EPOXY GROUT.

4. ALL CONCRETE FORMS SHALL BE FILLETED AS SHOWN.

5. LIVE LOAD: COOPER'S E80 PLUS IMPACT =

   $35\text{-}L^2/500$ (EXTERIOR SPANS)
   $14+800/(L-2)$ (INTERIOR SPANS).

   NOTE: "L" IS MEASURED IN FEET.

   DEAD LOAD: (ASSUMED - kN PER LINEAL METER OF TRACK)

TRACK	2.920	
BALLAST	39.840	
CURB, WALK & HANDRAIL	10.800	
WATERPROOFING	1.900	
BEAMS	57.940	(EXTERIOR SPANS)
	84.210	(INTERIOR SPANS)

6. USE 13 DIAMETER, 7 WIRE UNCOATED, LOW RELAXATION STRANDS, (f's = 1862 Mpa) AND OTHERWISE MEETING THE REQUIREMENTS OF ASTM A416M.

   INITAL PRESTRESS FORCE: THE JACKING FORCE PER GIRDER INCLUDING ALL LOSSES

   fi = 0.789 X f's X As*

   FINAL PRESTRESS FORCE: THE FORCE REMANING PER GIRDER AFTER ALL LOSSES:

   ff = 0.619 X f's X As* (EXTERIOR SPANS)
   ff = 0.620 X f's X As* (INTERIOR SPANS)

   As* = AREA OF PRESTRESSING STEEL
   f's = ULTIMATE STRENGTH OF PRESTRESSING STEEL

7. CONCRETE STRENGTH:

   f'ci = AT TIME OF RELEASE OF PRESTRESS FORCE
   f'c = AT 28 DAYS

8. FORMS FOR VOID DRAINS SHALL BE REMOVED PRIOR TO SHIPMENT SO DRAINS MAY ACT AS WITNESS HOLES.

NOTES FOR POST-TENSIONING TIE ROD

1. POST-TENSIONING TIE ROD SHALL BE 32 mm DIAMETER BAR MEETING THE REQUIREMENTS OF ASTM A722 (1035 Mpa). All POST-TENSIONING HARDWARE SHALL BE GALVANIZED .

   ULTIMATE STRESS fpu = 1035 Mpa
   CROSS SECTION AREA Aps = 806 mm^2

   FINAL FORCE REQUIRED PER BAR AFTER ALL LOSSES
   Ff = 280 kN (EXTERIOR SPANS)
   Ff = 470 kN (INTERIOR SPANS)

   MINIMUM ANCHOR PLATE SIZE: 150 mm x 150 mm.

   ALLOWABLE ANCHORAGE BEARING STRESSES (A.R.E.A. 8.17.5.10)

   (A) IMMEDIATELY AFTER PRESTRESS TRANSFER

   $fb = 0.8\ f'ci\ \sqrt{(A2/A1) - 0.2}$,BUT NOT GREATER THAN 1.25 f'ci

   (B) AT SERVICE LOAD (AFTER ALLOWABLE FOR ALL PRESTRESS LOSSES):

   $fb = 0.6\ f'c\sqrt{A2/A1}$,BUT NOT GREATER THAN f'c WHERE

   A1 = BEARING AREA OF ANCHOR PLATE OF POST-TENSIONING BAR

   A2 = MAXIMUM AREA OF THE PORTION OF THE ANCHORAGE SURFACE THAT IS GEOMETRICALLY SIMILAR TO, AND CONCENTRIC WITH, THE AREA OF THE ANCHOR PLATE OF THE POST-TENSIONING BAR.

2. MANUFACTURER'S SHOP DRAWINGS AND CALCULATIONS SHALL BE SUBMITTED FOR APPROVAL.

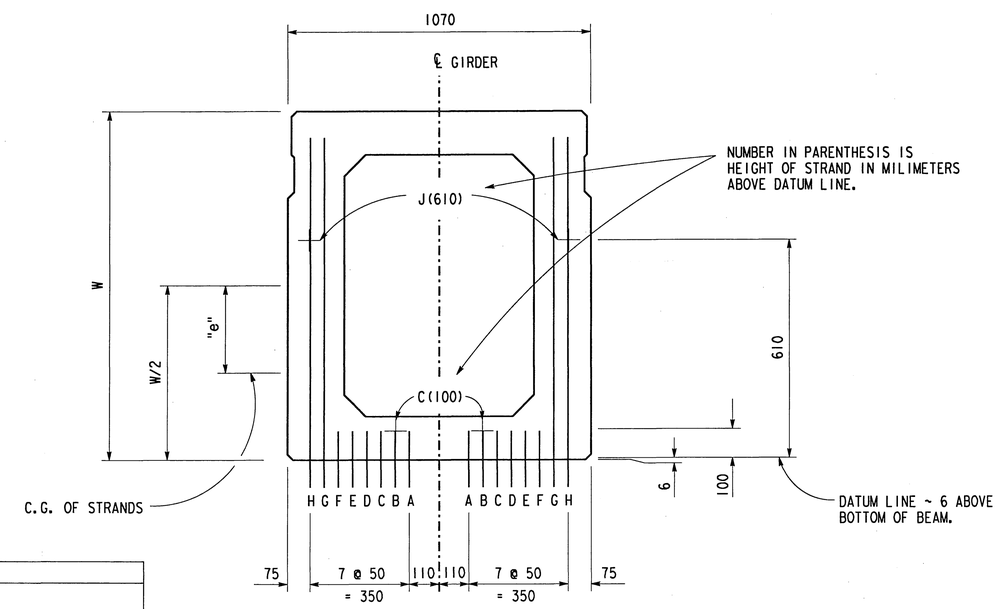

STRAND PATTERN DIAGRAM

NO SCALE

GIRDER AND PRESTRESSED STRANDS SCHEDULE									
L	W (mm)	CONCRETE STRENGTH f'ci (MPa)	CONCRETE STRENGTH f'c (MPa)	fi (kN)	ff (kN)	"e" AT ENDS (mm)	"e" AT HARP (mm)	NO. STRANDS	STRAND PATTERN(s)
(1)	990	35	45	5220	4100	210	345	36	STRAND PATTERN BETWEEN HARP POINTS ABDE(50,100) F(100) G(50,100,150,205,865) H(50,100,150,205) STRAND PATTERN AT END ABDE(50,100) F(100) G(50,100,760,810,865) H(50,100,760,810)
(2)	1680	35	45	7540	5930	355	635	52	STRAND PATTERN BETWEEN HARP POINTS ABCDEF(50,100) G(50,100,150,200,255,305,355,1525) H(50,100,200,255,305,355) STRAND PATTERN AT END ABCDEF(50,100) G(50,100,150,1120,1170,1220,1270,1525) H(50,100,1120,1170,1220,1270)

(1) FOR LENGTHS OF SPAN 1 AND SPAN 4 GIRDERS, SEE CHART ON "SUPERSTRUCTURE DETAILS 2" SHEET.

(2) FOR LENGTHS OF SPAN 2 AND SPAN 3 GIRDERS, SEE CHART ON "SUPERSTRUCTURE DETAILS 3" SHEET.

ALL DIMENSIONS ARE SHOWN IN MILLIMETERS UNLESS NOTED OTHERWISE.

NOTE:
THE CONTRACTOR SHALL VERIFY ALL CONTROLLING FIELD DIMENSIONS BEFORE ORDERING OR FABRICATING ANY MATERIAL.

REGISTERED PROFESSIONAL ENGINEER
H. YEE
No. 54757
Exp. 12/31/99
CIVIL
STATE OF CALIFORNIA

REV	DESCRIPTION	DATE	BY
2	FINAL SUBMITTAL	2/24/98	HLY
1	100% SUBMITTAL	2/9/98	HLY

DESIGNED: H. YEE 5/97
DETAILS: G ZWIEP/D GASTON 5/97
CHECKED: I FAN 5/97
APPROVED BY: Richard De Groot, PUBLIC WORKS DIRECTOR
DATE 8-17-98

CITY OF RIVERSIDE, CALIFORNIA
MK CENTENNIAL
17300 REDHILL AVE, STE 150
IRVINE, CALIFORNIA 92614

ARLINGTON AVENUE UNDERPASS
AT AT&SF RAILROAD CROSSING
BN&SF BRIDGE NO 12.4, LS #7602
PRESTRESSED CONCRETE GIRDER DETAILS

ACCOUNT NUMBER
R-3425-B
SHEET 18 OF 23

FOR REDUCED PLANS ORIGINAL SCALE IS IN MILLIMETERS 0 20 40 60 80 100

INDEXED 9-12-2000 HH

FILE:m:\749\struct\aup_pc1.dgn
PLOT TIME:18:59:54

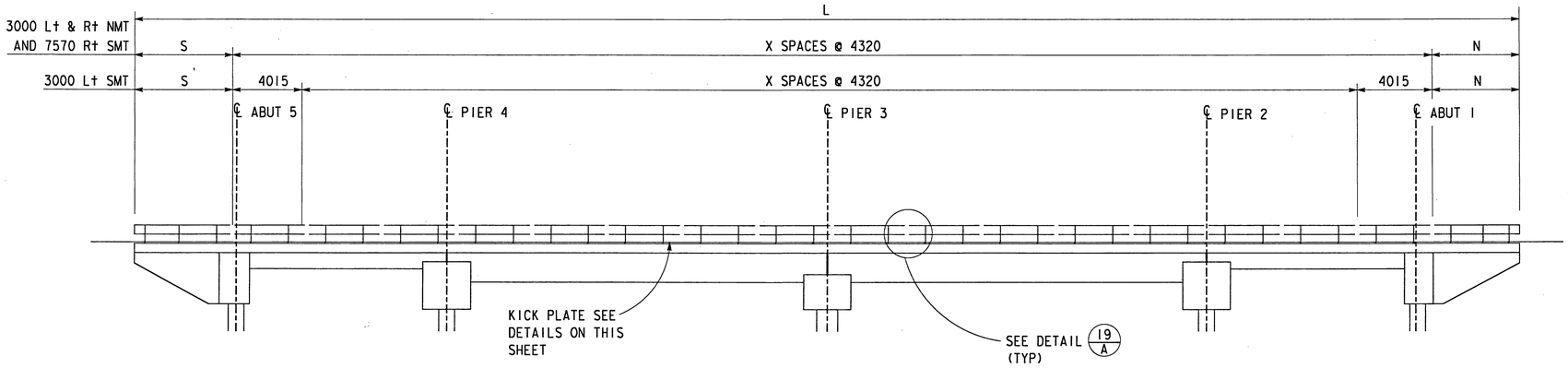

ELEVATION

1:150

LOCATION	L	X	S	A	N	B
	m		mm	mm	mm	mm
3000 R† NMT	76.230	15	5670	2125	5760	2215
3000 L† NMT	75.895	15	5850	2305	5245	1700
7570 R† SMT	75.235	15	4955	1410	5480	1935
3000 L† SMT	74.225	13	4985	1440	5050	1505

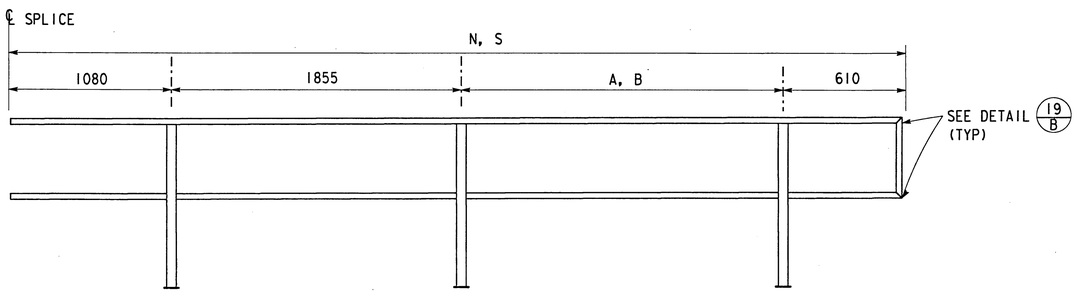

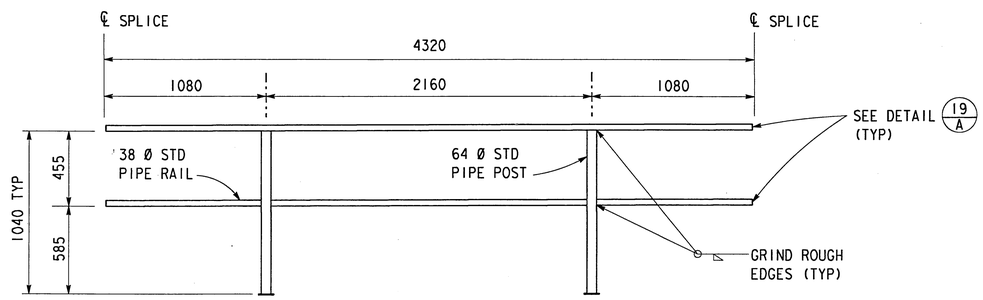

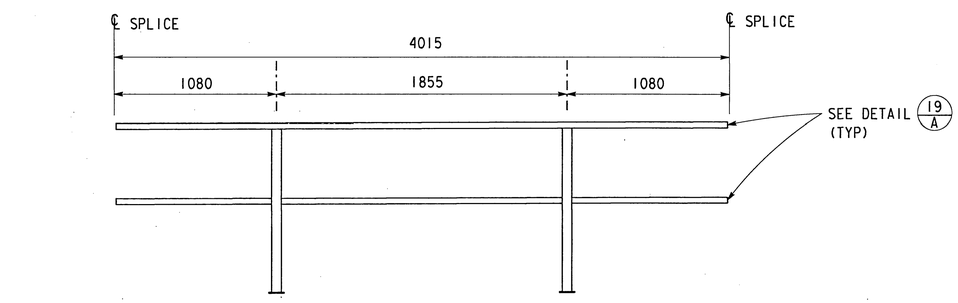

NOTE:
ALL HANDRAILS AND FASTENING HARDWARE TO BE GALVANIZED.

HANDRAIL DETAILS

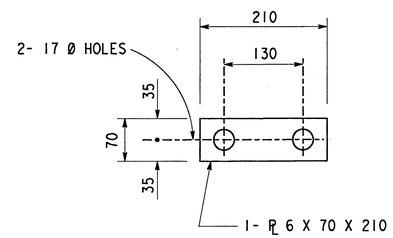

ANCHOR PLATE

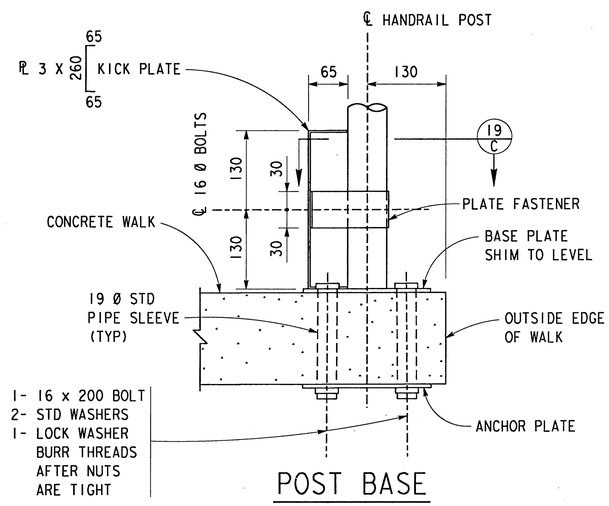

POST BASE

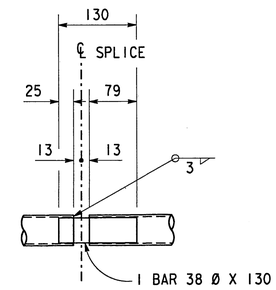

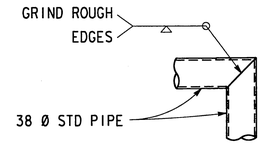

DETAIL 19/B

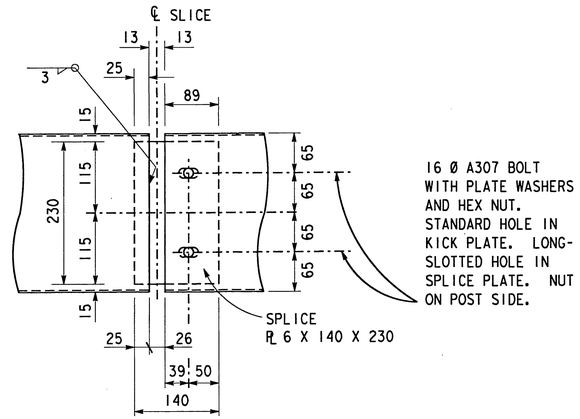

DETAIL 19/A

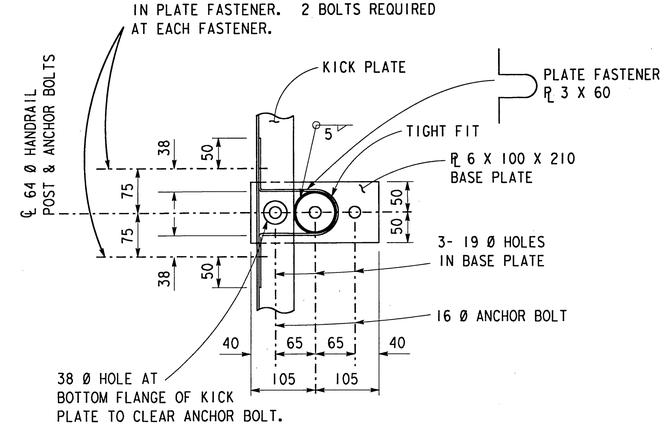

SECTION 19/C

ALL DIMENSIONS ARE SHOWN IN MILLIMETERS UNLESS NOTED OTHERWISE.

NOTE:
THE CONTRACTOR SHALL VERIFY ALL CONTROLLING FIELD DIMENSIONS BEFORE ORDERING OR FABRICATING ANY MATERIAL.

REGISTERED PROFESSIONAL ENGINEER
H. YEE
No. 54757
Exp. 12/31/99
CIVIL
STATE OF CALIFORNIA

REV	DESCRIPTION	DATE	BY
2	FINAL SUBMITTAL	2/24/98	HLY
1	100% SUBMITTAL	2/9/98	HLY

DESIGNED: H. YEE 5/97
DETAILS: G. ZWIEP/D. GASTON 5/97
CHECKED: I. FAN/K. SOYLAND 5/97
APPROVED BY: Richard McBrett, PUBLIC WORKS DIRECTOR
DATE 4-17-98

CITY OF RIVERSIDE, CALIFORNIA
MK CENTENNIAL
17300 REDHILL AVE, STE 150
IRVINE, CALIFORNIA 92614

ARLINGTON AVENUE UNDERPASS
AT AT&SF RAILROAD CROSSING
BN&SF BRIDGE NO 12.4, LS #7602
HANDRAIL DETAILS

ACCOUNT NUMBER
R-3425-B
SHEET 19 OF 23

FOR REDUCED PLANS ORIGINAL SCALE IS IN MILLIMETERS 0 20 40 60 80 100

FILE: m:\1749\struct\oup_hd.dgn
PLOT TIME: 18:14:15

INDEXED 01-12-2000 KH

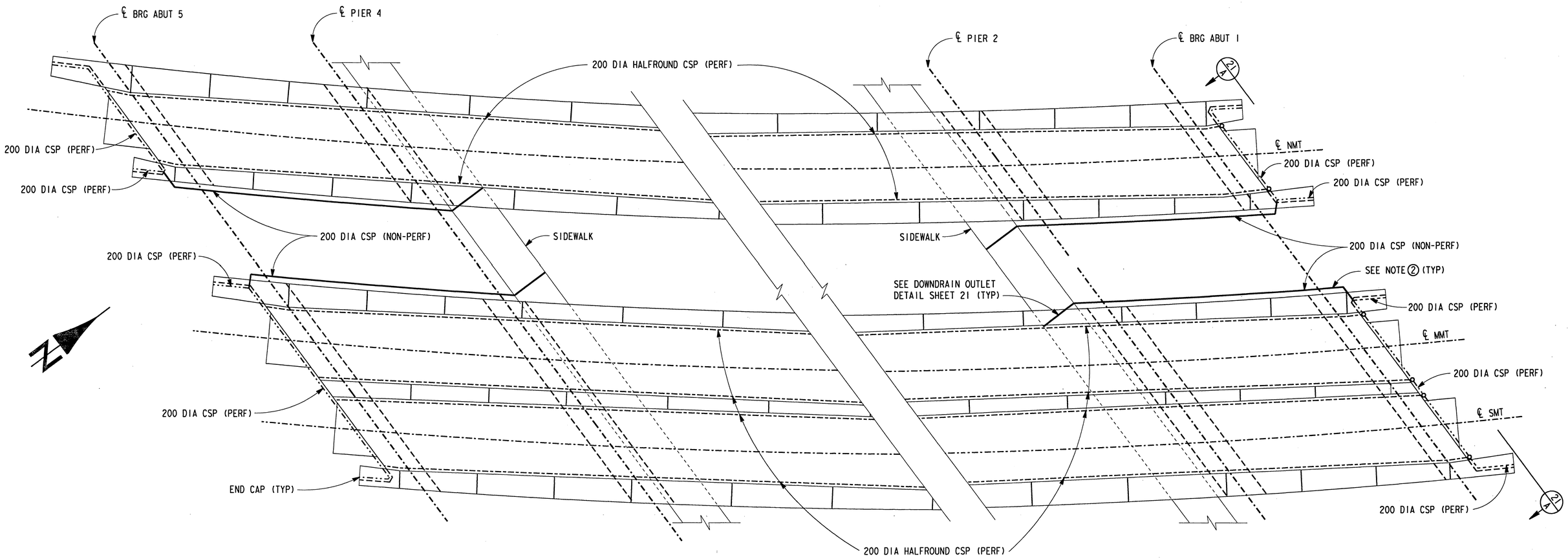

PLAN

1:100

SUMMARY OF QUANTITIES FOR DRAINAGE SYSTEM

	ITEM	UNIT	QUANTITY
①	200mm DIA HALFROUND CSP	M	428.7
①	STEEL BOTTOM PAN	M	428.7
①	END PLATE, 200mm HALFROUND	UNIT	12
①	COLLAR: 16 GAGE	UNIT	6
	OUTLET STUB, 130mm DIA x 150mm	UNIT	6
①	REDUCER	UNIT	6
①	150mm DIA CSP	M	14.0
①	TEE CONNECTOR 150mm TO 200mm	UNIT	6
①	200mm DIA PERFORATED CSP	M	50.8
	PIPE CLAMP ASSEMBLY	UNIT	12
①	200mm DIA NON-PERFORATED CSP	M	62.1
	GEOTEXTILE FABRIC	SQ M	170.0
①	200mm DIA END CAP	UNIT	8
①	ELBOW, 200mm DIA	UNIT	10
①	200mm WYE CONNECTOR	UNIT	4
①	DOWN DRAIN OUTLET	UNIT	4

① BITUMINOUS COATED

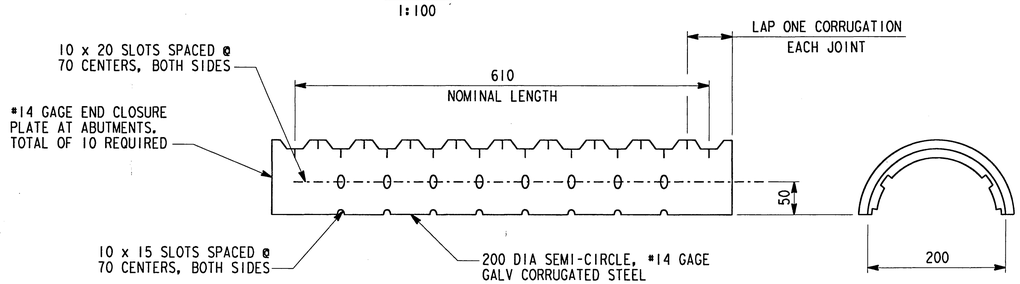

COVER

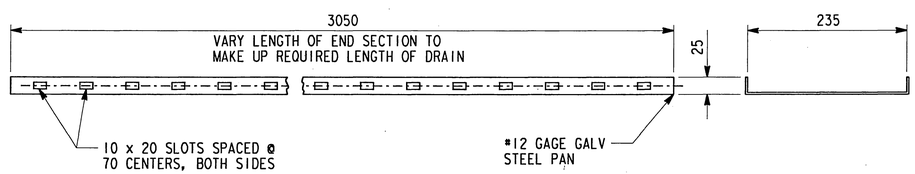

BOTTOM PAN

DECK DRAIN DETAILS

LEGEND

- 200 DIA HALFROUND CSP (PERF)
- 200 DIA CSP (PERF)
- 150 DIA CSP (NON-PERF)
- 200 DIA CSP (NON-PERF)

NOTES

① WRAP 200mm DIA BITUMINOUS COATED PERFORATED CSP WITH GEOTEXTILE FABRIC

② EXTEND CSP 300mm FROM WINGWALL, TURN PERPENDICULAR TO THE ROADWAY AND EXTEND PIPE BENEATH SLOPE PAVING GUTTER

③ IMPERIAL GAGE EQUIVALENTS AS FOLLOWS:
#16 GAGE = 1.63mm
#14 GAGE = 2.01mm
#12 GAGE = 2.77mm

ALL DIMENSIONS ARE SHOWN IN MILLIMETERS UNLESS NOTED OTHERWISE.

NOTE:
THE CONTRACTOR SHALL VERIFY ALL CONTROLLING FIELD DIMENSIONS BEFORE ORDERING OR FABRICATING ANY MATERIAL.

PROFESSIONAL ENGINEER
REGISTERED
G P ZWIEP
No. 56327
Exp. 12/31/00
CIVIL
STATE OF CALIFORNIA

REV	DESCRIPTION	DATE	BY
2	FINAL SUBMITTAL	2/24/98	GPZ
1	100% SUBMITTAL	2/9/98	GPZ

DESIGNED: G ZWIEP 1/98
DETAILS: D GASTON 1/98
CHECKED: H YEE/M HANNA 1/98
APPROVED BY Richard McBrett
PUBLIC WORKS DIRECTOR
DATE 4-17-98

CITY OF RIVERSIDE, CALIFORNIA
MK CENTENNIAL
17300 REDHILL AVE, STE 150
IRVINE, CALIFORNIA 92614

ARLINGTON AVENUE UNDERPASS
AT AT&SF RAILROAD CROSSING
BN&SF BRIDGE NO 12.4, LS #7602
DRAINAGE PLAN AND DETAILS 1

ACCOUNT NUMBER
R-3425-B
SHEET 20 OF 23

FOR REDUCED PLANS ORIGINAL SCALE IS IN MILLIMETERS 0 20 40 60 80 100

FILE: m:\1749\struct\dup_d1.dgn
PLOT TIME: 18:18:49

INDEXED 9-12-2000 GH

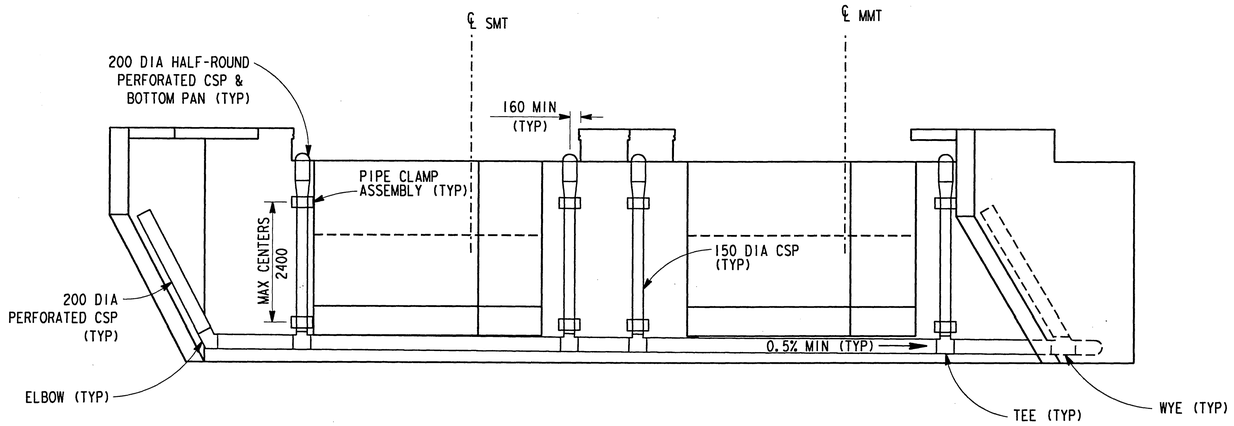

20/A ELEVATION
1:40
ABUTMENT 1 STAGE 1

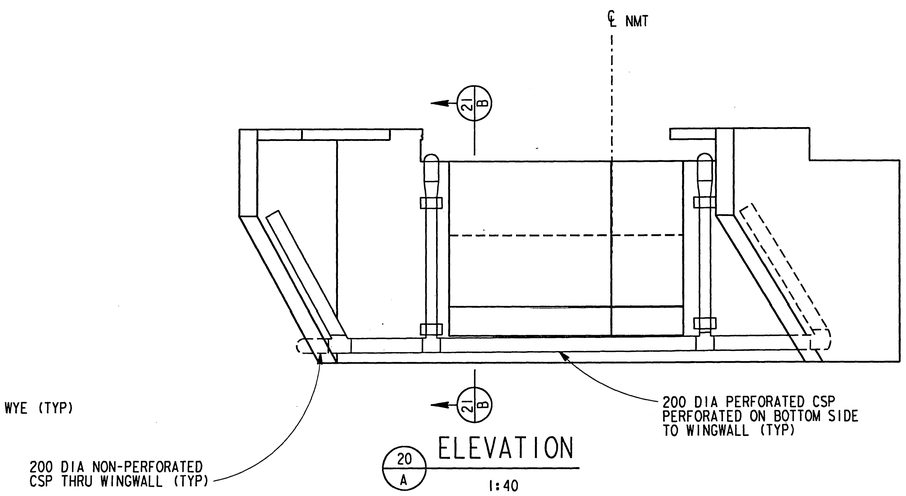

20/A ELEVATION
1:40
ABUTMENT 1 STAGE 2

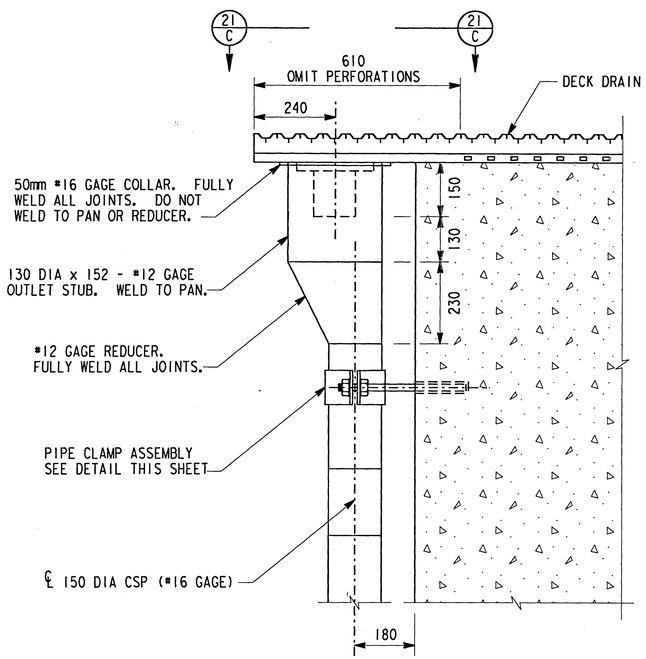

PARTIAL SECTION 20/B

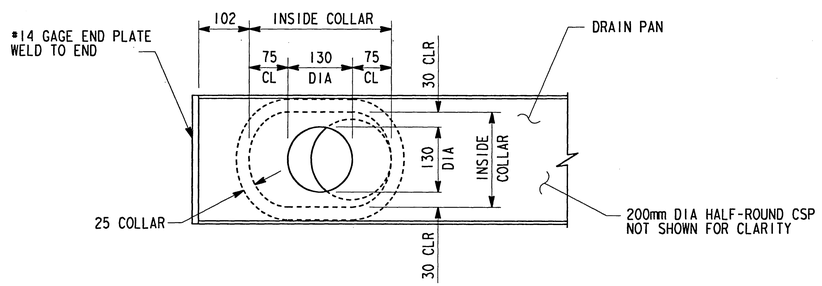

SECTION 21/C

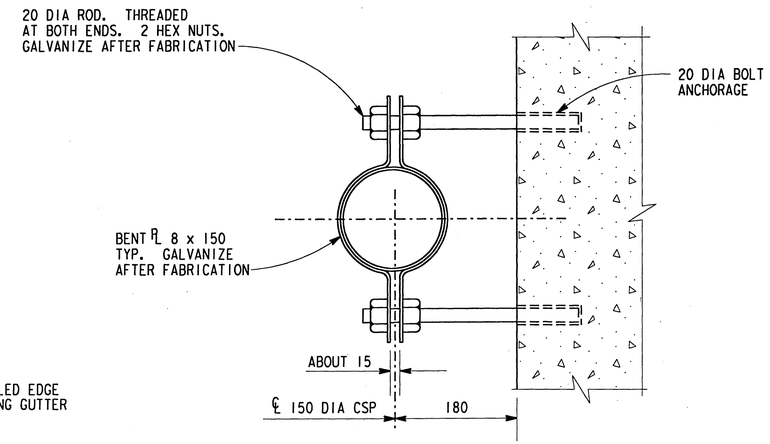

PIPE CLAMP ASSEMBLY

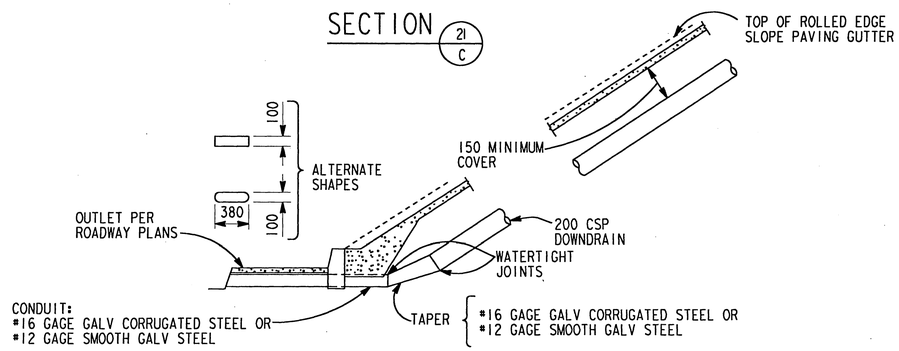

DOWNDRAIN OUTLET
NOT TO SCALE

NOTE:
20 DIA ROD FOR PIPE CLAMP ASSEMBLY SHALL BE CAREFULLY PLACED TO AVOID INTERFERENCE WITH BACKWALL REINFORCING AND DOWELS.

NOTE:
THE CONTRACTOR SHALL VERIFY ALL CONTROLLING FIELD DIMENSIONS BEFORE ORDERING OR FABRICATING ANY MATERIAL.

ALL DIMENSIONS ARE SHOWN IN MILLIMETERS UNLESS NOTED OTHERWISE.

REGISTERED PROFESSIONAL ENGINEER
G P ZWIEP
No. 56327
Exp. 12/31/00
CIVIL
STATE OF CALIFORNIA

REV	DESCRIPTION	DATE	BY
2	FINAL SUBMITTAL	2/24/98	GPZ
1	100% SUBMITTAL	2/9/98	GPZ

DESIGNED: G ZWIEP 1/98
DETAILS: D GASTON 1/98
CHECKED: H YEE/M HANNA 1/98
APPROVED BY Richard M. Scott
PUBLIC WORKS DIRECTOR
DATE 4-17-98

CITY OF RIVERSIDE, CALIFORNIA
MK CENTENNIAL
17300 REDHILL AVE, STE 150
IRVINE, CALIFORNIA 92614

ARLINGTON AVENUE UNDERPASS
AT AT&SF RAILROAD CROSSING
BN&SF BRIDGE NO 12.4, LS #7602
DRAINAGE PLAN AND DETAILS 2

ACCOUNT NUMBER
R-3425-B
SHEET 21 OF 23

FOR REDUCED PLANS ORIGINAL SCALE IS IN MILLIMETERS 0 20 40 60 80 100

INDEXED 9-12-2000 FH

FILE:m:\1749\struct\oup_d2.dgn
PLOT TIME: 18:16:27

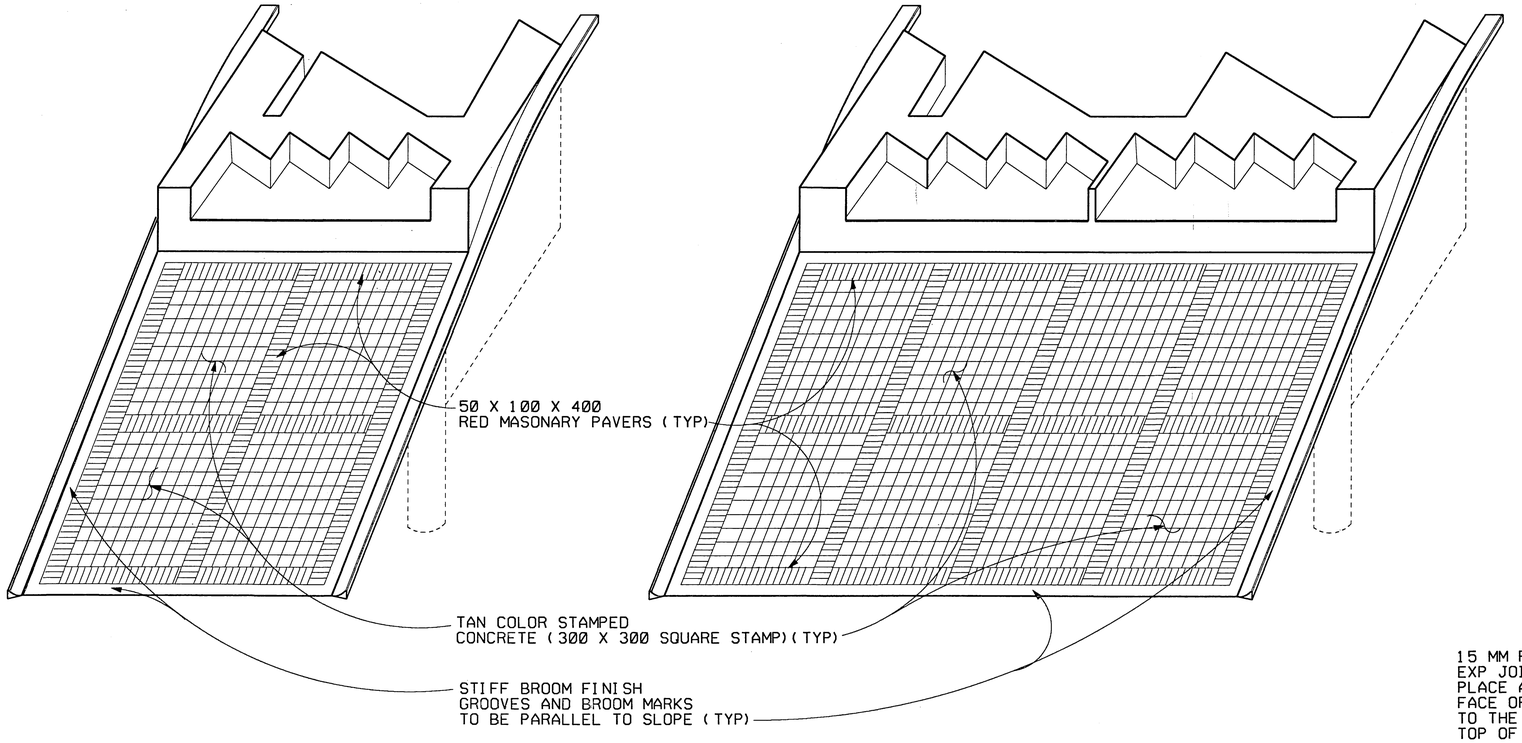

PICTORIAL VIEW OF TYPICAL INSTALLATION

NOT TO SCALE

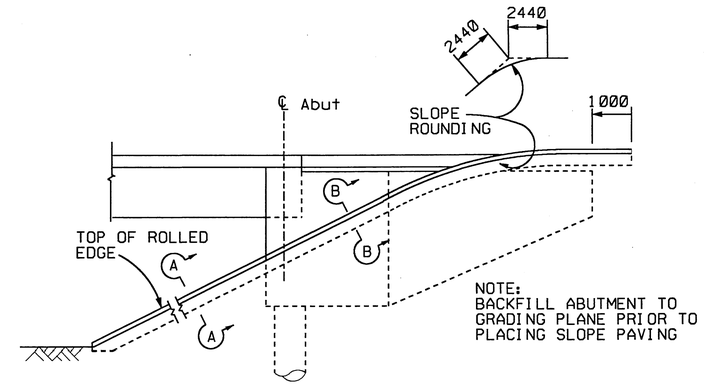

WINGWALL ELEVATION

NOT TO SCALE

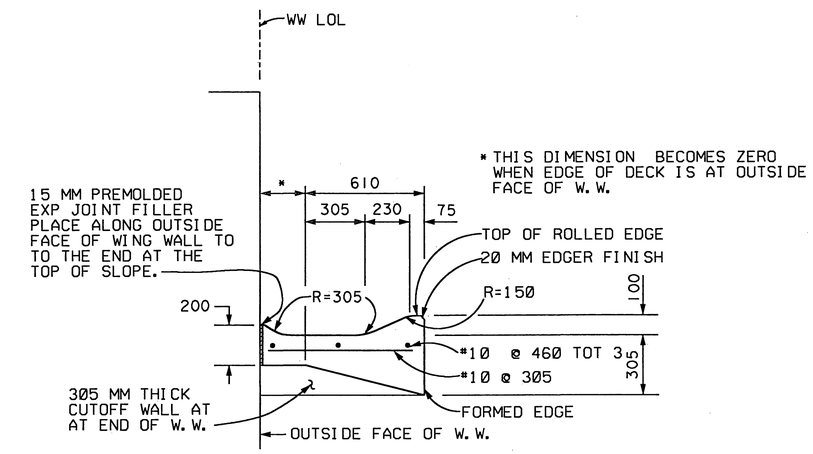

SECTION B-B

NOT TO SCALE

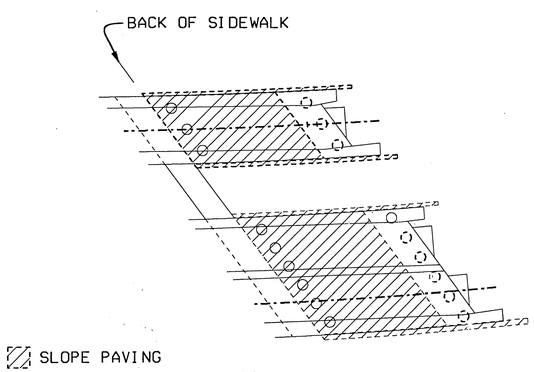

PLAN - LIMITS OF SLOPE PAVING

NOT TO SCALE

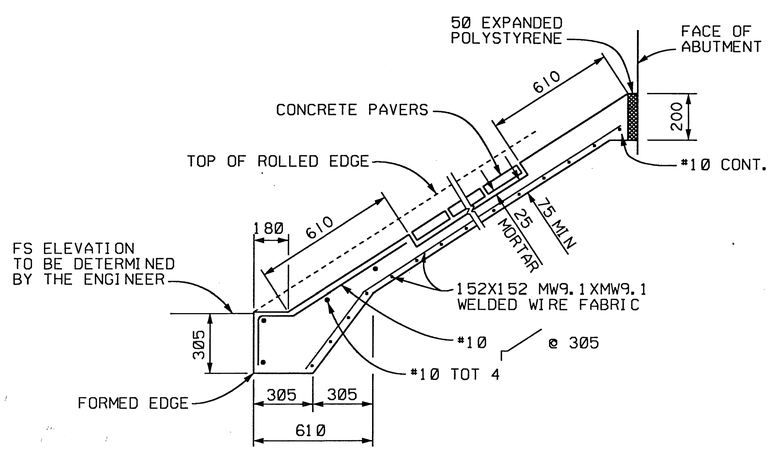

TYPICAL SECTION - CONCRETE PAVING

NOT TO SCALE

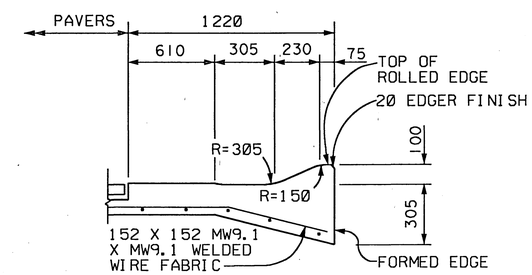

SECTION A-A

NOT TO SCALE

ALL DIMENSIONS ARE SHOWN IN MILLIMETERS UNLESS NOTED OTHERWISE.

NOTE:
THE CONTRACTOR SHALL VERIFY ALL CONTROLLING FIELD DIMENSIONS BEFORE ORDERING OR FABRICATING ANY MATERIAL.

REGISTERED PROFESSIONAL ENGINEER
W L YEE
No. 54757
Exp. 12/31/99
CIVIL
STATE OF CALIFORNIA

REV	DESCRIPTION	DATE	BY
2	FINAL SUBMITTAL	2/24/98	HLY
1	100% SUBMITTAL	2/9/98	HLY

DESIGNED: H. YEE 5/97
DETAILS: G ZWIEP/D GASTON 5/97
CHECKED: 5/97
APPROVED BY Richard McGrath
PUBLIC WORKS DIRECTOR
DATE 4-17-98

CITY OF RIVERSIDE, CALIFORNIA
MK CENTENNIAL
17300 REDHILL AVE. STE 150
IRVINE, CALIFORNIA 92614

ARLINGTON AVENUE UNDERPASS
AT AT&SF RAILROAD CROSSING
BN&SF BRIDGE NO 12.4, LS #7602
SLOPE PAVING DETAILS

ACCOUNT NUMBER
R-3425-B
SHEET 22 OF 23

FOR REDUCED PLANS ORIGINAL SCALE IS IN MILLIMETERS 0 20 40 60 80 100

FILE: mi\1749\struct\aup_spdl.dgn
PLOT TIME: 17:16:05

INDEXED 9-12-2000 LHH

REQ. NO:	REQUEST ID.:	LINE SEG.:	MILE POST:	DELIVERY DATE FEB XX, 1998

SHIP TO:	SEND SHIPPING PAPERS TO:		
BNSF RAILWAY CO. %: David M. Gosney SUPERVISOR STRUCTURES Riverside, CA. (760) 255-7766	David M. Gosney BNSF RAILWAY SUPERVISOR STRUCTURES 200 N AVE H Barstow, CA. 92311	ACCT: 1120 WORK RESON: 130 LOC. NO.: 481150 AUTH:	COST CLASS: 319 COST CTR.: 14813 TAX CODE: 48 P.O. NO.:

SIGNATURE MIKE POWRIE TITLE ASS'T. DIRECTOR STRUCTURES DESIGN DATE

BILL OF MATERIALS

LINE	QUAN	UNIT	DESCRIPTION	MARK	SIZE	LENGTH	REMARKS
1	100,000	LBS					
2							
3							
4							
5							
6							
7							
8							
9							
10							
11							
12							
13							
14							
15							
16							
17							
18							
19							
20							
21							
22							
23							
24							
25							
26							
27							
28							
29							
30							
31							
32							
33							
34							
35							
36							
37							
38							
39							
40							
41							
42							
43							
44							
45							
46							
47							
48							
49							
50							
51							
52							
53							
54							

FINAL BILL OF MATERIAL TO BE DETERMINED BY CONTRACTOR

SUPERVISOR STRUCTURES TO FURNISH: ORGANIC ZINC RICH PAINT, TIMBER PRESERVATIVE, BRACKETS BZA. BEARING BLOCK BRACE, GROUT AND BRIDGE NO. SIGN HARDWARE AND MISC. MATERIAL AS REQUIRED.

NOTE:
THE CONTRACTOR SHALL VERIFY ALL CONTROLLING FIELD DIMENSIONS BEFORE ORDERING OR FABRICATING ANY MATERIAL.

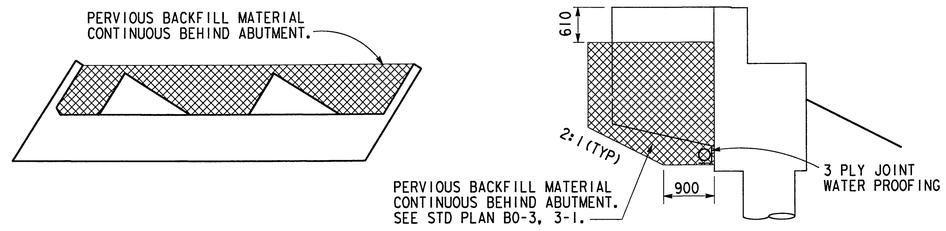

PLAN SECTION

PERVIOUS BACKFILL DETAIL

NO SCALE
ALL ABUTMENTS SIMILAR

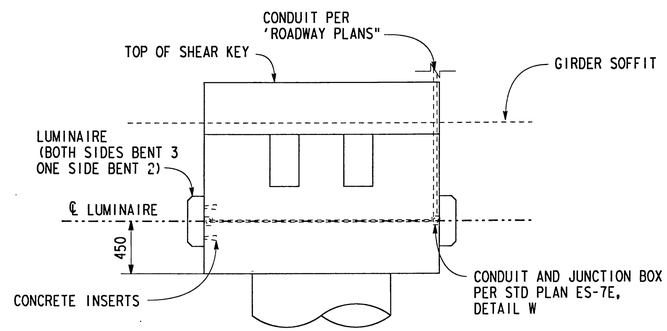

BENT 2 / BENT 3

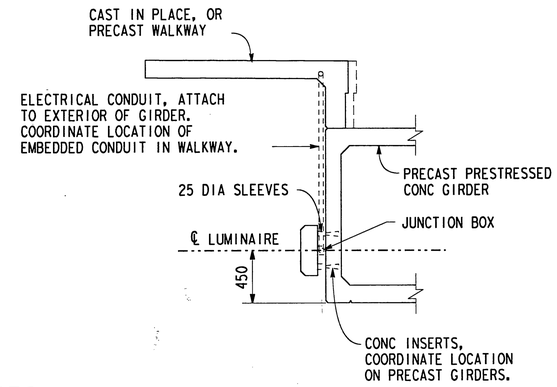

MOUNTED LUMINAIRES

NO SCALE
REFER TO STD PLAN ES-7A, ES-7B, ES-7C, ES-7D

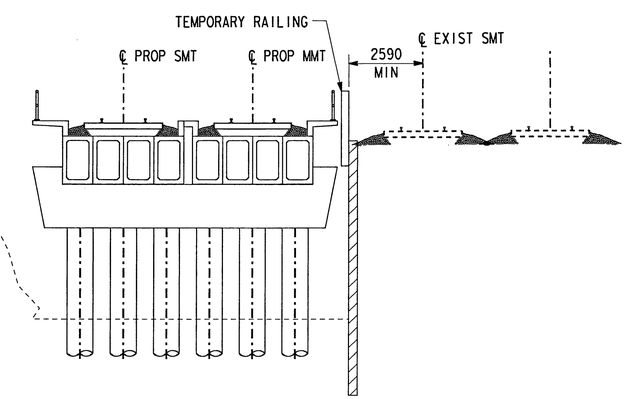

STAGE I TEMPORARY SHORING

NO SCALE
(CONTRACTOR TO DETERMINE SHORING TYPE.)

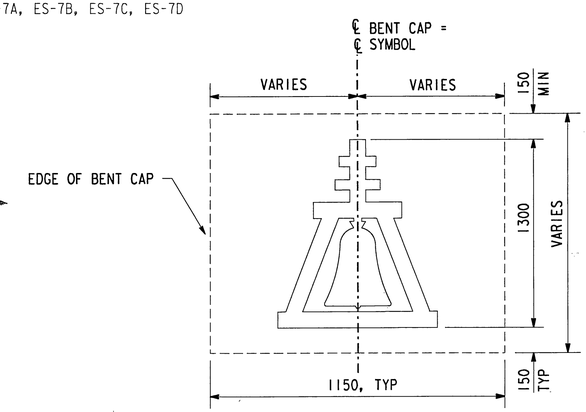

CITY OF RIVERSIDE "MISSION" SYMBOL DIAGRAM

DIMENSIONS TO BE PROVIDED BY THE CITY OF RIVERSIDE
NO SCALE

ALL DIMENSIONS ARE SHOWN IN MILLIMETERS UNLESS NOTED OTHERWISE.

REGISTERED PROFESSIONAL ENGINEER H L YEE No. 54757 Exp. 12/31/99 CIVIL STATE OF CALIFORNIA

REV	DESCRIPTION	DATE	BY
2	FINAL SUBMITTAL	2/24/98	HLY
1	100% SUBMITTAL	2/9/98	HLY

DESIGNED: H. YEE 5/97
DETAILED: G ZWIEP/D GASTON 5/97
CHECKED: I FAN/K FLECK 5/97
APPROVED BY Richard McBrath PUBLIC WORKS DIRECTOR DATE 4-17-98

CITY OF RIVERSIDE, CALIFORNIA
MK CENTENNIAL
17300 REDHILL AVE, STE 150
IRVINE, CALIFORNIA 92614

ARLINGTON AVENUE UNDERPASS
AT AT&SF RAILROAD CROSSING
BN&SF BRIDGE NO 12.4, LS #7602
MISCELLANEOUS DETAILS

ACCOUNT NUMBER R-3425-B
SHEET 23 OF 23

FILE: m:\1749\struct\oup_mi.dgn
PLOT TIME: 17:38:39

FOR REDUCED PLANS ORIGINAL SCALE IS IN MILLIMETERS 0 20 40 60 80 100

INDEXED 9-12-2000 LFH

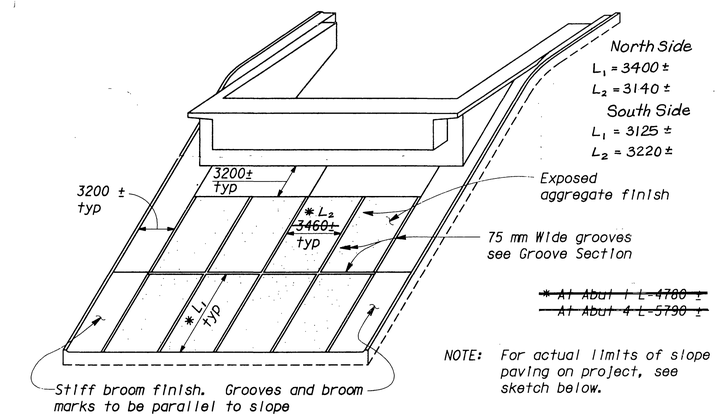

PICTORIAL VIEW OF TYPICAL INSTALLATION

No Scale

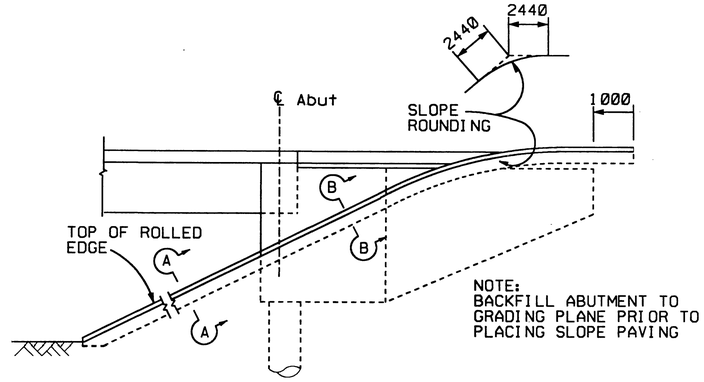

WINGWALL ELEVATION

NOT TO SCALE

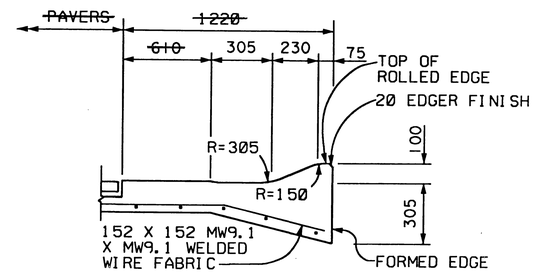

SECTION A-A

NOT TO SCALE

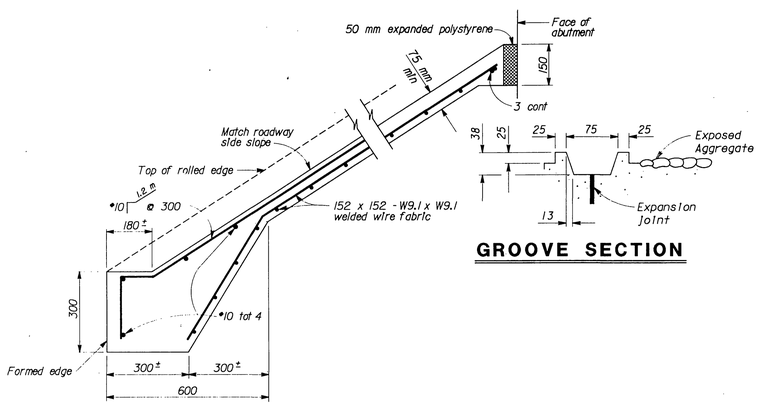

GROOVE SECTION

TYPICAL SECTION - CONCRETE PAVING

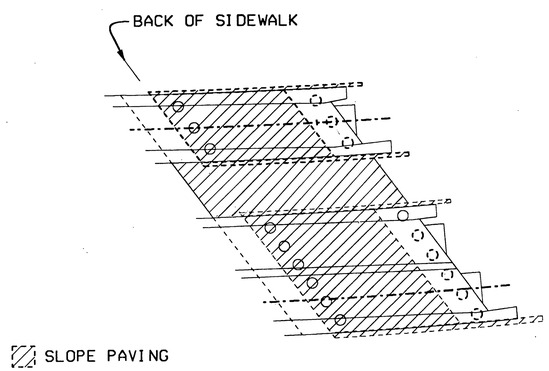

PLAN - LIMITS OF SLOPE PAVING

NOT TO SCALE

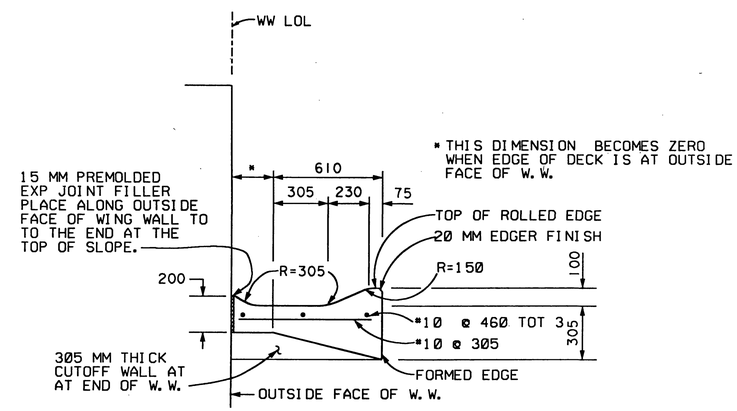

SECTION B-B

NOT TO SCALE

NOTE: THE CONTRACTOR SHALL VERIFY ALL CONTROLLING FIELD DIMENSIONS BEFORE ORDERING OR FABRICATING ANY MATERIAL.

ALL DIMENSIONS ARE SHOWN IN MILLIMETERS UNLESS NOTED OTHERWISE.

MARK	REVISIONS	APPR.	DATE

DESIGNED BY RK DRAWN BY ____ CHECKED BY ____

CITY OF RIVERSIDE, CALIFORNIA
PUBLIC WORKS DEPARTMENT

APPROVED BY	BY	DATE
DEPUTY P.W. DIRECTOR		
PRINCIPAL ENGINEER		
STREET DIVISION		
TRAFFIC DIVISION		
SURVEYOR		

APPROVED BY R. McGrath
PUBLIC WORKS DIRECTOR
DATE 1-19-99

SLOPE PAVING DETAILS
ARLINGTON AVENUE UNDERPASS
AT BNSF RAILROAD CROSSING

R-3425-B
22A of 23
SHEET

INDEXED 9-12-2000 [illegible]