PROJECT LOCATION MAPS

0 KM. 0.5 KM.
0' 250' 500' 1000' 1500' 2000' 2500' 3000'

SCALE: 1"=500'

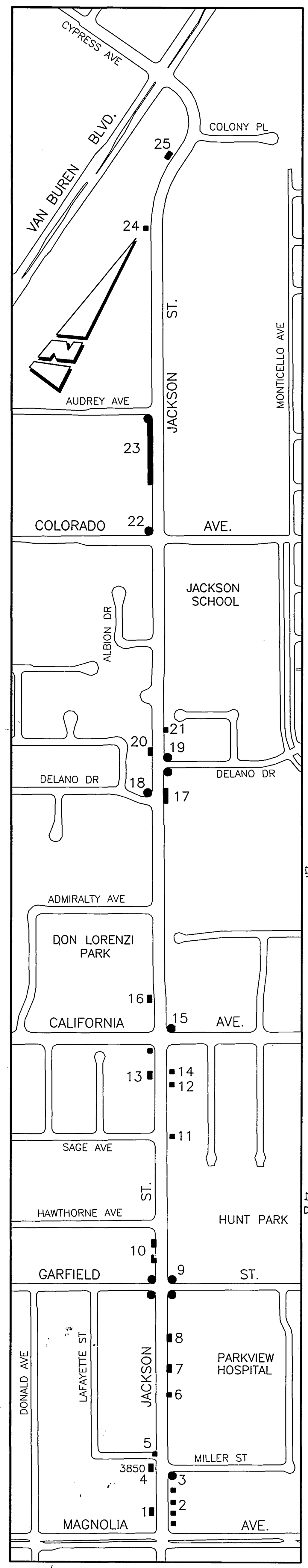

SITE NO.	LOCATION	CORNER	RAMP TYPE	R&R C&G L.F.	DRIVEWAY APPROACH S.F.	P.C.C. SW S.F.	A.C. SW S.F.	R&R SW S.F.	A.C. PAVING S.F.	MISC. CONC. S.F.	COMMENTS
1.	JACKSON W'LY SIDE 100'± N'LY OF MAGNOLIA							50			
2.	JACKSON E'LY SIDE BETWEEN MAGNOLIA & MILLER							100			4 AREAS OF 25 S.F. EACH
3.	JACKSON @ MILLER	SE	3	16							
4.	3850 JACKSON							50			
5.	JACKSON @ LAFAYETTE	NW								50	R&R 50 S.F. OF CONCRETE SPANDREL
6.	3885 JACKSON			14	84						2 AREAS OF 7 L.F. & 42 S.F. EACH
7.	3885 JACKSON			30				180			
8.	3975 JACKSON							180			
9.	JACKSON @ GARFIELD	NE SE SW NW	1 3	17 30		196 20		23	75 75 75		
10.	JACKSON W'LY SIDE BETWEEN GARFIELD & HAWTHORNE			60	360						R&R (2) EXIST. CONC. DRIVEWAY APPROACHES WITH STD. 302, TYPE IV, DRIVEWAY APPROACHES.
11.	4125 JACKSON							25			
12.	4165 JACKSON							25			
13.	4174 JACKSON							75			
14.	4175 JACKSON							25			
15.	JACKSON @ CALIFORNIA	NE SW	1			68		20			
16.	JACKSON W'LY SIDE 200'± N'LY OF CALIFORNIA							60			
17.	4395 JACKSON		3	76	150	204			332	300	SEE DETAIL SHEET 2
18.	JACKSON @ DELANO W'LY	NW	3	16							
19.	JACKSON @ DELANO E'LY	NE SE	3 3	26 26							
20.	JACKSON W'LY SIDE 250'± N'LY OF DELANO W'LY							60			
21.	JACKSON W'LY SIDE 150'± N'LY OF DELANO E'LY							36			
22.	JACKSON @ COLORADO	NW							75		
23.	JACKSON @ AUDREY	SW	2				2330				SEE PLAN SHEET 3 CURB AC S/W
24.	4850 JACKSON				25						
25.	4920 JACKSON							50			
26.	7200 ARLINGTON							80			4 AREAS OF DAMAGED S/W
27.	7145 ARLINGTON							8			DAMAGED S/W AT WATER METER
28.	7107 ARLINGTON		2								R&R EXIST. RAMP @ WEST SIDE OF DRIVEWAY
29.	7079 ARLINGTON							24			
30.	7079 ARLINGTON							48			BACK OF EXIST. CATCH BASIN
31.	7044 ARLINGTON							50			
~~32.~~	~~ARLINGTON S'LY SIDE 350' ± W'LY OF MONROE~~						~~2000~~				~~ALSO NEED 400 L.F. OF A.C. BERM~~
33.	ARLINGTON @ MONROE	SE	1	14							CENTER RAMP @ EXIST. CROSSWALKS
34.	6890 AIRPORT					42		123			WORK ON ARLINGTON --- 3 AREAS OF R & R
35. (⚠ ADD)	6892-6902 ARLINGTON						960				NARROW S/W THROUGH AREA OF THE 2 EUCALYPTUS TREES
~~36.~~ (DELETE)	~~6758-6818 ARLINGTON~~						~~1220~~				
~~37.~~	~~6750 ARLINGTON~~						~~290~~				
~~38.~~	~~6700 ARLINGTON~~						~~340~~				
~~39.~~	~~6644 ARLINGTON~~						~~1315~~				
40.	6362 & 6386 ARLINGTON						100				R & R EXIST. A.C. WALKWAY -- VARIOUS DAMAGED AREAS
41.	5984 ARLINGTON							45			
42.	5883 ARLINGTON						1570				
43.	5870 - 5880 ARLINGTON					720					
44.	5860 ARLINGTON					300					
45.	5850 ARLINGTON				216		350				
46.	5843 ARLINGTON						225				
47.	5840 ARLINGTON				85		160				
48.	5835 ARLINGTON				85		130				
49.	5827 ARLINGTON						265				2 AREAS
50.	5820 ARLINGTON				85		675				2 AREAS
51.	5819 ARLINGTON				190		190				2 AREAS OF A.C. WALKWAY - R&R 2 EXIST. D/W'S
52.	5803 ARLINGTON			17			210				CLOSE UNUSED DRIVEWAY
53.	5793 ARLINGTON						375				
54.	ARLINGTON @ ARBOR	NE NW	3 3	20 20							
55.	5769 ARLINGTON				115		245				
56.	5760 ARLINGTON					1					KNOCKOUT IN SIDEWALK @ BUS STOP
57.	5751 ARLINGTON						320				
58.	5745 ARLINGTON				100		315				R&R D/W APPROACH TO MATCH PROPOSED A.C. SIDEWALK
59.	5770 ARLINGTON	E & W	2	28				40			2 RAMPS @ DRIVEWAY --- SEE DETAIL SHEET 4
~~60.~~ (DELETE)	~~5785 ARLINGTON~~							~~65~~			
~~61.~~ (DELETE)	~~5665, 5685 & 5695 ARLINGTON~~						~~765~~				
62.	5623 ARLINGTON							114			
63.	5615 ARLINGTON					330					
64.	5555 ARLINGTON							66			
	SUBTOTALS		15	410	1,495	1881	~~14,350~~ 7,750	1,622	632	350	

SITE NO.	LOCATION	CORNER	RAMP TYPE	R&R C&G L.F.	DRIVEWAY APPROACH S.F.	P.C.C. SW S.F.	A.C. SW S.F.	R&R SW S.F.	A.C. PAVING S.F.	MISC. CONC. S.F.	COMMENTS
65. (⚠ ADD)	5475 ARLINGTON							27			
66.	ARLINGTON @ JEFFERSON	SE	2	11		190					SEE DETAIL SHEET 4
67.	ARLINGTON S'LY SIDE JEFFERSON E'LY 400' ±							355			6 AREAS OF VARIOUS SIZES ALONG SCHOOL FRONTAGE
68.	5415 ARLINGTON				10						R&R PORTION OF EXISTING CONCRETE D/W APPROACH
69.	5305 ARLINGTON							35			
70.	ARLINGTON @ STREETER	SE	1	16							R&R EXISTING RAMP
71.	ARLINGTON E'LY OF STREETER			10							R&R 10 L.F. OF C&G @ BUS STOP
72.	5033 ARLINGTON							14			
73.	5013 ARLINGTON							56			
74.	5012 ARLINGTON				56			49			R&R PORTION OF EXISTING CONCRETE D/W APPROACH
75.	4811 & 4821 ARLINGTON					945					
76.	4811 ARLINGTON					67					
77.	4780 ARLINGTON							49			
78.	4760 ARLINGTON							161			2 AREAS - 1 OF 49 S.F. AND 1 OF 112 S.F.
79.	4757 ARLINGTON							98			
80.	4752 ARLINGTON							49			
81.	ARLINGTON S'LY SIDE EL HIJO E'LY 200' ±					1038					CONST. VAR. HEIGHT RET. CURB AT BACK OF SIDEWALK AS DIRECTED BY ENGINEER. REL. FENCE & REMOVE 1 TREE
82.	4709 ARLINGTON					330			242		INSTALL 51± L.F. C&G ------ SEE DETAIL SHEET 4
83.	ARLINGTON S'LY SIDE EL PADRO W'LY 200' ±			20		1236		120			REMOVE 6 CLASS I TREES & VARIOUS BUSHES. CONST. VARIABLE HEIGHT RETAINING CURB AT BACK OF SIDEWALK AS DIRECTED BY ENGINEER
84.	6979 PALM CT.									86	WORK IS ON ARLINGTON. RELOCATE 1 ST. LIGHT, CONST. 28± L.F. 6" STD. 200 TYPE II CURB & 1 CONCRETE STEP SEE DETAIL SHEET 4
85.	8151 ARLINGTON							6			
86.	7951 ARLINGTON							48			
87.	7911 ARLINGTON							72			
88.	7671 ARLINGTON							306			2 AREAS OF SIDEWALK R&R.
89.	ARLINGTON S'LY SIDE E'LY OF DRAINAGE CHANNEL			26				156			CLOSE EXISTING DRIVEWAY
90.	7633 ARLINGTON				228						
91.	7601 ARLINGTON				204						
92.	7601-7633 ARLINGTON							276			
93.	7549 ARLINGTON				96			672			
94.	7531 ARLINGTON				180						
95.	7525 ARLINGTON				276						R&R EXISTING A.C. D/W APPROACH
96.	7509 ARLINGTON				276						R&R EXISTING A.C. D/W APPROACH
97.	7475 ARLINGTON				270	30					R&R EXISTING A.C. D/W APPROACH
98.	7475-7525 ARLINGTON							378			
99.	7560 ARLINGTON					1230					
100.	ARLINGTON @ HAROLD	SW SE	2 2	14 14		168 156					
101.	ARLINGTON S'LY SIDE E'LY OF HAROLD					1476					END SIDEWALK @ W'LY SIDE OF DRIVEWAY
102.	ARLINGTON N'LY SIDE W'LY OF VAN BUREN				186		246				
103.	3779 ARLINGTON							8			
104.	3771 ARLINGTON							55			
105.	3759 ARLINGTON							50			
106.	3751-3755 ARLINGTON					230					
107.	3747 ARLINGTON				30	168					R&R PORTION OF EXISTING DRIVEWAY APPROACH
108.	3739 ARLINGTON					85					
109.	3660 ARLINGTON				85						R&R PORTION OF EXISTING DRIVEWAY APPROACH
110.	3650 ARLINGTON							55			
111.	3603 ARLINGTON							24			
112.	3593 ARLINGTON			21				84			CLOSE EXISTING DRIVEWAY APPROACH
113.	3579 ARLINGTON							352			
114.	6859 ARLINGTON										SEE SHEET 5 FOR PROPOSED WORK
	SUBTOTALS		~~4~~ 3	~~142~~ 131	1,867	~~7,349~~ 7,159	246	3,555	242	86	
	TOTALS		~~19~~ 18	~~552~~ 541	3,362	~~9,230~~ 9,040	~~14,596~~ 7,996	5,177	874	436	

GENERAL CONSTRUCTION NOTES

1. CONSTRUCTION SHALL BE IN ACCORDANCE WITH THE CITY OF RIVERSIDE STANDARD DRAWINGS AND STANDARD SPECIFICATION FOR PUBLIC WORKS CONSTRUCTION, 1994 EDITION.
2. EXISTING UTILITIES SHOWN ON THIS PLAN ARE PLOTTED FROM UTILITY RECORDS. THE CONTRACTOR IS REQUIRED TO TAKE DUE PRECAUTIONARY MEASURES TO LOCATE AND PROTECT ALL UTILITIES WHETHER OR NOT SHOWN ON THIS PLAN.
3. PRIME CONTRACTORS BIDDING THIS WORK SHALL HAVE A CLASS A OR C-8 LICENSE.
4. CONFLICTING UTILITIES SHOWN WITHIN THE CONSTRUCTION AREA WILL BE RELOCATED PRIOR TO CONSTRUCTION.
5. TREES & SHRUBS AFFECTED BY PROPOSED SIDEWALK CONSTRUCTION SHALL BE TRIMMED TO AT LEAST 8' VERTICALLY ABOVE THE SIDEWALK SURFACE AND TO AT LEAST 3' LATERALLY OF THE SIDEWALK, WHERE RIGHT-OF-WAY PERMITS.
6. MAILBOXES INTERFERING WITH PROPOSED SIDEWALK CONSTRUCTION SHALL BE TEMPORARILY RELOCATED TO ENABLE PROPERTY OWNERS TO RECEIVE THEIR MAIL AND BE REINSTALLED IN FINAL POSITION BY THE CONTRACTOR.
7. WATER METER VAULTS, GAS METER VAULTS, STREET LIGHT PULL BOXES, AND TRAFFIC SIGNAL PULL BOXES AFFECTED BY CONSTRUCTION SHALL BE ADJUSTED TO THE PROPOSED SIDEWALK GRADE.
8. EXISTING SPRINKLERS AND IRRIGATION LINES AFFECTED BY THE CONSTRUCTION OF THE PROPOSED SIDEWALK SHALL BE RELOCATED TO THE BACK OF THE SIDEWALK.

SPECIFIC CONSTRUCTION NOTES

(hexagon) NUMBERS ABOVE 100 IN A HEXAGON ON THE PLAN REFER TO THE RESPECTIVE STANDARD DRAWING AND SHALL BE CONSTRUCTED ACCORDINGLY, UNLESS MODIFICATIONS ARE NOTED ON THE PLAN OR COVER SHEET. ANY NUMBER SHOWN BELOW THE STANDARD DRAWING NUMBER INDICATES THE SPECIFIC ALTERNATE TO BE CONSTRUCTED.

A88/C — STATE OF CALIFORNIA, BUSINESS AND TRANSPORTATION AGENCY, DEPT. OF TRANSPORTATION., STANDARD PLANS, DATED JULY 1992, REVISED MAY 29, 1996.

A — INDICATES DETAIL
3 — INDICATES SHEET NO.

R/S1 — REMOVE AND REPLACE EXISTING STRUCTURAL SECTION WITH FULL DEPTH OR MIN. 6" DENSE GRADED ASPHALT CONCRETE.

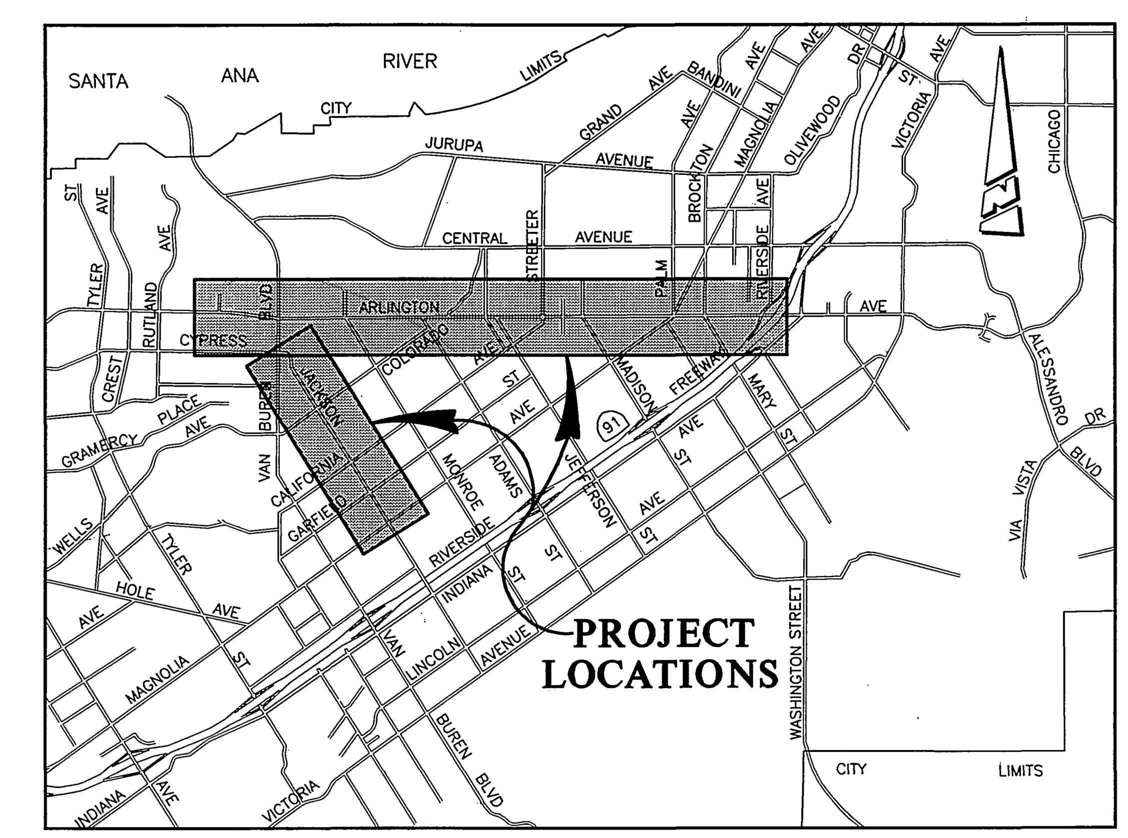

VICINITY MAP

0 KM. 1 KM. 5 KM 10 KM.
0' 3,000' 6,000' 12,000' 18,000' 24,000' 30,000' 36,000'

SCALE : 1" = 6,000'

PC-3962-S

RAMP LEGEND

TYPE 1 – CITY OF RIVERSIDE STANDARD DRAWING NO. 304.
TYPE 2 – ONE DIRECTIONAL RAMP PER DETAIL A SHEET NO. 3.
TYPE 3 – STANDARD PLAN NSP-A88 CASE C PER STATE OF CALIFORNIA, BUSINESS AND TRANSPORTATION AGENCY, DEPARTMENT OF TRANSPORTATION, STANDARD PLANS DATED JULY 1992, REVISED MAY 29, 1996.

IMPORTANT NOTICE
Section 4216/4217 of the Government Code requires a Dig Alert Identification Number to be issued before a "Permit to Excavate" will be valid. For your Dig Alert I.D. Number call —
CALL TOLL FREE
48 HOURS BEFORE YOU DIG
UNDERGROUND SERVICE ALERT
1-800-227-2600

ENGINEER IN RESPONSIBLE CHARGE
MICHAEL KATUSIAN
R.C.E. No. 36686 expires 6/30/00
DATE 8/8/97

REGISTERED PROFESSIONAL ENGINEER — MICHAEL KATUSIAN — No. 36686 Exp. 6-30-00 — CIVIL — STATE OF CALIFORNIA

MARK	REVISIONS	APPR.	DATE
⚠1	ADDED & DELETED WORK LOCATIONS.	MK	1/13/98

DESIGNED BY R.G.F., L.C., & F.P. DRAWN BY V.L.T., L.F.H. & F.P. CHECKED BY

CITY OF RIVERSIDE, CALIFORNIA
PUBLIC WORKS DEPARTMENT

APPROVED BY	BY	DATE
DEPUTY P.W. DIRECTOR		
PRINCIPAL ENGINEER		
STREET SERVICES		8-8-97
SURVEYOR	—	—
TRAFFIC DIVISION		8/6/97
PARKS DEPARTMENT		8-6-97

APPROVED BY
PUBLIC WORKS DIRECTOR
DATE 8/8/97

ACCESSIBLE FOOTPATH PHASE IV

SCALE: 1" = AS SHOWN

ACCT. NO. 220-511200-453002-12053

R-3435

SHEET 1 OF 5

INDEXED 9/10/97

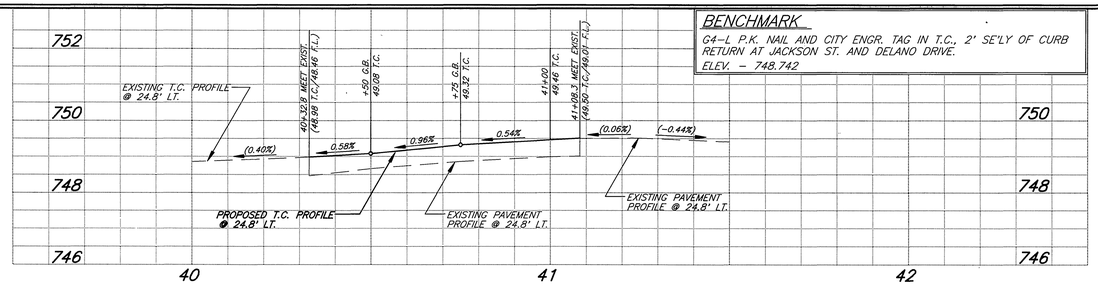

BENCHMARK

G4–L P.K. NAIL AND CITY ENGR. TAG IN T.C., 2' SE'LY OF CURB RETURN AT JACKSON ST. AND DELANO DRIVE.
ELEV. – 748.742

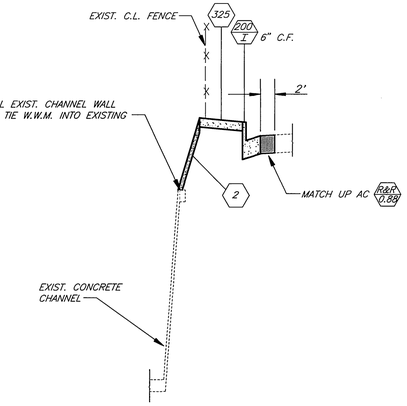

SECTION A–A
N.T.S.

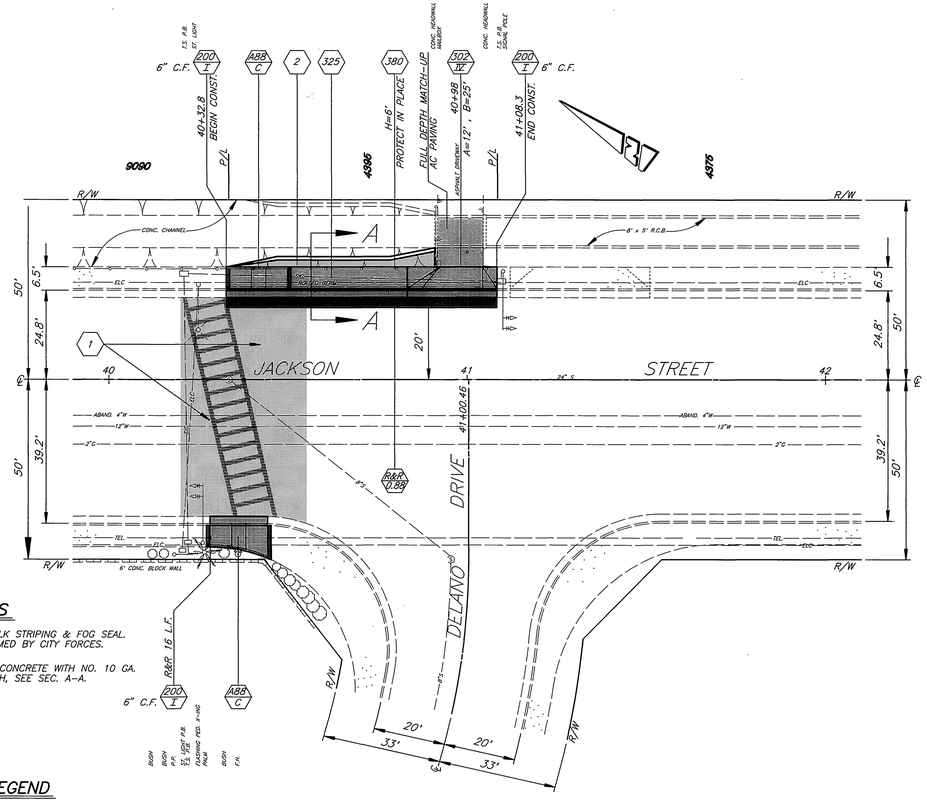

CONSTRUCTION NOTES

1. REMOVE EXISTING CROSSWALK STRIPING & FOG SEAL. RESTRIPING TO BE PERFORMED BY CITY FORCES.
2. CONSTRUCT 3 1/2" THICK CONCRETE WITH NO. 10 GA. 4" x 4" WELDED WIRE MESH, SEE SEC. A–A.

CONSTRUCTION LEGEND

R&R 0.88 — REMOVE AND REPLACE EXIST. STRUCTURAL SECTION WITH 0.88' FULL DEPTH D.G.A.C. OVER COMPACTED NATIVE SOIL.

4395 JACKSON

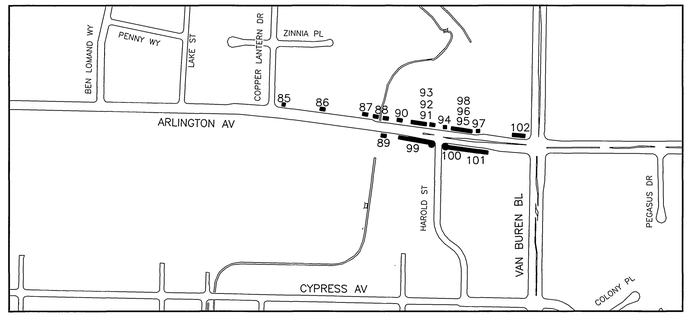

MATCHLINE SEE SHEET 1 LEFT

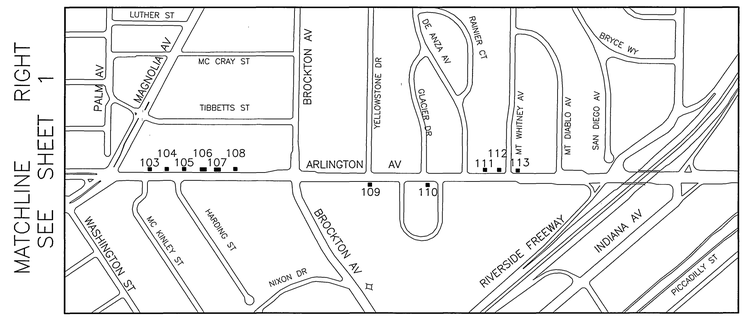

MATCHLINE SEE SHEET 1 RIGHT

PROJECT LOCATION MAPS

0 KM. 0.5 KM.
0' 250' 500' 1000' 1500' 2000' 2500' 3000'

SCALE: 1"=500'

IMPORTANT NOTICE
Section 4216.4(2)T of the Government Code requires a Dig Alert Identification Number to be issued before a "Permit to Excavate" will be valid. For your Dig Alert I.D. Number call
CALL TOLL FREE
48 HOURS BEFORE YOU DIG
UNDERGROUND SERVICE ALERT
1-800-227-2600

ENGINEER IN RESPONSIBLE CHARGE
Michael Katusian
MICHAEL KATUSIAN
R.C.E. No. 36686 expires 6/30/00
DATE 8/8/97

REGISTERED PROFESSIONAL ENGINEER — MICHAEL KATUSIAN — No. 36686 Exp. 6-30-00 — CIVIL — STATE OF CALIFORNIA

MARK	REVISIONS	APPR.	DATE

DESIGNED BY RGC, L.C. & F.P. DRAWN BY MC, LSN & FP CHECKED BY

CITY OF RIVERSIDE, CALIFORNIA
PUBLIC WORKS DEPARTMENT

APPROVED BY	BY	DATE
DEPUTY P.W. DIRECTOR		
PRINCIPAL ENGINEER		
STREET SERVICES	RGC	8-8-97
SURVEYOR		
TRAFFIC DIVISION	JR	8/4/97
PARKS DEPARTMENT	PRC	8-6-97

APPROVED BY
PUBLIC WORKS DIRECTOR
DATE 8/8/97

ACCESSIBLE FOOTPATH PHASE IV
JACKSON STREET

HORIZ. SCALE: 1" = 20' VERT. SCALE: 1" = 2'

ACCT. NO. 220-511200-453002-12053

R-3435

SHEET 2 OF 5

PC-3962-S

INDEXED 9-10-97 GH

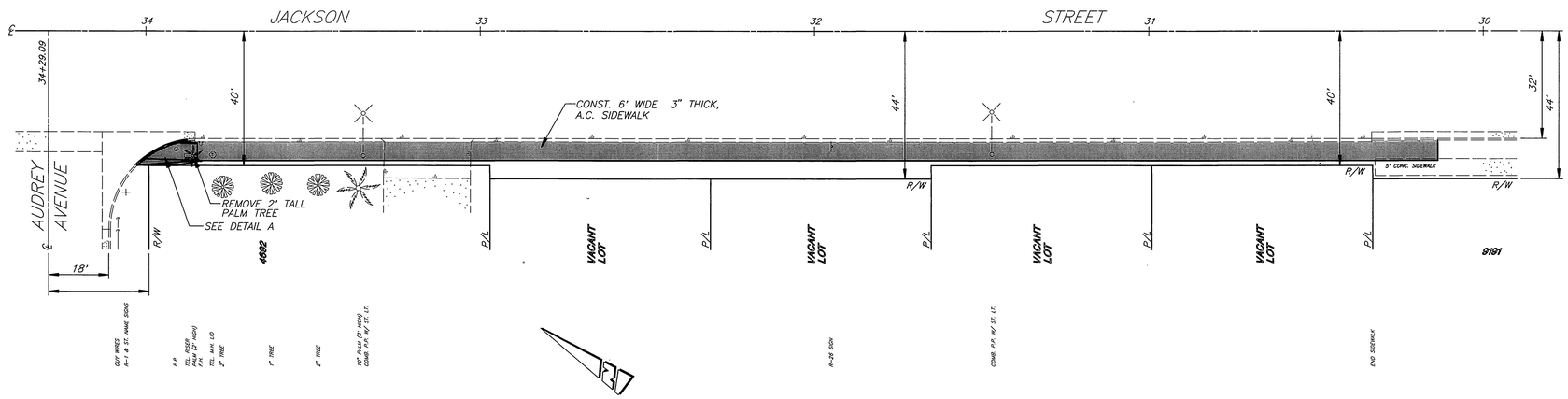

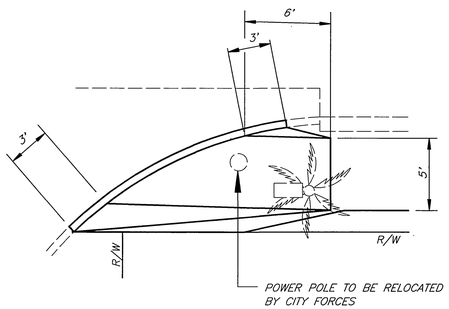

DETAIL A
N.T.S.

IMPORTANT NOTICE
Section 4216/4217 of the Government Code requires a Dig Alert Identification Number to be issued before a Permit to Excavate will be valid. For your Dig Alert I.D. Number call
CALL TOLL FREE
48 HOURS BEFORE YOU DIG
UNDERGROUND SERVICE ALERT
1-800-227-2600

ENGINEER IN RESPONSIBLE CHARGE
MICHAEL KATUSIAN
R.C.E. No. 36686 expires 6/30/00
DATE 8/8/97

REGISTERED PROFESSIONAL ENGINEER
MICHAEL KATUSIAN
No. 36686
Exp. 6-30-00
CIVIL
STATE OF CALIFORNIA

MARK	REVISIONS	APPR.	DATE

DESIGNED BY R.G.F., L.C. & F.P. DRAWN BY M.K. LIN & F.P. CHECKED BY

CITY OF RIVERSIDE, CALIFORNIA
PUBLIC WORKS DEPARTMENT

APPROVED BY	BY	DATE
DEPUTY P.W. DIRECTOR		
PRINCIPAL ENGINEER		
STREET SERVICES	RC	8-8-97
SURVEYOR		
TRAFFIC DIVISION		8/16/97
PARKS DEPARTMENT		8-8-97

APPROVED BY
PUBLIC WORKS DIRECTOR
DATE 8/8/97

ACCESSIBLE FOOTPATH PHASE IV
JACKSON STREET

HORIZ. SCALE: 1" = 20' VERT. SCALE: 1" = 2'

ACCT. NO. 220-511200-453002-12053

R-3435

SHEET 3 OF 5

PC-3962-S

INDEXED 9-10-97 GH

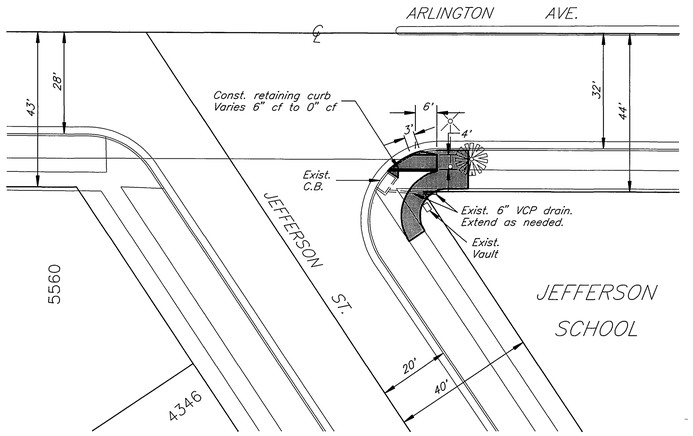

ARLINGTON @ JEFFERSON

SCALE: 1" = 20'

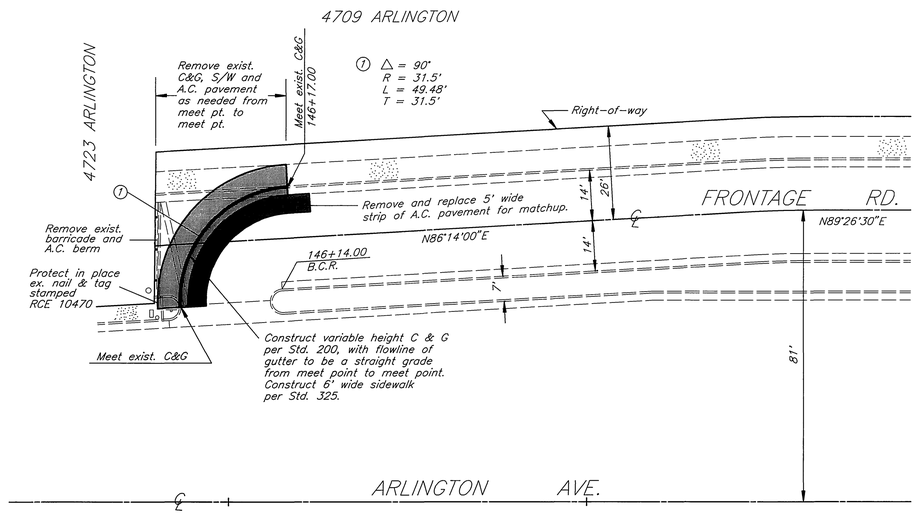

4709 ARLINGTON AVE.

SCALE: 1" = 20'

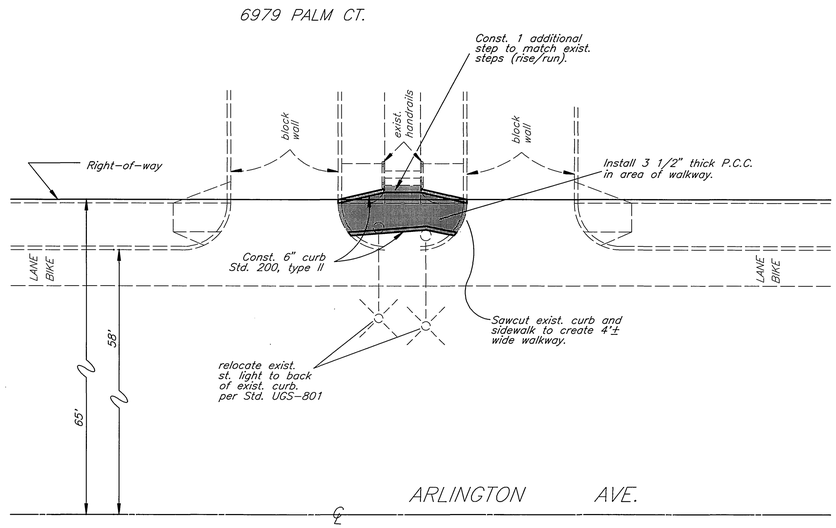

6979 PALM CT.

SCALE: 1" = 10'

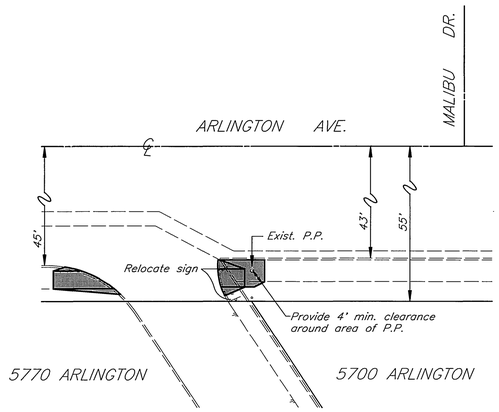

5770 ARLINGTON AVE.

SCALE: 1" = 20'

IMPORTANT NOTICE
Section 4216/4217 of the Government Code requires a Dig Alert Identification Number to be issued before a "Permit to Excavate" will be valid. For your Dig Alert I.D. Number call
CALL TOLL FREE
48 HOURS BEFORE YOU DIG
UNDERGROUND SERVICE ALERT
1-800-227-2600

ENGINEER IN RESPONSIBLE CHARGE
Michael Katusian
MICHAEL KATUSIAN
R.C.E. No. 36686 expires 6/30/00
DATE 9/9/97

REGISTERED PROFESSIONAL ENGINEER
MICHAEL KATUSIAN
No. 36686
Exp. 6-30-00
CIVIL
STATE OF CALIFORNIA

MARK	REVISIONS	APPR.	DATE

DESIGNED BY: FRED DRAWN BY: FRED CHECKED BY:

CITY OF RIVERSIDE, CALIFORNIA
PUBLIC WORKS DEPARTMENT

APPROVED BY	BY	DATE
DEPUTY P.W. DIRECTOR		
PRINCIPAL ENGINEER		
TRAFFIC DIVISION	JS	8/6/97
PARKS DEPARTMENT	DLS	8-6-97
CHIEF P.W. INSPECTOR		
SURVEYOR		
STREET SERVICES	RC	8-8-97

APPROVED BY: PUBLIC WORKS DIRECTOR
DATE: 8/8/97

ACCESSIBLE FOOTPATH PHASE IV
ARLINGTON AVENUE

HORIZ. SCALE: AS SHOWN

ACCT. NO. 220-511200-453002-12053

R-3435

SHEET 4 OF 5

FILE NO.

PC-3962-S

INDEXED 9-10-97 GH

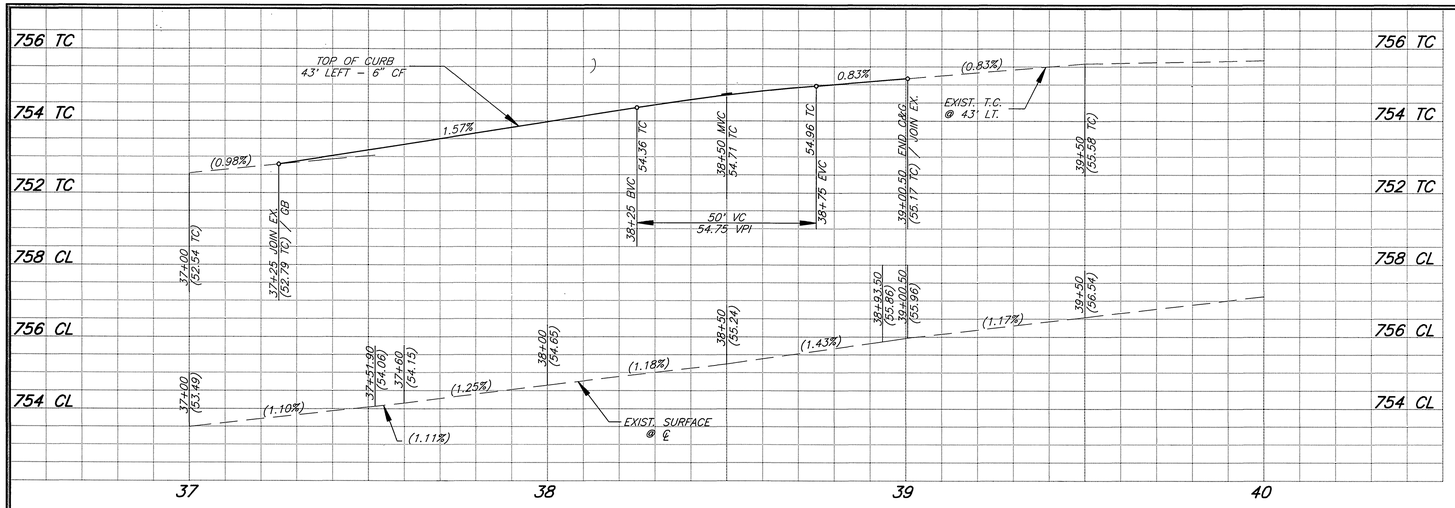

SPECIFIC CONSTRUCTION NOTES

⬢ NUMBERS ABOVE 100 IN A HEXAGON ON THE PLAN REFER TO THE RESPECTIVE STANDARD DRAWING AND SHALL BE CONSTRUCTED ACCORDINGLY, UNLESS MODIFICATIONS ARE NOTED ON THE PLAN OR COVER SHEET. ANY NUMBER SHOWN BELOW THE STANDARD DRAWING NUMBER INDICATES THE SPECIFIC ALTERNATE TO BE CONSTRUCTED.

R / 0.5 — REMOVE AND REPLACE EXISTING A.C. PAVEMENT WITH 0.50' FULL DEPTH DGAC.

R / 0.95 — REMOVE AND REPLACE EXISTING A.C. PAVEMENT WITH 0.95' FULL DEPTH DGAC.

OL / VAR — CONSTRUCT A VARIABLE THICKNESS DGAC OVERLAY (0.10' MIN.)

TDL / 2 — INSTALL TRAFFIC DETECTOR LOOP; NUMBER OF DETECTOR LOOPS

6859 ARLINGTON

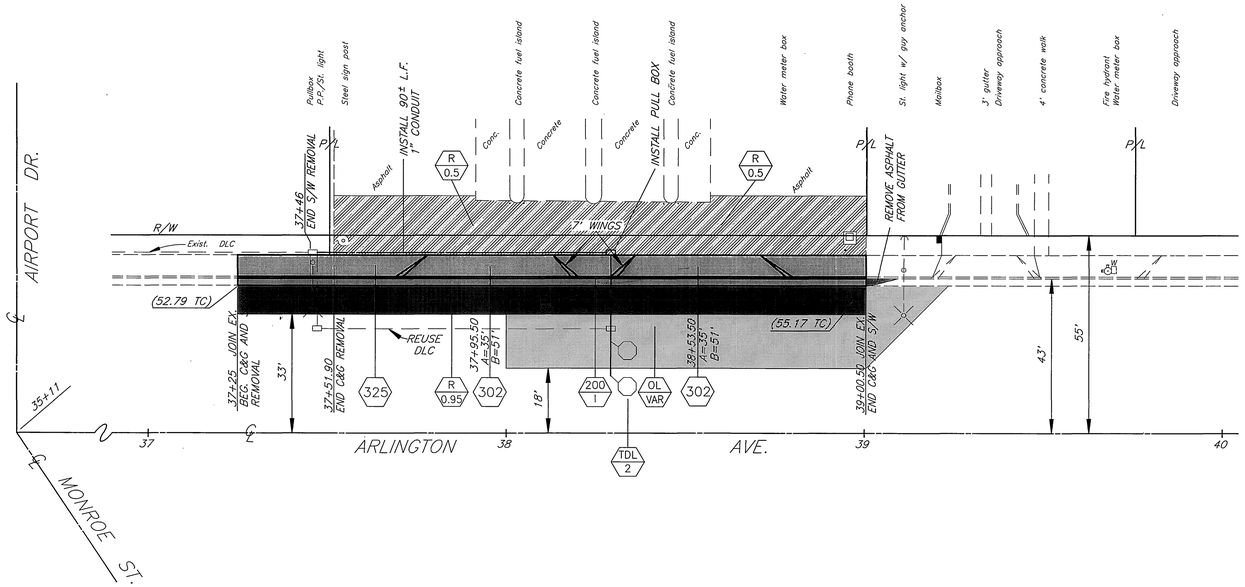

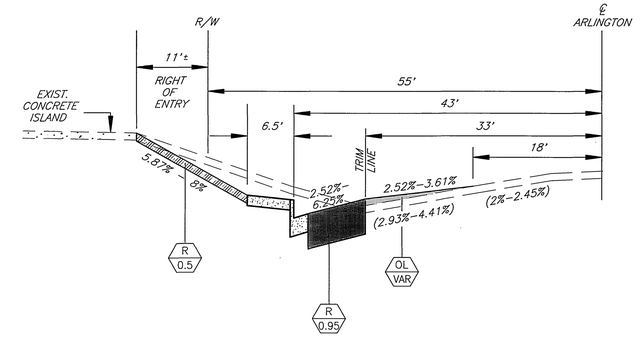

TYPICAL SECTION ARLINGTON AVE
SCALE: HORIZ 1"=10'
VERT 1"=2'

BENCHMARK (G4-D)
P.K. NAIL & CITY ENGR. TAG IN CONC. BASE OF TRAFFIC SIGNAL AT THE NW COR. OF ARLINGTON AVE. @ AIRPORT DR.
ELEV. – 749.836

IMPORTANT NOTICE
Section 4216/4217 of the Government Code requires a Dig Alert Identification Number to be issued before a "Permit to Excavate" will be valid. For your Dig Alert I.D. Number call
CALL TOLL FREE
48 HOURS BEFORE YOU DIG
UNDERGROUND SERVICE ALERT
1-800-227-2600

ENGINEER IN RESPONSIBLE CHARGE
Michael Katusian
MICHAEL KATUSIAN
R.C.E. No. 36685 expires 6/30/98
DATE 8/8/97

REGISTERED PROFESSIONAL ENGINEER MICHAEL KATUSIAN No. 36685 Exp. 6-30-98 CIVIL STATE OF CALIFORNIA

MARK	REVISIONS	APPR.	DATE

DESIGNED BY: FRED DRAWN BY: FRED CHECKED BY:

CITY OF RIVERSIDE, CALIFORNIA
PUBLIC WORKS DEPARTMENT

APPROVED BY	BY	DATE
DEPUTY P.W. DIRECTOR		
PRINCIPAL ENGINEER		
TRAFFIC DIVISION	[illegible]	8/6/97
PARKS DEPARTMENT	[illegible]	8/6/97
CHIEF P.W. INSPECTOR		
SURVEYOR		
STREET SERVICES	[illegible]	8/7/97

APPROVED BY: PUBLIC WORKS DIRECTOR
DATE: 8/8/97

ACCESSIBLE FOOTPATH PHASE IV
ARLINGTON AVENUE

ACCT. NO. 220-511200-453002-12053

R-3435

SHEET 5 OF 5

HORIZ. SCALE: 20' VERT. SCALE: 2'

FILE NO.

INDEXED 9-10-97 GH

PC-3962-S