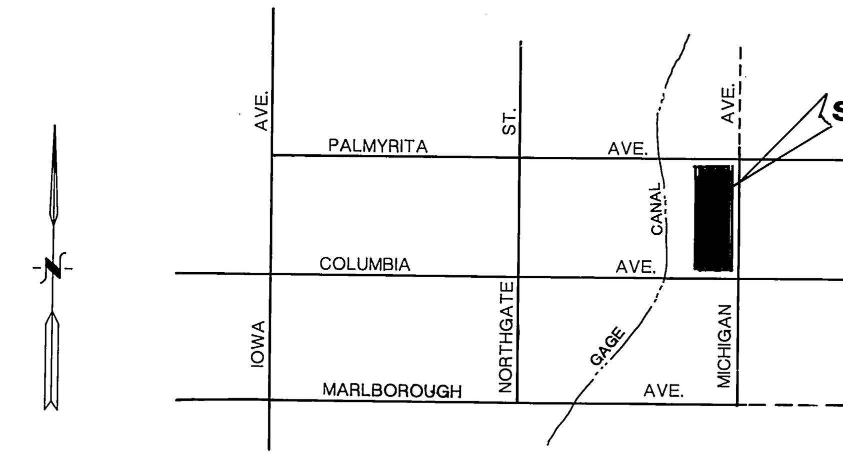

VICINITY MAP

NO SCALE

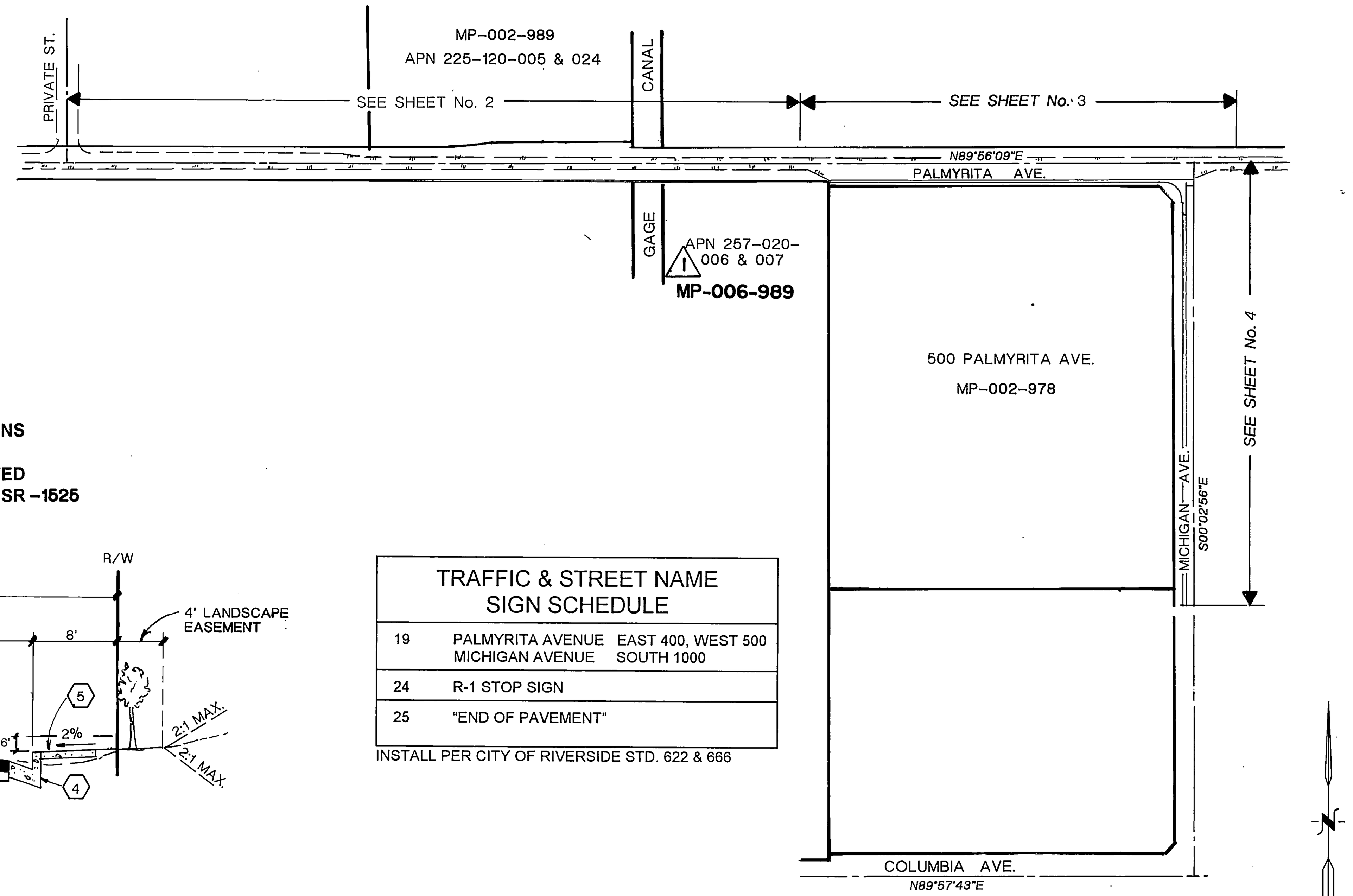

TRAFFIC & STREET NAME SIGN SCHEDULE		
19	PALMYRITA AVENUE MICHIGAN AVENUE	EAST 400, WEST 500 SOUTH 1000
24	R-1 STOP SIGN	
25	"END OF PAVEMENT"	

INSTALL PER CITY OF RIVERSIDE STD. 622 & 666

INDEX MAP

SCALE: 1" = 200'

NOTE:

1. THE FOLLOWING TYPICAL SECTIONS ARE BASED ON EXISTING CONDITIONS ON 12/18/98.
2. IF EXISTING PAVING THICKNESS IS LESS THAN 6" THEN IT SHALL BE REMOVED AND REPLACED WITH 3 ½" AC OVER 5" AGGREGATE BASE, CLASS 2 PER SR –1525

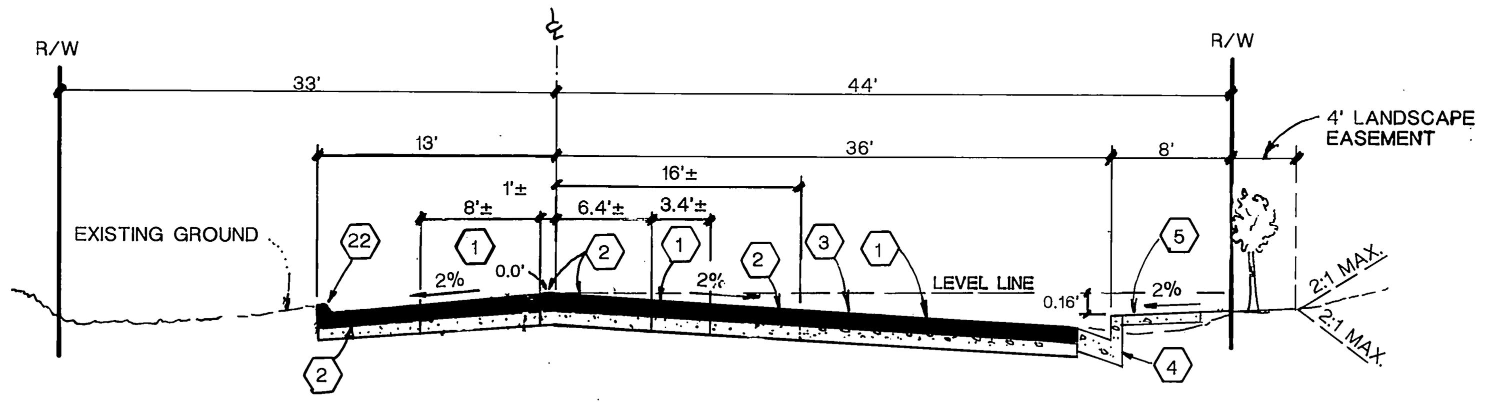

STA. 76+76.60 TO STA. 84+97.72

PALMYRITA AVENUE

TI = 8.0

MP–002–978

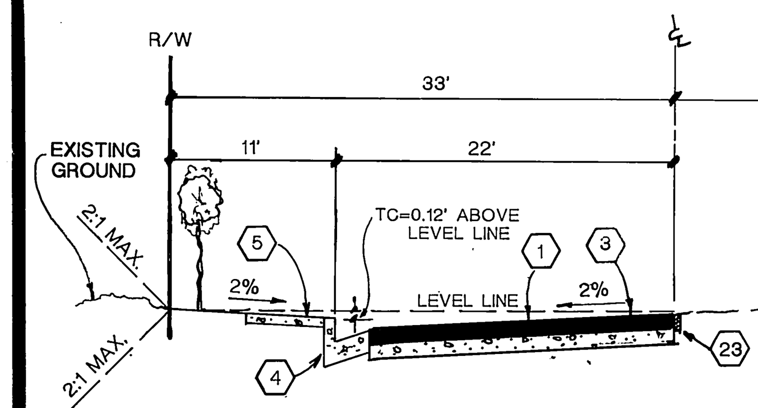

STA. 15+30.97 TO 22+54.92

MICHIGAN AVENUE

TI = 8.0

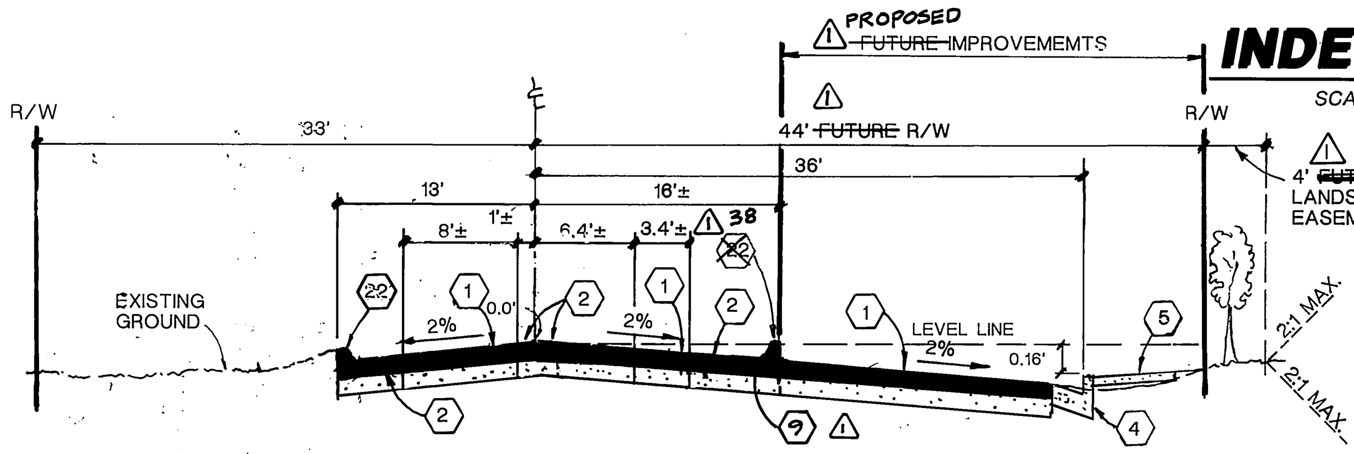

STA. 73+77.97 TO STA, 76+76.60

PALMYRITA AVENUE

TI = 8.0

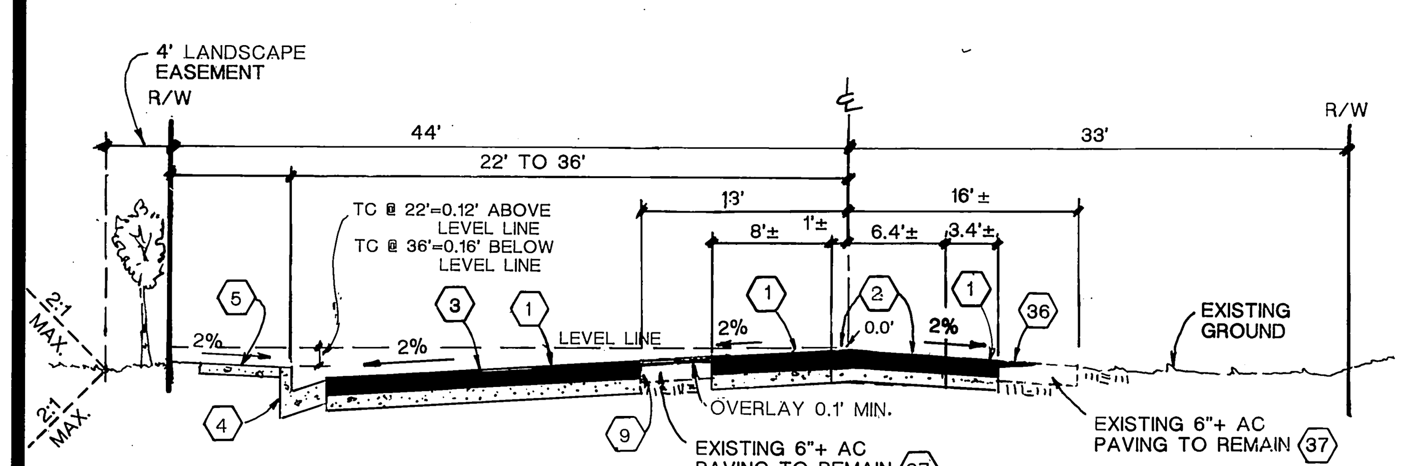

STA. 67+89.11 TO STA. 73+24.33 (NORTH SIDE)
STA. 67+89.11 TO STA. 73+77.97 (SOUTH SIDE)

PALMYRITA AVENUE

TI = 8.0

MP–002–989

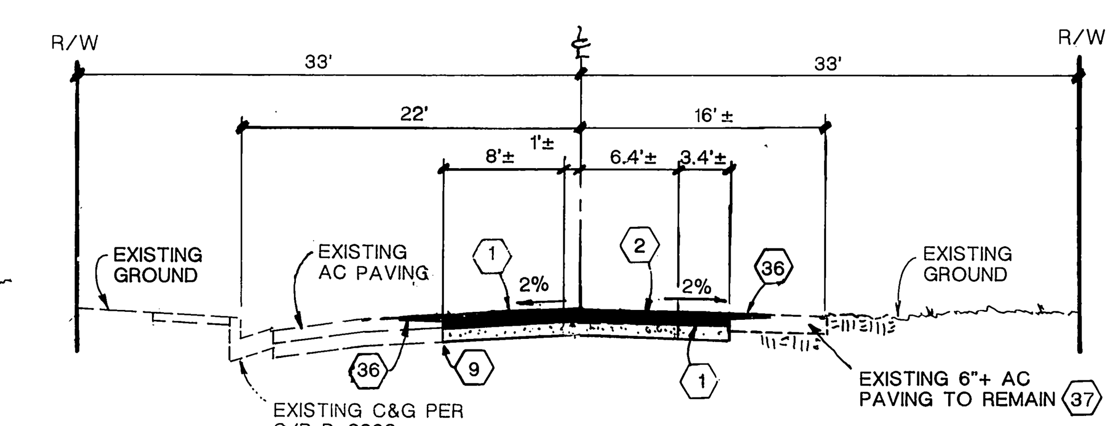

STA. 62+86.96 TO STA. 67+89.11

PALMYRITA AVENUE

TI = 8.0

TYPICAL SECTIONS

NOT TO SCALE

LEGEND

TOP OF CURB	TC
FLOWLINE	FL
FINISHED SURFACE	FS
GRADE BREAK	GB
RIGHT-OF-WAY	R/W
CENTERLINE	CL
HYDRAULIC GRADE LINE	HGL
REINFORCED CONCRETE PIPE	RCP
LINEAR FOOT	LF
POWER/TELEPHONE POLE	
FIRE HYDRANT	
EDGE OF EXISTING PAVEMENT	
EXISTING AC PAVING	
REMOVE AND REPLACE EX. AC PAVING	
PROPOSED AC PAVING	
EXISTING WATER LINE	— W —
EXISTING SANITARY SEWER	— SS —

CONSTRUCTION NOTES:

- (1) CONSTRUCT 3 ½ " A.C. OVER 5" AGGREGATE BASE CLASS 2, PER S.R.- 1525, R=60
- (2) REMOVE AND REPLACE EXISTING AC PAVING WITH 3 ½ AC OVER 5" AGGREGATE BASE CLASS 2, PER SR- 1525, R=60
- (3) PLACE FOG SEAL PER GENERAL NOTE # 9
- (4) CONSTRUCT 8" CURB & GUTTER PER CITY OF RIVERSIDE STD DWG NO. 200, TYPE 1
- (5) CONSTRUCT SIDEWALK PER CITY OF RIVERSIDE STD DWG NO. 325
- (6) CONSTRUCT WHEELCHAIR RAMP PER CITY OF RIVERSIDE STD DWG NO. 304, TYPE I
- (6a) CONSTRUCT WHEELCHAIR RAMP PER CITY OF RIVERSIDE STD DWG NO. 304,TYPE III
- (7) CONSTRUCT CROSS GUTTER AND SPANDREL PER CITY OF RIVERSIDE STD DWG NO. 220
- (8) PLANT STREET TREES TO THE SPECIFICATIONS OF THE PARK AND RECREATIONS DEPARTMENT
- (9) SAW CUT EXISTING AC PAVING
- (10) CONSTRUCT DRIVEWAY APPROACH PER DETAIL ON SHEET 5
- (11) REMOVE EXISTING TELEPHONE POLES (BY PACIFIC BELL)
- (12) INSTALL TYPE F-1 DELINEATORS 20' CENTERS
- (13) REMOVE EXISTING GRAVITY IRRIGATION SYSTEM
- (15) REMOVE EXISTING IRRIGATION SYSTEM GATE VALVES
- (16) REMOVE EXISTING PIPE GATE
- (17) REMOVE EXISTING RETAINING WALL
- (18) REMOVE EXISTING 18" DIA CMP DRAIN PIPE
- (19) INSTALL STREET NAME SIGN PER CITY OF RIVERSIDE STD DWG NO.662
- (21) ADJUST TO GRADE BY CONTRACTOR
- (22) CONSTRUCT TYPE I - 8" AC BERM PER STD DWG 250
- (23) INSTALL REDWOOD HEADER
- (24) INSTALL W-19 "END OF PAVEMENT" SIGN PER CITY OF RIVERSIDE STD DWG NO.666
- △2 (41) INSTALL ¼ TON GROUTED RIP-RAP
- △2 (40) CONSTRUCT 12' DRIVEWAY PER CITY OF RIV. STD.DWG. NO. 302 (A=12', B=24') TYPE CURB I.
- (25) INSTALL R-1 STOP SIGN PER CITY OF RIVERSIDE STD DWG NO. 666
- (26) INSTALL ONE SECTION "K" RAIL AND TYPE "N" MARKER WITH ROAD CLOSED PER CITY OF RIVERSIDE STD. DWG. NO. 665.
- (27) CONSTRUCT CURB OUTLET MODIFIED TO MATCH EXISTING ON-SITE CONCRETE FLUME W=4' PER CITY OF RIVERSIDE STD. DWG. NO. 410. (PER DETAIL "2"), SHEET 3
- (28) CONSTRUCT CURB OUTLET MODIFIED TO MATCH EXISTING ON-SITE CONCRETE FLUME W=6' PER CITY OF RIVERSIDE STD. DWG. NO. 410. (PER DETAIL "1"), SHEET 3
- (34) REMOVE EXISTING CURB AND GUTTER
- (35) REMOVE EXISTING POWER POLE (BY CITY FORCES)
- (36) FEATHER AC PAVING TO MATCH EXISTING (4' MIN)
- (37) IF AC THICKNESS IS LESS THAN 6" REMOVE AND REPLACE WITH 3 ½ " AC OVER 5" AGGREGATE BASE CLASS 2.
- △1 (38) REMOVE EXIST. BERM
- △1 (39) CONSTRUCT 5' WIDE PARKWAY DRAIN TYPE 2 PER STD. PLAN NO. 151-0.

CITY TAX CERTIFICATE NO. 027049, EXP. 1–25–99

500 PALMYRITA AVE. - COBB

QUANTITIES MP–002–978

NO.	ESTIMATED	UNIT	ITEM
1	55,560	SF	CONSTRUCT 3 ½ " A.C. OVER 5" AGGREGATE BASE CLASS 2, PER S.R.- 1525 R = 60
2	29,006	SF	REMOVE AND REPLACE EXISTING AC PAVING WITH 3 ½ AC OVER 5" AGGREGATE BASE CLASS 2 PER S.R.- 1525
3	11,876	SY	FOG SEAL PER GENERAL NOTE # 9
4	1,200	LF	8" CURB & GUTTER PER CITY OF RIVERSIDE STD DWG NO. 200 (TYPE 1)
5	7,143	SF	SIDEWALK PER CITY OF RIVERSIDE STD DWG NO. 325
6	1	EA	CONSTRUCT WHEELCHAIR RAMP PER CITY OF RIVERSIDE STD DWG NO. 304, TYPE I
6a	4	EA	CONSTRUCT WHEELCHAIR RAMP PER CITY OF RIVERSIDE STD DWG NO. 304,TYPE III
7	1,260	SF	CROSS GUTTER AND SPANREL PER CITY OF RIVERSIDE STD DWG NO. 220
8	25	EA	STREET TREES
9	270	LF	SAW CUT EXISTING A.C. PAVING
10	1,072	SF	CONSTRUCT DRIVEWAY APPROACH PER DETAIL ON SHEET 5
11	5	EA	REMOVE EXISTING TELEPHONE POLES (BY PACIFIC BELL)
12	6	EA	TYPE F-1 DELINEATIONS 20' CENTERS
13	1	LS	REMOVE EXISTING GRAVITY IRRIGATION SYSTEM
15	2	EA	REMOVE EXISTING IRRIGATION SYSTEM GATE VALVES
16	1	EA	REMOVE EXISTING PIPE GATE
19	1	EA	STREET NAME SIGNS PER CITY OF RIVERSIDE STD DWG NO. 662
22	1,553	LF	8" AC BERM PER CITY OF RIVERSIDE STD DWG NO. 250
23	772	LF	REDWOOD HEADER
24	1	EA	INSTALL W-19 "END OF PAVEMENT" SIGN PER CITY OF RIVERSIDE STD DWG NO.666
25	1	EA	INSTALL R-1 STOP SIGN PER CITY OF RIVERSIDE STD DWG NO. 666
26	20	LF	INSTALL ONE SECTION "K" RAIL AND TYPE "N" MARKER WITH ROAD CLOSED PER CITY OF RIVERSIDE STD. DWG. NO. 665.
27	1	EA	CONSTRUCT CURB OUTLET MODIFIED TO MATCH EXISTING ON-SITE CONCRETE FLUME W=4' PER CITY OF RIVERSIDE STD. DWG. NO. 410. (PER DETAIL "2"), SHEET 3
28	1	EA	CONSTRUCT CURB OUTLET MODIFIED TO MATCH EXISTING ON-SITE CONCRETE FLUME W=6' PER CITY OF RIVERSIDE STD. DWG. NO. 410. (PER DETAIL "1"), SHEET 3
36	6,292	SF	FEATHER AC PAVING TO MATCH EXISTING (4' MIN)

NOTE TO CONTRACTOR:

1. THE ESTIMATED QUANTITIES HEREON ARE ONLY FOR THE PURPOSE OF OBTAINING THE NECESSARY PERMITS. THE CONTRACTOR SHALL PERFORM HIS OWN QUANTITY TAKEOFF BEFORE SUBMITTING A BID FOR ANY PORTION OF THE IMPROVEMENTS COVERED BY THESE PLANS.

APN-255-120-005 & 024

QUANTITIES MP–002–989

NO.	ESTIMATED	UNIT	ITEM
1	8,059	SF	CONSTRUCT 3½" A.C. OVER 5" AGGREGATE BASE CLASS 2, PER S.R.- 1525 R = 60
3	934	SY	FOG SEAL PER GENERAL NOTE # 9
4	286	LF	8" CURB & GUTTER PER CITY OF RIVERSIDE STD DWG NO. 200 (TYPE I)
5	1,611	SF	SIDEWALK PER CITY OF RIVERSIDE STD DWG NO. 325
6a	6	EA	CONSTRUCT WHEELCHAIR RAMP PER CITY OF RIVERSIDE STD DWG NO. 304,TYPE III
8	6	EA	STREET TREES
9	590	LF	SAW CUT EXISTING A.C. PAVING
10	2,405	SF	CONSTRUCT DRIVEWAY APPROACH PER DETAIL ON SHEET 5
22	95	LF	8" AC BERM PER CITY OF RIVERSIDE STD DWG 250
26	220	SF	SAW CUT EXISTING PAVING
34	15	LF	REMOVE EXISTING CURB AND GUTTER
35	4	EA	REMOVE EXISTING POWER POLE (BY CITY FORCES)

APN-257-020-006 & 007

△1 MP-006-989 QUANTITIES

NO	ESTIMATE	UNIT	ITEM
1	5,870	SF	CONSTRUCT 3½" A.C. OVER 5" AGGREGATE BASE CLASS 2, PER S.R.- 1525 R = 60
3	639	SY	FOG SEAL PER GENERAL NOTE # 9
△2 4	285 ~~234~~	LF	8" CURB & GUTTER PER CITY OF RIVERSIDE STD DWG NO. 200, TYPE 1
5	1,079	SF	SIDEWALK PER CITY OF RIVERSIDE STD DWG NO. 325
6a	2	EA	CONSTRUCT WHEELCHAIR RAMP PER CITY OF RIVERSIDE STD DWG NO. 304,TYPE III
8	5	EA	STREET TREES
9	316	LF	SAW CUT EXISTING A.C. PAVING
10	520	SF	CONSTRUCT DRIVEWAY APPROACH PER DETAIL ON SHEET 5
11	1	EA	REMOVE EXISTING TELEPHONE POLE (BY PACIFIC BELL)
22	110	LF	8" AC BERM PER CITY OF RIVERSIDE STD DWG NO. 250
△1 38	96	LF	REMOVE EXIST. A.C. BERM
39	1	EA	5' WIDE PARKWAY DRAIN INLET TYPE 2 PER APWA STD. PLAN NO. 151-0. (SEE DETAIL "D", SHT. 2 & DETAIL "B" SHT. 5)
△2 40	1	EA	12' DRIVEWAY PER CITY OF RIV. STD. DWG No. 302, (A=12', B=24')
△2 41	50	SF	¼ TON GROUTED RIP-RAP

GENERAL NOTES:

1. NO PERSON SHALL PERFORM ANY CONSTRUCTION ACTIVITY OR INSTALL ANY OBJECTS WITHIN THE PUBLIC RIGHT-OF-WAY OR EASEMENTS OF THE CITY OF RIVERSIDE WITHOUT A VALID CONSTRUCTION PERMIT OR, A STREET OPENING PERMIT ISSUED BY THE CITY'S PUBLIC WORKS DEPARTMENT.
2. IT SHALL BE THE RESPONSIBILITY OF THE CONTRACTOR TO CLEAR THE RIGHT-OF-WAY IN ACCORDANCE WITH THE PROVISIONS OF LAW AS IT AFFECTS EACH UTILITY INCLUDING IRRIGATION LINES AND APPURTENANCES AND AT NO COST TO THE CITY.
3. CONSTRUCTION SHALL BE IN ACCORDANCE WITH THE CITY OF RIVERSIDE DEPARTMENT OF PUBLIC WORKS, STANDARD DRAWINGS, ITS SUPPLEMENTAL NOTES AND THE STANDARD SPECIFICATIONS FOR PUBLIC WORKS CONSTRUCTION, CURRENT EDITION.
4. TRIM EDGE OF EXISTING PAVEMENT WHERE NEW PAVEMENT JOINS TO A SMOOTH STRAIGHT LINE. CONSTRUCT MATCH-UP PAVING AS SHOWN ON PLAN AND OVERLAY PAVING AS DIRECTED IN THE FIELD TO PRODUCE A SMOOTH SECTION.
5. CONSTRUCT DRIVEWAY APPROACHES PER MODIFIED STD DWG 302. EXACT SIZE AND LOCATION TO BE STAKED BY THE PRIVATE ENGINEER PRIOR TO CONSTRUCTION OF THE CURB AND GUTTER AND AS APPROVED BY THE TRAFFIC ENGINEER.
6. ALL FLAGGED ELEVATIONS SHALL BE STAKED IN THE FIELD BY THE PRIVATE ENGINEER.
7. THE PRIVATE ENGINEER SIGNING THESE PLANS IS RESPONSIBLE FOR ASSURING THE ACCURACY AND ACCEPTABILITY OF THE WORK HEREON. IN THE EVENT OF DISCREPANCIES ARISING DURING CONSTRUCTION, THE PRIVATE ENGINEER SIGNING THESE PLANS SHALL BE RESPONSIBLE FOR DETERMINING AN ACCEPTABLE SOLUTION AND REVISING THE PLANS FOR APPROVAL BY THE CITY.
8. THE DEVELOPER SHALL BE RESPONSIBLE FOR PRESERVING OR RE-ESTABLISHING AND REFERENCING SURVEY MONUMENTS DESTROYED, DISTURBED OR BURIED AS A RESULT OF CONSTRUCTION SHOWN HEREON.
9. ASPHALTIC EMULSION (FOG SEAL) SHALL BE APPLIED NOT LESS THAN 14 DAYS FOLLOWING PLACEMENT OF ASPHALT SURFACING AND SHALL BE APPLIED AT A RATE OF 0.05 GAL\ SQ. YD. AND SHALL CONFORM TO SECTIONS 37, 39, AND 94 OF STATE STANDARD SPECIFICATIONS.
10. ON ALL AREAS WITHIN PUBLIC RIGHT OF WAY WHERE THE FILL IS ONE (1) FOOT OR GREATER, A LETTER WILL BE REQUIRED FROM THE SOILS ENGINEER CERTIFYING THE COMPACTION OF THE FILL BELOW SUBGRADE, PRIOR TO ISSUANCE OF THE CONSTRUCTION PERMIT/CUT SHEETS.
11. ALL TRAFFIC SIGNS SHALL BE INSTALLED PRIOR TO OPENING THE STREETS TO THE PUBLIC.
12. SEE "STREET LIGHTING PLANS" FOR QUANTITY AND LOCATION OF REQUIRED STREET LIGHTS.
13. THE EXISTENCE AND LOCATION OF ANY UNDERGROUND UTILITY PIPES OR STRUCTURES SHOWN ON THESE PLANS WERE OBTAINED BY A SEARCH OF THE AVAILABLE RECORDS. TO THE BEST OF OUR KNOWLEDGE THERE ARE NO EXISTING UTILITIES EXCEPT AS SHOWN ON THESE PLANS. THE CONTRACTOR IS REQUIRED TO TAKE PRECAUTIONARY MEASURES TO PROTECT THE UTILITY LINES SHOWN AND ANY OTHER LINES NOT OF RECORD OR NOT SHOWN ON THESE PLANS.
14. ANY TRAFFIC CONTROL STRIPING OBLITERATED AND/OR BADLY WORN DURING CONSTRUCTION SHALL BE RESTORED BY THE CONTRACTOR WITHIN FIVE DAYS AFTER NOTIFICATION FROM THE CITY INSPECTOR.
15. THE CONTRACTOR SHALL CALL IN A LOCATION REQUEST TO UNDERGROUND SERVICE ALERT (USA) AT 800-227-2600, TWO WORKING DAYS BEFORE DIGGING. NO CONSTRUCTION PERMIT WILL BE ISSUED BY THE PUBLIC WORKS DEPARTMENT INVOLVING EXCAVATION FOR UNDERGROUND FACILITIES UNLESS THE APPLICANT HAS BEEN PROVIDED AN INQUIRY IDENTIFICATION NUMBER BY USA.
16. QUANTITIES SHOWN ARE FOR INFORMATION ONLY AND THE CITY OF RIVERSIDE IS NOT RESPONSIBLE FOR THEIR ACCURACY.
17. IN PAVEMENT OVERLAY AREAS, DISTRESSED EXISTING PAVEMENT SHALL BE REMOVED AND REPLACED AS DIRECTED BY THE INSPECTOR PRIOR TO OVERLAYING WITH NEW AC PAVING.
18. FINAL STRIPING FOR TRAFFIC CONTROL AND/OR PAVEMENT MARKING TO BE THE RESPONSIBILITY OF THE DEVELOPER.
19. ~~DEVELOPER TO GIVE CITY WATER DIVISION FIVE (5) WORKING DAYS WRITTEN NOTICE PRIOR TO START OF CONSTRUCTION AND TO ALLOW CITY TEN (10) DAYS FOR COMPLETEION OF WORK.~~

GENERAL NOTES STREET TREE PLANTING:

1. ALL RELATED WORK SHALL CONFORM TO THE CITY OF RIVERSIDE, PARK AND RECREATION DEPARTMENT STANDARDS AND CITY OF RIVERSIDE STREET TREE POLICIES.

- CONTACT THE PARK PROJECTS INSPECTOR A MINIMUM OF 48 HOURS IN ADVANCE AT 787-7223 TO SCHEDULE INSPECTIONS. INSPECTIONS SHALL BE REQUIRED: A)WHEN PLANT LOCATIONS HAVE BEEN SPOTTED IN THE FIELD PRIOR TO DIGGING PLANT PITS, B) WHILE DIGGING PLANT PITS AND PLANTING/RELOCATING TREES, C) AFTER PLANTING AND ALL OTHER INDICATED OR SPECIFIED WORK HAS BEEN COMPLETED FOR START OF MAINTENANCE, AND D) AT END OF MAINTENANCE\ FINAL ACCEPTANCE DEVELOPER WILL BE RELEASED FROM MAINTENANCE ONLY UPON RECEIPT OF WRITTEN NOTIFICATION FROM THE CITY THAT THE PARK AND RECREATION DEPARTMENT IS ASSUMING MAINTENANCE RESPONSIBILITIES.
- THE DEVELOPER SHALL MAINTAIN ALL PLANTINGS FOR A MINIMUM PERIOD OF ONE(1) YEAR.
- ALL STREET TREES ARE TO BE PLANTED PRIOR TO OCCUPANCY.
- STREET TREE PLANTING SHALL BE AS FOLLOWS:

STREET NAME	COMMON NAME	QUANTITY	MIN.SIZE
PALMYRITA AVE	4' BROWN TRUNK WASHINGTONIA ROBUSTA	11 EA	~~15 GAL~~. 4' B.T.
MICHIGAN	ARISTOCRAT PEAR	16 EA	15 GAL

NOTICE TO CONTRACTOR:

1. THE EXISTENCE AND LOCATION OF ANY UNDERGROUND UTILITY PIPES OR STRUCTURES SHOWN ON THIS PLAN ARE OBTAINED BY SEARCH OF AVAILABLE RECORDS, TO THE BEST OF OUR KNOWLEDGE, THERE ARE NO EXISTING UTILITIES EXCEPT AS SHOWN ON THESE PLANS. THE CONTRACTOR IS REQUIRED TO TAKE DUE PRECAUTIONARY MEASURES TO PROTECT THE UTILITIES SHOWN AND ANY OTHER LINES OR STRUCTURES NOT SHOWN ON THESE PLANS.
2. ALL CONTRACTORS AND SUBCONTRACTORS PERFORMING WORK SHOWN ON OR RELATED TO THESE PLANS SHALL CONDUCT THEIR OPERATIONS SO THAT ALL EMPLOYEES ARE PROVIDED A SAFE PLACE TO WORK AND THE PUBLIC IS PROTECTED. ALL CONTRACTORS AND SUBCONTRACTORS SHALL COMPLY WITH THE "OCCUPATIONAL SAFETY AND HEALTH REGULATIONS" OF THE U.S. DEPARTMENT OF LABOR, AND THE STATE OF CALIFORNIA DEPARTMENT OF INDUSTRIAL RELATIONS "CONSTRUCTION SAFETY ORDERS".
3. THE CIVIL ENGINEER SHALL NOT BE RESPONSIBLE IN ANY WAY FOR THE CONTRACTORS AND SUBCONTRACTORS' COMPLIANCE WITH THE "OCCUPATIONAL SAFETY AND HEALTH REGULATIONS" OF THE U.S. DEPARTMENT OF LABOR OR WITH THE STATE OF CALIFORNIA DEPARTMENT OF INDUSTRIAL RELATIONS, "CONSTRUCTION SAFETY ORDERS".
4. CONTRACTOR FURTHER AGREES THAT HE SHALL ASSUME SOLE AND COMPLETE RESPONSIBILITY FOR JOB SITE CONDITIONS DURING THE COURSE OF CONSTRUCTION OF THIS PROJECT. INCLUDING SAFETY OF ALL PERSONS AND PROPERTY; THAT THIS REQUIREMENT SHALL APPLY CONTINUOUSLY AND NOT BE LIMITED TO NORMAL WORKING HOURS; AND THAT THE CONTRACTOR SHALL DEFEND, INDEMNIFY AND HOLD THE OWNER AND THE ENGINEER HARMLESS FROM ANY AND ALL LIABILITY, REAL OR ALLEGED, IN CONNECTION WITH THE PERFORMANCE OF WORK ON THIS PROJECT, EXCEPTING FOR LIABILITY ARISING FROM THE SOLE NEGLIGENCE OF THE OWNER OR THE ENGINEER.

UNAUTHORIZED CHANGES AND USES:

THE ENGINEER PREPARING THESE PLANS WILL NOT BE RESPONSIBLE FOR, OR LIABLE FOR, UNAUTHORIZED CHANGES TO OR USES OF THESE PLANS. ALL CHANGES TO THE PLANS MUST BE IN WRITING AND MUST BE APPROVED BY THE PREPARER OF THESE PLANS.

OWNER/DEVELOPER:

RAYMOND S. COBB
TRUSTEE OF THE HEATHER COBB HARTSOCK TRUST
2100 EAST FOURTH ST
SANTA ANA, CA 92705

ASSESSORS PARCEL NO:

257-020-008 AND 257-020-009

*AS-BUILT PER PLANS 5-16-03 GH

USA

1-800-227-2600

PACIFIC BELL TELEPHONE
APPROVED [signature] DATE 4/28/98

APPROVED BY: [signature] 11/26/98
~~CHIEF~~ UTILITIES ENGINEER-ELECTRIC DATE

BENCHMARK: J8-H3 ELEVATION: 981.648
LEAD & TACK IN TOP OF CONCRETE OF CATCH BASIN. LOCATED IN THE NORTHWEST CORNER OF CATCH BASIN IN THE SOUTHWEST CORNER OF PALMYRITA AVENUE AND NORTHGATE SOUTHERLY.

CITY OF RIVERSIDE WATER SYSTEM
[signature] 1/15/99
APPROVED DATE

REGISTERED PROFESSIONAL ENGINEER ALLEN W. MARTIN No. C 38463 EXP. 3-31-01 CIVIL STATE OF CALIFORNIA

Southland Engineering
2200 BUSINESS WAY, STE. 100
RIVERSIDE, CA. 92501
(909) 788–8488

PREPARED UNDER THE SUPERVISION OF
[signature] 1-15-99
ALLEN W. MARTIN DATE
R.C.E. 38463 EXP. 3–31–01

MARK	REVISIONS	APPR.	DATE
△2	ADD CONSTRUCT NOTE 40 & REVISE QUANTITIES	[initials]	5/30/01
△1	MP-006-989		
	WIDENED PALMYRITA, S. SIDE [initials] 8/14/00		5/30/01

DESIGNED BY EJ DRAWN BY AR CHECKED BY AWM

CITY OF RIVERSIDE
PUBLIC WORKS DEPARTMENT

APPROVED BY	DATE	BY
PRINCIPAL ENGINEER	2/11/99	
PARK DEPARTMENT	2/04/99	
TRAFFIC DIVISION	2/1/99	
P.W. ENGINEER MANAGER	2/16/99	
STREET SERVICES	2/11/99	

APPROVED BY R. McBride
PUBLIC WORKS DIRECTOR
DATE 2-16-99

STREET PLAN AND PROFILE

TITLE SHEET
MP-002-978

ACCOUNT NO.

R–3521

SHEET 1 OF 6

HORIZ. SCALE: 1" = 40' VERT. SCALE: 1" = 4'

98105

INDEXED 3-2-99 GH

PC–4067–S

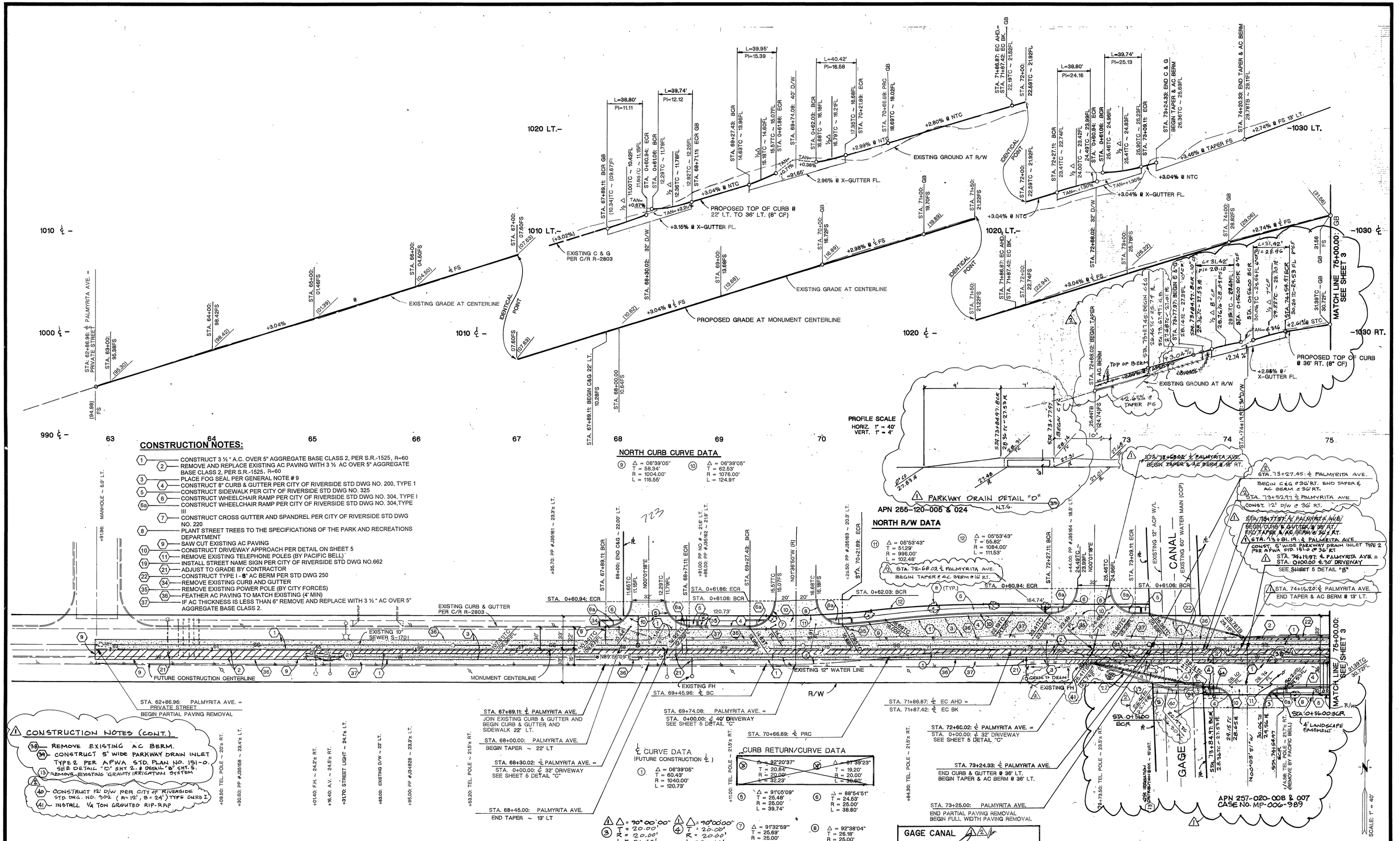

CONSTRUCTION NOTES:

1. CONSTRUCT 3 ½ " A.C. OVER 5" AGGREGATE BASE CLASS 2, PER S.R.-1525, R=60
2. REMOVE AND REPLACE EXISTING AC PAVING WITH 3 ½ AC OVER 5" AGGREGATE BASE CLASS 2, PER S.R.-1525, R=60
3. PLACE FOG SEAL PER GENERAL NOTE # 9
4. CONSTRUCT 8" CURB & GUTTER PER CITY OF RIVERSIDE STD DWG NO. 200, TYPE 1
5. CONSTRUCT SIDEWALK PER CITY OF RIVERSIDE STD DWG NO. 325
6. CONSTRUCT WHEELCHAIR RAMP PER CITY OF RIVERSIDE STD DWG NO. 304, TYPE I
6a. CONSTRUCT WHEELCHAIR RAMP PER CITY OF RIVERSIDE STD DWG NO. 304,TYPE III
7. CONSTRUCT CROSS GUTTER AND SPANDREL PER CITY OF RIVERSIDE STD DWG NO. 220
8. PLANT STREET TREES TO THE SPECIFICATIONS OF THE PARK AND RECREATIONS DEPARTMENT
9. SAW CUT EXISTING AC PAVING
10. CONSTRUCT DRIVEWAY APPROACH PER DETAIL ON SHEET 5
11. REMOVE EXISTING TELEPHONE POLES (BY PACIFIC BELL)
19. INSTALL STREET NAME SIGN PER CITY OF RIVERSIDE STD DWG NO.662
21. ADJUST TO GRADE BY CONTRACTOR
22. CONSTRUCT TYPE I - 8" AC BERM PER STD DWG 250
34. REMOVE EXISTING CURB AND GUTTER
35. REMOVE EXISTING POWER POLE (BY CITY FORCES)
36. FEATHER AC PAVING TO MATCH EXISTING (4" MIN)
37. IF AC THICKNESS IS LESS THAN 6" REMOVE AND REPLACE WITH 3 ½ " AC OVER 5" AGGREGATE BASE CLASS 2.

CONSTRUCTION NOTES (CONT.)

38. REMOVE EXISTING AC BERM.
39. CONSTRUCT 5' WIDE PARKWAY DRAIN INLET TYPE 2 PER APWA STD. PLAN NO. 151-0. SEE DETAIL "D" SHT 2. & DETAIL "B" SHT. 5.
13. REMOVE EXISTING GRAVITY IRRIGATION SYSTEM
40. CONSTRUCT 12' D/W PER CITY OF RIVERSIDE STD. DWG. NO. 302 (R= 12', B= 24') TYPE CURB I
41. INSTALL 1/4 TON GROUTED RIP-RAP

STA. 62+86.96: PALMYRITA AVE. = PRIVATE STREET
BEGIN PARTIAL PAVING REMOVAL

STA. 67+89.11: ℄ PALMYRITA AVE.
JOIN EXISTING CURB & GUTTER AND BEGIN CURB & GUTTER AND SIDEWALK 22' LT.

STA. 68+00.00: PALMYRITA AVE.
BEGIN TAPER ~ 22' LT

STA. 68+30.02: ℄ PALMYRITA AVE. =
STA. 0+00.00: ℄ 32' DRIVEWAY
SEE SHEET 5 DETAIL "C"

STA. 68+45.00: PALMYRITA AVE.
END TAPER ~ 13' LT

STA. 69+74.08: PALMYRITA AVE. =
STA. 0+00.00: ℄ 40' DRIVEWAY
SEE SHEET 5 DETAIL "C"

STA. 70+66.69: ℄ PRC

STA. 71+86.87: ℄ EC AHD =
STA. 71+87.42: ℄ EC BK

STA. 72+66.02: ℄ PALMYRITA AVE. =
STA. 0+00.00: ℄ 32' DRIVEWAY
SEE SHEET 5 DETAIL "C"

STA. 73+24.33: ℄ PALMYRITA AVE.
END CURB & GUTTER @ 36' LT.
BEGIN TAPER & AC BERM @ 36' LT.

STA. 73+25.00: PALMYRITA AVE.
END PARTIAL PAVING REMOVAL
BEGIN FULL WIDTH PAVING REMOVAL

STA. 73+77.97: ℄ PALMYRITA AVE.
BEGIN CURB & GUTTER @ 36' RT.
END TAPER & AC BERM @ 36' RT.

STA. 73+81.19: ℄ PALMYRITA AVE.
CONST. 5' WIDE PARKWAY DRAIN INLET TYPE 2 PER APWA STD. 151-0 @ 36' RT

STA. 74+19.97: ℄ PALMYRITA AVE. =
STA. 0+00.00 ℄ 30' DRIVEWAY
SEE SHEET 5 DETAIL "B"

STA. 74+15.20: ℄ PALMYRITA AVE.
END TAPER & AC BERM @ 13' LT.

STA. 73+27.45: ℄ PALMYRITA AVE.
BEGIN C&G @ 36' RT. END TAPER & AC BERM @ 36' RT.

STA. 73+52.97: ℄ PALMYRITA AVE
CONST. 12' D/W @ 36' RT.

NORTH CURB CURVE DATA

(9) Δ = 06°39'05" T = 58.34' R = 1004.00' L = 116.55'

(10) Δ = 06°39'05" T = 62.53' R = 1076.00' L = 124.91'

NORTH R/W DATA

(11) Δ = 05°53'43" T = 51.29' R = 996.00' L = 102.48'

(12) Δ = 05°53'43" T = 55.82' R = 1084.00' L = 111.53'

CURB RETURN/CURVE DATA

(X) Δ = 92°20'37" T = 20.84' R = 20.00' L = 32.23'

(X) Δ = 87°39'23" T = 19.20' R = 20.00' L = 30.60'

(5) Δ = 91°05'09" T = 25.48' R = 25.00' L = 39.74'

(6) Δ = 88°54'51" T = 24.63' R = 25.00' L = 38.80'

(3) Δ = 90°00'00" T = 20.00' R = 20.00' L = 31.42'

(4) Δ = 90°00'00" T = 20.00' R = 20.00' L = 31.42'

(7) Δ = 91°32'59" T = 25.69' R = 25.00' L = 39.95'

(8) Δ = 92°38'04" T = 26.18' R = 25.00' L = 40.42'

℄ CURVE DATA (FUTURE CONSTRUCTION ℄)

(1) Δ = 06°39'05" T = 60.43' R = 1040.00' L = 120.73'

USA
1-800-227-2600

PACIFIC BELL TELEPHONE
APPROVED 11/25/98 DATE

APPROVED BY
CHIEF UTILITIES ENGINEER-ELECTRIC 11/26/98 DATE

BENCHMARK: J8-H3 ELEVATION: 981.648
LEAD & TACK IN TOP OF CONCRETE OF CATCH BASIN. LOCATED IN THE NORTHWEST CORNER OF CATCH BASIN IN THE SOUTHWEST CORNER OF PALMYRITA AVENUE AND NORTHGATE SOUTHERLY.

CITY OF RIVERSIDE WATER SYSTEM
APPROVED 1/15/99 DATE

REGISTERED PROFESSIONAL ENGINEER — ALLEN W. MARTIN — No. 38463 — CIVIL — STATE OF CALIFORNIA

Southland Engineering
2200 BUSINESS WAY, Ste. 100
RIVERSIDE, CA. 92501
(909) 788-8488

PREPARED UNDER THE SUPERVISION OF
ALLEN W. MARTIN 1-15-99
R.C.E. 38463 EXP. 3-31-01 DATE

MARK	REVISIONS	APPR.	DATE
	ADD RIP-RAP		
2	EXTEND C&G, SIDEWALK TO STA. 73+24.33		5/30/01
	FROM STA. 73+77.97, ADD D/W, CONST. NOTE 40		5/30/01
1	MP-006-989		5/30/01
	WIDENED PALMYRITA S. SIDE		
	STA. 72+68 TO STA. 74+77.97		

DESIGNED BY MS DRAWN BY AR CHECKED BY AWM

CITY OF RIVERSIDE
PUBLIC WORKS DEPARTMENT

APPROVED BY	DATE	BY
PRINCIPAL ENGINEER	2/1/99	
PARK DEPARTMENT	01/29/99	
TRAFFIC DIVISION	2/1/99	
P.W. ENGINEER MANAGER	1/16/99	
STREET SERVICES	2/11/99	

APPROVED BY R. McDuffie
PUBLIC WORKS DIRECTOR
DATE 2-16-99

STREET PLAN AND PROFILE

PALMYRITA AVENUE
MP-002-978
FROM STA. 62+86.96 TO STA. 75+.00.00

HORIZ. SCALE: 1" = 40' VERT. SCALE: 1" = 4'

ACCOUNT NO. R-3521

SHEET 2 OF 6

98105

*AS-BUILT PER PLANS 5-16-03 GH

INDEXED 3-2-99 GH

PC-4067-S

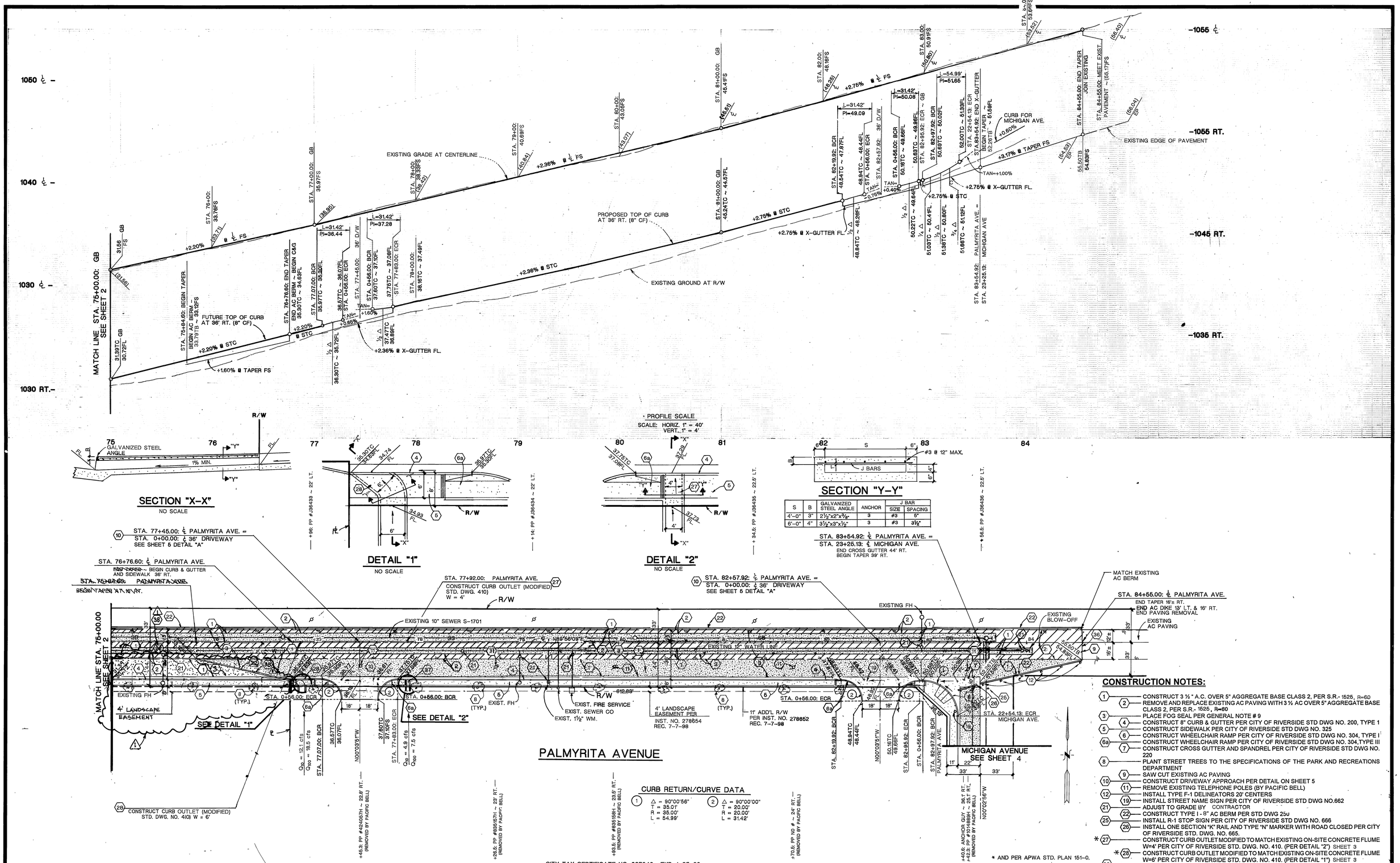

CONSTRUCTION NOTES:

1. CONSTRUCT 3 ½ " A.C. OVER 5" AGGREGATE BASE CLASS 2, PER S.R.- 1525, R=60
2. REMOVE AND REPLACE EXISTING AC PAVING WITH 3 ½ AC OVER 5" AGGREGATE BASE CLASS 2, PER S.R.- 1525, R=60
3. PLACE FOG SEAL PER GENERAL NOTE # 9
4. CONSTRUCT 8" CURB & GUTTER PER CITY OF RIVERSIDE STD DWG NO. 200, TYPE 1
5. CONSTRUCT SIDEWALK PER CITY OF RIVERSIDE STD DWG NO. 325
6. CONSTRUCT WHEELCHAIR RAMP PER CITY OF RIVERSIDE STD DWG NO. 304, TYPE I
6a. CONSTRUCT WHEELCHAIR RAMP PER CITY OF RIVERSIDE STD DWG NO. 304, TYPE III
7. CONSTRUCT CROSS GUTTER AND SPANDREL PER CITY OF RIVERSIDE STD DWG NO. 220
8. PLANT STREET TREES TO THE SPECIFICATIONS OF THE PARK AND RECREATIONS DEPARTMENT
9. SAW CUT EXISTING AC PAVING
10. CONSTRUCT DRIVEWAY APPROACH PER DETAIL ON SHEET 5
11. REMOVE EXISTING TELEPHONE POLES (BY PACIFIC BELL)
12. INSTALL TYPE F-1 DELINEATORS 20' CENTERS
19. INSTALL STREET NAME SIGN PER CITY OF RIVERSIDE STD DWG NO.662
21. ADJUST TO GRADE BY CONTRACTOR
22. CONSTRUCT TYPE I - 8" AC BERM PER STD DWG 25u
25. INSTALL R-1 STOP SIGN PER CITY OF RIVERSIDE STD DWG NO. 666
26. INSTALL ONE SECTION "K" RAIL AND TYPE "N" MARKER WITH ROAD CLOSED PER CITY OF RIVERSIDE STD. DWG. NO. 665.
*27. CONSTRUCT CURB OUTLET MODIFIED TO MATCH EXISTING ON-SITE CONCRETE FLUME W=4' PER CITY OF RIVERSIDE STD. DWG. NO. 410. (PER DETAIL "2") SHEET 3
*28. CONSTRUCT CURB OUTLET MODIFIED TO MATCH EXISTING ON-SITE CONCRETE FLUME W=6' PER CITY OF RIVERSIDE STD. DWG. NO. 410. (PER DETAIL "1") SHEET 3
36. FEATHER AC PAVING TO MATCH EXISTING (4" MIN.)

* AND PER APWA STD. PLAN 151-0.

CITY TAX CERTIFICATE NO. 027049, EXP. 1-25-99

USA
1-800-227-2600

PACIFIC BELL TELEPHONE
APPROVED 11/25/98 DATE

APPROVED BY: 11/26/98
CHIEF UTILITIES ENGINEER - ELECTRIC DATE

BENCHMARK: J8-H3 ELEVATION: 981.648
LEAD & TACK IN TOP OF CONCRETE OF CATCH BASIN, LOCATED IN THE NORTHWEST CORNER OF CATCH BASIN IN THE SOUTHWEST CORNER OF PALMYRITA AVENUE AND NORTHGATE SOUTHERLY.

CITY OF RIVERSIDE WATER SYSTEM
APPROVED 1/15/99 DATE

REGISTERED PROFESSIONAL ENGINEER ALLEN W. MARTIN No. C 35463 EXP. 3-31-01 CIVIL STATE OF CALIFORNIA

Southland Engineering
2200 BUSINESS WAY, STE. 100
RIVERSIDE, CA. 92501
(909) 788-8488

PREPARED UNDER THE SUPERVISION OF
ALLEN W. MARTIN 1-15-99
R.C.E. 38463 EXP. 3-31-01 DATE

MARK	REVISIONS	APPR.	DATE
1	MP-006-989 WIDENED PALMYRITA, S. SIDE STA. 72+68 TO STA. 74+77 ±		5/20/01

DESIGNED BY EJ DRAWN BY AR CHECKED BY AWM

CITY OF RIVERSIDE
PUBLIC WORKS DEPARTMENT

APPROVED BY	DATE	BY
PRINCIPAL ENGINEER	2/11/99	
PARK DEPARTMENT	2/10/99	
TRAFFIC DIVISION	2/11/99	
P.W. ENGINEER MANAGER	2/11/99	
STREET SERVICES	2/11/99	

APPROVED BY R. Mc Grath
PUBLIC WORKS DIRECTOR
DATE 2-16-99

STREET PLAN AND PROFILE

PALMYRITA AVENUE
MP-002-978
FROM STA. 75+00.00 TO 84+55.00
*AS-BUILT PER PLANS 5-16-03 GH

ACCOUNT NO. R-3521
SHEET 3 OF 6
98105

HORIZ. SCALE: 1" = 40' VERT. SCALE: 1" = 4'

INDEXED 3-2-99 PC-4067-S

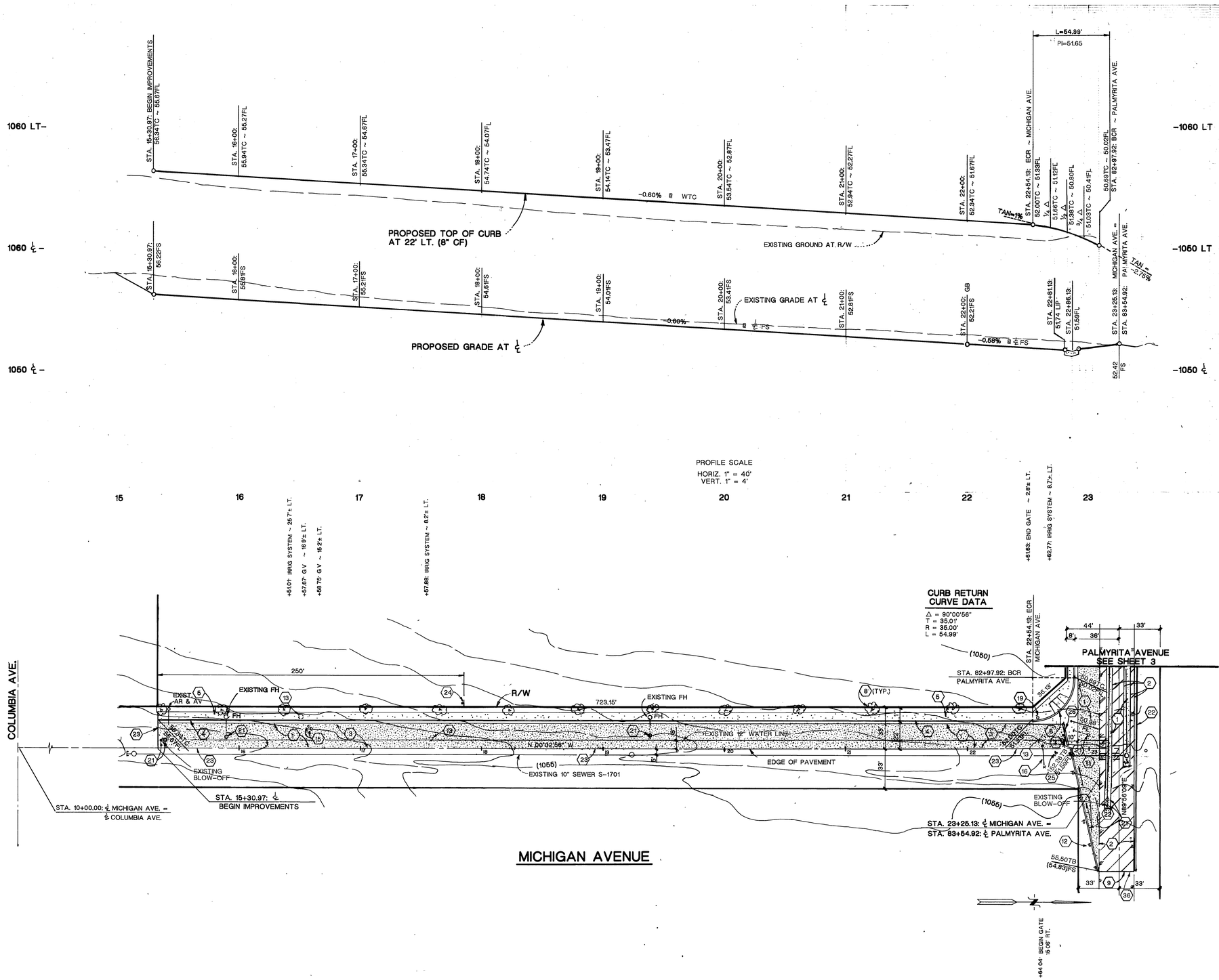

PROFILE SCALE
HORIZ. 1" = 40'
VERT. 1" = 4'

MICHIGAN AVENUE

CONSTRUCTION NOTES:

1. CONSTRUCT 3½" A.C. OVER 5" AGGREGATE BASE CLASS 2, PER S.R.- 1525, R=60
2. REMOVE & REPLACE EXISTING AC PAVING W/3½" OVER 5" AGGR. BASE CLASS 2, PER SR-1525, R=60
3. PLACE FOG SEAL PER GENERAL NOTE # 9
4. CONSTRUCT 8" CURB & GUTTER PER CITY OF RIVERSIDE STD DWG NO. 200, TYPE 1
5. CONSTRUCT SIDEWALK PER CITY OF RIVERSIDE STD DWG NO. 325
6. CONSTRUCT WHEELCHAIR RAMP PER CITY OF RIVERSIDE STD DWG NO. 304, TYPE 1
7. CONSTRUCT CROSS GUTTER PER CITY OF RIVERSIDE STD DWG NO. 220
8. PLANT STREET TREES TO THE SPECIFICATIONS OF THE PARK AND RECREATIONS DEPARTMENT
9. SAW CUT EXISTING AC PAVING
11. REMOVE EXISTING TELEPHONE POLES (BY PACIFIC BELL)
12. INSTALL TYPE F-1 DELINEATORS 20' CENTERS
13. REMOVE EXISTING GRAVITY IRRIGATION SYSTEM
15. REMOVE EXISTING IRRIGATION SYSTEM GATE VALVES
16. REMOVE EXISTING PIPE GATE
19. INSTALL STREET NAME SIGN PER CITY OF RIVERSIDE STD DWG NO.662
22. CONSTRUCT TYPE I -8" AC BERM PER STD DWG 250
23. INSTALL REDWOOD HEADER
24. INSTALL W-19 "END OF PAVEMENT" SIGN PER CITY OF RIVERSIDE STD DWG NO.666
25. INSTALL R-1 STOP SIGN PER CITY OF RIVERSIDE STD DWG NO. 662
26. INSTALL ONE SECTION "K" RAIL AND TYPE "N" MARKER WITH ROAD CLOSED PER CITY OF RIVERSIDE STD. DWG. NO. 665
21. ADJUST TO GRADE BY CONTRACTOR
36. FEATHER AC PAVING TO MATCH EXISTING (4" MIN.)

CITY TAX CERTIFICATE NO. 027049, EXP. 1-25-99

* AS-BUILT PER PLANS 5-16-03 GH

USA
1-800-227-2600

PACIFIC BELL TELEPHONE
APPROVED 11/25/98 DATE
APPROVED BY: CHIEF UTILITIES ENGINEER-ELECTRIC 11/26/98 DATE

BENCHMARK: J8-H3 ELEVATION 981.648
LEAD & TACK IN TOP OF CONCRETE OF CATCH BASIN LOCATED IN THE NORTHWEST CORNER OF CATCH BASIN IN THE SOUTHWEST CORNER OF PALMYRITA AVENUE AND NORTHGATE SOUTHERLY

CITY OF RIVERSIDE WATER SYSTEM
APPROVED 1/15/99 DATE

REGISTERED PROFESSIONAL ENGINEER ALLEN W. MARTIN No. C 36463 EXP. 3-31-01 CIVIL STATE OF CALIFORNIA

Southland Engineering
2200 BUSINESS WAY, STE. 100
RIVERSIDE, CA. 92501
(909) 788-8488

PREPARED UNDER THE SUPERVISION OF:
ALLEN W. MARTIN R.C.E. 36463 EXP. 3-31-01 1-15-99 DATE

MARK	REVISIONS	APPR	DATE

DESIGNED BY EJ DRAWN BY AR CHECKED BY AWM

CITY OF RIVERSIDE
PUBLIC WORKS DEPARTMENT

APPROVED BY	DATE	BY
PRINCIPAL ENGINEER	6/11/98	
PARK DEPARTMENT	7/10/98	
TRAFFIC DIVISION	2/11/99	
P.W. ENGINEER MANAGER	2/16/99	
STREET SERVICES	2/16/99	

APPROVED BY R. M. Draft
PUBLIC WORKS DIRECTOR
DATE 2-16-99

STREET PLAN AND PROFILE
MICHIGAN AVENUE
MP-002-978
FROM STA. 15+00.00 TO STA. 23+25.13
HORIZ. SCALE: 1" = 40' VERT. SCALE: 1" = 4'

ACCOUNT NO. R-3521
SHEET 4 OF 6
98105

INDEXED 3-2-99 GH PC-4067-S

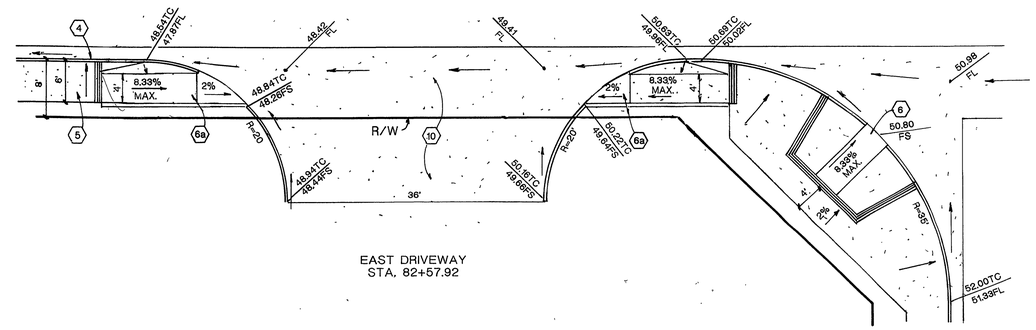

EAST DRIVEWAY
STA. 82+57.92

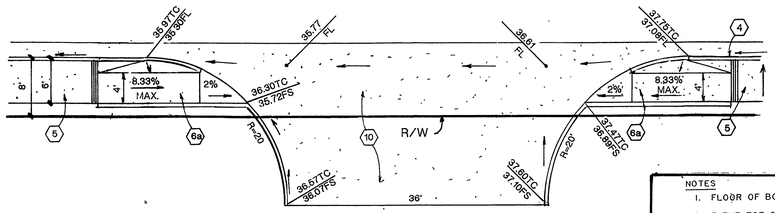

WEST DRIVEWAY
STA. 77+45.00

DETAIL "A"

SCALE: 1" = 10'

NOTES

1. FLOOR OF BOX TO BE TROWELED SMOOTH.
2. IF THE TOE OF SLOPE IS ALLOWED WITHIN THE R/W, INLET TYPE I BEGINS AT THE TOE RATHER THAN THE R/W LINE.
3. FOR OPEN DITCH (TYPE 2), THE 2' EXTENSION BEYOND THE R/W LINE IS NOT REQUIRED WHEN BACK OF WALK IS 2' OR MORE FROM THE R/W LINE; HOWEVER, PIPE SHALL EXTEND TO R/W LINE IN ANY EVENT.
4. TOP OF INLET STRUCTURE (TYPE 1 & 2) TO BE FLUSH WITH ADJACENT SURFACE WHERE PRACTICAL.
5. A HEADED STEEL STUD 5/8"x6 3/8" WITH 1" HEADS ATTACHED BY A FULL PENETRATION BUTT WELD MAY BE USED AS AN ALTERNATE ANCHOR.
6. NORMAL CURB FACE AT POINT M AND Q. B+6" AT POINT N AND P.
7. THE 3" LEG OF THE BAR 5/8"Ø ANCHORS SHALL BE PARALLEL TO THE TOP OF SIDEWALK.
8. SLOPE = 1/4" PER FOOT.

AMERICAN PUBLIC WORKS ASSOCIATION – SOUTHERN CALIFORNIA CHAPTER	STANDARD PLAN 151-0 SHEET 2 OF 2
PARKWAY DRAIN	

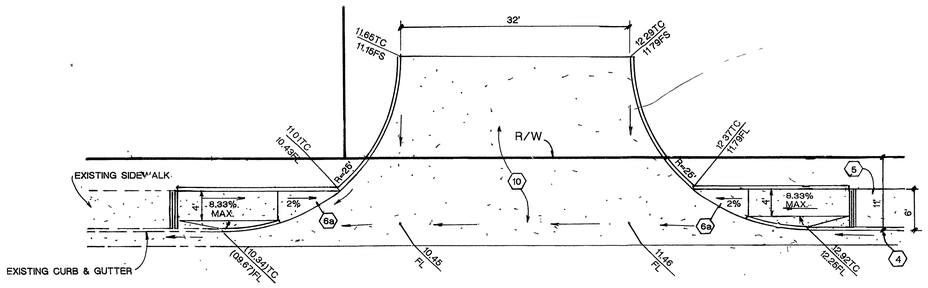

WEST DRIVEWAY
STA. 68+30.02

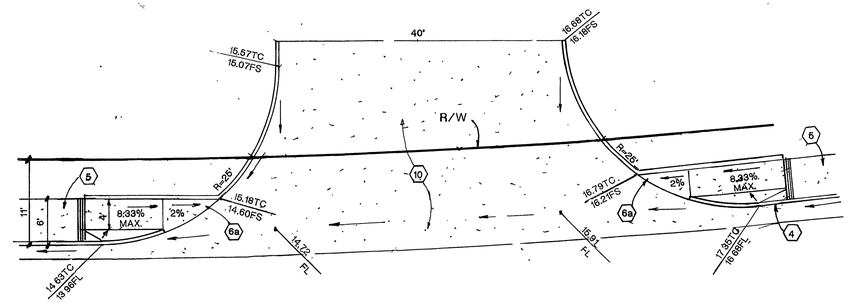

CENTER DRIVEWAY
STA. 69+74.08

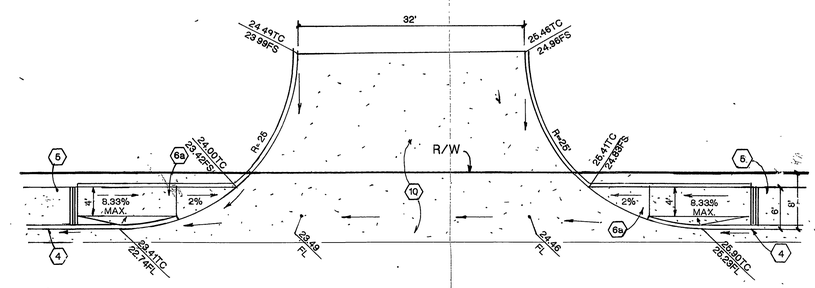

EAST DRIVEWAY
STA. 72+68.02

DETAIL "C"

SCALE: 1" = 10'

MP-006-989

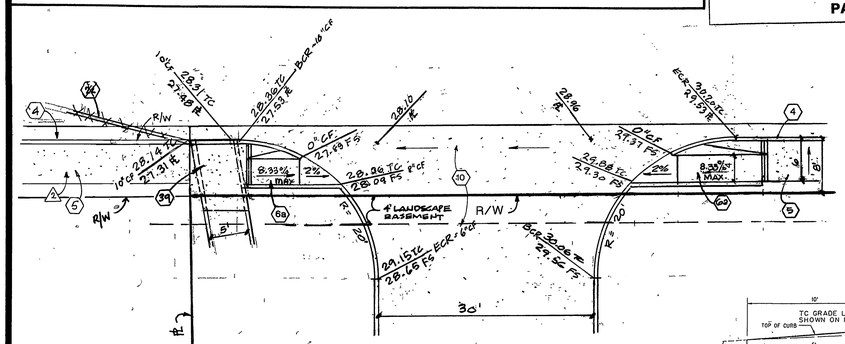

STA. 74+19.97

DETAIL "B"

SCALE: 1" = 10'

MP-006-989

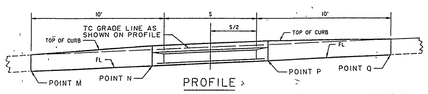

S	B	GALVANIZED STEEL ANGLE	ANCHOR	J BAR SIZE	J BAR SPACING
12"	3"	2 1/2"x2"x3/8"	2	#3	7"
18"	3"	2 1/2"x2"x3/8"	2	#3	7"
24"	3"	2 1/2"x2"x3/8"	2	#3	7"
2'-6"	3"	2 1/2"x2"x3/8"	2	#3	7"
3'-0"	3"	2 1/2"x2"x3/8"	3	#3	7"
3'-6"	3"	2 1/2"x2"x3/8"	3	#3	6"
4'-0"	3"	2 1/2"x2"x3/8"	3	#3	5"
4'-6"	4"	3 1/2"x3"x1/2"	3	#3	5 1/2"
5'-0"	4"	3 1/2"x3"x1/2"	3	#3	5"
5'-6"	4"	3 1/2"x3"x1/2"	3	#3	4"
6'-0"	4"	3 1/2"x3"x1/2"	3	#3	3 1/2"

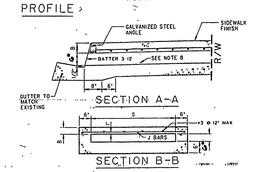

CONSTRUCTION NOTES:

(4) CONSTRUCT 8" CURB & GUTTER PER CITY OF RIVERSIDE STD DWG NO. 200, TYPE 1
(5) CONSTRUCT SIDEWALK PER CITY OF RIVERSIDE STD DWG NO. 325
(6) (6a) CONSTRUCT WHEELCHAIR RAMP PER CITY OF RIVERSIDE STD DWG NO. 304, TYPE I
(10) CONSTRUCT DRIVEWAY APPROACH
(1) (34) ~~CONSTRUCT 5' WIDE PARKWAY DRAIN INLET TYPE 2 PER APWA STD. PLAN NO. 151-2~~
(2) (22) ~~CONSTRUCT TYPE I 8" AC BERM PER CITY OF RIVERSIDE STD. DWG. NO. 250~~

AMERICAN PUBLIC WORKS ASSOCIATION – SOUTHERN CALIFORNIA CHAPTER	STANDARD PLAN 151-0 SHEET 1 OF 2
PROMULGATED BY THE APWA-AGC JOINT COOPERATIVE COMMITTEE 1993 — PARKWAY DRAIN — USE WITH STANDARD SPECIFICATIONS FOR PUBLIC WORKS CONSTRUCTION	

* AS-BUILT PER PLANS 5-16-03 GH

USA 1-800-227-2600

PACIFIC BELL TELEPHONE — APPROVED — DATE 11/27/98
APPROVED BY — CHIEF UTILITIES ENGINEER ELECTRIC — DATE 11/26/98

BENCHMARK J8-H3 ELEVATION: 981.648
LEAD & TACK IN TOP OF CONCRETE OF CATCH BASIN. LOCATED IN THE NORTHWEST CORNER OF CATCH BASIN IN THE SOUTHWEST CORNER OF PALMYRITA AVENUE AND NORTHGATE SOUTHERLY.

CITY OF RIVERSIDE WATER SYSTEM — APPROVED — DATE

REGISTERED PROFESSIONAL ENGINEER ALLEN W. MARTIN No. C 38463 EXP. 3-31-01 CIVIL STATE OF CALIFORNIA

Southland Engineering
2200 BUSINESS WAY, Ste. 100
RIVERSIDE, CA. 92501
(909) 786-8488

PREPARED UNDER THE SUPERVISION OF — ALLEN W. MARTIN R.C.E. 38463 EXP. 3-31-01 — DATE 1-15-99

MARK	REVISIONS	APPR.	DATE
2	REVISE DETAIL "B"	GHB	5/30/01
1	MP-006-989	GHB	5/30/01
	ADDED DETAIL "B"	GM	8-14-00

DESIGNED BY AWM DRAWN BY AR CHECKED BY AWM

CITY OF RIVERSIDE
PUBLIC WORKS DEPARTMENT

APPROVED BY	DATE	BY
PRINCIPAL ENGINEER	2/11/99	
PARK DEPARTMENT	2/16/99	
TRAFFIC DIVISION	2/16/99	
P.W. ENGINEER MANAGER	2/16/99	
STREET SERVICE	2/16/99	

APPROVED BY R. McGrath PUBLIC WORKS DIRECTOR — DATE 2-16-99

STREET PLAN AND PROFILE
DETAIL SHEET
MP-002-978

ACCOUNT NO. R-3521
SHEET 5 OF 6
98105

HORIZ. SCALE: 1" = NTS VERT. SCALE: 1" = NTS

INDEXED 3-2-99 GH PC-4067-S

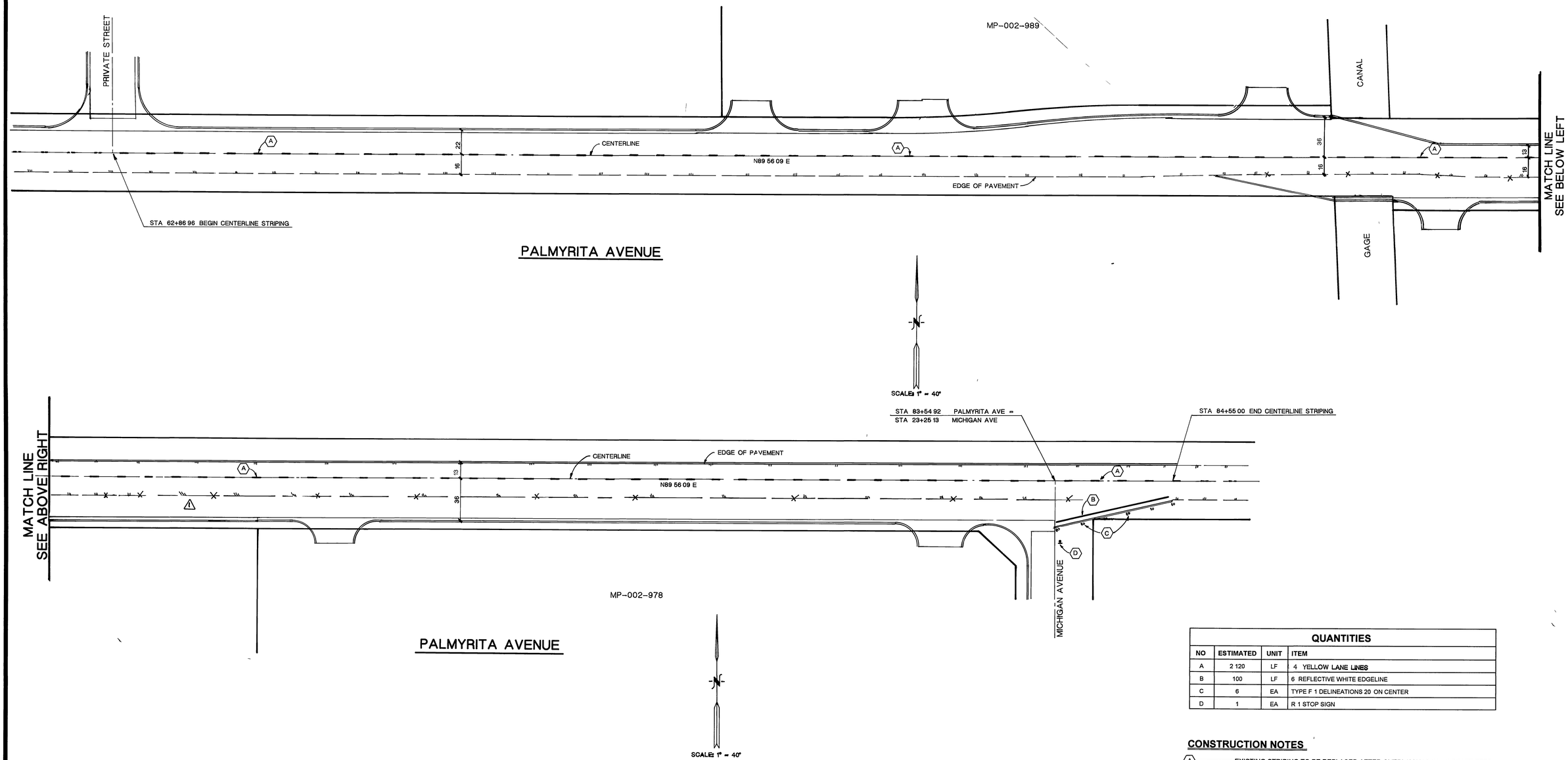

QUANTITIES			
NO	ESTIMATED	UNIT	ITEM
A	2 120	LF	4 YELLOW LANE LINES
B	100	LF	6 REFLECTIVE WHITE EDGELINE
C	6	EA	TYPE F 1 DELINEATIONS 20 ON CENTER
D	1	EA	R 1 STOP SIGN

CONSTRUCTION NOTES

(A) EXISTING STRIPING TO BE REPLACED AFTER OVERLAY HAS BEEN COMPLETED WITH 4" YELLOW LANE LINES PER CAL TRANS STD PLAN A20A DETAIL 1

(B) PAINT 6 REFLECTIVE WHITE EDGELINE PER CAL TRANS STD PLAN A20D DETAIL 38A

(C) INSTALL F 1 DELINEATORS AT 20 ON CENTER PER CITY OF RIVERSIDE STD DWG 666

(D) INSTALL STOP SIGN PER CITY OF RIVERSIDE STD DWG 662

CITY TAX CERTIFICATE NO 027049 EXP 1-25-99

*AS-BUILT PER PLANS 5-16-03 GH

USA
1-800-227-2600

BENCHMARK J8-H3 ELEVATION 981648
LEAD & TACK IN TOP OF CONCRETE OF CATCH BASIN LOCATED IN THE NORTHWEST CORNER OF CATCH BASIN IN THE SOUTHWEST CORNER OF PALMYRITA AVE AND NORTHGATE SOUTHERLY

REGISTERED PROFESSIONAL ENGINEER ALLEN W MARTIN No C 38463 EXP 3-31-01 CIVIL STATE OF CALIFORNIA

Southland Engineering
2200 BUSINESS WAY Ste 100
RIVERSIDE CA 92501
(909) 788-8488

PREPARED UNDER THE SUPERVISION OF
ALLEN W MARTIN
RCE 38463 EXP 3-31-01
1-15-99
DATE

MARK	REVISIONS	APPR	DATE
1	WIDENED PALMYRITA, S SIDE STA 72+68 TO STA 76+77±		

DESIGNED BY AWM DRAWN BY AR CHECKED BY AWM

CITY OF RIVERSIDE
PUBLIC WORKS DEPARTMENT

APPROVED BY	DATE	BY
PRINCIPAL ENGINEER	2/11/99	
PARK DEPARTMENT	01/04/99	
TRAFFIC DIVISION	2/11/99	
P W ENGINEER MANAGER	2/16/99	
STREET SERVICES	2/11/99	

APPROVED BY R McGrath
PUBLIC WORKS DIRECTOR
DATE 2-16-99

STREET PLAN AND PROFILE
STRIPING PLAN
MP-002-978
PALMYRITA AVENUE

ACCOUNT NO R-3521
SHEET 6 OF 6
98105

HORIZ SCALE 1 = 40 VERT SCALE 1" = -

INDEXED 3-2-99 GH PC-4067-S