DEPARTMENT CONTRACTOR PARTICIPATION

1. ALL FACILITIES INSTALLED BY CONTRACTOR SHALL BE INSPECTED AND APPROVED BY THE DEPARTMENT CONSTRUCTION INSPECTOR (PH. 782-5429). ANY CHANGES SHALL BE APPROVED BY THE DEPARTMENT PRIOR TO EXECUTION.
2. PROVIDE AND INSTALL ALL SUBSTRUCTURES, CONDUITS, TRENCHING, BACK FILLING AND RESURFACING AS SHOWN IN CONFORMANCE WITH THE UNDERGROUND STRUCTURE (UGS) STANDARD DRAWINGS LISTED IN THE STRUCTURE INSTALLATION SCHEDULE AND IN CONFORMANCE WITH PUBLIC WORKS' STANDARD DRAWINGS NO. 200, 325 AND 435, AND ALL SERVICE CONVERSION FACILITIES (RISER CONDUITS, HUBS, BUSHINGS, BONDS, WALL MOUNTED PULL BOXES, METER ADATPORS, WEATHERHEADS, ETC.) AS SHOWN.
3. ALL CONTRACTORS WORKING ON OR AROUND THE DEPARTMENT'S UNDERGROUND ELECTRICAL FACILITIES MUST HAVE THE PROPERLY QUALIFIED PERSONNEL AND EQUIPMENT TO PERFORM THE SPECIFIED WORK. THE CONTRACTOR WILL BE SOLELY RESPONSIBLE TO ESTABLISH AND MAINTAIN A SAFE WORKING ENVIRONMENT INCLUDING, BUT NOT LIMITED TO WORK AROUND ENERGIZED HIGH VOLTAGE FACILITIES, GAS TESTING OR CONFINED SPACES, TRAFFIC AND PROTECTION. THE DEPARTMENTS POLICY IS TO PROVIDE ONE QUALIFIED OBSERVER AFTER 24 HOURS NOTICE, TO STAND BY DURING WORK AND PROVIDE RADIO CONTACT WITH CITY OPERATIONS CONTROL.
4. THE CITY OBSERVER HAS THE AUTHORITY TO STOP THE CONTRACTOR'S WORK IF HE DETERMINES THAT ADEQUATE SAFETY PRECAUTIONS ARE NOT BEING TAKEN. HOWEVER, THE PRESENCE OF THE CITY OBSERVER DOES NOT RELIEVE THE CONTRACTOR OF HIS RESPONSIBILITY FOR INSURING SAFE AND APPROPRIATE WORK PRACTICES.
5. ACQUIRE A STREET OPENING PERMIT PRIOR TO EXCAVATING IN STREET RIGHT-OF-WAY.
6. COORDINATE INSTALLATION WITH PUBLIC WORKS' CONTRACTOR.

DEPARTMENT PARTICIPATION

1. PROVIDE AND INSTALL ALL POLE RISER CONDUITS, CABLES, TERMINATIONS AND TRANSFORMERS FROM SOURCE TO TERMINATING PULL SECTION OR PULL BOX AS SHOWN IN CONFORMANCE WITH STANDARD CONSTRUCTION METHODS. MATERIALS TO BE SPECIFIED ON JOB MATERIAL LISTS.
2. OBTAIN CIRCUIT NUMBER AND RECLOSER TYPE FROM SUBSTATION OPERATOR.
3. TRANSFORMERS ARE 1ø 12000 GRD Y/9630V-120/240V BURDS AND 1ø 12000 GRND Y/6930V-120/240V PADMOUNTED; TAILS BETWEEN CST's AND ADJACENT SERVICE BOXES ARE (3) 350kcmil AL, 600V XLPE CABLES AT 50kVA AND (5) 350kcmil AL, 600V XLPE CABLES AT 75kVA.

ABBREVIATIONS

A – BARE ALUMINUM CONDUCTOR
AA – ALLEY ARM CROSSARM
ANCH ROD – ANCHOR ROD
AR – ALUMINUM CONDUCTOR STEEL REINFORCED (ACSR)
CATV – CABLE TELEVISION
COV. – COVER – EXISTING SURFACE TO TOP OF BURIED FACILITY
C.O. – OVERHEAD STRUCTURE STANDARDS, ELECTRIC DIVISION, DEPARTMENT OF PUBLIC UTILITIES, CITY OF RIVERSIDE
DA – DOUBLE ARM CROSSARM
G. – GAS LINE
GA – GUY AND ANCHOR ROD
IN – INSTALL
I.P. – INTERSECTION POINT
IRR – IRRIGATION LINE
LT – LEFT OF CENTER LINE
MA – MASTARM STREET LIGHT
ML – MATCHLINE
QPLX – QUADRUPLEX SECONDARY CABLE
RM – REMOVE
RP – POWER POLE W/ RISER
RT – RIGHT OF CENTER LINE
SA – SINGLE ARM CROSSARM
SD – STORM DRAIN
SEC – SECONDARY
SG – SPAN GUY
SP – SERVICE POLE
SR – SECONDARY RACK
STLT – STREET LIGHT
SVC – SERVICE
SW – SEWER LINE
T – TELEPHONE LINE
TPLX – TRIPLEX SECONDARY CABLE
UGS – UNDERGROUND STRUCTURE STANDARDS, ELECTRIC DIVISION, DEPARTMENT OF PUBLIC UTILITIES, CITY OF RIVERSIDE
W – WATER LINE
WS – WATER SERVICE
ø123N – PHASE 1, PHASE 2, PHASE 3 AND NEUTRAL CONDUCTOR

SYMBOL LEGEND

QUANTITY, SIZE & TYPE OF PRIMARY CONDUIT IN TRENCH (INCLUDING COMMUNICATIONS CONDUITS)
EB35 – DENOTES EB35 CONDUIT FULLY ENCASED IN CONCRETE
SCH40 – DENOTES DIRECT BURIED SCHEDULE 40 CONDUIT
APPROXIMATE LENGTH OF RUN
QUANTITY, SIZE & TYPE OF SECONDARY CONDUIT IN TRENCH (INCLUDING SERVICE CONDUITS & STREET LIGHT CONDUITS)

CONDUIT/DUCT BANK
EXISTING FACILITIES
EXISTING OVERHEAD CONDUCTORS, POLES AND STRUCTURES TO BE REMOVED
UNDERGROUND/OVERHEAD PRIMARY – MAIN LOOP CABLE
UNDERGROUND/OVERHEAD PRIMARY – BRANCH FEEDER CABLE
REMOVE & REPLACE SIDEWALK
REMOVE & REPLACE A/C PAVEMENT
REPLACE LANDSCAPE AND OTHER MATERIALS DISTURBED

FUSED CUTOUT (F)
SINGLE POLE DISCONNECT AIR BREAK SWITCH (PD)
GANG OPERATED AIR BREAK SWITCH (PS)
POLE MOUNTED TRANSFORMER
WIRE CHANGE
FAULTED CIRCUIT INDICATOR
3 WAY RAM SWITCH (1 2 3)
AIR INSULATED SERIES 9 PADMOUNTED SWITCH
AIR INSULATED SERIES 11 PADMOUNTED SWITCH
EXISTING 4 WAY LOADBREAK JUNCTION
NEW 4 WAY LOADBREAK JUNCTION
LOADBREAK PADMOUNTED TRANSFORMER
BURD TRANSFORMER

POWER POLE
RISER POLE
DOWN GUY
SPAN GUY
POLE MOUNTED MASTARM
STREET LIGHT ELECTROLIER
VAULT
6'x10'x7' MANHOLE
6'x12'x7' MANHOLE
CST ENCLOSURE
PADMOUNTED AIR INSULATED SWITCH
PADMOUNTED TRANSFORMER
BTE ENCLOSURE
LOADBREAK JUNCTION ENCLOSURE
ELECTRIC SERVICE BOX
SERVICE DISCONNECT (RATING AS NOTED)

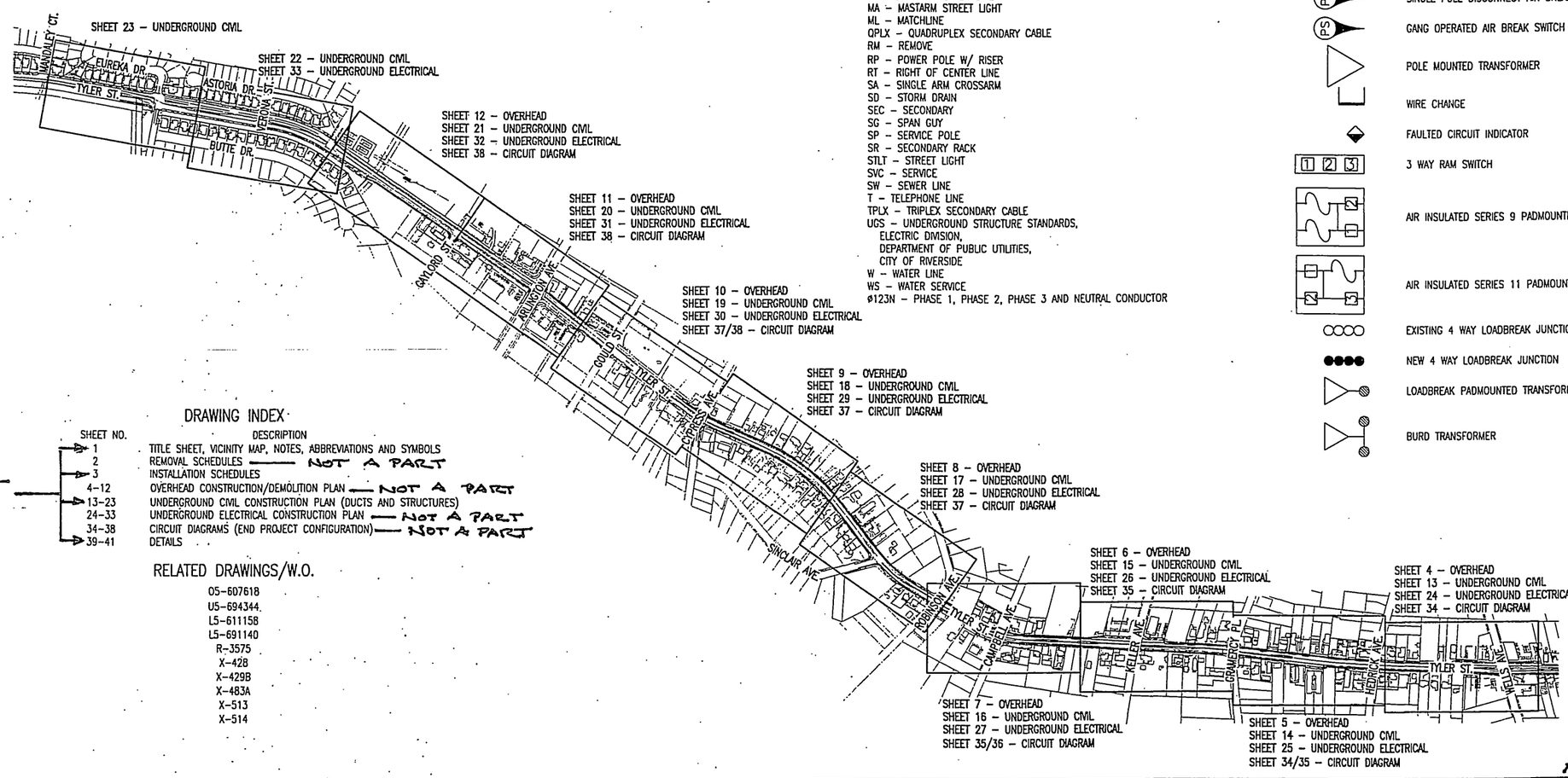

DRAWING INDEX

CONTRACT PLANS

SHEET NO.	DESCRIPTION
1	TITLE SHEET, VICINITY MAP, NOTES, ABBREVIATIONS AND SYMBOLS
2	REMOVAL SCHEDULES — NOT A PART
3	INSTALLATION SCHEDULES
4-12	OVERHEAD CONSTRUCTION/DEMOLITION PLAN — NOT A PART
13-23	UNDERGROUND CIVIL CONSTRUCTION PLAN (DUCTS AND STRUCTURES)
24-33	UNDERGROUND ELECTRICAL CONSTRUCTION PLAN — NOT A PART
34-38	CIRCUIT DIAGRAMS (END PROJECT CONFIGURATION) — NOT A PART
39-41	DETAILS

RELATED DRAWINGS/W.O.

05-607618
U5-694344
L5-611158
L5-691140
R-3575
X-428
X-429B
X-483A
X-513
X-514

REGISTERED PROFESSIONAL ENGINEER
STEVEN R. NASH
E 15310
Exp. 6/30/04
ELECTRICAL
STATE OF CALIFORNIA

FILE WITH R-3575

48 HOURS BEFORE YOU DIG CALL UNDERGROUND SERVICE ALERT 1-800-227-2600

NORTH

PRINTED 07/01/03 FOR DATE
- ☐ PRELIMINARY
- ☐ DESIGN DEVELOPMENT
- ☒ BIDDING
- ☐ CONSTRUCTION
- ☐ APPROVAL
- ☐ AS BUILT
- ☐ REVISION

Intermountain Consumer Professional Engineers, Inc.
CONSULTING ENGINEERS
1143 E. SOUTH UNION AVE.
MIDVALE, UTAH 84047
BUS (801) 255-1111 FAX 566-0068

THE DRAWINGS, DESIGNS, IDEAS, ARRANGEMENTS AND PLANS INDICATED OR REPRESENTED ARE THE SOLE PROPERTY OF INTERMOUNTAIN CONSUMER PROFESSIONAL ENGINEERS, INC. (ICPE), AND ARE SUBJECT TO THE COPYRIGHT OF ICPE OR ITS ASSIGNS. THEY WERE CREATED, EVOLVED AND DEVELOPED EXCLUSIVELY FOR USE ON, AND IN CONNECTION WITH, THE SPECIFIED PROJECT. ANY USE OF THE DRAWINGS, DESIGNS, MATERIAL OR INFORMATION CONTAINED HEREIN, INCLUDING COPYING, WHICH IS NOT EXPRESSLY AUTHORIZED BY ICPE, IS STRICTLY PROHIBITED AS AN INFRINGEMENT OF ITS COPYRIGHT AND MAY RESULT IN LIABILITY. ©ICPE 1999

No.	DESCRIPTION	BY	DATE	APPD.
C	ISSUED FOR BID	KAC	07/01/03	LAB
B	CITY COMMENTS	KAC	05/06/02	LAB
A	INITIAL DESIGN	KAC	07/17/01	LAB

REVISIONS

TITLE: CITY OF RIVERSIDE
DEPARTMENT OF PUBLIC UTILITIES
TYLER ST. OVERHEAD TO UNDERGROUND CONVERSION – U. G. UTILITY
WELLS AVE. TO JURUPA AVE.

DISTRICT NO.

Drawn By: KAC	Date 05/04/01	ENGR. LAB	Date 04/12/01	DRAWING No.		REVISION
Chk'd. By: LAB	Date 05/04/01	APPD. AJT	Date 04/12/01	OU5-604822		C
Project No. 10-245	SCALE NTS	ACCT. NO. 613000-470619		SHEET 1 OF 42		

INDEXED 5-24-04 LH

10-245_SHT01.dwg jschd07/07/03 10:12 PR ENGR: LAB

ST[illegible]ULE

SYMBOL	STRUCT. NO.	DESCRIPTION	GENERAL INFORMATION		SPECIFICATIONS ITEM NO.	SPECIFICATIONS DWG. NO.	INSTALLATION DWG. NO.
	M-8165 M-8168 M-8172 M-8175 M-8178 M-8182 M-8185 M-8187 M-8190 M-8192 M-8194 M-8199	PRECAST MANHOLE	6'x10'x7'	[illegible]	3	UGS-005	UGS-435
		TRAFFIC COVER	30" DIA.	12	A	UGS-062	UGS-435
		GRADE RING	6" HIGH	12	–	UGS-062	UGS-435
		LADDER	–	12	–	UGS-240	UGS-240.2
	C-8167 C-8169 C-8170 C-8171 C-8173 C-8174 C-8177 C-8179 C-8181 C-8184 C-8186 C-8188 C-8189 C-8193 C-8198	PRECAST CST ENCLOSURE w/ SPRING ASSISTED COVERS	5'x8'-6"x7'	15	–	UGS-760.1	UGS-761
	C-2424	REBUILD CST ENCLOSURE TOP SECTION		1		UGS-760.1	UGS-761
	PSE-8166 PSE-8176 PSE-8183 PSE-8191 PSE-8195	BOX PAD (f/ PADMOUNTED SWITCH ENCLOSURE)	6'-4"x6'-3"	5	–	UGS-011	UGS-660
	P-8196 P-XXXX	PAD (f/ 3ø PADMOUNTED TRANSFORMER)	6'x5'-6"	2	TP-6	UGS-620	UGS-621.1
	P-8164	PAD (f/ 1ø PADMOUNTED TRANSFORMER)	4'x4'-6"	1	TP-4	UGS-620	UGS-621.1
	PJC-8173 PJC-8180 PJC-8197	LOADBREAK JUNCTION ENCLOSURE w/ GROUND SLEEVE	5'x2'-6"	3	–	UGS-730 JJ2-214	UGS-730 JJ2-214
	–	ELECTRIC SERVICE BOX	17"x30"x24"	30	ESB-6	UGS-009	UGS-320
	35-??????-03 35-??????-03 35-??????-03 35-??????-03 35-??????-03 35-??????-03 35-??????-03 40-??????-03 40-??????-03 40-??????-03 40-??????-03 40-??????-03 40-??????-03 40-??????-03 40-??????-03 40-??????-03 45-??????-03 45-??????-03 45-??????-03 45-??????-03 45-??????-03 45-??????-03 50-??????-03 50-??????-03 50-??????-03 50-??????-03 50-??????-03 50-??????-03 60-??????-03 60-??????-03 60-??????-03	WOOD POLE	35' CLASS 5 35' CLASS 5 35' CLASS 5 35' CLASS 5 35' CLASS 5 35' CLASS 5 35' CLASS 5 40' CLASS 2 40' CLASS 2 40' CLASS 2 40' CLASS 2 40' CLASS 2 40' CLASS 2 40' CLASS 2 40' CLASS 2 40' CLASS 2 40' CLASS 2 45' CLASS 2 45' CLASS 2 45' CLASS 2 45' CLASS 2 50' CLASS 3 50' CLASS 3 50' CLASS 3 50' CLASS 3 50' CLASS 3 50' CLASS 3 60' CLASS 3 60' CLASS 3 60' CLASS 3	27	–	–	–
	–	DUCT BANK (NOTES 1, 2 & 3)	2" EB 35 3" EB 35 4" EB 35 5" EB 35 1" SCH 40 1 1/2" SCH 40 3" SCH 40 4" SCH 40 3" SCH 80 (RISER) 5" SCH 80 (RISER)	15485' 3060' 155' 47545' 6945' 690' 11065' 130' 440' 395'	–	UGS-100	UGS-100.1, 100.2 112, 115.1, 116 125, 125.1 PW-453
	35-??????-03 40-??????-03 40-??????-03 40-??????-03 (2) 45-??????-03 45-??????-03 45-??????-03 45-??????-03 (2) 50-??????-03 (2) 50-??????-03 50-??????-03 (2)	GUY AND ANCHOR	8'x3/4" ANCHOR ROD 20" SQUARE PLATE ANCHOR 5/16" HS GUY STRAND	15	–	CO-1216	CO-1216
	50-??????-03	GUY AND ANCHOR	10'x1" ANCHOR ROD 20" SQUARE PLATE ANCHOR 7/16" HS GUY STRAND	1	–	CO-1216	CO-1216

EQUIPMENT INSTALLATION SCHEDULE

SYMBOL	STRUCT. NO.	DESCRIPTION	SIZE	QTY	SPECIFICATIONS ITEM NO.	SPECIFICATIONS DWG. NO.	INSTALLATION DWG. NO.
	C-8167	(2) 1ø BURD TRANSFORMER OPEN Y - OPEN DELTA	25kVA, 75kVA	1	–	TX3-008	TX3-008 TX3-002
	C-8169 C-8170 C-8171 C-8174 C-8177 C-8179 C-8181 C-8184 C-8186 C-8188 C-8189 C-8193 C-8198 C-7311 C-7312 C-7313	1ø BURD TRANSFORMER	50kVA 50kVA 75kVA 75kVA 75kVA 25kVA 50kVA 50kVA 75kVA 75kVA 75kVA 25kVA 25kVA 75kVA 50kVA 50kVA	16	–	TX1-002	TX1-002
	PSE-8166	PADMOUNTED AIR INSULATED SWITCHGEAR	SERIES 11	1	–	SE3-001 TP2-460 JJ2-337.4	SE3-001 AD1-001.2 AD1-001.3
	PSE-8176 PSE-8183 PSE-8191 PSE-8195	PADMOUNTED AIR INSULATED SWITCHGEAR	SERIES 9	4	–	SE3-001 TP2-460 JJ2-337.4	SE3-001 AD1-001.2 AD1-001.3
	P-8196 P-XXXX	3ø PADMOUNTED TRANSFORMER	150kVA 225kVA	2	–	TX3-006	TX3-006
	P-8164	1ø PADMOUNTED TRANSFORMER	50kVA	1	–	TX1-001.2	TX1-001.2
	45-??????-03	1ø POLE TYPE TRANSFORMER	50kVA	1	–	–	–
	PJC-8173 PJC-8180 PJC-8197	LOADBREAK JUNCTION ENCLOSURE	4 POSITION	3	–	UGS-730 JJ2-214	UGS-730 JJ2-214
	C-8167 C-8169 C-8170 C-8171 C-8174 C-8177 C-8179 C-8181 C-8184 C-8186 C-8188 C-8189 C-8193 C-8198 C-7311 C-7312 C-7313	LOADBREAK JUNCTION	4 POSITION	51	–	JJ2-214	JJ2-214
	–	PRIMARY URD CABLE	750AL 1/0AL	14565' 35565'	–	SPEC. NO. 2-2.2	SPEC. NO. 2-2.2
	–	SECONDARY CABLE	350AL TRIPLEX 1/0AL TRIPLEX 350AL CABLE 4/0AL CABLE #8CU CABLE	7435' 7930' 1495' 3175' 510'	–	SPEC. NO. 2-2.2	SPEC. NO. 2-2.2
	–	15kV URD CABLE TERMINATOR	750AL 1/0AL	15 14	–	–	–
	–	SECONDARY BUS	8 POSITION 6 POSITION 4 POSITION	26 23 106	–	–	–

NOTES:
1. ALL PRIMARY CONDUIT BENDS SHALL BE 12.5'R MINIMUM.
2. ALL SECONDARY CONDUIT BENDS SHALL BE 4'R MINIMUM.
3. ALL STREET LIGHT CONDUIT BENDS SHALL BE 15"R MINIMUM.

48 HOURS BEFORE YOU DIG
CALL
UNDERGROUND SERVICE ALERT
1-800-227-2600

10-245_SHT03.dwg kc 07/07/03 15:27 PR ENGR: LAB

PRINTED 07/01/03 FOR DATE
- ☐ PRELIMINARY
- ☐ DESIGN DEVELOPMENT
- ☒ BIDDING
- ☐ CONSTRUCTION
- ☐ APPROVAL
- ☐ AS BUILT
- ☐ REVISION

Intermountain Consumer Professional Engineers, Inc.
CONSULTING ENGINEERS
3145 E. SOUTH UNION AVE.
MIDVALE, UTAH 84047
BUS. (801) 255-1111 FAX. 568-0068

THE DRAWINGS, DESIGNS, IDEAS, ARRANGEMENTS AND PLANS INDICATED OR REPRESENTED ARE THE SOLE PROPERTY OF INTERMOUNTAIN CONSUMER PROFESSIONAL ENGINEERS, INC. (ICPE), AND ARE SUBJECT TO THE COPYRIGHT OF ICPE OR ITS ASSIGNS. THEY WERE CREATED, EVOLVED AND DEVELOPED EXCLUSIVELY FOR USE ON, AND IN CONJUNCTION WITH, THE SPECIFIED PROJECT. ANY USE OF THE DRAWINGS, DESIGNS, MATERIAL OR INFORMATION CONTAINED HEREIN, INCLUDING COPYING, WHICH IS NOT EXPRESSLY AUTHORIZED BY ICPE, IS STRICTLY PROHIBITED AS AN INFRINGEMENT OF ITS COPYRIGHT AND MAY RESULT IN LIABILITY. ©ICPE 1999

No.	DESCRIPTION	BY	DATE	APPD.
C	ISSUED FOR BID	KAC	07/01/03	LAB
B	CITY COMMENTS	KAC	05/06/02	LAB
A	INITIAL DESIGN	KAC	07/17/01	LAB

REVISIONS

FILE WITH R-3575

TITLE
CITY OF RIVERSIDE
DEPARTMENT OF PUBLIC UTILITIES
TYLER ST. OVERHEAD TO UNDERGROUND CONVERSION
WELLS AVE. TO JURUPA AVE.

Drawn By: KAC	Date 05/04/01	ENGR. LAB	Date 04/12/01	DRAWING No. 0U5-604822	REVISION C
Chk'd. By: LAB	Date 05/04/01	APPD. AJT	Date 04/12/01		
Project No. 10-245	SCALE NTS	ACCT. NO. 613000-470619	SHEET 3 OF 42		

INDEXED 5-24-04 LH

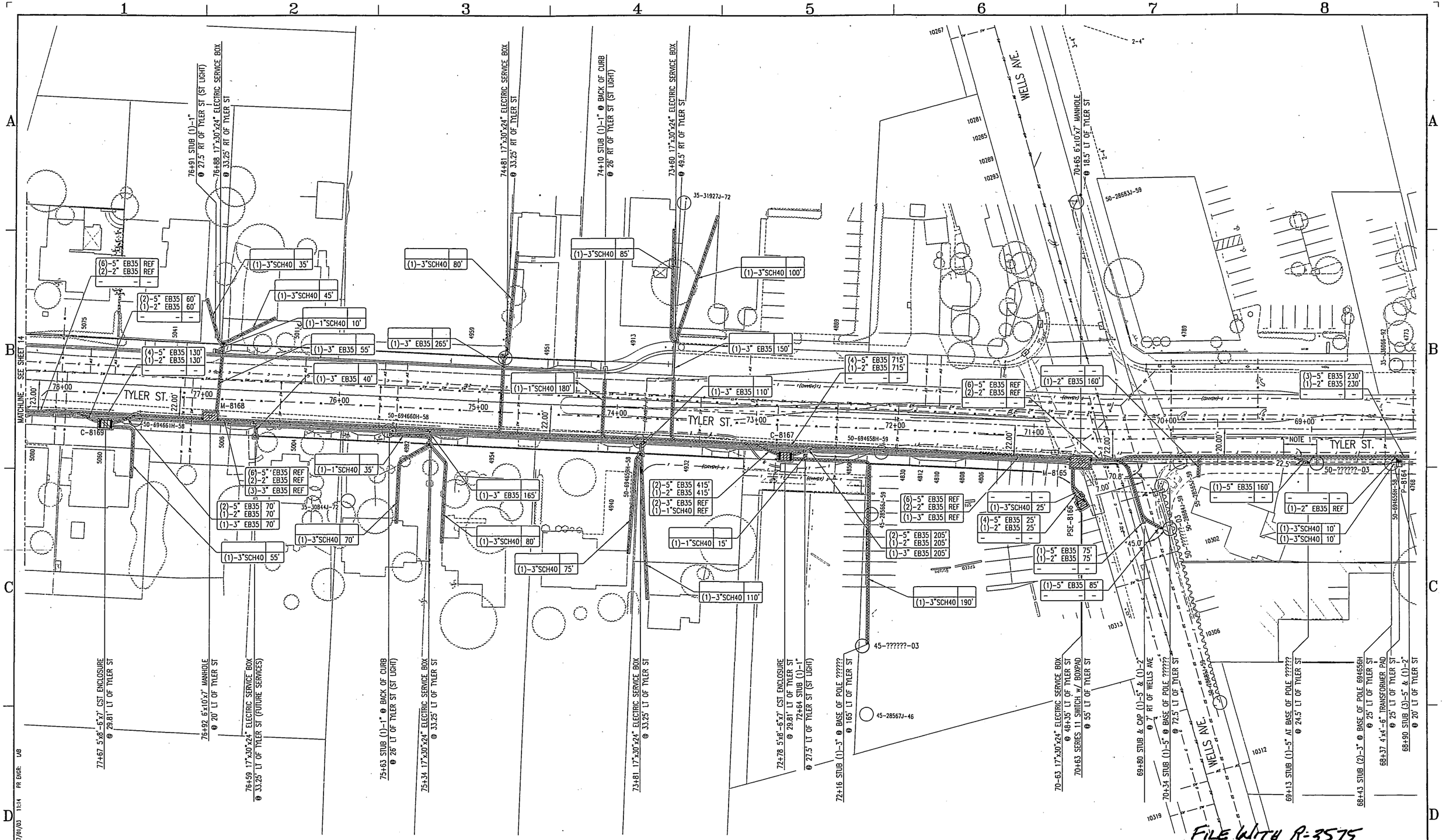

FILE WITH R-3575

48 HOURS BEFORE YOU DIG
CALL
UNDERGROUND SERVICE ALERT
1-800-227-2600

NORTH

SCALE: 1"=30'-0"

PRINTED 07/01/03 FOR
DATE

- ☐ PRELIMINARY
- ☐ DESIGN DEVELOPMENT
- ☒ BIDDING
- ☐ CONSTRUCTION
- ☐ APPROVAL
- ☐ AS BUILT
- ☐ REVISION

Intermountain Consumer Professional Engineers, Inc.
CONSULTING ENGINEERS
1148 E. SOUTH UNION AVE.
MIDVALE, UTAH 84047
BUS. (801) 255-1111 FAX 566-0088

THE DRAWINGS, DESIGNS, IDEAS, ARRANGEMENTS AND PLANS INDICATED OR REPRESENTED ARE THE SOLE PROPERTY OF INTERMOUNTAIN CONSUMER PROFESSIONAL ENGINEERS, INC. (ICPE), AND ARE SUBJECT TO THE COPYRIGHT OF ICPE OR ITS ASSIGNS. THEY WERE CREATED, EVOLVED AND DEVELOPED EXCLUSIVELY FOR USE ON, AND IN CONJUNCTION WITH, THE SPECIFIED PROJECT. ANY USE OF THE DRAWINGS, DESIGNS, MATERIAL OR INFORMATION CONTAINED HEREIN, INCLUDING COPYING, WHICH IS NOT EXPRESSLY AUTHORIZED BY ICPE, IS STRICTLY PROHIBITED AS AN INFRINGEMENT OF ITS COPYRIGHT AND MAY RESULT IN LIABILITY. © ICPE 1999

No.	DESCRIPTION	BY	DATE	APPD.
C	ISSUED FOR BID	KAC	07/01/03	LAB
B	CITY COMMENTS	KAC	05/06/02	LAB
A	INITIAL DESIGN	KAC	07/17/01	LAB

REVISIONS

[redacted]

TITLE
CITY OF RIVERSIDE
DEPARTMENT OF PUBLIC UTILITIES
TYLER ST. OVERHEAD TO UNDERGROUND CONVERSION
WELLS AVE. TO JURUPA AVE.

Drawn By: KAC	Date 05/04/01	ENGR. LAB	Date 04/12/01	DRAWING No. 0U5-604822	REVISION C
Chk'd. By: LAB	Date 05/04/01	APPD. AJT	Date 04/12/01		
Project No. 10-245	SCALE 1"=30'-0"	ACCT. NO. 613000-470619	SHEET 13 OF 42		

INDEXED 5-24-04 4H

10-245_SHT13.dwg kc 07/01/03 11:14 PR ENGR: LAB

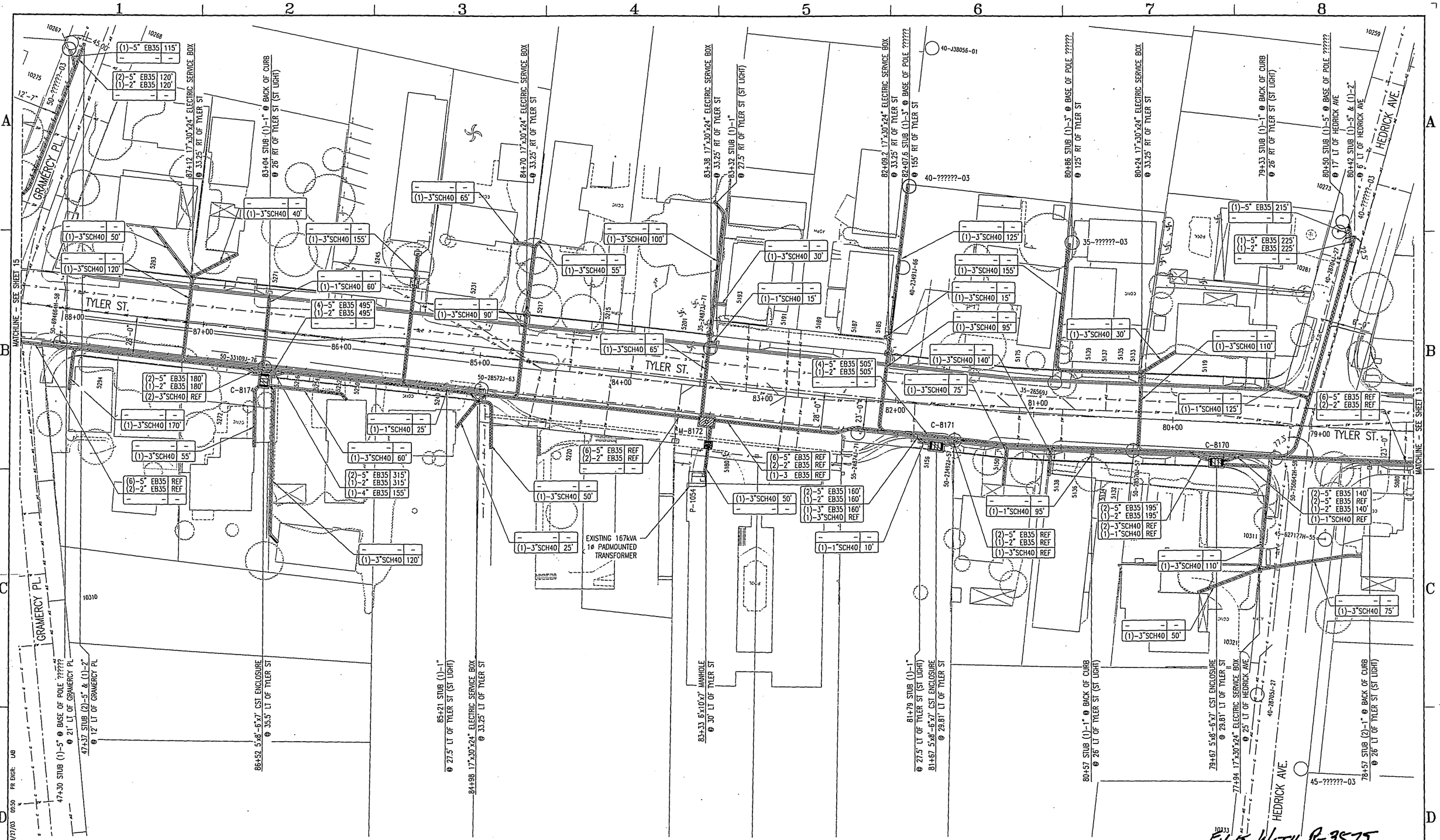

FILE WITH R-3575

48 HOURS BEFORE YOU DIG
CALL
UNDERGROUND SERVICE ALERT
1-800-227-2600

NORTH

SCALE: 1"=30'-0"

PRINTED 07/01/03 FOR
DATE

- ☐ PRELIMINARY
- ☐ DESIGN DEVELOPMENT
- ☒ BIDDING
- ☐ CONSTRUCTION
- ☐ APPROVAL
- ☐ AS BUILT
- ☐ REVISION

Intermountain Consumer Professional Engineers, Inc.
CONSULTING ENGINEERS
1148 E. SOUTH UNION AVE
MIDVALE, UTAH 84047
BUS. (801) 233-1111 FAX. 568-0088

THE DRAWINGS, DESIGNS, IDEAS, ARRANGEMENTS AND PLANS INDICATED OR REPRESENTED ARE THE SOLE PROPERTY OF INTERMOUNTAIN CONSUMER PROFESSIONAL ENGINEERS, INC. (ICPE), AND ARE SUBJECT TO THE COPYRIGHT OF ICPE OR ITS ASSIGNS. THEY WERE CREATED, DEVISED AND DEVELOPED EXCLUSIVELY FOR USE ON, AND IN CONJUNCTION WITH, THE SPECIFIED PROJECT. ANY USE OF THE GRAPHICS, DESIGNS, MATERIAL OR INFORMATION CONTAINED HEREIN, INCLUDING COPYING, WHICH IS NOT EXPRESSLY AUTHORIZED BY ICPE, IS STRICTLY PROHIBITED AS AN INFRINGEMENT OF ITS COPYRIGHT AND MAY RESULT IN LIABILITY. ©ICPE 1999

No.	DESCRIPTION	BY	DATE	APPD.
C	ISSUED FOR BID	KAC	07/01/03	LAB
B	CITY COMMENTS	KAC	05/06/02	LAB
A	INITIAL DESIGN	KAC	07/17/01	LAB

REVISIONS

TITLE
CITY OF RIVERSIDE
DEPARTMENT OF PUBLIC UTILITIES
TYLER ST. OVERHEAD TO UNDERGROUND CONVERSION
WELLS AVE. TO JURUPA AVE.

Drawn By:	KAC	Date	05/04/01	ENGR.	LAB	Date	04/12/01
Chk'd. By:	LAB	Date	05/04/01	APPD.	AJT	Date	04/12/01
Project No.	10-245	SCALE	1"=30'-0"	ACCT. NO.	613000-470619	SHEET	14 OF 42

DRAWING No. 0U5-604822
REVISION C

INDEXED 5-96-ND 1-4

10-245_Sht14.dwg kc 08/27/03 09:50 PR ENGR: LAB

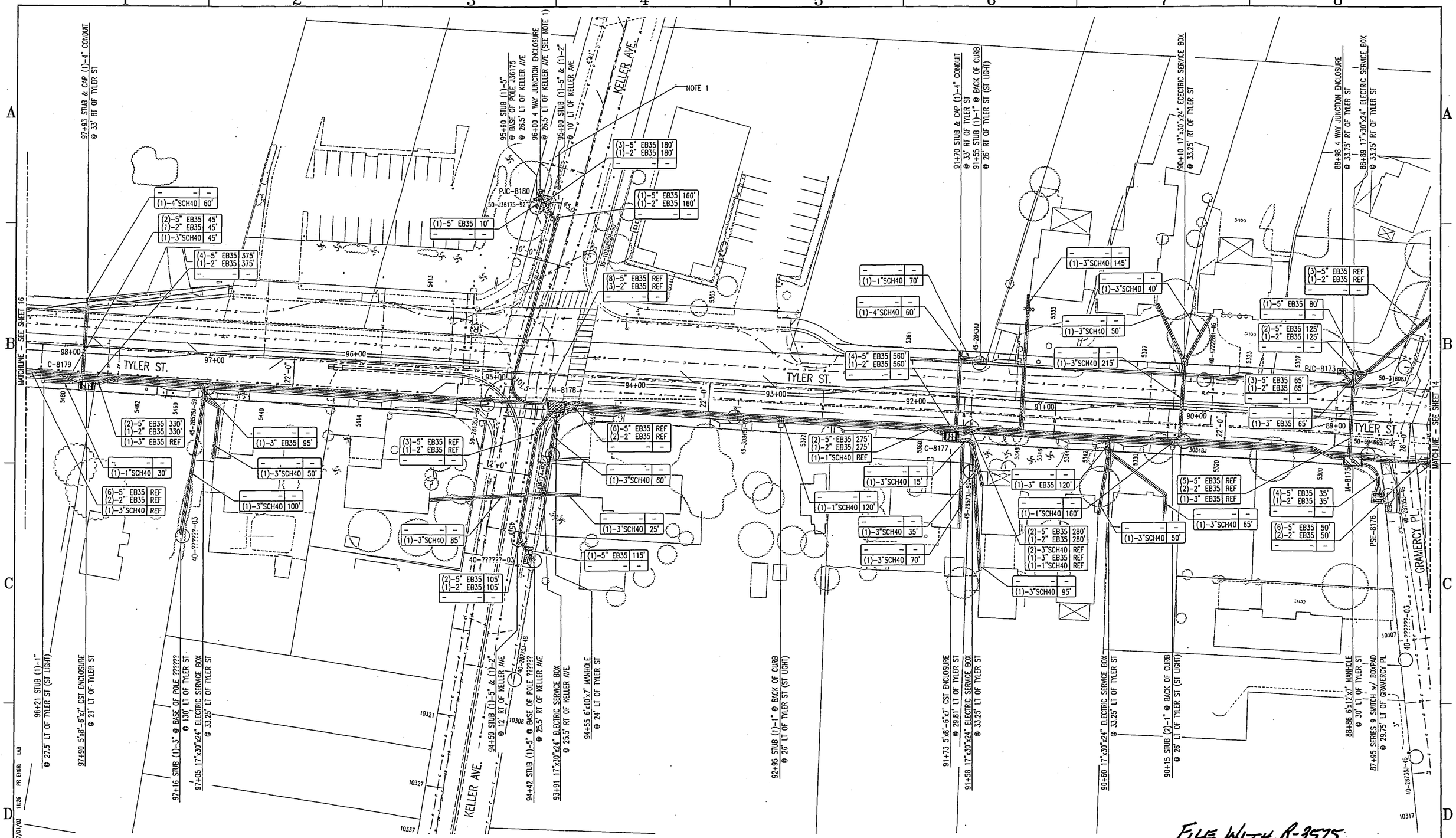

NOTE:
1. INTERCEPT EXISTING FEEDER TO TRANSFORMER P-5231 AND EXTEND TO PJC-8180.

FILE WITH R-3575

PRINTED 07/01/03 FOR
DATE

- ☐ PRELIMINARY
- ☐ DESIGN DEVELOPMENT
- ☒ BIDDING
- ☐ CONSTRUCTION
- ☐ APPROVAL
- ☐ AS BUILT
- ☐ REVISION

Intermountain Consumer Professional Engineers, Inc.
CONSULTING ENGINEERS
1140 S. SOUTH UNION AVE.
MIDVALE, UTAH 84047
BUS (801) 255-1111 FAX 566-0088

THE DRAWINGS, DESIGNS, IDEAS, ARRANGEMENTS AND PLANS INDICATED OR REPRESENTED ARE THE SOLE PROPERTY OF INTERMOUNTAIN CONSUMER PROFESSIONAL ENGINEERS, INC. (ICPE), AND ARE SUBJECT TO THE COPYRIGHT OF ICPE OR ITS ASSIGNS. THEY WERE CREATED, CHOSEN AND DEVELOPED EXCLUSIVELY FOR USE ON, AND IN CONJUNCTION WITH, THE SPECIFIED PROJECT. ANY USE OF THE DRAWINGS, DESIGNS, MATERIAL OR INFORMATION CONTAINED HEREIN, INCLUDING COPYING, WHICH IS NOT EXPRESSLY AUTHORIZED BY ICPE, IS STRICTLY PROHIBITED AS AN INFRINGEMENT OF ITS COPYRIGHT AND MAY RESULT IN LIABILITY. ©ICPE 1999

No.	DESCRIPTION	BY	DATE	APPD.
C	ISSUED FOR BID	KAC	07/01/03	LAB
B	CITY COMMENTS	KAC	05/06/02	LAB
A	INITIAL DESIGN	KAC	07/17/01	LAB

REVISIONS

TITLE
CITY OF RIVERSIDE
DEPARTMENT OF PUBLIC UTILITIES
TYLER ST. OVERHEAD TO UNDERGROUND CONVERSION
WELLS AVE. TO JURUPA AVE.

Drawn By: KAC	Date 05/04/01	ENGR. LAB	Date 04/12/01	DRAWING No. 0U5-604822		REVISION C
Chk'd. By: LAB	Date 05/04/01	APPD. AJT	Date 04/12/01			
Project No. 10-245	SCALE 1"=30'-0"	ACCT. NO. 613000-470619		SHEET 15 OF 42		

INDEXED 5-24-04 LAH

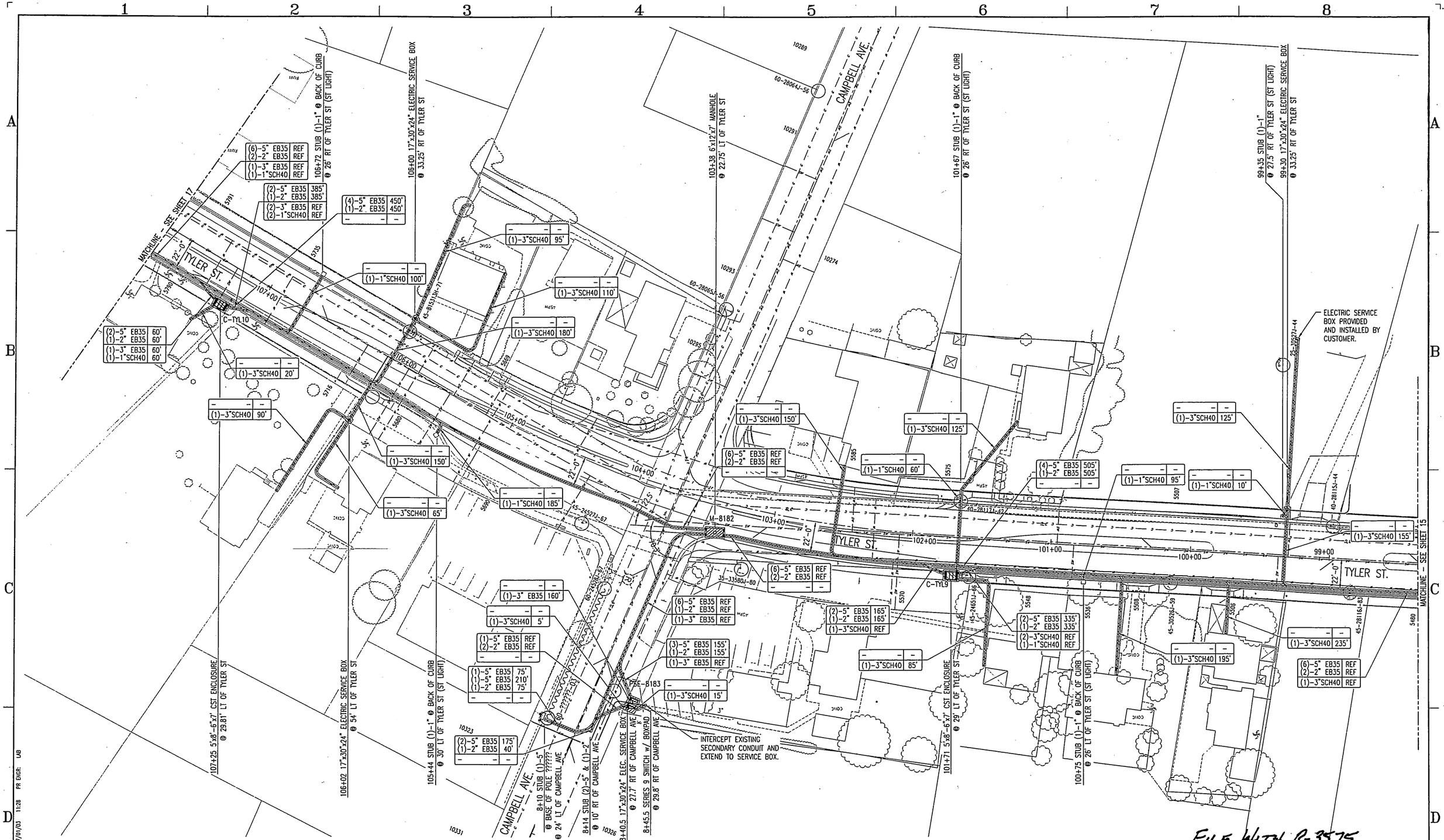

FILE WITH R-3575

48 HOURS BEFORE YOU DIG CALL UNDERGROUND SERVICE ALERT 1-800-227-2600

NORTH

SCALE: 1"=30'-0"

PRINTED 07/01/03 FOR DATE

- ☐ PRELIMINARY
- ☐ DESIGN DEVELOPMENT
- ☒ BIDDING
- ☐ CONSTRUCTION
- ☐ APPROVAL
- ☐ AS BUILT
- ☐ REVISION

Intermountain Consumer Professional Engineers, Inc.
CONSULTING ENGINEERS
1148 E. SOUTH UNION AVE.
MIDVALE, UTAH 84047
BUS. (801) 255-1111 FAX. 568-0068

THE DRAWINGS, DESIGNS, IDEAS, ARRANGEMENTS AND PLANS INDICATED OR REPRESENTED ARE THE SOLE PROPERTY OF INTERMOUNTAIN CONSUMER PROFESSIONAL ENGINEERS, INC. (ICPE), AND ARE SUBJECT TO THE COPYRIGHT OF ICPE OR ITS ASSIGNS. THEY WERE CREATED, EVOLVED AND DEVELOPED EXCLUSIVELY FOR USE ON, AND IN CONJUNCTION WITH, THE SPECIFIED PROJECT. ANY USE OF THE DRAWINGS, DESIGNS, MATERIAL OR INFORMATION CONTAINED HEREIN, INCLUDING COPYING, WHICH IS NOT EXPRESSLY AUTHORIZED BY ICPE, IS STRICTLY PROHIBITED AS AN INFRINGEMENT OF ITS COPYRIGHT AND MAY RESULT IN LIABILITY. © ICPE 1999

No.	DESCRIPTION	BY	DATE	APPD.
C	ISSUED FOR BID	KAC	07/01/03	LAB
B	CITY COMMENTS	KAC	05/06/02	LAB
A	INITIAL DESIGN	KAC	07/17/01	LAB

REVISIONS

TITLE
CITY OF RIVERSIDE
DEPARTMENT OF PUBLIC UTILITIES
TYLER ST. OVERHEAD TO UNDERGROUND CONVERSION
WELLS AVE. TO JURUPA AVE.

Drawn By:	KAC	Date	05/04/01	ENGR.	LAB	Date	04/12/01
Chk'd. By:	LAB	Date	05/04/01	APPD.	AJT	Date	04/12/01
Project No.	10-245	SCALE	1"=30'-0"	ACCT. NO.	613000-470619	SHEET	16 OF 42

DRAWING No. 0U5-604822 REVISION C

INDEXED 5-24-04 LAB

10-245_SHT16.dwg kc 07/01/03 11:28 PR ENGR: LAB

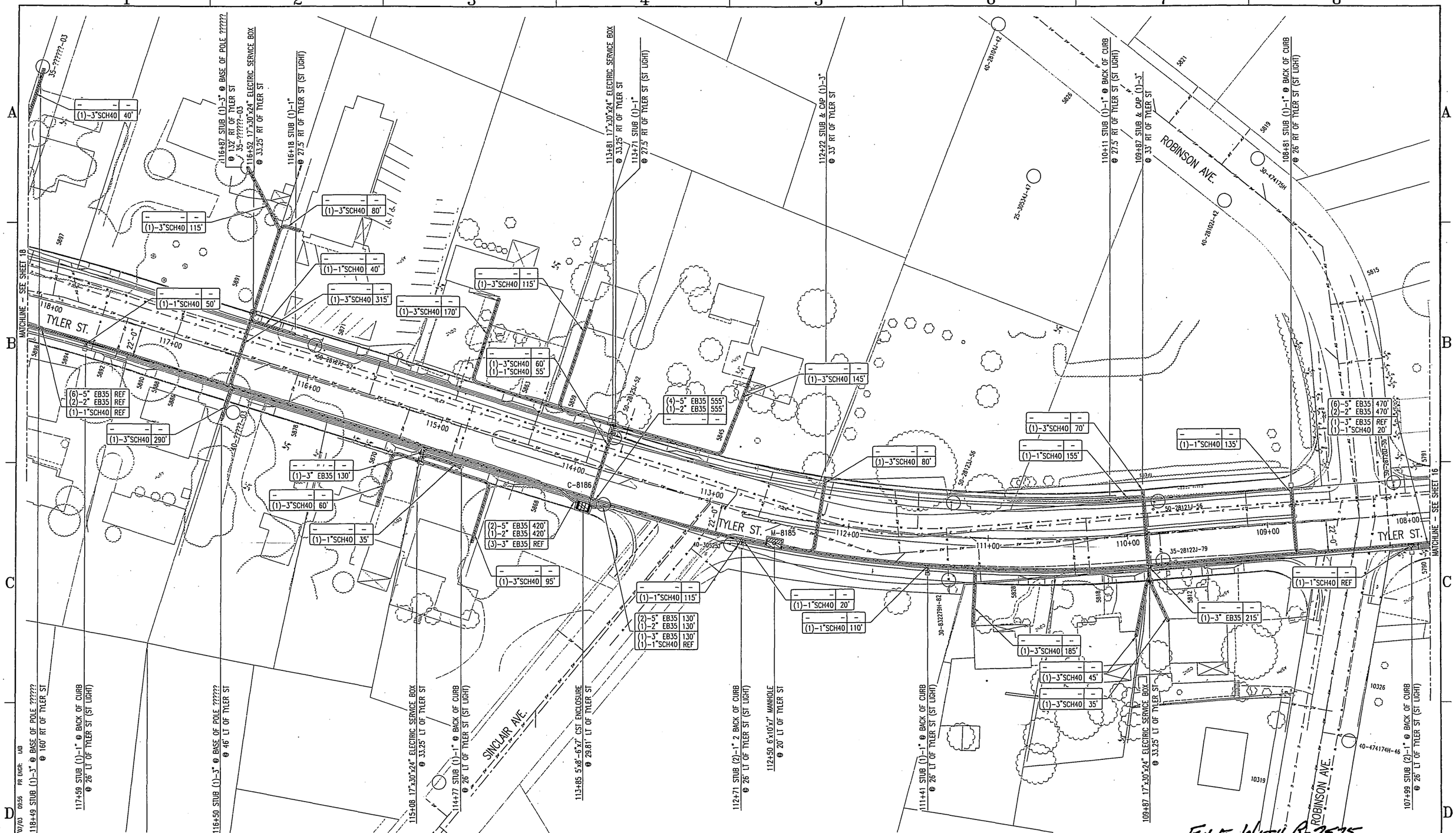

48 HOURS BEFORE YOU DIG
CALL
UNDERGROUND SERVICE ALERT
1-800-227-2600

NORTH

SCALE: 1"=30'-0"

PRINTED 07/01/03 FOR
DATE
- ☐ PRELIMINARY
- ☐ DESIGN DEVELOPMENT
- ☒ BIDDING
- ☐ CONSTRUCTION
- ☐ APPROVAL
- ☐ AS BUILT
- ☐ REVISION

Intermountain Consumer Professional Engineers, Inc.
CONSULTING ENGINEERS
1165 E. BEATIE UNION AVE.
MIDVALE, UTAH 84047
(801) 255-1111 FAX 566-0088

THE DRAWINGS, DESIGNS, IDEAS, ARRANGEMENTS AND PLANS INDICATED OR REPRESENTED ARE THE SOLE PROPERTY OF INTERMOUNTAIN CONSUMER PROFESSIONAL ENGINEERS, INC. (ICPE), AND ARE SUBJECT TO THE COPYRIGHT OF ICPE OR ITS ASSIGNS. THEY WERE CREATED, EVOLVED AND DEVELOPED EXCLUSIVELY FOR USE ON, AND IN CONJUNCTION WITH, THE SPECIFIED PROJECT. ANY USE OF THE DRAWINGS, DESIGNS, MATERIAL OR INFORMATION CONTAINED HEREIN, INCLUDING COPYING, WHICH IS NOT EXPRESSLY AUTHORIZED BY ICPE, IS STRICTLY PROHIBITED AS AN INFRINGEMENT OF ITS COPYRIGHT AND MAY RESULT IN LIABILITY. ©ICPE 1999

No.	DESCRIPTION	BY	DATE	APPD.
C	ISSUED FOR BID	KAC	07/01/03	LAB
B	CITY COMMENTS	KAC	05/06/02	LAB
A	INITIAL DESIGN	KAC	07/17/01	LAB

REVISIONS

[redacted]

TITLE
CITY OF RIVERSIDE
DEPARTMENT OF PUBLIC UTILITIES
TYLER ST. OVERHEAD TO UNDERGROUND CONVERSION
WELLS AVE. TO JURUPA AVE.

Drawn By:	KAC	Date	05/04/01	ENGR.	LAB	Date	04/12/01
Chk'd. By:	LAB	Date	05/04/01	APPD.	AJT	Date	04/12/01
Project No.	10-245	SCALE	1"=30'-0"	ACCT. NO.	613000-470619	SHEET	17 OF 42

DRAWING No. 0U5-604822
REVISION C

10-245_SH17.dwg 10:24 PM 07/07/03 PR ENGR: LAB

FILE WITH R-3575

INDEXED 5-24-04 LH

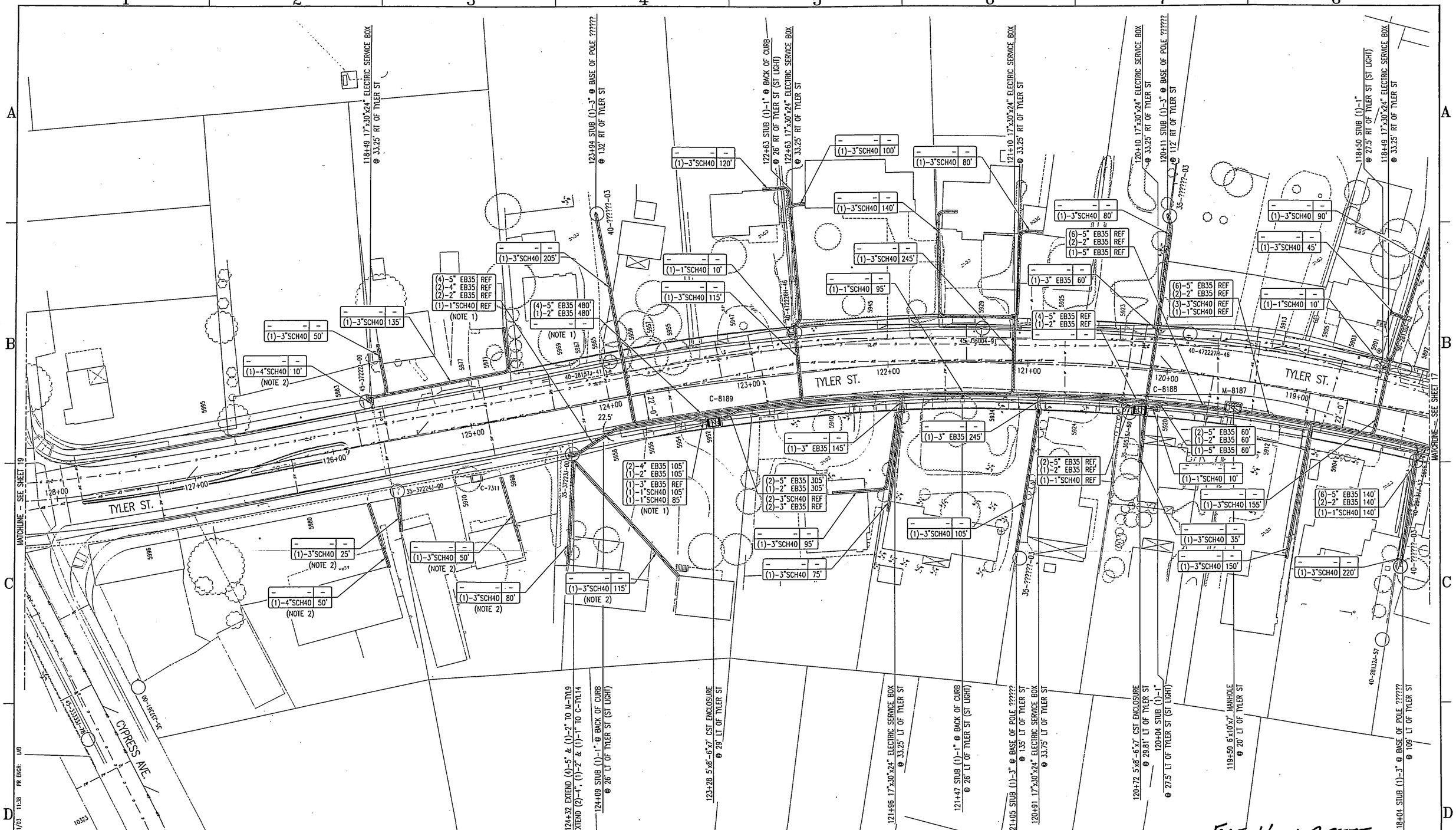

FILE WITH R-3575

48 HOURS BEFORE YOU DIG
CALL
UNDERGROUND SERVICE ALERT
1-800-227-2600

NOTES:
1. INTERCEPT (4) 5" PVC CONDUITS AND (1) 2" PVC CONDUIT AT STATION 124+32 AND EXTEND TO M-TYL9. INTERCEPT (2) 4" PVC CONDUITS, (1) 2" PVC CONDUIT AND (1) 1" PVC CONDUIT AT STATION 124+32 AND EXTEND TO C-TYL14.
2. INTERCEPT EXISTING SECONDARY CONDUIT AND EXTEND AS SHOWN IN PLAN. SEE PLAN FOR SIZE OF CONDUIT.

NORTH

SCALE: 1"=30'-0"

PRINTED 07/01/03 FOR
DATE

- ☐ PRELIMINARY
- ☐ DESIGN DEVELOPMENT
- ☒ BIDDING
- ☐ CONSTRUCTION
- ☐ APPROVAL
- ☐ AS BUILT
- ☐ REVISION

Intermountain Consumer Professional Engineers, Inc.
CONSULTING ENGINEERS
1145 E. SOUTH UNION AVE.
MIDVALE, UTAH 84047
(801) 255-1111 FAX 566-0088

THE DRAWINGS, DESIGNS, IDEAS, ARRANGEMENTS AND PLANS INDICATED OR REPRESENTED ARE THE SOLE PROPERTY OF INTERMOUNTAIN CONSUMER PROFESSIONAL ENGINEERS, INC. (ICPE), AND ARE SUBJECT TO THE COPYRIGHT OF ICPE OR ITS ASSOCS. THEY WERE CREATED, EVOLVED AND DEVELOPED EXCLUSIVELY FOR USE ON, AND IN CONNECTION WITH, THE SPECIFIED PROJECT. ANY USE OF THE DRAWINGS, DESIGNS, MATERIAL OR INFORMATION CONTAINED HEREIN, INCLUDING COPYING, WHICH IS NOT EXPRESSLY AUTHORIZED BY ICPE, IS STRICTLY PROHIBITED AS AN INFRINGEMENT OF ITS COPYRIGHT AND MAY RESULT IN LIABILITY. © ICPE 1999

No.	DESCRIPTION	BY	DATE	APPD.
C	ISSUED FOR BID	KAC	07/01/03	LAB
B	CITY COMMENTS	KAC	05/06/02	LAB
A	INITIAL DESIGN	KAC	07/17/01	LAB

REVISIONS

[redacted]

TITLE
CITY OF RIVERSIDE
DEPARTMENT OF PUBLIC UTILITIES
TYLER ST. OVERHEAD TO UNDERGROUND CONVERSION
WELLS AVE. TO JURUPA AVE.

Drawn By:	KAC	Date	05/04/01	ENGR.	LAB	Date	04/12/01
Chk'd. By:	LAB	Date	05/04/01	APPD.	AJT	Date	04/12/01
Project No.	10-245	SCALE	1"=30'-0"	ACCT. NO.	613000-470619	SHEET	18 OF 42

DRAWING No. 0U5-604822
REVISION C

INDEXED 5-24-04 GH

10-245_SH18.dwg kc 07/01/03 11:38 PR ENGR: LAB

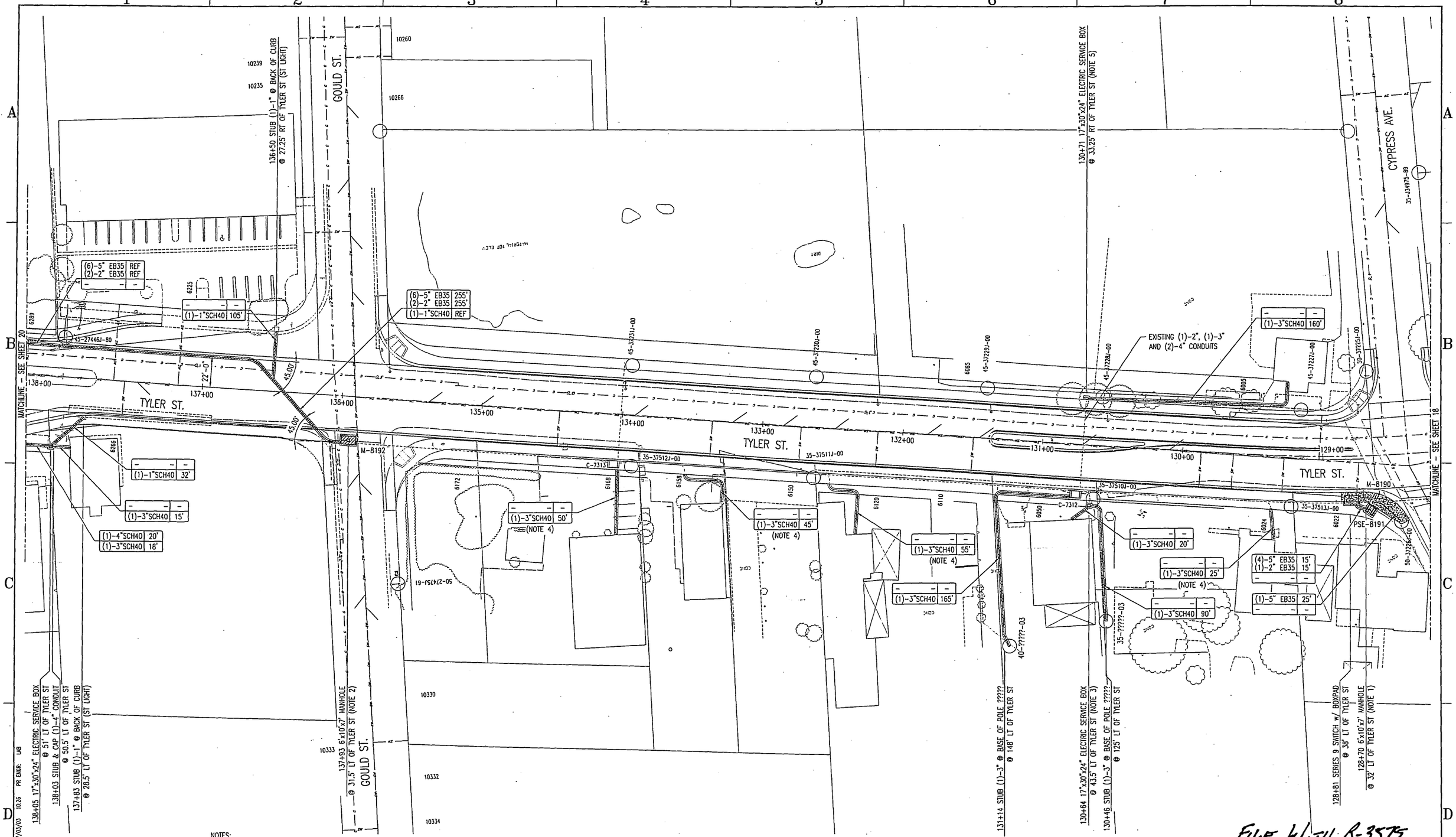

48 HOURS BEFORE YOU DIG
CALL
UNDERGROUND SERVICE ALERT
1-800-227-2600

NOTES:
1. INSTALL MANHOLE OVER EXISTING CONDUIT BANK. REMOVE CONDUITS WITHIN MANHOLE.
2. LOCATE EXISTING CONDUIT ENDS AND INSTALL MANHOLE AT END OF CONDUIT BANK.
3. INSTALL ELECTRIC SERVICE BOX OVER END OF EXISTING CONDUIT.
4. LOCATE EXISTING SERVICE CONDUIT STUB AND EXTEND TO SERVICE LOCATION.
5. INSTALL ELECTRIC SERVICE BOX AT END OF EXISTING (1)-3" SECONDARY CONDUIT.

NORTH

SCALE: 1"=30'-0"

PRINTED 07/01/03 FOR DATE
- ☐ PRELIMINARY
- ☐ DESIGN DEVELOPMENT
- ☒ BIDDING
- ☐ CONSTRUCTION
- ☐ APPROVAL
- ☐ AS BUILT
- ☐ REVISION

Intermountain Consumer Professional Engineers, Inc.
CONSULTING ENGINEERS
1145 E. SOUTH UNION AVE.
MIDVALE, UTAH 84047
(801) 255-1111 FAX 566-0088

THE DRAWINGS, DESIGNS, IDEAS, ARRANGEMENTS AND PLANS INDICATED OR REPRESENTED ARE THE SOLE PROPERTY OF INTERMOUNTAIN CONSUMER PROFESSIONAL ENGINEERS, INC. (ICPE), AND ARE SUBJECT TO THE COPYRIGHT OF ICPE OR ITS ASSIGNS. THEY WERE CREATED, EVOLVED AND DEVELOPED EXCLUSIVELY FOR USE ON, AND IN CONNECTION WITH, THE SPECIFIED PROJECT. ANY USE OF THE DRAWINGS, DESIGNS, MATERIAL OR INFORMATION CONTAINED HEREIN, INCLUDING COPYING, WHICH IS NOT EXPRESSLY AUTHORIZED BY ICPE, IS STRICTLY PROHIBITED AS AN INFRINGEMENT OF ITS COPYRIGHT AND MAY RESULT IN LIABILITY. ©ICPE 1999

No.	DESCRIPTION	BY	DATE	APPD.
C	ISSUED FOR BID	KAC	07/01/03	LAB
B	CITY COMMENTS	KAC	05/05/02	LAB
A	INITIAL DESIGN	KAC	07/17/01	LAB

REVISIONS

[redacted]

TITLE
CITY OF RIVERSIDE
DEPARTMENT OF PUBLIC UTILITIES
TYLER ST. OVERHEAD TO UNDERGROUND CONVERSION
WELLS AVE. TO JURUPA AVE.

Drawn By: KAC	Date 05/04/01	ENGR. LAB	Date 04/12/01	DRAWING No. 0U5-604822		REVISION C
Chk'd. By: LAB	Date 05/04/01	APPD. AJT	Date 04/12/01			
Project No. 12-245	SCALE 1"=30'-0"	ACCT. NO. 613000-470619		SHEET 19 OF 42		

FILE WITH R-3575

INDEXED 5-28-04

10-245_SHT10.dwg jschd07/01/03 10:26 PR ENGR: LAB

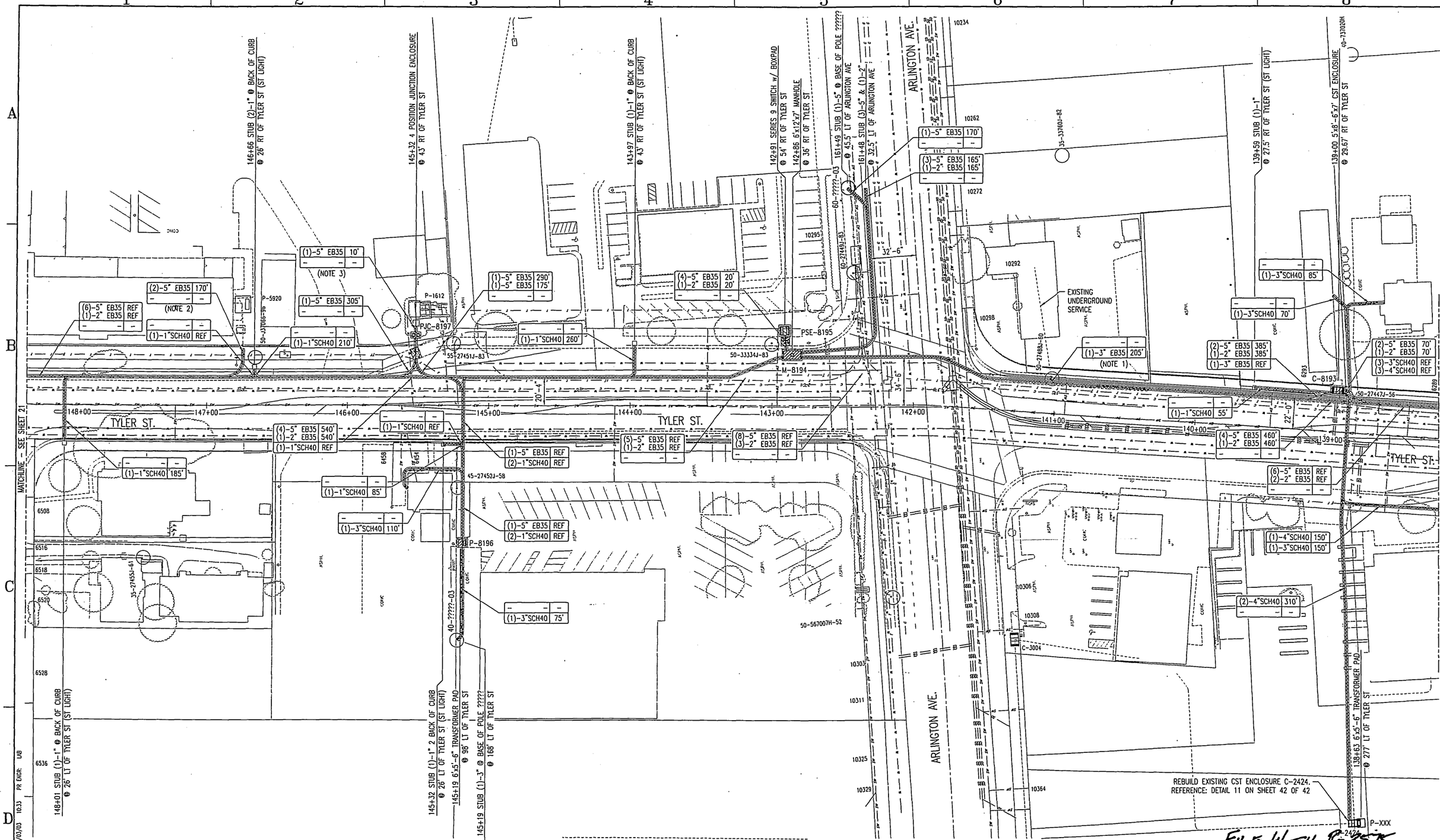

FILE WITH R-3515

48 HOURS BEFORE YOU DIG
CALL
UNDERGROUND SERVICE ALERT
1-800-227-2600

NOTES:
1. INTERCEPT EXISTING SECONDARY CONDUIT AND COUPLE TO NEW CONDUIT FROM C-TYL15.
2. INTERCEPT EXISTINT CONDUIT FROM P-5920 AND EXTEND TO PJC-TYL3.
3. INSTALL CONDUIT INTO PRIMARY COMPARTMENT OF P-1612.

NORTH

SCALE: 1"=30'-0"

PRINTED 07/01/03 FOR DATE

- ☐ PRELIMINARY
- ☐ DESIGN DEVELOPMENT
- ☒ BIDDING
- ☐ CONSTRUCTION
- ☐ APPROVAL
- ☐ AS BUILT
- ☐ REVISION

Intermountain Consumer Professional Engineers, Inc.
CONSULTING ENGINEERS
1165 E. SOUTH BOWN AVE.
MURRAY, UTAH 84107
BUS. (801) 266-1111 FAX. 266-0068

THE DRAWINGS, DESIGNS, IDEAS, ARRANGEMENTS AND PLANS INDICATED OR REPRESENTED ARE THE SOLE PROPERTY OF INTERMOUNTAIN CONSUMER PROFESSIONAL ENGINEERS, INC. (ICPE) AND ARE SUBJECT TO THE COPYRIGHT OF ICPE OR ITS ASSIGNS. THEY WERE CREATED, EVOLVED AND DEVELOPED EXCLUSIVELY FOR USE ON AND IN CONNECTION WITH THE SPECIFIED PROJECT. ANY USE OF THE DRAWINGS, DESIGNS, MATERIAL OR INFORMATION CONTAINED HEREIN, INCLUDING COPYING, WHICH IS NOT EXPRESSLY AUTHORIZED BY ICPE, IS STRICTLY PROHIBITED AS AN INFRINGEMENT OF ITS COPYRIGHT AND MAY RESULT IN LIABILITY. © ICPE 1999

No.	DESCRIPTION	BY	DATE	APPD.
C	ISSUED FOR BID	KAC	07/01/03	LAB
B	CITY COMMENTS	KAC	05/06/02	LAB
A	INITIAL DESIGN	KAC	07/17/01	LAB

REVISIONS

[redacted]

TITLE
CITY OF RIVERSIDE
DEPARTMENT OF PUBLIC UTILITIES
TYLER ST. OVERHEAD TO UNDERGROUND CONVERSION
WELLS AVE. TO JURUPA AVE.

Drawn By:	KAC	Date	05/04/01	ENGR.	LAB	Date	04/12/01
Chk'd. By:	LAB	Date	05/04/01	APPD.	AJT	Date	04/12/01
Project No.	10-245	SCALE	1"=30'-0"	ACCT. NO.	613000-470619		

DRAWING No. 0U5-604822
REVISION C
SHEET 20 OF 42

10-245_SHT20.dwg jch:07/03/03 10:33 PR ENGR: LAB

INDEXED TO 268M 1-H

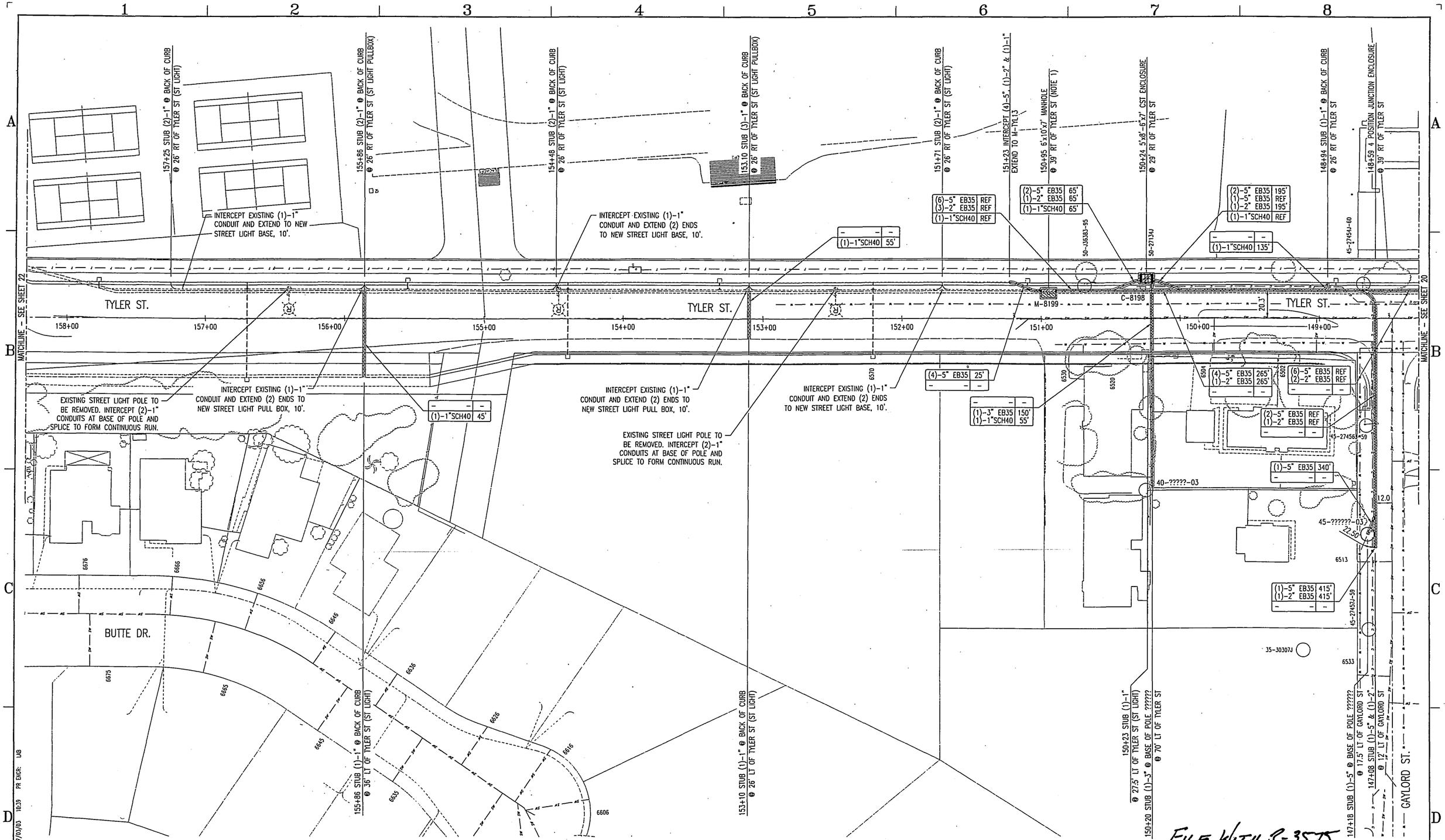

FILE WITH R-3575

PRINTED 07/01/03 FOR
DATE

- ☐ PRELIMINARY
- ☐ DESIGN DEVELOPMENT
- ☒ BIDDING
- ☐ CONSTRUCTION
- ☐ APPROVAL
- ☐ AS BUILT
- ☐ REVISION

Intermountain Consumer Professional Engineers, Inc.
CONSULTING ENGINEERS
1420 E. SOUTH WINDER AVE.
SALT LAKE CITY, UTAH
BUS. (801) 533-1111 FAX. 566-0066

THE DRAWINGS, DESIGNS, IDEAS, ARRANGEMENTS AND PLANS INDICATED OR REPRESENTED ARE THE SOLE PROPERTY OF INTERMOUNTAIN CONSUMER PROFESSIONAL ENGINEERS, INC. (ICPE), AND ARE SUBJECT TO THE COPYRIGHT OF ICPE OR ITS ASSOCIES. THEY WERE CREATED, EVOLVED AND DEVELOPED EXCLUSIVELY FOR USE ON, AND IN CONJUNCTION WITH, THE SPECIFIED PROJECT. ANY USE OF THE DRAWINGS, DESIGNS, MATERIAL OR INFORMATION CONTAINED HEREIN, INCLUDING COPYING, WHICH IS NOT EXPRESSLY AUTHORIZED BY ICPE, IS STRICTLY PROHIBITED AS AN INFRINGEMENT OF ITS COPYRIGHT AND MAY RESULT IN LIABILITY. ©ICPE 1999

No.	DESCRIPTION	BY	DATE	APPD.
C	ISSUED FOR BID	KAC	07/01/03	LAB
B	CITY COMMENTS	KAC	05/06/02	LAB
A	INITIAL DESIGN	KAC	07/17/01	LAB

REVISIONS

[redacted]

TITLE

CITY OF RIVERSIDE

DEPARTMENT OF PUBLIC UTILITIES
TYLER ST. OVERHEAD TO UNDERGROUND CONVERSION
WELLS AVE. TO JURUPA AVE.

Drawn By:	KAC	Date	05/04/01	ENGR.	LAB	Date	04/12/01
Chk'd. By:	LAB	Date	05/04/01	APPD.	AJT	Date	04/12/01
Project No.	10-245	SCALE	1"=30'-0"	ACCT. NO.	613000-470619		

DRAWING No. 0U5-604822
REVISION C
SHEET 21 OF 42

INDEXED 5-24-04 KH

10-245_SHT21.dwg jsch07/03/03 10:39 PR ENGR: LAB

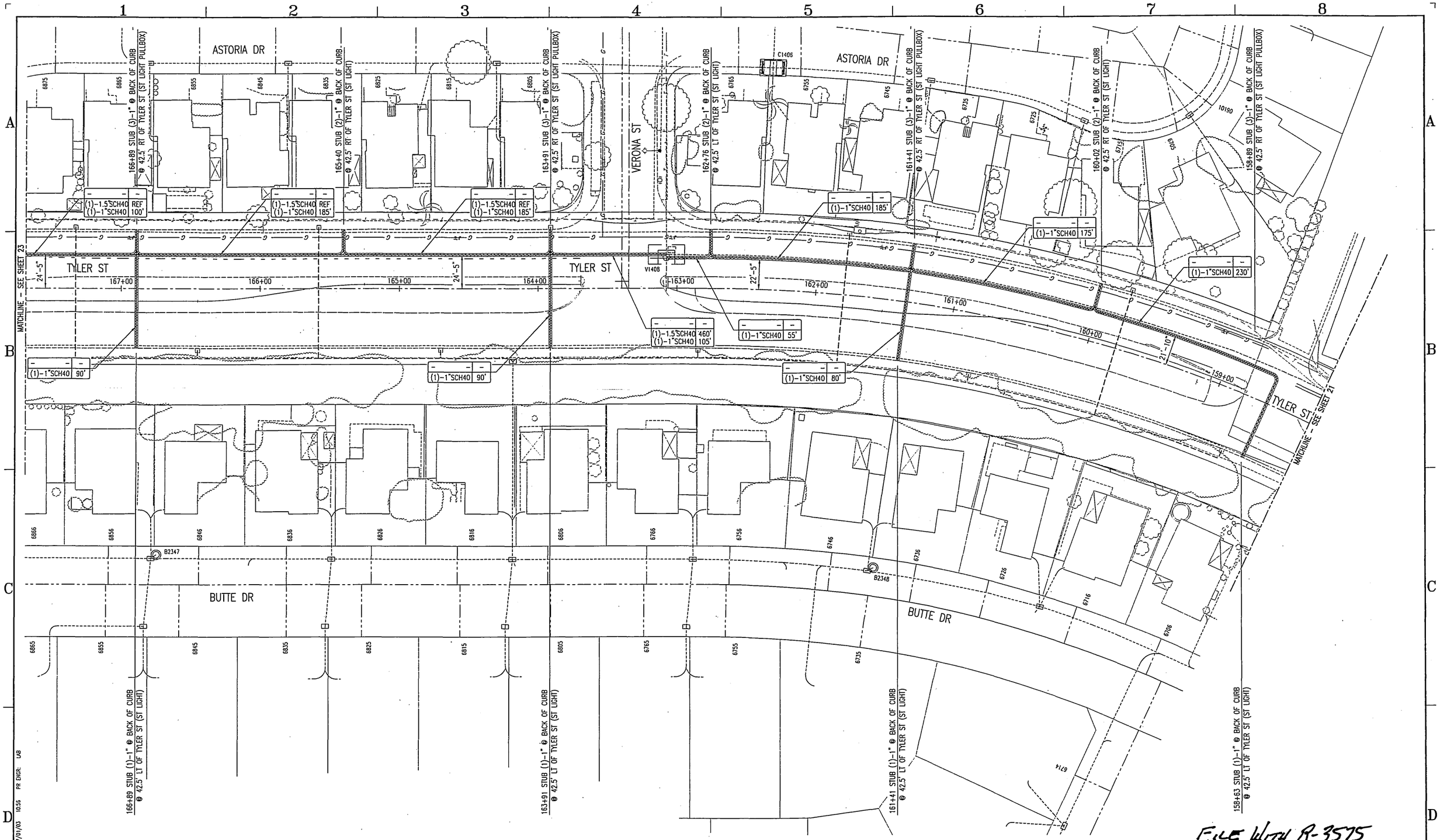

FILE WITH R-3575

48 HOURS BEFORE YOU DIG
CALL
UNDERGROUND SERVICE ALERT
1-800-227-2600

NORTH

SCALE: 1"=30'-0"

PRINTED 07/01/03 FOR
DATE

- ☐ PRELIMINARY
- ☐ DESIGN DEVELOPMENT
- ☒ BIDDING
- ☐ CONSTRUCTION
- ☐ APPROVAL
- ☐ AS BUILT
- ☐ REVISION

Intermountain Consumer Professional Engineers, Inc.
CONSULTING ENGINEERS
1145 E. SOUTH UNION AVE.
MIDVALE, UTAH 84047
BUS. (801) 255-1111 FAX. 566-0088

THE DRAWINGS, DESIGNS, IDEAS, ARRANGEMENTS AND PLANS INDICATED OR REPRESENTED ARE THE SOLE PROPERTY OF INTERMOUNTAIN CONSUMER PROFESSIONAL ENGINEERS, INC. (ICPE), AND ARE SUBJECT TO THE COPYRIGHT OF ICPE OR ITS ASSIGNS. THEY WERE CREATED, EVOLVED AND DEVELOPED EXCLUSIVELY FOR USE ON, AND IN CONJUNCTION WITH, THE SPECIFIED PROJECT. ANY USE OF THE DRAWINGS, DESIGNS, MATERIAL OR INFORMATION CONTAINED HEREIN, INCLUDING COPYING, WHICH IS NOT EXPRESSLY AUTHORIZED BY ICPE, IS STRICTLY PROHIBITED AS AN INFRINGEMENT OF ITS COPYRIGHT AND MAY RESULT IN LIABILITY. ©ICPE 1999

No.	DESCRIPTION	BY	DATE	APPD.
C	ISSUED FOR BID	KAC	07/01/03	LAB
B	CITY COMMENTS	KAC	05/06/02	LAB
A	INITIAL DESIGN	KAC	07/17/01	LAB

REVISIONS

[redacted]

TITLE
CITY OF RIVERSIDE
DEPARTMENT OF PUBLIC UTILITIES
TYLER ST. OVERHEAD TO UNDERGROUND CONVERSION
WELLS AVE. TO JURUPA AVE.

Drawn By: KAC	Date 05/04/01	ENGR. LAB	Date 04/12/01	DRAWING No. 0U5-604822	REVISION C
Chk'd. By: LAB	Date 05/04/01	APPD. AJT	Date 04/12/01		
Project No. 10-245	SCALE 1"=30'-0"	ACCT. NO. 613000-470619	SHEET 22 OF 42		

INDEXED 5-24-04 LH

10-245_SHT22.dwg jsch07/01/03 10:56 PR ENGR: LAB

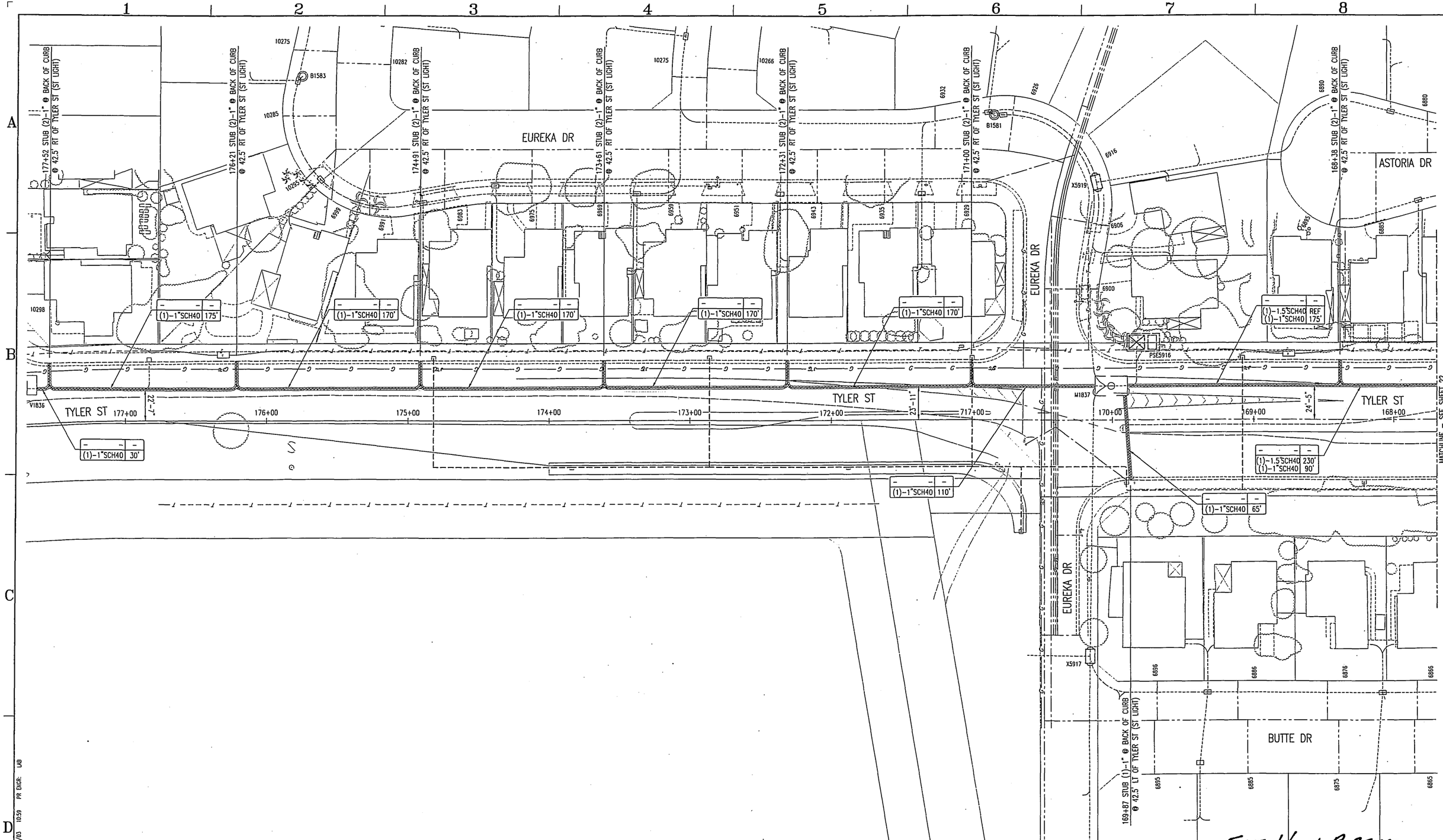

FILE WITH R-3575

48 HOURS BEFORE YOU DIG
CALL
UNDERGROUND SERVICE ALERT
1-800-227-2600

NORTH

0 5 10 15 30 60
SCALE: 1"=30'-0"

PRINTED 07/01/03 FOR DATE
- ☐ PRELIMINARY
- ☐ DESIGN DEVELOPMENT
- ☒ BIDDING
- ☐ CONSTRUCTION
- ☐ APPROVAL
- ☐ AS BUILT
- ☐ REVISION

Intermountain Consumer Professional Engineers, Inc.
CONSULTING ENGINEERS
1148 E. SOUTH UNION AVE
MIDVALE, UTAH 84047
BUS. (801) 255-1111 FAX. 566-0088

THE DRAWINGS, DESIGNS, IDEAS, ARRANGEMENTS AND PLANS INDICATED OR REPRESENTED ARE THE SOLE PROPERTY OF INTERMOUNTAIN CONSUMER PROFESSIONAL ENGINEERS, INC. (ICPE) AND ARE SUBJECT TO THE COPYRIGHT OF ICPE OR ITS ASSIGNS. THEY WERE CREATED, EVOLVED AND DEVELOPED EXCLUSIVELY FOR USE ON, AND IN CONNECTION WITH, THE SPECIFIED PROJECT. ANY USE OF THE DRAWINGS, DESIGNS, MATERIAL OR INFORMATION CONTAINED HEREIN, INCLUDING COPYING, WHICH IS NOT EXPRESSLY AUTHORIZED BY ICPE, IS STRICTLY PROHIBITED AS AN INFRINGEMENT OF ITS COPYRIGHT AND MAY PERMIT AN LIABILITY. ©ICPE 1999

No.	DESCRIPTION	BY	DATE	APPD.
C	ISSUED FOR BID	KAC	07/01/03	LAB
B	CITY COMMENTS	KAC	05/06/02	LAB
A	INITIAL DESIGN	KAC	07/17/01	LAB

REVISIONS

[redacted]

TITLE
CITY OF RIVERSIDE
DEPARTMENT OF PUBLIC UTILITIES
TYLER ST. OVERHEAD TO UNDERGROUND CONVERSION
FROM WELLS AVE. TO JURUPA AVE.

Drawn By:	KAC	Date	05/04/01	ENGR.	LAB	Date	04/12/01
Chk'd. By:	LAB	Date	05/04/01	APPD.	AJT	Date	04/12/01
Project No.	10-245	SCALE	1"=30'-0"	ACCT. NO.	613000-470619		

DRAWING No. 0U5-604822
REVISION C
SHEET 23 OF 42

INDEXED 5-29-04 KH

10-245_SHT23.dwg jsc:dg07/01/03 10:59 PR ENGR: LAB

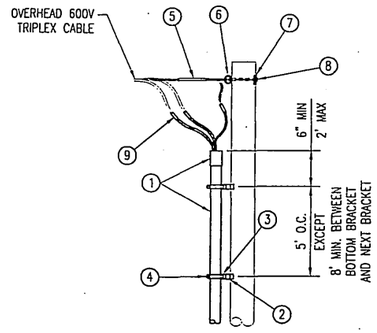

BILL OF MATERIAL			
ITEM	QUANTITY	DESCRIPTION	STOCK NO.
1	27'	3" SCHEDULE 80 RISER CONDUIT	2-1728
	3	COUPLING, 3" PVC	2-1836
2	6	STAND-OFF BRACKET	2-3948
3	6	8" CHANNEL	2-0846
4	6	CLAMP - PIPE, 3"	2-1476
5	1	DEAD END, OIC	2-2332
6	1	SINGLE SPOOL DEADEND EYENUT - 5/8"	2-2306
7	1	3"x3" SQUARE CURVED WASHER	2-6434
8	1	BOLT, MACHINE, 5/8"x8" OR 10"	2-3549 OR 2-3551
9	3	SLEEVE, SPLICING, FOR 4/0 OR 2/0	2-4539 OR 2-4538

SINGLE PHASE SECONDARY RISER (1 SHT39)
SCALE: NTS

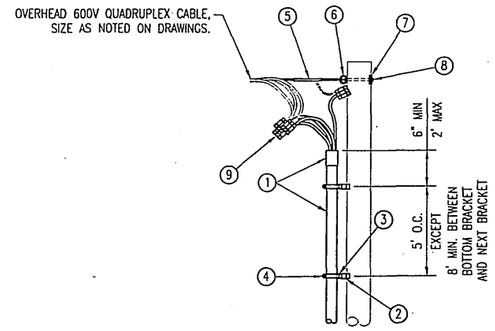

BILL OF MATERIAL			
ITEM	QUANTITY	DESCRIPTION	STOCK NO.
1	27'	3" SCHEDULE 80 RISER CONDUIT	2-1728
	1	COUPLING, 3" PVC	2-1836
2	6	STAND-OFF BRACKET	2-3948
3	6	8" CHANNEL	2-0846
4	6	CLAMP - PIPE, 3"	2-1476
5	1	DEAD END, OIC	2-2332
6	1	SINGLE SPOOL DEADEND EYENUT - 5/8"	2-2306
7	1	3"x3" SQUARE CURVED WASHER	2-6434
8	1	BOLT, MACHINE, 5/8"x8" OR 10"	2-3549 OR 2-3551
9	4	BUS, 3-WAY, SET-SCREW, 350	2-0715

THREE PHASE SECONDARY RISER (2 SHT39)
SCALE: NTS

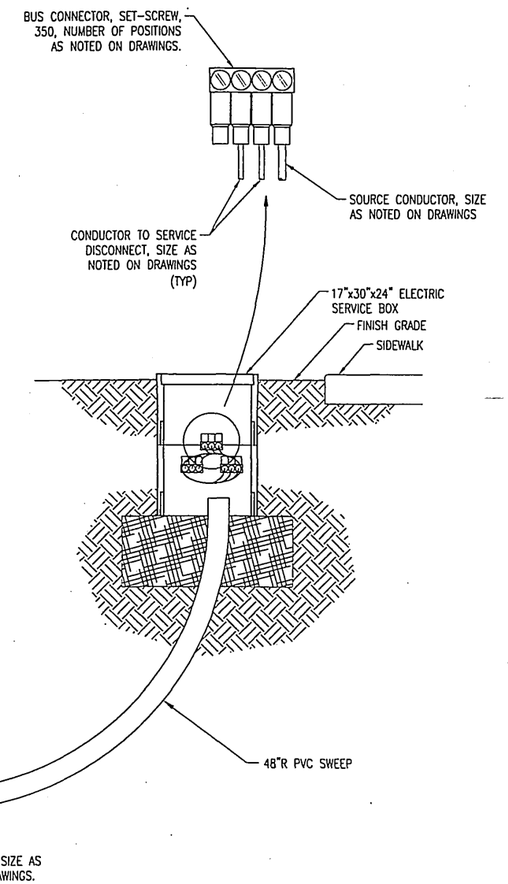

ELECTRIC SERVICE BOX CONNECTION (3 SHT39)
SCALE: NTS

5818 TYLER ST.

5968 TYLER ST.

5901 TYLER ST.

6024 TYLER ST.

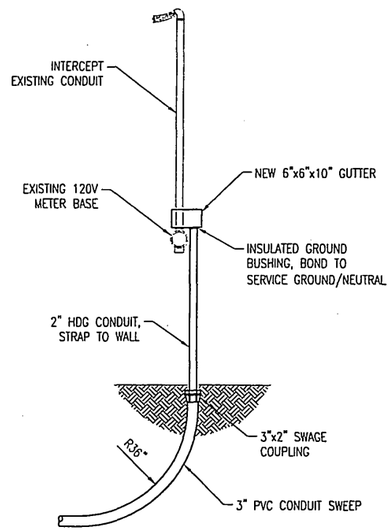

INTERCEPT EXISTING FEEDER INTO METER BASE (4 SHT39)
SCALE: NTS

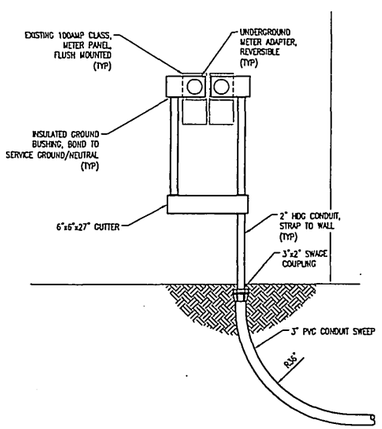

5185 TYLER ST.

5506 TYLER ST.

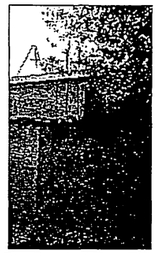
5215-5217 TYLER ST.

5250-5252 TYLER ST.

5254-5256 TYLER ST.

5342-5344 TYLER ST.

SIDE BY SIDE METER BASES (5 SHT39)
SCALE: NTS

FILE WITH R-3575

48 HOURS BEFORE YOU DIG
CALL
UNDERGROUND SERVICE ALERT
1-800-227-2600

PRINTED 07/01/03 FOR DATE
- ☐ PRELIMINARY
- ☐ DESIGN DEVELOPMENT
- ☒ BIDDING
- ☐ CONSTRUCTION
- ☐ APPROVAL
- ☐ AS BUILT
- ☐ REVISION

Intermountain Consumer Professional Engineers, Inc.
CONSULTING ENGINEERS
1145 E. ROSSON WAY
REDLANDS, CALIFORNIA 92373
BUS (951) 253-1111 FAX 566-0068

THE DRAWINGS, DESIGNS, IDEAS, ARRANGEMENTS AND PLANS INDICATED OR REPRESENTED ARE THE SOLE PROPERTY OF INTERMOUNTAIN CONSUMER PROFESSIONAL ENGINEERS, INC. (ICPE), AND ARE SUBJECT TO THE COPYRIGHT OF ICPE OR ITS ASSIGNS. THEY WERE CREATED, EVOLVED AND DEVELOPED EXCLUSIVELY FOR USE ON, AND IN CONJUNCTION WITH, THE SPECIFIED PROJECT. ANY USE OF THE DRAWINGS, DESIGNS, MATERIAL OR INFORMATION CONTAINED HEREIN, INCLUDING COPYING, WHICH IS NOT EXPRESSLY AUTHORIZED BY ICPE, IS STRICTLY PROHIBITED AS AN INFRINGEMENT OF ITS COPYRIGHT AND MAY RESULT IN LIABILITY. ©ICPE 1999

No.	DESCRIPTION	BY	DATE	APPD.
C	ISSUED FOR BID	KAC	07/01/03	LAB
B	CITY COMMENTS	KAC	05/06/02	LAB
A	INITIAL DESIGN	KAC	07/17/01	LAB

REVISIONS
[redacted]

TITLE
CITY OF RIVERSIDE
DEPARTMENT OF PUBLIC UTILITIES
TYLER ST. OVERHEAD TO UNDERGROUND CONVERSION
WELLS AVE. TO JURUPA AVE.

Drawn By:	KAC	Date	04/05/02	ENGR.	LAB	Date	04/12/01
Chk'd. By:	LAB	Date	04/05/02	APPD.	AJT	Date	04/12/01
Project No.	10-245	SCALE	AS NOTED	ACCT. NO.	613000 470619		

DRAWING No. OU5-604822 REVISION C
SHEET 39 OF 42

INDEXED 5-29-04

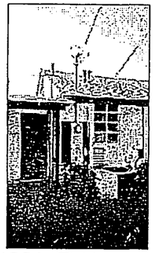
4889 TYLER ST.

4913 TYLER ST.

4932 TYLER ST.

4951 TYLER ST.

4954 TYLER ST.

5011 TYLER ST.

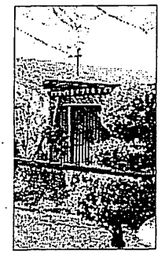
5150 TYLER ST.

5327 TYLER ST.

5333 TYLER ST.

5508 TYLER ST.

5548 TYLER ST.

5679 TYLER ST.

5680 TYLER ST.

5812 TYLER ST.

5828 TYLER ST.

5845 TYLER ST.

5859 TYLER ST.

5863 TYLER ST.

5871 TYLER ST.

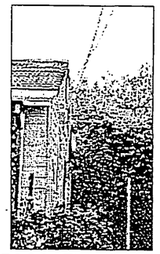
5920 TYLER ST.

5929 TYLER ST.

5947 TYLER ST.

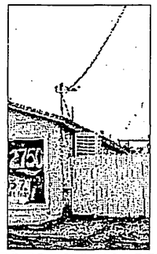
5970 TYLER ST.

5971 TYLER ST.

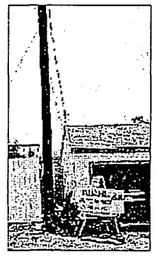
5980 TYLER ST.

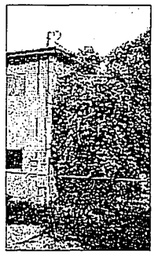
6158 TYLER ST.

6289 TYLER ST.

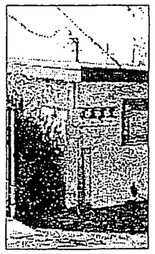
5132–5138 TYLER ST.

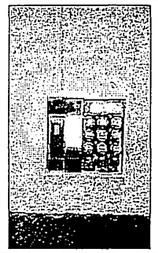
5220 TYLER ST.

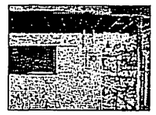
5925 TYLER ST.

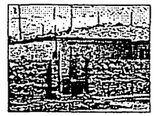
6005 TYLER ST.

5952–5954 TYLER ST.

5956–5958 TYLER ST.

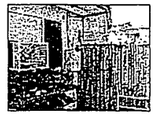
6120 TYLER ST.

6293 TYLER ST.

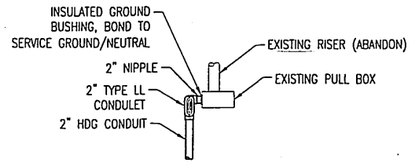

LL CONDULET INTO PULL BOX

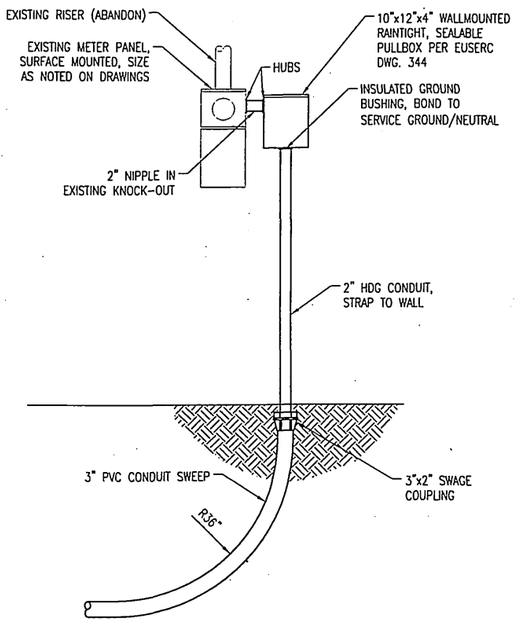

SURFACE MOUNTED PULL BOX NEXT TO METER BASE (6 SHT40)
SCALE: NTS

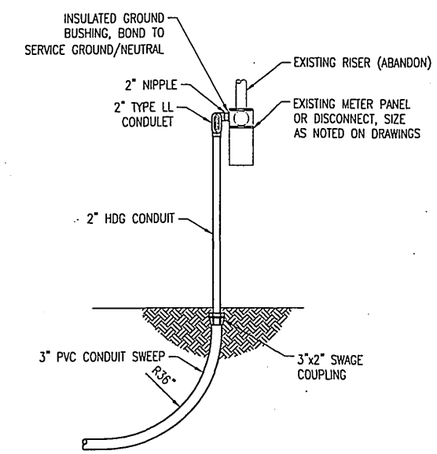

LL CONDULET INTO METER BASE OR DISCONNECT

FILE WITH R-3575

LL CONDULET INTO METER BASE OR PULL BOX (7 SHT40)
SCALE: NTS

48 HOURS BEFORE YOU DIG
CALL
UNDERGROUND SERVICE ALERT
1-800-227-2600

PRINTED 07/01/03 FOR DATE
- ☐ PRELIMINARY
- ☐ DESIGN DEVELOPMENT
- ☒ BIDDING
- ☐ CONSTRUCTION
- ☐ APPROVAL
- ☐ AS BUILT
- ☐ REVISION

Intermountain Consumer Professional Engineers, Inc.
CONSULTING ENGINEERS
3145 E. SOUTH UNION AVE.
MIDVALE, UTAH 84047
BUS. (801) 255-1111 FAX. 568-0068

THE DRAWINGS, DESIGNS, IDEAS, ARRANGEMENTS AND PLANS INDICATED OR REPRESENTED ARE THE SOLE PROPERTY OF INTERMOUNTAIN CONSUMER PROFESSIONAL ENGINEERS, INC. (ICPE), AND ARE SUBJECT TO THE COPYRIGHT OF ICPE OR ITS ASSIGNS. THEY WERE CREATED, EVOLVED AND DEVELOPED EXCLUSIVELY FOR USE ON, AND IN CONJUNCTION WITH, THE SPECIFIED PROJECT. ANY USE OF THE DRAWINGS, DESIGNS, MATERIAL OR INFORMATION CONTAINED HEREIN, INCLUDING COPYING, WHICH IS NOT EXPRESSLY AUTHORIZED BY ICPE, IS STRICTLY PROHIBITED AS AN INFRINGEMENT OF ITS COPYRIGHT AND MAY RESULT IN LIABILITY. ©ICPE 1995

No.	DESCRIPTION	BY	DATE	APPD.
C	ISSUED FOR BID	KAC	07/01/03	LAB
B	CITY COMMENTS	KAC	05/06/02	LAB
A	INITIAL DESIGN	KAC	07/17/01	LAB

REVISIONS

TITLE
CITY OF RIVERSIDE
DEPARTMENT OF PUBLIC UTILITIES
TYLER ST. OVERHEAD TO UNDERGROUND CONVERSION
WELLS AVE. TO JURUPA AVE.

Drawn By:	KAC	Date	04/05/02	ENGR.	LAB	Date	04/12/01
Chk'd. By:	LAB	Date	04/05/02	APPD.	AJT	Date	04/12/01
Project No.	10-245	SCALE	AS NOTED	ACCT. NO.	613000 470619	SHEET	40 OF 42

DRAWING No. 0U5-604822
REVISION C

INDEXED 5-24-84 JH

10-245_SHT40.dwg kc 09/29/03 07:49 PR ENGR: LAB

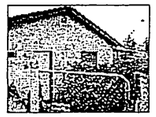

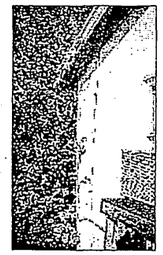

4940 TYLER ST. 4982 TYLER ST. 5041 TYLER ST. 5060 TYLER ST. 5080 TYLER ST. 5119 TYLER ST. 5201 TYLER ST. 5231 TYLER ST.

5240 TYLER ST. 5271 TYLER ST. 5272 TYLER ST. 5293 TYLER ST. 5294 TYLER ST. 5323 TYLER ST. 5330 TYLER ST.

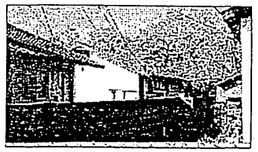

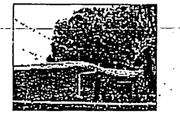
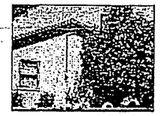

5346 & 5348 TYLER ST. 5360 TYLER ST. 5392 TYLER ST. 5414 TYLER ST.

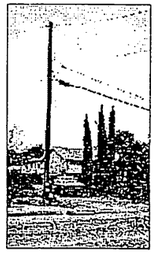

5440 TYLER ST. 5575 TYLER ST. 5585 TYLER ST. 5669 TYLER ST.

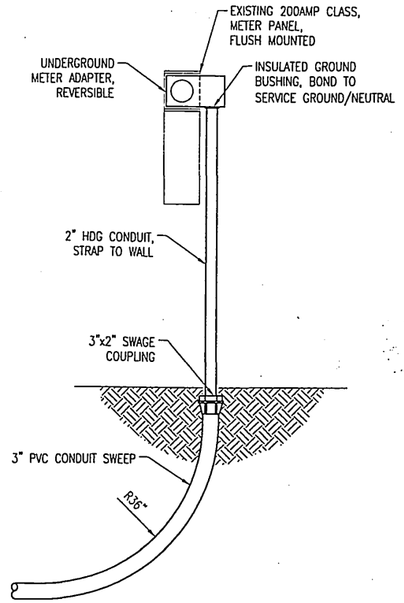

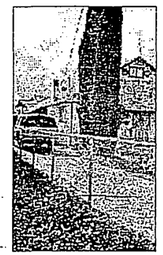
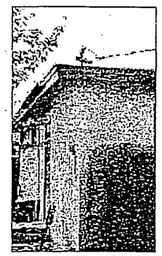
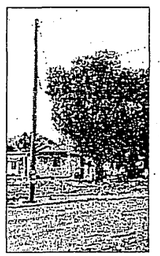
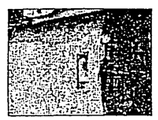

5716 TYLER ST. 5790 TYLER ST. 5868 TYLER ST. 5870 TYLER ST. 5912 TYLER ST. 5934 TYLER ST. 5945 TYLER ST.

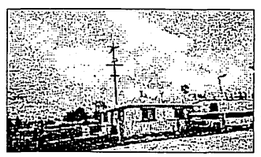

6050 TYLER ST. 6266 TYLER ST. 6454 TYLER ST. 10321 HEDRICK AVE.

METER EXTENSION ADAPTER FOR METER BASE (8 SHT41)
SCALE: NTS

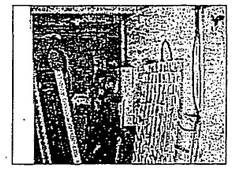

5929 TYLER ST. 5929 TYLER ST.

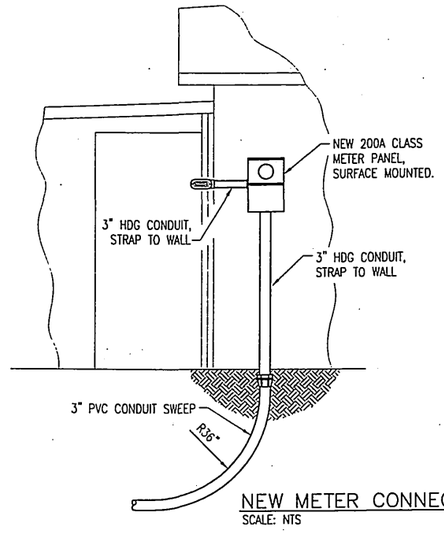

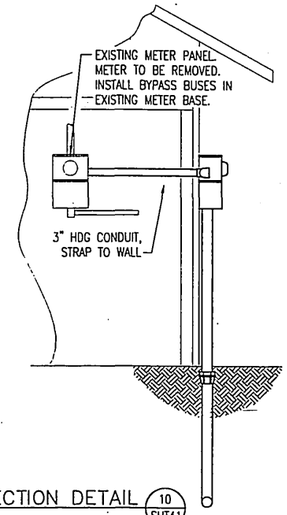

NEW METER CONNECTION DETAIL (10 SHT41)
SCALE: NTS

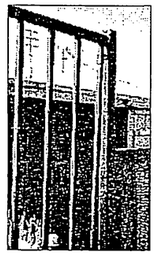

5191–5193 TYLER ST. 5940 TYLER ST.

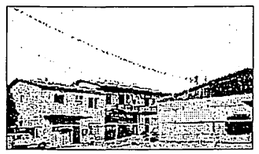

6168 TYLER ST.

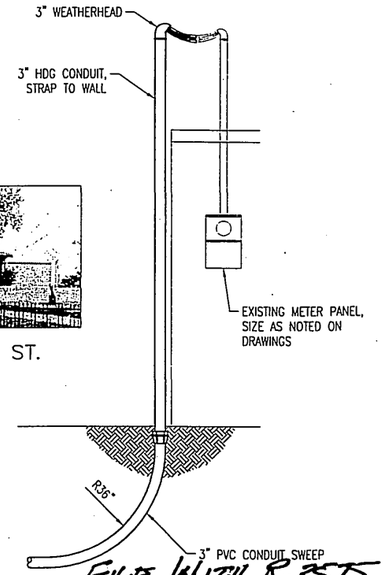

FILE WITH R-3575

WEATHERHEAD TO WEATHERHEAD CONVERSION (9 SHT41)
SCALE: NTS

48 HOURS BEFORE YOU DIG
CALL
UNDERGROUND SERVICE ALERT
1-800-227-2600

PRINTED 07/01/03 FOR DATE
- ☐ PRELIMINARY
- ☐ DESIGN DEVELOPMENT
- ☒ BIDDING
- ☐ CONSTRUCTION
- ☐ APPROVAL
- ☐ AS BUILT
- ☐ REVISION

Intermountain Consumer Professional Engineers, Inc.
CONSULTING ENGINEERS
1140 E. SOUTH UNION AVE.
MIDVALE, UTAH 84047
BUS. (801) 255-1111 FAX. 566-0060

THE DRAWINGS, DESIGNS, IDEAS, ARRANGEMENTS AND PLANS INDICATED OR REPRESENTED ARE THE SOLE PROPERTY OF INTERMOUNTAIN CONSUMER PROFESSIONAL ENGINEERS, INC. (ICPE), AND ARE SUBJECT TO THE COPYRIGHT OF ICPE OR ITS ASSIGNS. THEY WERE CREATED, EVOLVED AND DEVELOPED EXCLUSIVELY FOR USE ON AND IN CONNECTION WITH THE SPECIFIED PROJECT. ANY USE OF THE DRAWINGS, DESIGNS, MATERIAL OR INFORMATION CONTAINED HEREON, INCLUDING COPYING, WHICH IS NOT EXPRESSLY AUTHORIZED BY ICPE, IS STRICTLY PROHIBITED AS AN INFRINGEMENT OF ITS COPYRIGHT AND MAY RESULT IN LIABILITY. ©ICPE 1999

No.	DESCRIPTION	BY	DATE	APPD.
C	ISSUED FOR BID	KAC	07/01/03	LAB
B	CITY COMMENTS	KAC	05/06/02	LAB
A	INITIAL DESIGN	KAC	07/17/01	LAB

REVISIONS

TITLE
CITY OF RIVERSIDE
DEPARTMENT OF PUBLIC UTILITIES
TYLER ST. OVERHEAD TO UNDERGROUND CONVERSION
WELLS AVE. TO JURUPA AVE.

Drawn By:	KAC	Date	04/05/02	ENGR.	LAB	Date	04/12/01
Chk'd. By:	LAB	Date	04/05/02	APPD.	AJT	Date	04/12/01
Project No.	10-245	SCALE	AS NOTED	ACCT. NO.	613000 470619	SHEET	41 OF 42

DRAWING No. 0U5-604822
REVISION C

10-245_SHT41.dwg jschd07/03/03 13:37 PR ENGR: LAB

INDEXED 5-26-04 4th

NORTH

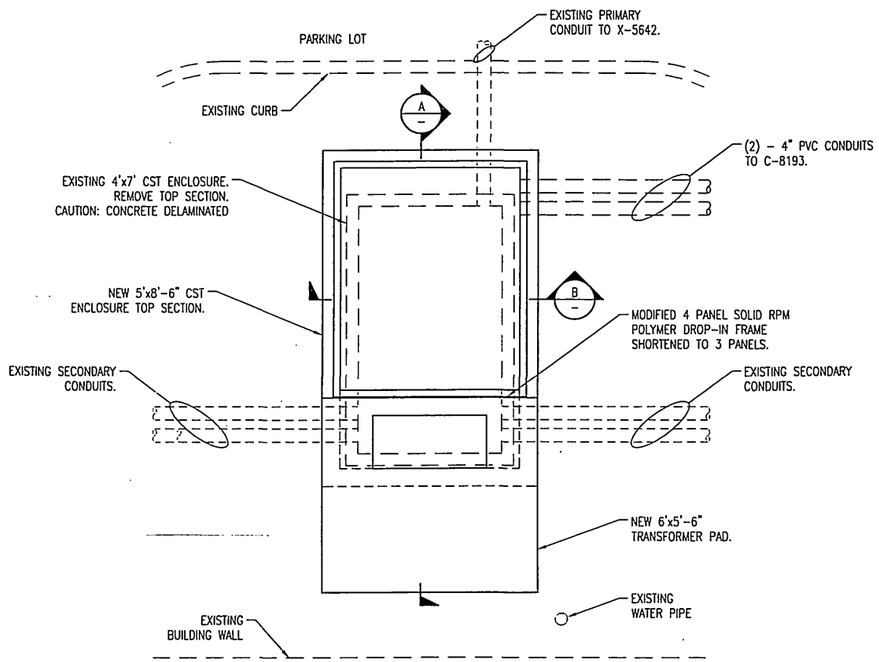

PLAN – C-2424 (11)
SCALE: 1"=2'-0" SHT 42

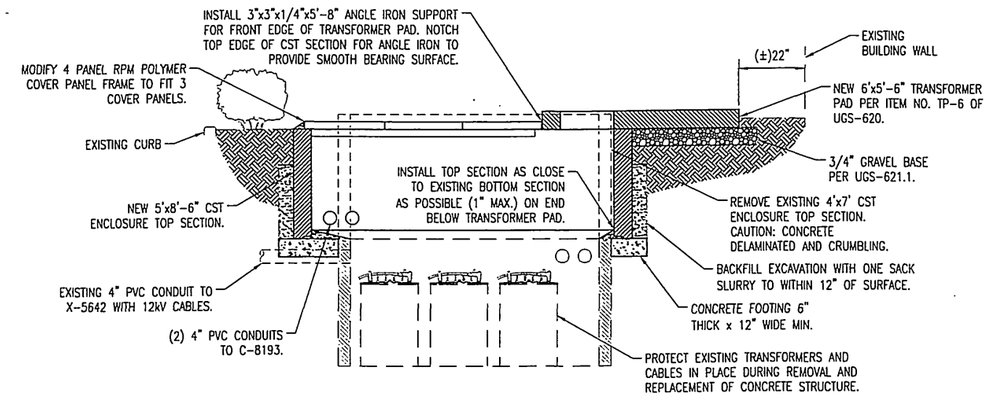

SECTION (A)
SCALE: 1"=2'-0"

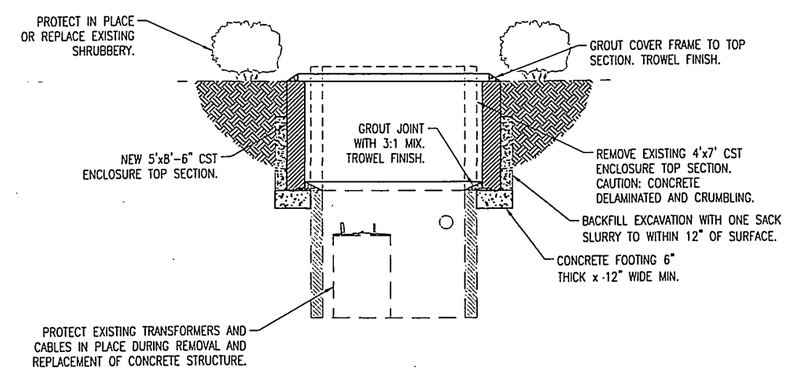

SECTION (B)
SCALE: 1"=2'-0"

FILE WITH R-3575

PRINTED 07/01/03 FOR
DATE

- ☐ PRELIMINARY
- ☐ DESIGN DEVELOPMENT
- ☒ BIDDING
- ☐ CONSTRUCTION
- ☐ APPROVAL
- ☐ AS BUILT
- ☐ REVISION

Intermountain Consumer Professional Engineers, Inc.
CONSULTING ENGINEERS
1145 E. SOUTH UNION AVE.
MIDVALE, UTAH 84047
BUS. (801) 255-1111 FAX 566-0068

THE DRAWINGS, DESIGNS, IDEAS, ARRANGEMENTS AND PLANS INDICATED OR REPRESENTED ARE THE SOLE PROPERTY OF INTERMOUNTAIN CONSUMER PROFESSIONAL ENGINEERS, INC. (ICPE), AND ARE SUBJECT TO THE COPYRIGHT OF ICPE OR ITS ASSIGNS. THEY WERE CREATED, EVOLVED AND DEVELOPED EXCLUSIVELY FOR USE ON, AND IN CONNECTION WITH, THE SPECIFIED PROJECT. ANY USE OF THE DRAWINGS, DESIGNS, MATERIAL OR INFORMATION CONTAINED HEREIN, INCLUDING COPYING, WHICH IS NOT EXPRESSLY AUTHORIZED BY ICPE, IS STRICTLY PROHIBITED AS AN INFRINGEMENT OF ITS COPYRIGHT AND MAY RESULT IN LIABILITY. ICPE 1999

No.	DESCRIPTION	BY	DATE	APPD.
C	ISSUED FOR BID	KAC	07/01/03	LAB
B	CITY COMMENTS	KAC	05/06/02	LAB
A	INITIAL DESIGN	KAC	07/17/01	LAB

REVISIONS

[redacted]

TITLE
CITY OF RIVERSIDE
DEPARTMENT OF PUBLIC UTILITIES
TYLER ST. OVERHEAD TO UNDERGROUND CONVERSION
WELLS AVE. TO JURUPA AVE.

Drawn By:	KAC	Date	05/04/01	ENGR.	LAB	Date	04/12/01
Chk'd. By:	LAB	Date	05/04/01	APPD.	AJT	Date	04/12/01
Project No.	10-245	SCALE	NTS				

DRAWING No. 0U5-604822
REVISION C
SHEET 42 OF 42

INDEXED 5-24-04 [illegible]

10-245_SHT42.dwg kc 08/29/03 07:50 PR ENGR: LAB