RIVERSIDE CALIFORNIA

CITY OF RIVERSIDE — INCORPORATED 1883

PUBLIC WORKS DEPARTMENT

PRIMROSE DRIVE WIDENING

FROM HARRISON STREET TO ROOSEVELT STREET

GENERAL CONSTRUCTION NOTES:

1. CONSTRUCTION SHALL BE IN ACCORDANCE WITH THE CITY OF RIVERSIDE STANDARD DRAWINGS AND STANDARD SPECIFICATIONS FOR PUBLIC WORKS CONSTRUCTION, 1997 EDITION.
2. CONFLICTING UTILITIES IN THE CONSTRUCTION AREA SHALL BE RELOCATED BY OTHERS PRIOR TO CONSTRUCTION.
3. EXISTING UTILITIES SHOWN ON THE PLANS, ARE PLOTTED FROM UTILITY RECORDS. THE CONTRACTOR IS REQUIRED TO TAKE DUE PRECAUTIONARY MEASURES TO LOCATE AND PROTECT ALL UTILITIES WHETHER OR NOT SHOWN ON THESE PLANS.

CONSTRUCTION LEGEND:

- NUMBERS ABOVE 100 IN A HEXAGON ON THE PLAN REFER TO THE RESPECTIVE STANDARD DRAWING AND SHALL BE CONSTRUCTED ACCORDINGLY, UNLESS MODIFICATIONS ARE NOTED ON THE PLAN. ANY NUMBER SHOWN BELOW THE STANDARD DRAWING NUMBER INDICATES THE SPECIFIC ALTERNATE TO BE CONSTRUCTED.
- C/S — CONSTRUCT STRUCTUAL SECTION OF 0.21' AC OVER 0.70' CAB.
- OL — OVERLAY EXISTING PAVEMENT WITH VARIABLE THICKNESS AC (0.10' MIN. & ~~0.60'~~ 0.28' MAX.). (1)
- G.V. — ADJUST GATE VALVE COVER TO GRADE.
- E — PUD ELECTRIC DIV. TO RELOCATE PRIOR TO CONSTRUCTION.
- W — PUD WATER DIV. TO RELOCATE/EXTEND.
- T/I — TRANSPLANT PALM TREE AS SHOWN ON THE PLANS & AS SPECIFIED IN THE SPECIAL PROVISIONS (CLASSES ARE THE SAME AS TREE REMOVAL CLASSES).
- R/I — REMOVE TREE AS SHOWN ON THE PLANS.
- P — PLANT A 24" BOX SIZE PINK TRUMPET TREE (TABEBUIA IPE). EXACT LOCATION WILL BE DETERMINED IN THE FIELD DURING CONSTRUCTION. (TO BE PLANTED BY PARK & RECREATION DEPT.).
- ADJ. — ADJUST SEWER MANHOLE COVER TO GRADE.
- G1 — WHERE THE PAVEMENT OVERLAY IS ADJACENT TO THE GUTTER LIP, COLD MILL THE EXISTING PAVEMENT TO THE DEPTH OF 0.08' BELOW THE GUTTER LIP AND DAYLIGHT TO MEET THE EXISTING PAVEMENT IN 5'. WHERE THE PAVEMENT OVERLAY IS TO MEET THE EXISTING PAVEMENT AT THE JOIN LINE, COLD MILL THE EXISTING PAVEMENT TO A DEPTH OF 0.08' BELOW THE JOIN LINE AND DAYLIGHT TO MEET THE EXISTING PAVEMENT IN A DISTANCE OF 10' FROM THE JOIN LINE.

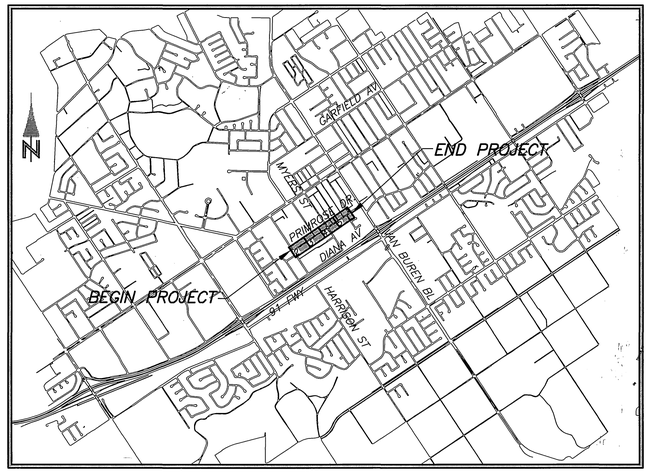

PROJECT LOCATION MAP

0 KM. 0.5 KM. 1 KM 1.5 KM.
0′ 500′ 1000′ 2000′ 3000′ 4000′ 5000′ 6000′

SCALE: 1"=1,000'

EXISTING UNDERGROUND UTILITIES:

- SANITARY SEWER — 8"S
- WATER LINE — 6"W
- STORM DRAIN — 24"SD
- GAS LINE — 3"G
- ABANDONDED UTILITY — 6"G(ABAN'D.)
- TELEPHONE CONDUIT — T T
- ELECTRICAL CONDUIT — E E
- ELECTROLIER LIGHTING CONDUIT — ELC
- TRAFFIC SIGNAL — SIG SIG
- FIRE ALARM — F F

EXISTING TOPOGRAPHY:

- BLOCK WALL
- BOARD FENCE
- WIRE FENCE
- CHAIN LINK FENCE
- TOP OF SLOPE
- TOE OF SLOPE
- DIRECTION OF FLOW
- SANITARY SEWER M.H.
- SANITARY SEWER CLEANOUT
- STORM DRAIN M.H.
- IRRIGATION WEIR
- WATER M.H.
- GAS M.H.
- ELECTRIC M.H.
- TELEPHONE M.H.
- WATER METER
- FIRE HYDRANT
- SPRINKLER HEAD
- VALVE
- AIR VALVE
- AIR VENT
- BUS STOP SIGN
- BLOW-OFF VALVE
- IRRIGATION STAND PIPE
- POLE & GUY ANCHOR
- POWER POLE
- TELEPHONE POLE
- TELEPHONE RISER
- JOINT USE POLE
- PULL BOX
- TRAFFIC SIGN
- PARKING METER
- FIRE ALARM BOX
- STREET NAME SIGN
- GAS METER
- MAIL BOX
- FAUCET
- WALK-DON'T WALK PEDESTRIAN SIGNAL
- ELECTRICAL TEST STATION
- WHEEL STOP
- A.C. BERM
- PEDESTRIAN PUSH BUTTON
- RAILROAD TRACKS
- RAILROAD SIGN
- RAILROAD SIGNAL
- TRAFFIC SIGNAL
- TRAFFIC SIGNAL ON MAST ARM
- TRAFFIC SIGNAL CONTROLLER
- TRAFFIC SIGNAL LOOP DETECTOR
- STREET LIGHT & TRAFFIC SIGNAL ON MAST ARM
- STREET LIGHT (UPRIGHT)
- STREET LIGHT ON MAST ARM
- STEEL POST
- WOOD POST
- CONCRETE
- ASPHALT
- BUILDING
- EDGE OF PAVEMENT

CONSTRUCTION NOTES:

1. CONSTRUCT DRIVEWAY WITH 4" THICK AC OVER COMPACTED NATIVE MATERIAL AS SHOWN ON THE PLAN.
2. CONSTRUCT DRIVEWAY WITH 2.5" THICK CRUSHED AGGREGATE BASE OVER COMPACTED NATIVE MATERIAL.
3. CONSTRUCT COMPACTED EARTH DRIVEWAY TO MATCH EXISTING.
4. RELOCATE CHAIN LINK FENCE TO BACK OF PROPOSED SIDEWALK AS SHOWN ON THE PLAN.
5. (1) CONSTRUCT 6" P.C.C. AT DRIVEWAY APPROACH.

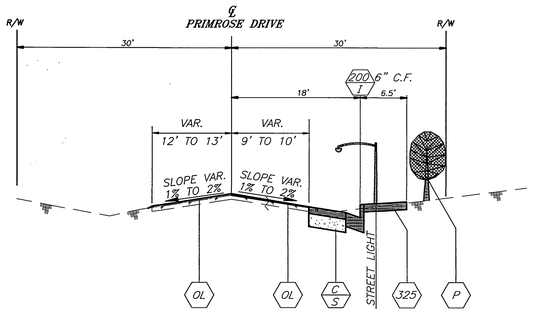

LT. SIDE
STA. 2+20 TO 11+30

RT. SIDE
STA. 2+20 TO 13+54

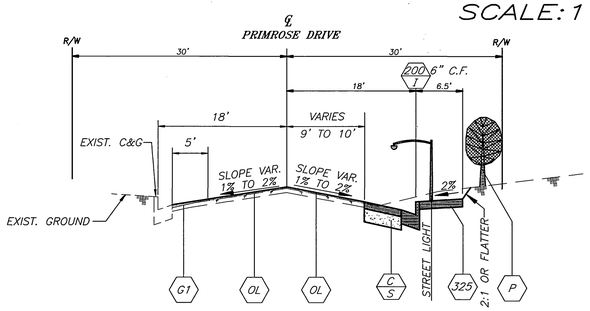

STA. 11+30 TO 13+54

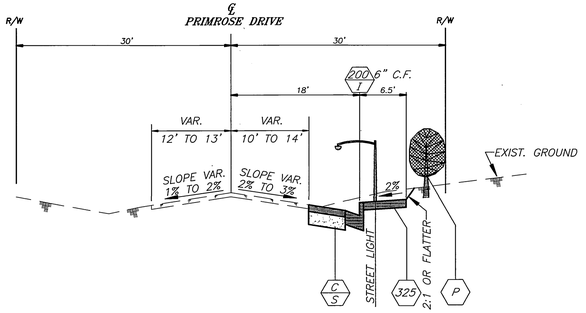

STA. 16+91 TO 18+70

TYPICAL SECTIONS

N.T.S.

*AS-BUILT PER PLANS 5-21-03 FH

REGISTERED PROFESSIONAL ENGINEER — MICHAEL KATUSIAN — No. 36686 — Exp. 6-30-04 — CIVIL — STATE OF CALIFORNIA

ENGINEER IN RESPONSIBLE CHARGE
MICHAEL KATUSIAN
R.C.E. No. 36686 expires 6/30/04
DATE 2/6/01

MARK	REVISIONS	APPR.	DATE
1	Added note 5 & revised max. overlay	MK	5/16/01

DESIGNED BY CSS DRAWN BY LFH CHECKED BY

CITY OF RIVERSIDE, CALIFORNIA
PUBLIC WORKS DEPARTMENT

	BY	DATE
APPROVED BY		
DEPUTY PW DIRECTOR/ENG.		2/6/01
PRINCIPAL ENGINEER		4/16/01
TRAFFIC DIVISION		4/16/01
SURVEYOR		2/6/01
STREET SERVICES		2/9/01
INSPECTION		4/4/01
PARK & REC. DEPT.		4/4/01

APPROVED BY
A. McGrath
PUBLIC WORKS DIRECTOR
DATE 2-23-2001

PRIMROSE DRIVE WIDENING
FROM HARRISON STREET TO ROOSEVELT STREET

HORIZ. SCALE: VERT. SCALE:

ACCT. NO. 9213700611-440120XX

R-3581

SHEET 1 OF 5

FILE NO.

INDEXED 9-18-01 FH

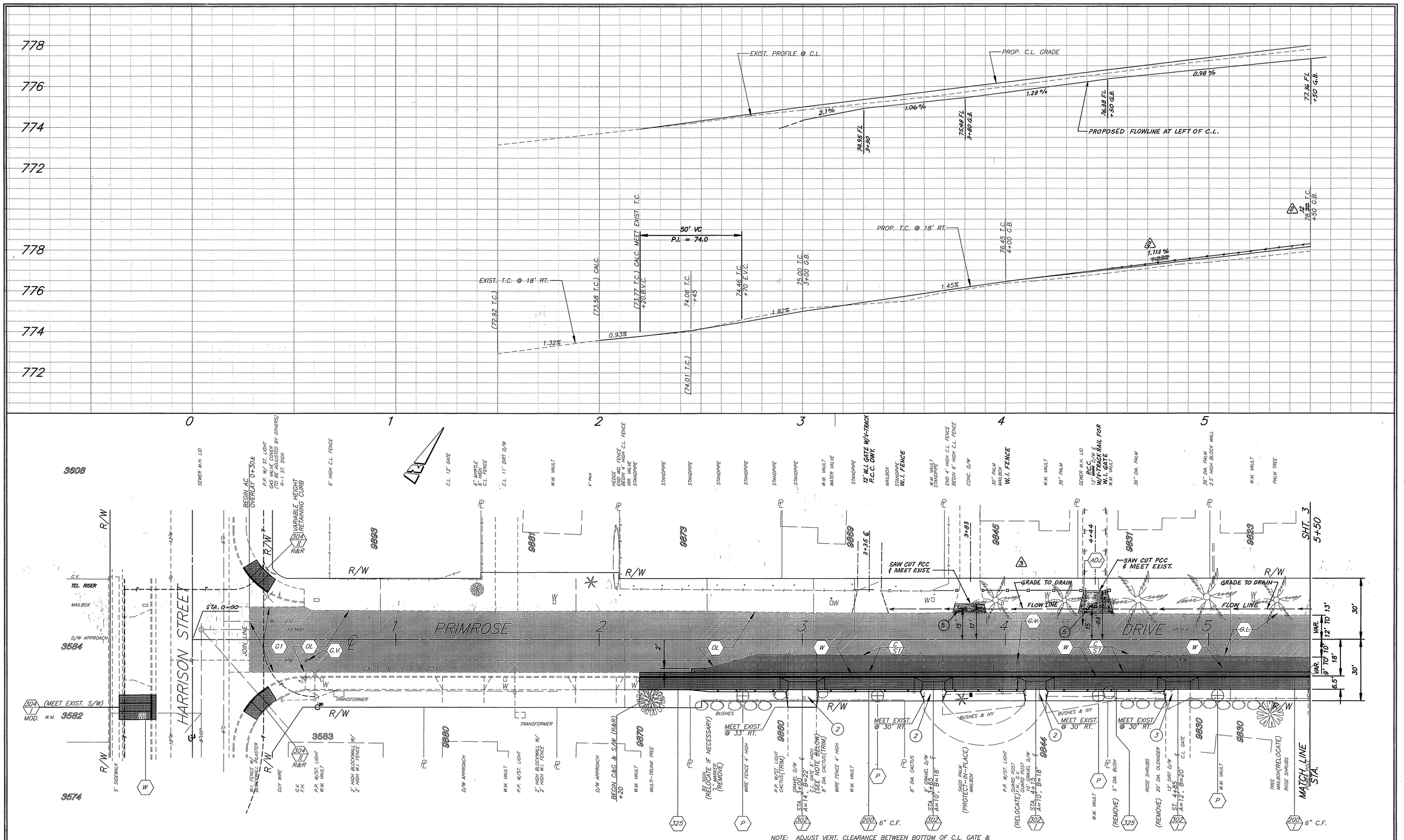

NOTE: ADJUST VERT. CLEARANCE BETWEEN BOTTOM OF C.L. GATE & FINISHED GRADE. REPLACE 3/4"± DIA. PIPE SLEEVE ENCASED W/9" DIA. x 9" DEEP PCC TO ANCHOR C.L. GATE BOLT.

* AS-BUILT PER PLANS 5-21-03 GH

ENGINEER IN RESPONSIBLE CHARGE

Michael Katusian

MICHAEL KATUSIAN
R.C.E. No. 36686 expires 6/30/04

DATE 2/6/01

REGISTERED PROFESSIONAL ENGINEER
MICHAEL KATUSIAN
No. 36686
Exp. 6-30-04
CIVIL
STATE OF CALIFORNIA

MARK	REVISIONS	APPR.	DATE
	of Primrose Dr.		
2	Added Dwy. Approaches @ N'LY Side	MK	5/15/01
1	Revised T.C. Grade	MK	5/15/01

DESIGNED BY: CSS DRAWN BY: LFH CHECKED BY:

CITY OF RIVERSIDE, CALIFORNIA
PUBLIC WORKS DEPARTMENT

APPROVED BY	BY	DATE
DEPUTY P.W. DIRECTOR/ENGR.		
PRINCIPAL ENGINEER		
TRAFFIC DIVISION		
PARKS DEPARTMENT		
INSPECTION		
SURVEYOR		

APPROVED BY:
R. McGrath
PUBLIC WORKS DIRECTOR
DATE: 2-23-2001

PRIMROSE DRIVE WIDENING

FROM HARRISON STREET TO ROOSEVELT STREET

HORIZ. SCALE: 1" = 20' VERT. SCALE: 1" = 2'

ACCT. NO. 9213700611-440120XX

R-3581

SHEET 2 OF 5

FILE NO.

INDEXED 9-18-01 GH

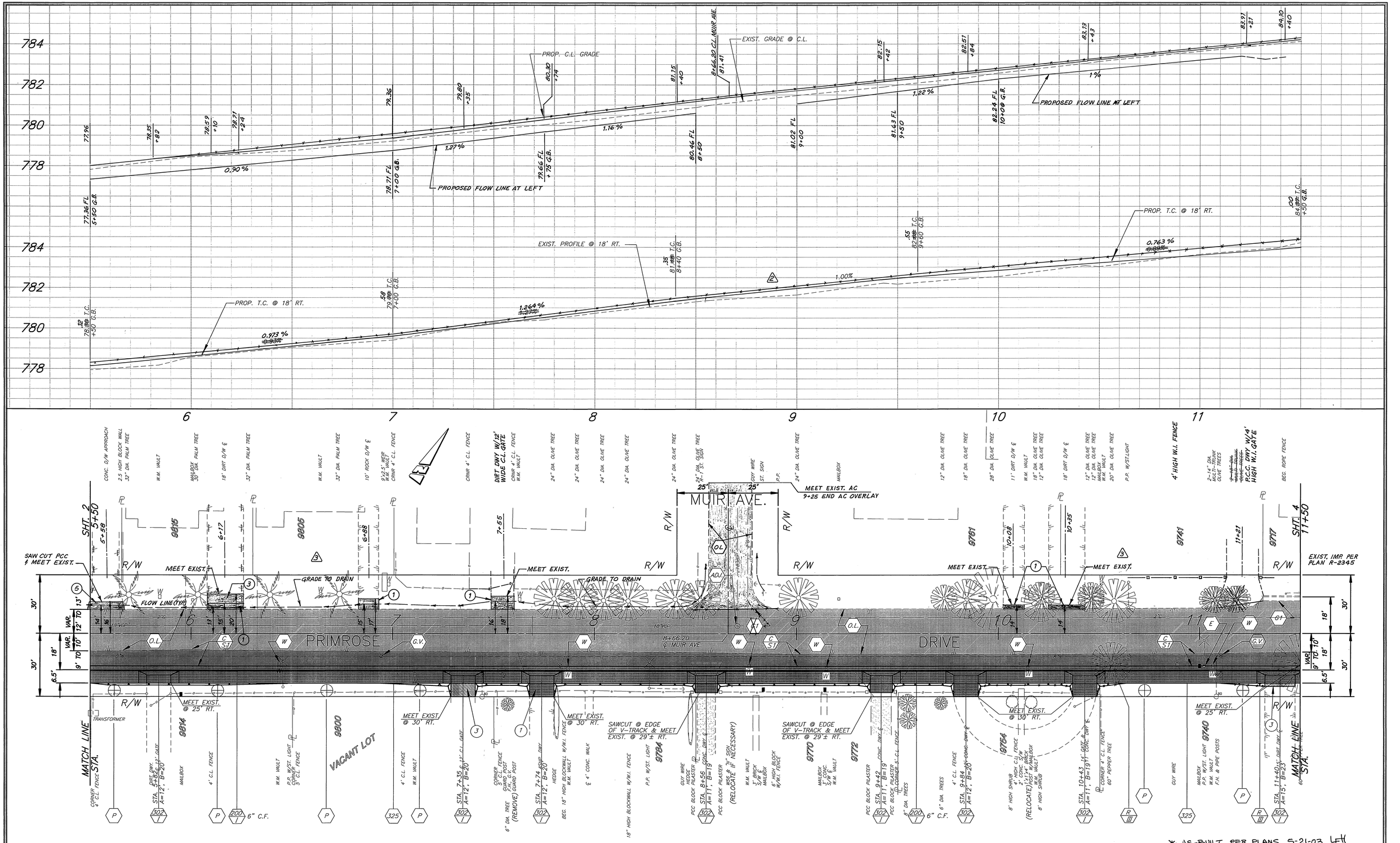

ENGINEER IN RESPONSIBLE CHARGE

MICHAEL KATUSIAN
R.C.E. No. 36686 expires 6/30/04
DATE 2/6/01

REGISTERED PROFESSIONAL ENGINEER
MICHAEL KATUSIAN
No. 36686
Exp. 6-30-04
CIVIL
STATE OF CALIFORNIA

of Primrose Drive

MARK	REVISIONS	APPR.	DATE
3	Added Dwy. Approaches @ N'Ly Side	MK	5/15/01
2	Revised T.C. Grade	MK	5/15/01

DESIGNED BY: CSS DRAWN BY: LFH CHECKED BY:

CITY OF RIVERSIDE, CALIFORNIA
PUBLIC WORKS DEPARTMENT

APPROVED BY	BY	DATE
DEPUTY PW DIRECTOR/ENG.	DTR	5/16/01
PRINCIPAL ENGINEER	JC	5/16/01
TRAFFIC DIVISION	S	5/16/01
PARKS DEPARTMENT		5/16/01
INSPECTION		5/16/01
SURVEYOR	MATS	5/16/01

APPROVED BY: R. McBratt
PUBLIC WORKS DIRECTOR
DATE: 2-23-2001

PRIMROSE DRIVE WIDENING

FROM HARRISON STREET TO ROOSEVELT STREET

HORIZ. SCALE: 1" = 20' VERT. SCALE: 1" = 2'

ACCT. NO. 9213700611-440120XX

R-3581

SHEET 3 OF 5

FILE NO.

INDEXED 9-18-01 LFH

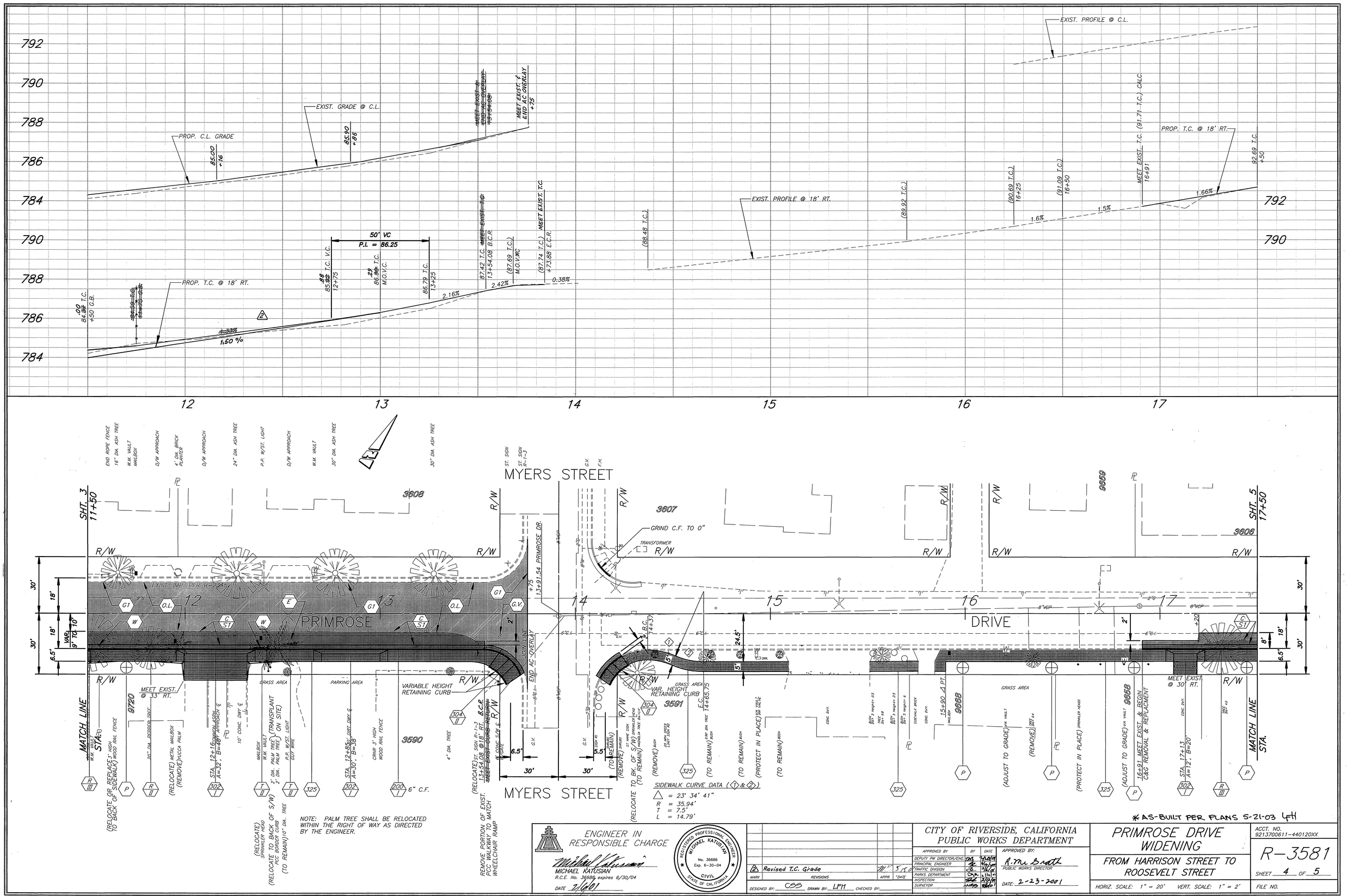

* AS-BUILT PER PLANS 5-21-03 LFH

ENGINEER IN RESPONSIBLE CHARGE
MICHAEL KATUSIAN
R.C.E. No. 36686 expires 6/30/04
DATE 2/16/01

REGISTERED PROFESSIONAL ENGINEER MICHAEL KATUSIAN No. 36686 Exp. 6-30-04 CIVIL STATE OF CALIFORNIA

MARK	REVISIONS	APPR.	DATE
2	Revised T.C. Grade		5/15/01

DESIGNED BY: CSS DRAWN BY: LFH CHECKED BY:

CITY OF RIVERSIDE, CALIFORNIA
PUBLIC WORKS DEPARTMENT

APPROVED BY	BY	DATE
DEPUTY PW DIRECTOR/ENG.		4/2/01
PRINCIPAL ENGINEER		4/2/01
TRAFFIC DIVISION		3/6/01
PARKS DEPARTMENT		3/16/01
INSPECTION		3/19/01
SURVEYOR		3/16/01

APPROVED BY: R. McGrath PUBLIC WORKS DIRECTOR
DATE: 2-23-2001

PRIMROSE DRIVE WIDENING
FROM HARRISON STREET TO ROOSEVELT STREET

ACCT. NO. 92137006 11-440120XX
R-3581
SHEET 4 OF 5
HORIZ. SCALE: 1" = 20' VERT. SCALE: 1" = 2'
FILE NO.

INDEXED 9-18-01 LFH

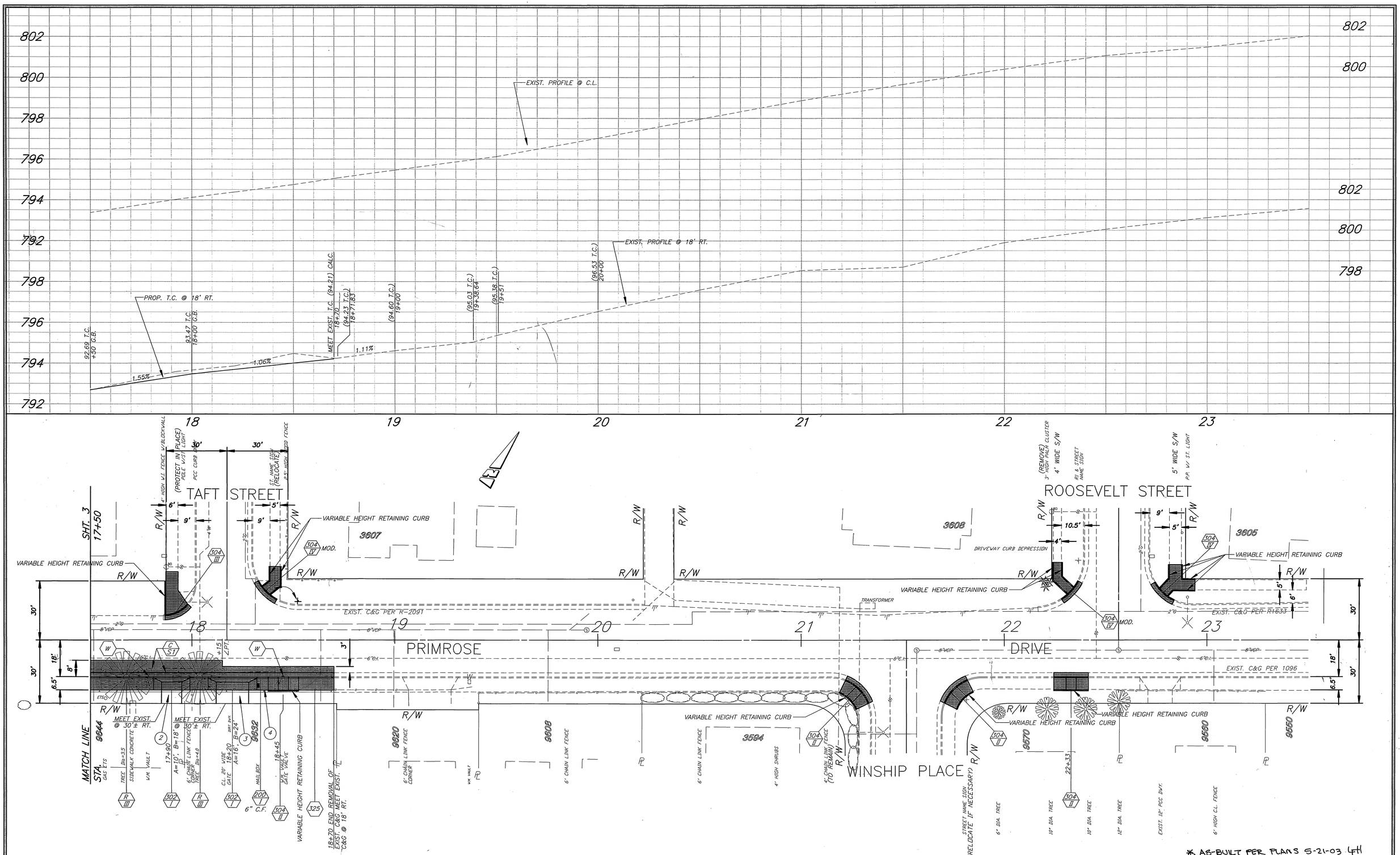

* AS-BUILT PER PLANS 5-21-03 LFH

CONSTRUCTION NOTE:

(4) RELOCATE CHAIN LINK FENCE TO BACK OF PROPOSED SIDEWALK AS SHOWN ON THE PLAN.

ENGINEER IN RESPONSIBLE CHARGE

MICHAEL KATUSIAN
R.C.E. No. 36686 expires 6/30/04
DATE 2/6/01

REGISTERED PROFESSIONAL ENGINEER MICHAEL KATUSIAN No. 36686 Exp. 6-30-04 CIVIL STATE OF CALIFORNIA

MARK	REVISIONS	APPR.	DATE

DESIGNED BY: CSS DRAWN BY: LFH CHECKED BY:

CITY OF RIVERSIDE, CALIFORNIA
PUBLIC WORKS DEPARTMENT

APPROVED BY	BY	DATE
DEPUTY PW DIRECTOR/ENG.	DMS	2/20/01
PRINCIPAL ENGINEER	[illegible]	2/16/2001
TRAFFIC DIVISION	[illegible]	2/6/01
PARKS DEPARTMENT	[illegible]	2/11/01
INSPECTION	[illegible]	2/12/01
SURVEYOR	[illegible]	2/6/01

APPROVED BY: R. McGrath
PUBLIC WORKS DIRECTOR
DATE: 2-23-2001

PRIMROSE DRIVE WIDENING

FROM HARRISON STREET TO ROOSEVELT STREET

HORIZ. SCALE: 1" = 20' VERT. SCALE: 1" = 2'

ACCT. NO. 9213700611-440120XX

R-3581

SHEET 5 OF 5

FILE NO.

INDEXED 9-18-01 LFH