Landscape Construction Documents for :

SHEFFIELD HOMES

City of Riverside, Ca.

T r a c t 28828 ~ Public Works Submittal ~

CIVIL ENGINEER:

CANTY ENGINEERING GROUP, INC.
2020 IOWA AVENUE, SUITE 1002
RIVERSIDE, CA 92507
909-683-5234
CONTACT: TECK C. LOH

DEVELOPER:

SHEFFIELD HOMES
3400 CENTRAL AVENUE,SUITE 325
RIVERSIDE, CALIFORNIA 92506

LANDSCAPE ARCHITECT:

David Neault Associates, Inc.

DAVID NEAULT ASSOCIATES, INC.
41877 ENTERPRISE CIRCLE NORTH SUITE 200
TEMECULA, CALIFORNIA 92590
(909) 296-3430
CONTACT: David Neault

PROJECT VICINITY:

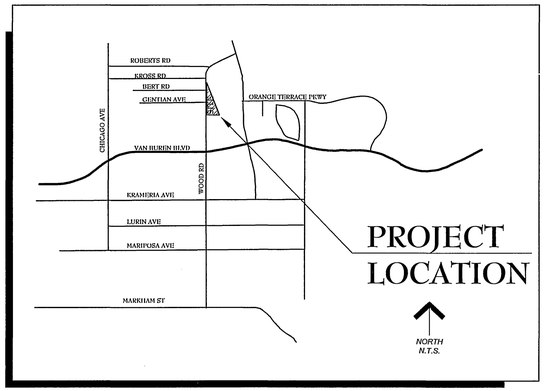

KEY MAP:

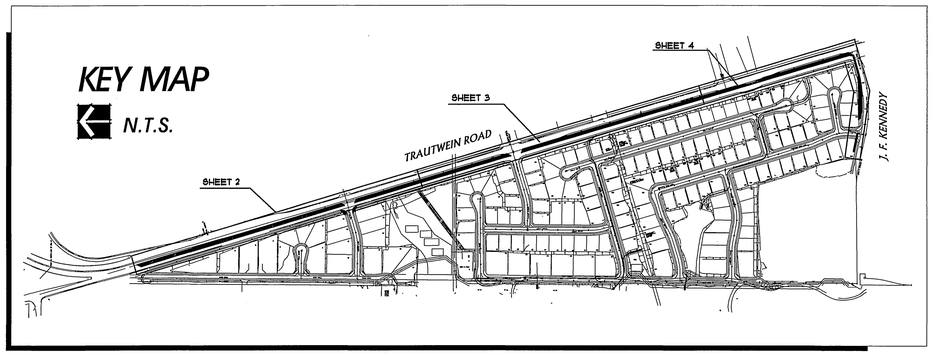

GENERAL NOTES :

GENERAL NOTES FOR HOA MAINTAINED PUBLIC LANDSCAPES

1. ALL RELATED WORK SHALL CONFORM TO THE CITY OF RIVERSIDE PARK AND RECREATION DEPARTMENT STANDARDS, INCLUDING CITY TRAIL STANDARDS AND SPECIFICATIONS FOR PLANTING AND IRRIGATION WORK. (SPECIFICATIONS SECTION 02441 AND 02480).
2. WHEN CALLING FOR INSPECTIONS CONTACT THE PARK PROJECTS INSPECTOR A MINIMUM OF 48 HOURS IN ADVANCE AT (909) 715-3469 TO SCHEDULE AN INSPECTION. A FIELD NOTICE WILL BE ISSUED AS WRITTEN APPROVAL FOR EACH STAGE OF INSPECTION. A VERBAL APPROVAL WILL NOT BE ACCEPTABLE. INSPECTIONS ARE REQUIRED PER THE STANDARD SPECIFICATIONS, AND INCLUDE BUT NOT NECESSARILY LIMITED TO THE FOLLOWING:
   - A. AFTER COMPLETION OF FINAL GRADING OF THE LOTS AND WHEN ALL UTILITY SERVICES AND SEWER LATERALS HAVE BEEN MARKED, BUT PRIOR TO INITIATING ANY TRAILS CONSTRUCTION AND / OR LANDSCAPE WORK WITHIN IN THE PUBLIC RIGHT OF WAY.
   - B. AT TIME OF INSTALLATION OF IRRIGATION SLEEVES AND CONSTANT PRESSURE MAINLINES, BUT PRIOR TO BACK FILL OF TRENCHES FOR SAME (NOTE: MAINLINES MUST BE PRESSURE TESTED IN THE PRESENCE OF THE PARK PROJECTS INSPECTOR)
   - C. AT TIME OF INSTALLATION OF RECREATIONAL TRAILS FOR INSPECTION OF D.G. SUBGRADE AND TRAIL SURFACING INSTALLATION!
   - D. AT TIME OF INSTALLATION OF IRRIGATION VALVES, LATERAL AND HEADS!
   - E. FOR SPOTTING OF ALL TREES PRIOR TO DIGGING PLANTING PITS!
   - F. WHILE DIGGING PLANT PITS AND PLANTING/RELOCATING TREES!
   - G. AFTER PLANTING AND ALL OTHER INDICATED OR SPECIFIED WORK HAS BEEN COMPLETED, FOR START OF MAINTENANCE!
   - H. AT SUBSTANTIAL COMPLETION OF THE PROJECT FOR THE CITY'S ACCEPTANCE TO START THE REQUIRED MAINTENANCE PERIOD! AT THE END OF THE MAINTENANCE PERIOD, THE CONTRACTOR/DEVELOPER SHALL CALL THE PARK PROJECTS INSPECTOR AT (909) 715-3469 FOR A FINAL ACCEPTANCE INSPECTION IN ORDER TO BE RELEASED FROM MAINTENANCE. DEVELOPER'S BONDS WILL NOT BE RELEASED UNTIL THE REQUIREMENT OF WRITTEN NOTIFICATION FROM THE CITY THAT THE PROJECT HAS PASSED FINAL INSPECTION AND THE PARK AND RECREATION DEPARTMENT HAS RECEIVED WRITTEN NOTICE FROM THE HOA INDICATING THEIR ASSUMPTION OF MAINTENANCE RESPONSIBILITIES
3. ALL LANDSCAPE IMPROVEMENTS WITHIN THE PUBLIC RIGHT OF WAY AND/OR LANDSCAPE EASEMENT AREAS ARE TO BE INSTALLED PRIOR TO THE RELEASE OF THE SURETY POSTED BY THE DEVELOPER TO GUARANTEE THEIR INSTALLATION.
4. THE DEVELOPER SHALL BE RESPONSIBLE TO ACCEPTABLY MAINTAIN ALL PLANTINGS FOR A MINIMUM PERIOD OF ONE (1) YEAR.
5. ALL PUBLIC LANDSCAPE AREAS TO BE PUBLICLY MAINTAINED MUST BE AUTOMATICALLY IRRIGATED.
6. NO PERSON SHALL PERFORM ANY CONSTRUCTION OR INSTALL ANY OBJECTS WITHIN THE PUBLIC RIGHTS-OF-WAY OR EASEMENTS OF THE CITY OF RIVERSIDE WITHOUT A VALID CONSTRUCTION PERMIT ISSUED BY THE CITY'S PUBLIC WORKS DEPARTMENT.
7. IT SHALL BE THE RESPONSIBILITY OF THE CONTRACTOR TO CLEAR THE RIGHT OF WAY IN ACCORDANCE WITH THE PROVISIONS OF LAW AS IT AFFECTS EACH UTILITY INCLUDING IRRIGATION LINES AND APPURTENANCES AND AT NO COST TO THE CITY.
8. CONTRUCTION SHALL BE IN ACCORDANCE WITH THE CITY OF RIVERSIDE DEPARTMENT OF PUBLIC WORKS, STANDARD DRAWINGS, ITS SUPPLEMENTAL NOTES AND THE STANDARD SPECIFICATIONS FOR PUBLIC WORKS CONSTRUCTION, CURRENT EDITION.
9. THE ARCHITECT SIGNING THESE PLANS IS RESPONSIBLE FOR ASSURING THE ACCURACY AND ACCEPTABILITY OF THE WORKS HEREON. IN THE EVENT OF DISCREPANCIES ARISING DURING CONSTRUCTION, THE PRIVATE ENGINEER SHALL BE RESPONSIBLE FOR DETERMINING AN ACCEPTABLE SOLUTION AND REVISING THE PLANS FOR APPROVAL BY THE CITY (THIS NOTE REQUIRED ON ALL PLAN)

* NOTE: IN THE INTEREST OF PUBLIC SAFETY AND MAINTENANCE THE PARK PROJECTS INSPECTOR SHALL HAVE THE AUTHORITY TO REVISE THE TREE QUANTITIES AND LOCATIONS SHOWN ON APPROVED PLANS BASED UPON FIELD CONDITIONS FOUND AT THE TIME OF INSTALLATION OF THE TREES.

SHEET INDEX :

TITLE SHEET	1
CONSTRUCTION/ STAKING PLAN	2
CONSTRUCTION/ STAKING PLAN	3
CONSTRUCTION/ STAKING PLAN	4
CONSTRUCTION DETAILS & SPECS	5

NOTE: -THE PROPOSED REVERSE FRONTAGE WALLS ALONG TRAUTWEIN RD. & J.F. KENNEDY ARE TO BE MAINTAINED BY THE HOME OWNERS ASSOCIATION OF THE SUBDIVISION.

NOTE: THESE PLANS DO NOT REQUIRE PARKS DEPARTMENT SIGNATURE/APPROVAL PER BOB JOHNSON 10/2000

PLANNING DEPARTMENT

SIGNATURE — DATE 3/1/01

Underground Service Alert
Call: TOLL FREE
1-800
227-2600
TWO WORKING DAYS BEFORE YOU DIG

PRIVATE ENGINEERING NOTE

CONSTRUCTION CONTRACTOR AGREES THAT IN ACCORDANCE WITH GENERALLY ACCEPTED CONSTRUCTION PRACTICES, CONSTRUCTION CONTRACTOR WILL BE REQUIRED TO ASSUME SOLE AND COMPLETE RESPONSIBILITY FOR JOB SITE CONDITIONS DURING THE COURSE OF CONSTRUCTION OF THE PROJECT, INCLUDING SAFETY OF ALL PERSONS AND PROPERTY! THAT THIS REQUIREMENT SHALL BE MADE TO APPLY CONTINUOUSLY AND NOT BE LIMITED TO NORMAL WORKING HOURS, AND CONSTRUCTION CONTRACTOR FURTHER AGREES TO DEFEND, INDEMNIFY AND HOLD DESIGN PROFESSIONAL HARMLESS FROM ANY AND ALL LIABILITY, REAL OR ALLEGED, IN CONNECTION WITH THE PERFORMANCE OF WORK ON THIS PROJECT, EXCEPTING LIABILITY ARISING FROM THE SOLE NEGLIGENCE OF DESIGN PROFESSIONAL.

BENCHMARK

RIVERSIDE COUNTY BENCHMARK STAMPED V38-64
AT SOUTHWEST CORNER OF PLUMMER ROAD AND VAN BUREN BOULEVARD. 2958 FEET SOUTH OF VAN BUREN BOULEVARD. 2650 FEET WEST OF PLUMMER ROAD, ON THE TOP OF A 48 FOOT x 18" FOOT GRANITE BOULDER A BRASS DISK FLUSH AND MARKED.
ELEV. 1638.14

LICENSED LANDSCAPE ARCHITECT — DAVID S. NEAULT — No. 2884 — STATE OF CALIFORNIA

David Neault Associates, Inc.
landscape architecture • planning • golf course architecture
City of Riverside Business Tax Account No. 100035-Exp. 10/29/01
41877 Enterprise Circle North #200
Temecula, CA. 92590
Tel: 909/296-3430 Fax: 909/296-3431

DAVID S. NEAULT — 2884
PREPARED BY: 2/23/01 — R.L.A. NO. — DATE 2/23/01

MARK	REVISIONS:	APPR.	DATE

DESIGNED BY BT DRAWN BY BT CHECKED BY BT

CITY OF RIVERSIDE
PUBLIC WORKS DEPARTMENT

APPROVED BY	DATE	BY	PUBLIC WORKS DIRECTOR
PRINCIPAL ENGINEER	3/12/2001		
PARK DEPARTMENT	SEE NOTE ABOVE		
TRAFFIC DIVISION			R. Mc Dratt
DEPUTY P.W. DIRECTOR	3/12/01		
STREET SERVICES	3-1-01		DATE 3-13-01

REVERSE FRONTAGE WALL CONSTRUCTION PLAN
TITLE SHEET
TRACT 28828
J.F. KENNEDY & TRAUTWEIN RD.

ACCOUNT NO. XXXX
R-3590-WP
SHEET 1 OF 5
01/23/2001

PUBLIC WORKS L-1 TRACT 28828 SHEFFIELD HOMES 01-23-2001

INDEXED 4-12-01 HH

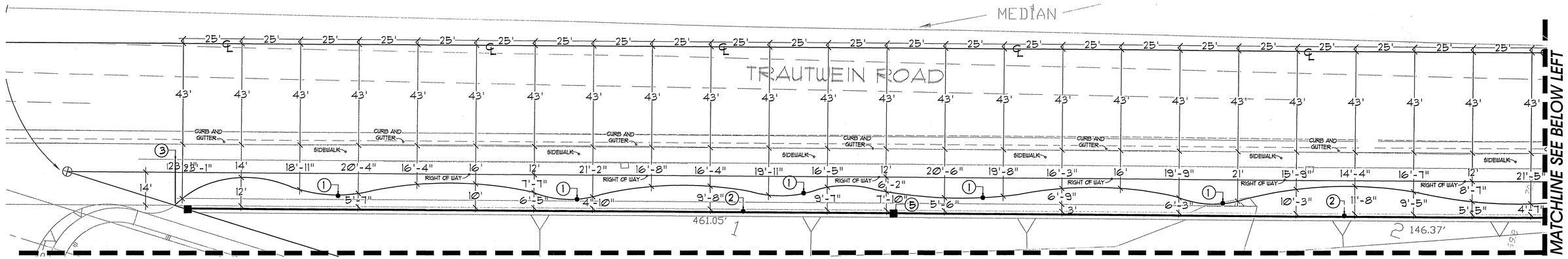

PLAN VIEW.

LIMIT OF WORK

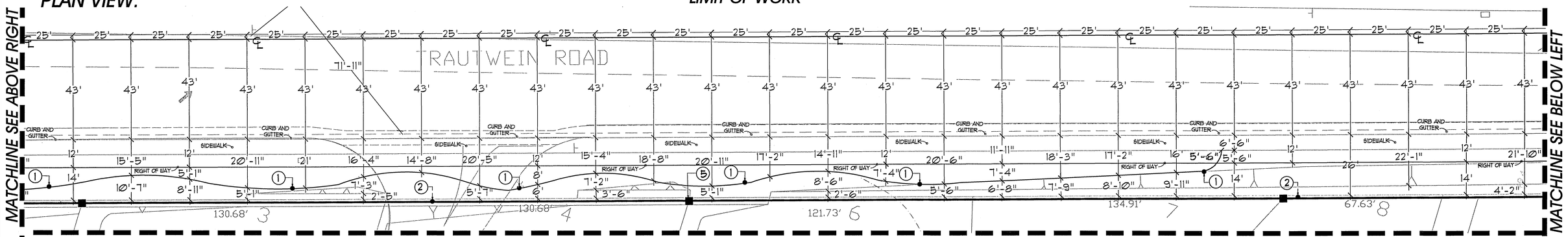

PLAN VIEW.

LIMIT OF WORK

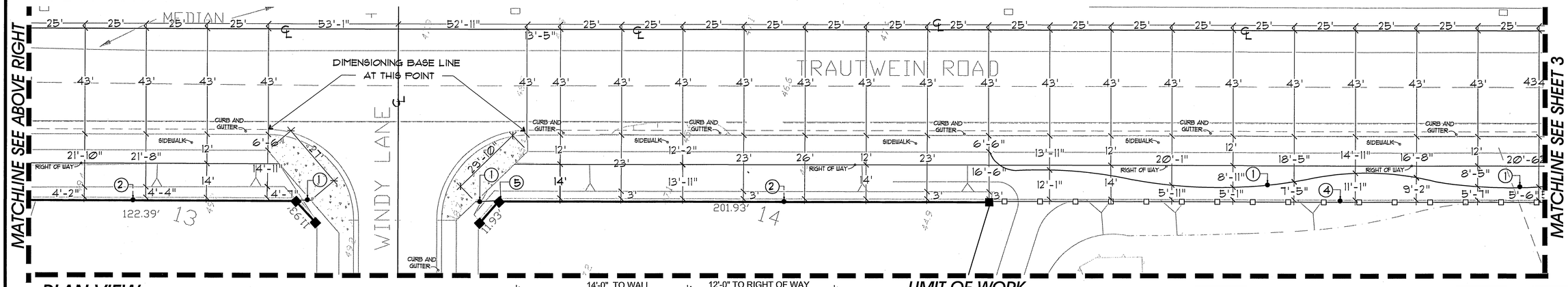

PLAN VIEW.

LIMIT OF WORK

LEGEND:

1. CONCRETE MOW STRIP
2. PERIMETER WALL
3. REDWOOD HEADER
4. TUBULAR STEEL FENCE
5. PERIMETER PILASTER

PLANNING DEPARTMENT	
SIGNATURE	DATE 2/23/01

NOTE:

THE PRIVATE ENGINEER SIGNING THESE PLANS IS RESPONSIBLE FOR ASSURING THE ACCURACY AND ACCEPTABILITY OF THE WORK HEREON. IN THE EVENT OF DISCREPANCIES ARISING DURING CONSTRUCTION, THE PRIVATE ENGINEER SHALL BE RESPONSIBLE FOR DETERMINING AN ACCEPTABLE SOLUTION AND REVISING THE PLANS FOR APPROVAL BY THE CITY.

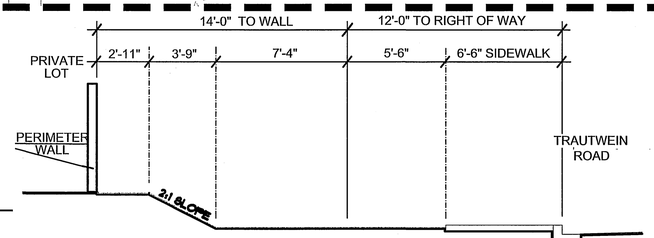

TYPICAL SECTION (TRAUTWEIN ROAD).

SCALE: 1/4" = 1'-0"

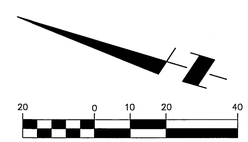

SCALE: 1"=20'

SEE SHEET 5 FOR DETAILS & SPEC'S

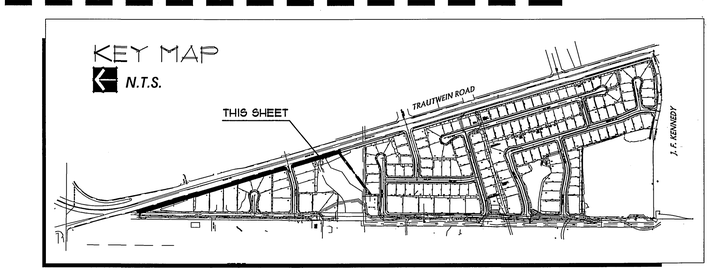

CALL BEFORE YOU DIG — Underground Service Alert. Call: TOLL FREE 1-800 227-2600. TWO WORKING DAYS BEFORE YOU DIG

PRIVATE ENGINEERING NOTE

CONSTRUCTION CONTRACTOR AGREES THAT IN ACCORDANCE WITH GENERALLY ACCEPTED CONSTRUCTION PRACTICES, CONSTRUCTION CONTRACTOR WILL BE REQUIRED TO ASSUME SOLE AND COMPLETE RESPONSIBILITY FOR JOB SITE CONDITIONS DURING THE COURSE OF CONSTRUCTION OF THE PROJECT, INCLUDING SAFETY OF ALL PERSONS AND PROPERTY; THAT THIS REQUIREMENT SHALL BE MADE TO APPLY CONTINUOUSLY AND NOT BE LIMITED TO NORMAL WORKING HOURS, AND CONSTRUCTION CONTRACTOR FURTHER AGREES TO DEFEND, INDEMNIFY AND HOLD DESIGN PROFESSIONAL HARMLESS FROM ANY AND ALL LIABILITY, REAL OR ALLEGED, IN CONNECTION WITH THE PERFORMANCE OF WORK ON THIS PROJECT, EXCEPTING LIABILITY ARISING FROM THE SOLE NEGLIGENCE OF DESIGN PROFESSIONAL.

BENCHMARK

RIVERSIDE COUNTY BENCHMARK, STAMPED V28-64 AT SOUTHWEST CORNER OF PLUMMER ROAD AND VAN BUREN BOULEVARD. 2642 FEET SOUTH OF VAN BUREN BOULEVARD. 365.0 FEET WEST OF PLUMMER ROAD, ON THE TOP OF A 4.0 FOOT x 18.0 FOOT GRANITE BOULDER A BRASS DISK FLUSH AND MARKED.
ELEV. 1630.4

LICENSED LANDSCAPE ARCHITECT — DAVID S. NEAULT — 06-30-2002 — STATE OF CALIFORNIA

David Neault Associates, Inc.
41877 Enterprise Circle North #200
Temecula, CA. 92590
Tel: 909/296-3430
Fax: 909/296-3431
landscape architecture • planning • golf course architecture
City of Riverside Business Tax Account No. 100035-Exp. 10/29/01
DAVID S. NEAULT 2884
PREPARED BY: RL.A. NO. DATE 2/23/01

MARK	REVISIONS	APPR.	DATE

DESIGNED BY BT DRAWN BY BT CHECKED BY BT

CITY OF RIVERSIDE
PUBLIC WORKS DEPARTMENT

APPROVED BY	DATE	BY	PUBLIC WORKS DIRECTOR
PRINCIPAL ENGINEER	3/12/2001		
PARK DEPARTMENT			R. Mc Grath
TRAFFIC DIVISION			
DEPUTY P.W. DIRECTOR	3/12/01	TDB	DATE 3-13-01
STREET SERVICES			

HORIZ. SCALE: 1" = 20'

REVERSE FRONTAGE WALL CONSTRUCTION PLAN

Construction Plan
TRACT 28828
TRAUTWEIN ROAD

ACCOUNT NO. XXXX

R-3590-WP

SHEET 2 OF 5

01/23/2001

PUBLIC WORKS L-2 TRACT 28828

INDEXED 4-12-01 GH

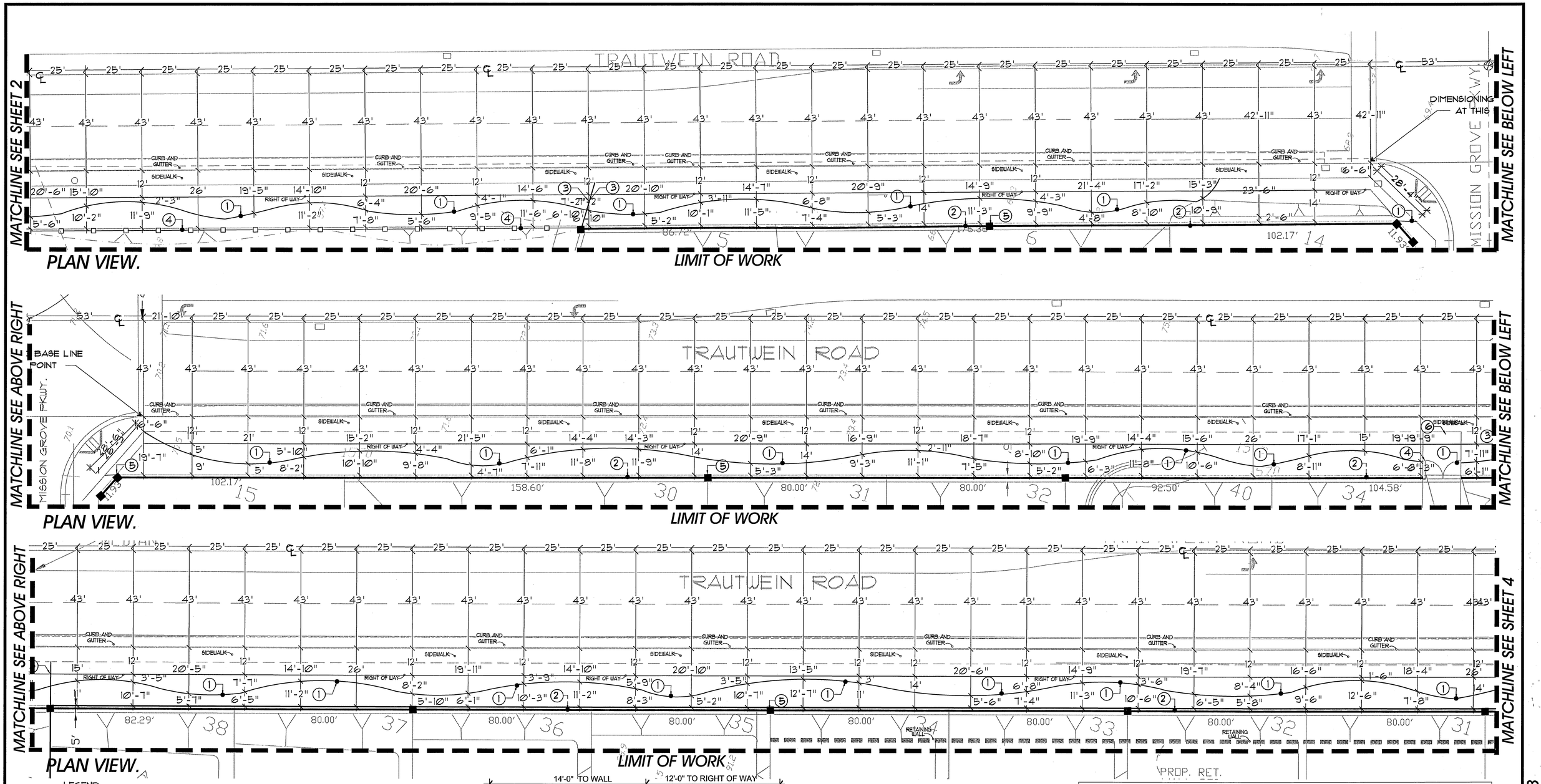

LEGEND:

1. CONCRETE MOW STRIP
2. PERIMETER WALL
3. REDWOOD HEADER
4. TUBULAR STEEL FENCE
5. PERIMETER PILASTER

PLANNING DEPARTMENT	
SIGNATURE	2/23/01 DATE

NOTE:
THE PRIVATE ENGINEER SIGNING THESE PLANS IS RESPONSIBLE FOR ASSURING THE ACCURACY AND ACCEPTABILITY OF THE WORK HEREON. IN THE EVENT OF DISCREPANCIES ARISING DURING CONSTRUCTION, THE PRIVATE ENGINEER SHALL BE RESPONSIBLE FOR DETERMINING AN ACCEPTABLE SOLUTION AND REVISING THE PLANS FOR APPROVAL BY THE CITY.

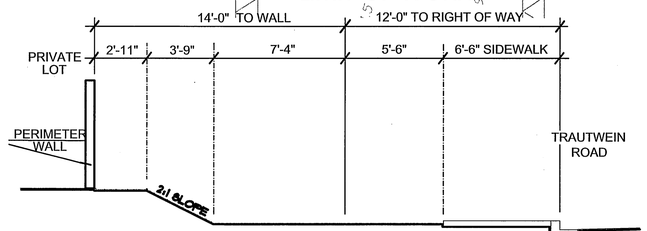

TYPICAL SECTION (TRAUTWEIN ROAD)

SCALE: 1/4" = 1'-0"

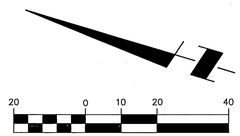

SCALE: 1"=20'

SEE SHEET 5 FOR DETAILS & SPEC'S

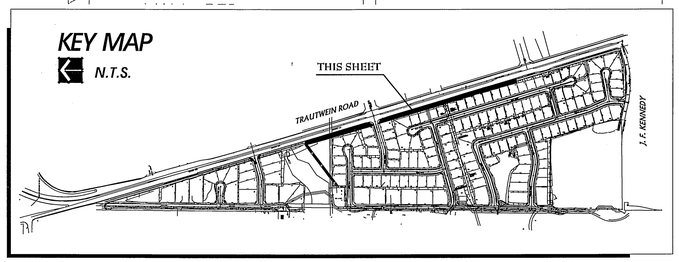

Underground Service Alert
Call: TOLL FREE
1-800
227-2600
TWO WORKING DAYS BEFORE YOU DIG

PRIVATE ENGINEERING NOTE

CONSTRUCTION CONTRACTOR AGREES THAT IN ACCORDANCE WITH GENERALLY ACCEPTED CONSTRUCTION PRACTICES, CONSTRUCTION CONTRACTOR WILL BE REQUIRED TO ASSUME SOLE AND COMPLETE RESPONSIBILITY FOR JOB SITE CONDITIONS DURING THE COURSE OF CONSTRUCTION OF THE PROJECT, INCLUDING SAFETY OF ALL PERSONS AND PROPERTY; THAT THIS REQUIREMENT SHALL BE MADE TO APPLY CONTINUOUSLY AND NOT BE LIMITED TO NORMAL WORKING HOURS, AND CONSTRUCTION CONTRACTOR FURTHER AGREES TO DEFEND, INDEMNIFY AND HOLD DESIGN PROFESSIONAL HARMLESS FROM ANY AND ALL LIABILITY, REAL OR ALLEGED, IN CONNECTION WITH THE PERFORMANCE OF WORK ON THIS PROJECT, EXCEPTING LIABILITY ARISING FROM THE SOLE NEGLIGENCE OF DESIGN PROFESSIONAL.

BENCHMARK

RIVERSIDE COUNTY BENCHMARK, STAMPED V56-64 AT SOUTHWEST CORNER OF PLUMTREE ROAD AND VAN BUREN BOULEVARD, 25.0 FEET SOUTH OF VAN BUREN BOULEVARD, 25.0 FEET WEST OF PLUMTREE ROAD, ON THE TOP OF A 4.0 FOOT x 1.0 FOOT GRANITE BOULDER A BRASS DISK FLUSH AND MARKED.
ELEV. 1.63814

LICENSED LANDSCAPE ARCHITECT — Edward S. Neault No. 2884 — 06-30-2002 — STATE OF CALIFORNIA

David Neault Associates, Inc.
landscape architecture • planning • golf course architecture
City of Riverside Business Tax Account No. 100035-Exp. 10/31/01
41877 Enterprise Circle North #200
Temecula, CA. 92590
Tel: 909/296-3430
Fax: 909/296-3431
DAVID S. NEAULT
PREPARED BY: R.L.A. NO. 2884 DATE 2/23/01

MARK	REVISIONS:	APPR.	DATE

DESIGNED BY HT DRAWN BY HT CHECKED BY HT

CITY OF RIVERSIDE
PUBLIC WORKS DEPARTMENT

APPROVED BY	DATE	BY
PRINCIPAL ENGINEER	3/12/2001	
PARK DEPARTMENT		
TRAFFIC DIVISION		
DEPUTY P.W. DIRECTOR	3/16/01	DB
STREET SERVICES		

PUBLIC WORKS DIRECTOR
R. Mc Grath
DATE 3-13-01

REVERSE FRONTAGE WALL CONSTRUCTION PLAN
Construction Plan
TRACT 28828
TRAUTWEIN ROAD

HORIZ. SCALE: 1" = 20'

ACCOUNT NO. XXXX
R-3590-WP
SHEET 3 OF 5
01/23/2001

PUBLIC WORKS L-3 TRACT 28828

INDEXED 4-12-01 JH

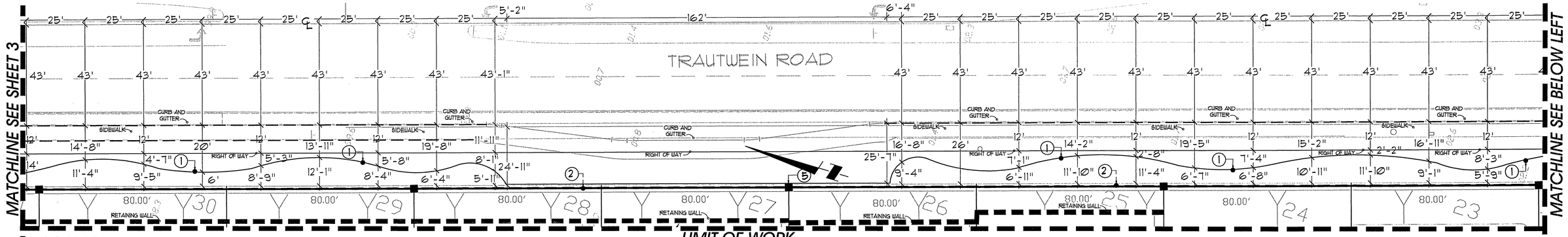

PLAN VIEW.

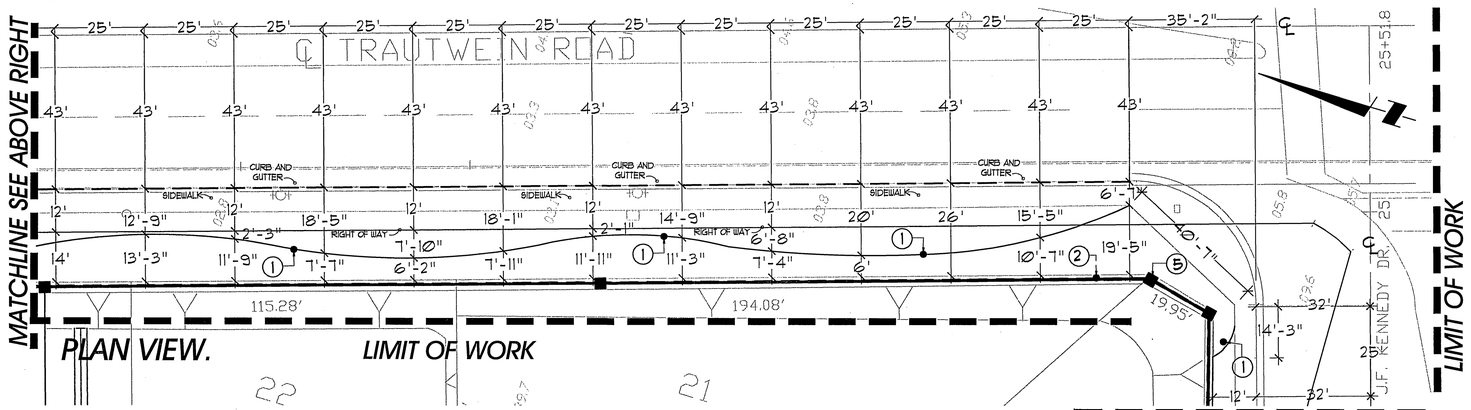

PLAN VIEW.

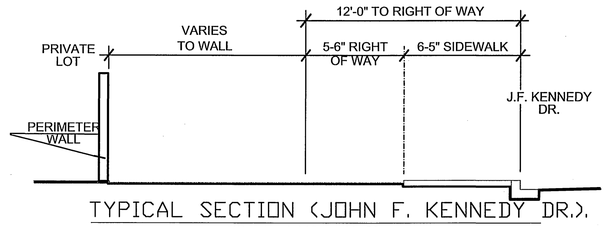

TYPICAL SECTION (JOHN F. KENNEDY DR.).

SCALE: 1/4" = 1'-0"

SEE SHEET 5 FOR DETAILS & SPEC'S

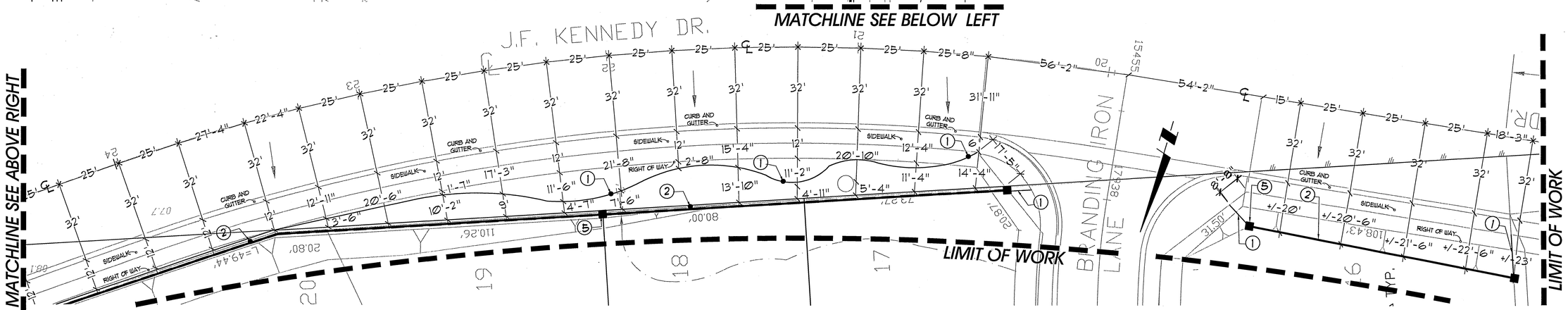

PLAN VIEW.

NOTE:

THE PRIVATE ENGINEER SIGNING THESE PLANS IS RESPONSIBLE FOR ASSURING THE ACCURACY AND ACCEPTABILITY OF THE WORK HEREON. IN THE EVENT OF DISCREPANCIES ARISING DURING CONSTRUCTION, THE PRIVATE ENGINEER SHALL BE RESPONSIBLE FOR DETERMINING AN ACCEPTABLE SOLUTION AND REVISING THE PLANS FOR APPROVAL BY THE CITY.

LEGEND:

1. CONCRETE MOW STRIP
2. PERIMETER WALL
3. REDWOOD HEADER
4. TUBULAR STEEL FENCE
5. PERIMETER PILASTER

20 0 10 20 40

SCALE: 1"=20'

PLANNING DEPARTMENT

SIGNATURE — DATE 3/23/01

KEY MAP

N.T.S.

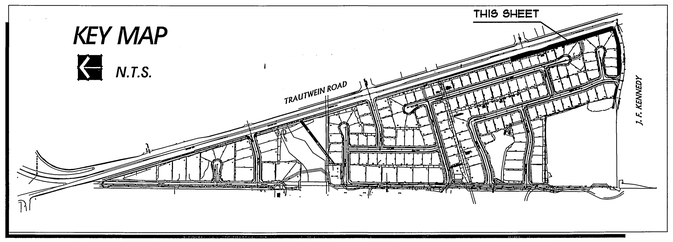

CALL BEFORE YOU DIG — Underground Service Alert — Call: TOLL FREE 1-800 227-2600 — TWO WORKING DAYS BEFORE YOU DIG

PRIVATE ENGINEERING NOTE

CONSTRUCTION CONTRACTOR AGREES THAT IN ACCORDANCE WITH GENERALLY ACCEPTED CONSTRUCTION PRACTICES, CONSTRUCTION CONTRACTOR WILL BE REQUIRED TO ASSUME SOLE AND COMPLETE RESPONSIBILITY FOR JOB SITE CONDITIONS DURING THE COURSE OF CONSTRUCTION OF THE PROJECT, INCLUDING SAFETY OF ALL PERSONS AND PROPERTY; THAT THIS REQUIREMENT SHALL BE MADE TO APPLY CONTINUOUSLY AND NOT BE LIMITED TO NORMAL WORKING HOURS, AND CONSTRUCTION CONTRACTOR FURTHER AGREES TO DEFEND, INDEMNIFY AND HOLD DESIGN PROFESSIONAL HARMLESS FROM ANY AND ALL LIABILITY, REAL OR ALLEGED, IN CONNECTION WITH THE PERFORMANCE OF WORK ON THIS PROJECT, EXCEPTING LIABILITY ARISING FROM THE SOLE NEGLIGENCE OF DESIGN PROFESSIONAL.

BENCHMARK

RIVERSIDE COUNTY BENCHMARK STAMPED VB6-64 AT SOUTHWEST CORNER OF PLUMMER ROAD AND VAN BUREN BOULEVARD, 2590 FEET SOUTH OF VAN BUREN BOULEVARD, 2050 FEET WEST OF PLUMMER ROAD, ON THE TOP OF A 4.40 FOOT x 10.0 FOOT GRANITE BOULDER A BRASS DISK FLUSH AND MARKED.

ELEV. 1630.14

LICENSED LANDSCAPE ARCHITECT — DAVID S. NEAULT — No. 2884 — 06-30-2002 — STATE OF CALIFORNIA

David Neault Associates, Inc.
landscape architecture • planning • golf course architecture
City of Riverside Business Tax Account No. 100025 Exp. 10/30/01
41877 Enterprise Circle North #200
Temecula, CA. 92590
Tel: 909/296-3430
Fax: 909/296-3431
DAVID S. NEAULT 2884
PREPARED BY: R.L.A. NO.
DATE 2/23/01

MARK	REVISIONS	APPR.	DATE

DESIGNED BY BT DRAWN BY BT CHECKED BY BT

CITY OF RIVERSIDE
PUBLIC WORKS DEPARTMENT

APPROVED BY	DATE	BY
PRINCIPAL ENGINEER	3/12/2001	
PARK DEPARTMENT		
TRAFFIC DIVISION		
DEPUTY P.W. DIRECTOR	3/13/01	
STREET SERVICES		

PUBLIC WORKS DIRECTOR — DATE 3-13-01

REVERSE FRONTAGE WALL CONSTRUCTION PLAN

Construction Plan
TRACT 28828
TRAUTWEIN & J.F.KENNEDY

HORIZ. SCALE: 1" = 20'

ACCOUNT NO. XXXX

R-3590-WP

SHEET 4 OF 5

01/23/2001

PUBLIC WORKS L-4 TRACT 28828

INDEXED 4-12-01

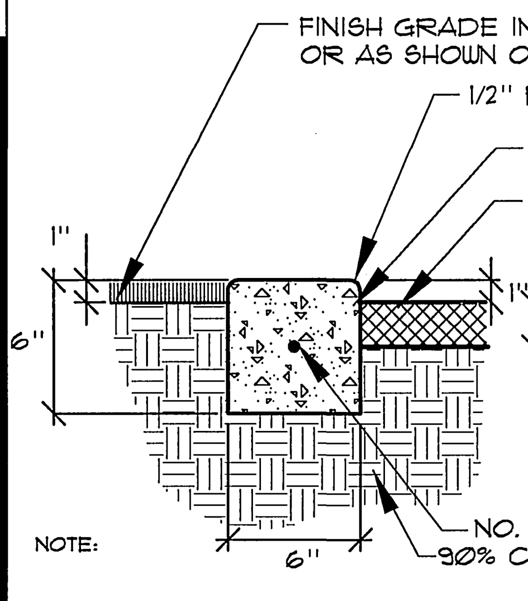

NOTE:

1. Weakened Plane Joints at 15' O.C.
2. Expansion Joints atT 80' O.C. and at all intersections and ends
3. See Specisication bellow for more information

(1) CONCRETE MOW STRIP N.T.S

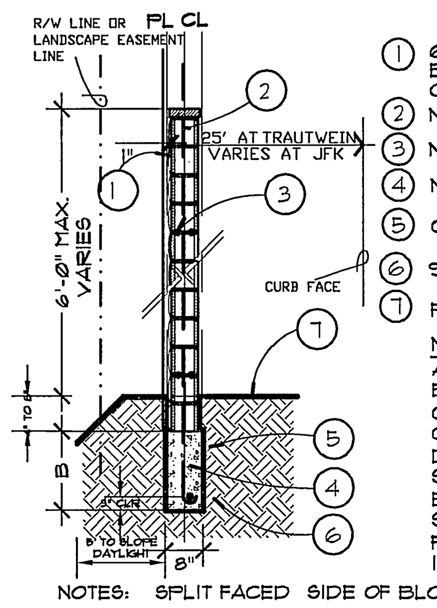

(1) 6X8X16" WEDGELOCK SPLIT FACED(ONE SIDE) BY ORCO W/ 2X8X16" PRECISION CAP BY ORCO OR EQUAL AS SHOWN
(2) No. 4 VERT. REBAR @ 32" O.C.
(3) No. STD. DUR-O-WALL @ 3 LOCATIONS.
(4) No 4 HORIZ. REBAR CONT. TOP & BOTT.
(5) CONCRETE FOOTING.
(6) 90% COMPATED SUBGRADE
(7) FINISH GRADE.

NOTES:
A. GROUT CELL W/REINF. ONLY.
B. STAGGER ALL BLOCKS.
C. REBAR SHALL BE CENTERED IN CELL IN WHICH IT IS LOCATED.
D. COLOR FOR SPLIT FACE BLOCK SHALL BE 'TAN M/W'.
E. COLOR FOR PRECISION CAP SHALL BE 'BUFF'.
F. COLORS FOR BLOCK ARE STANDARD IN STOCK COLORS.

NOTES: SPLIT FACED SIDE OF BLOCK IS TO FACE THE ADJACENT STREET

WIND CONDITION (SPECIFIED BY BUILDING OFFICIALS)	B DIMENSION	"X" BAR	"Y" BAR
70 & 80 MPH EXPOSURE B	1'-6" FOR 70 B 1'-10" FOR 80 B	# 4 @ 48" O.C. OR #4 @ 45" O.C. W/18" LONG BLOCKS	# 4 @ 48" O.C. OR # 4 @ 45" O.C. W/18" LONG BLOCKS
70MPH EXPOSURE C	2'-0"	# 4 @ 40" O.C. OR #4 @ 36" O.C. W/18" LONG BLOCKS	# 4 @ 40" O.C. OR # 4 @ 36" O.C. W/18" LONG BLOCKS
80 MPH EXPOSURE C	2'-2"	# 4 @ 32" O.C. OR #4 @ 27" O.C. W/18" LONG BLOCKS	# 4 @ 32" O.C. OR # 4 @ 27" O.C. W/18" LONG BLOCKS

DESIGN CRITERIA
1. ALLOWABLE SOIL BEARING PRESSURE = 1,500 PSF
2. ALLOWABLE LATERAL PASSIVE PRESSURE = 150 PCF
3. CONC/GROUT STRENGTH=2,000 PSI @ 28 DAYS
4. REINFORCED STEEL = 40 GRADE
5. SEISMIC ZONE = 4

NOTES:
1. CONCRETE MIX FOR FOOTING TO BE 1 PART CEMENT TO 2 1/2 PARTS SAND TO 3 1/2 PARTS GRAVEL MIX WITH A MAXIMUM OF 1 1/2 GALLONS OF WATER PER SACK. Fc = 2000 PSI.
2. CONCRETE BLOCK UNITS SHALL CONFORM TO U.B.C. STANDARD NUMBER 21
3. REINFORCING STEEL TO BE DEFORMED AND CONFORM TO A.S.T.M. SPECS. A 615 GRADE 40 OR GRADE 60.
4. REBAR SHALL BE CENTERED IN THE CONCRETE BLOCK CELL IN WHICH IT IS LOCATED.
5. CONCRETE BLOCKS UNITS ARE TO BE STAGGERED.
6. CONCRETE BLOCK UNITS TO HAVE VERTICAL CONTINUITY OF THE CELLS UNOBSTRUCTED. ALL CELLS CONTAINING VERTICAL REINFORCING SHALL BE SOLID GROUTED.
7. MORTAR MIX FOR CONCRETE BLOCK TO BE 1 PART CEMENT OR 1/2 PART LIME TO 4-1/2 PARTS DAMP LOOSE SAND.
8. GROUT MIX FOR CONCRETE BLOCK WALL TO BE 1 PART CEMENT TO 3 PARTS SAND TO WHICH MAY BE ADDED NOT MORE THAN 1/10 PART LIME. SUFFICIENT WATER TO BE ADDED TO PRODUCE CONSISTENCY FOR POURING WITHOUT SEGREGATION OF THE CONSTITUENTS. THE GROUT MAY CONTAIN 2 PARTS PEA GRAVEL MAXIMUM SIZE OF 3/18".
9. BLOCK FENCE MAY BE PLACED TO EITHER SIDE OF PROPERTY LINE WITH IN 1". LOCATION TO BE VERIFIED WITH DEVELOPER PRIOR TO CONSTRUCTION.
10. FIRST INSPECTION TO BE AFTER TRENCHES ARE READY FOR CONCRETE AND ALL REQUIRED STEEL IS TIED IN PLACE. SECOND INSPECTION TO BE WHEN THE REQUIRED VERTICAL STEEL IS IN PLACE AND THE WALL IS READY TO GROUT.
11. FOUNDATION MUST BE POURED AGAINST UNDISTURBED SOIL WITH NO APPRECIABLE SLOPE OF SIDE WALLS ON ALL FOUNDATION TYPES.
12. HALF STRESSES ARE USE IN CALCULATIONS, CONSIDERING 1500 PSI MASONRY UNITS(NO SPECIAL INSPECTION).

(2) PERIMETER WALL

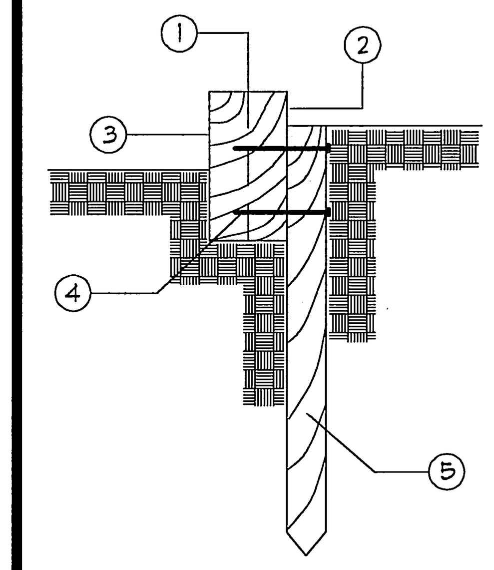

(1) 2X4" REDWOOD HEADER (CONST. GRADE) FOR CURVED EDGES-SEE PLAN.
(2) FINISH GRADE 1" FOR LAWNS AREAS.
(3) FINISH GRADE 2" FOR GROUNDCOVER AREAS
(4) (2) 8d GALV. NAILS PER STAKE.
(5) 1X2X12" REDWOOD STAKE AT 8' O.C. MIN. WITH 4' O.C. @ CURVED AREAS.

(3) REDWOOD HEADER

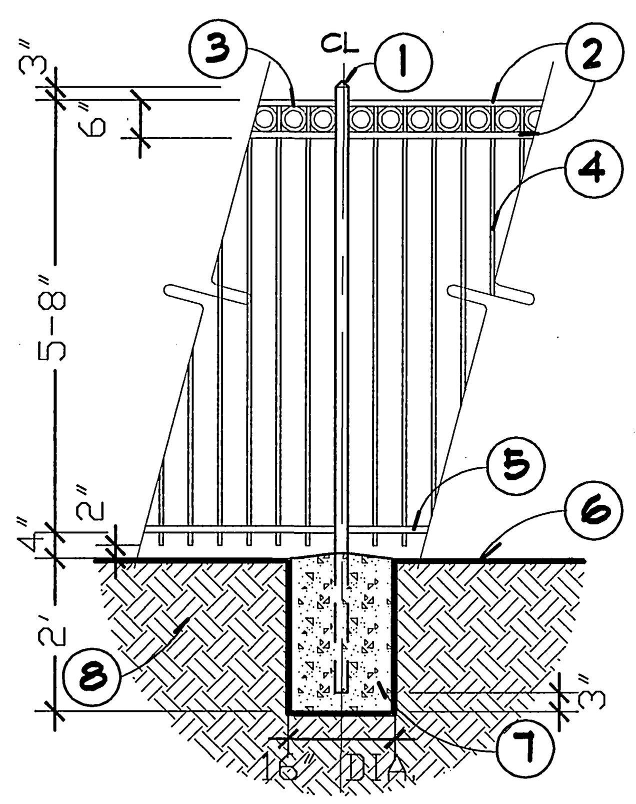

(1) 2" SQ. POST WITH CAP @ 8' O.C.
(2) 1X2" T.S. TOP RAILS.
(3) 4" DIA. STEEL ROUNDS.
(4) 5/8" SQ. T.S. PICKET @ 4" O.C.
(5) 1X2" T.S. BOTTOM RAIL.
(6) FINISH GRADE.
(7) CONCRETE FOOTING.
(8) 90% COMPACTED SUBGRADE.

notes:
1. All work shall conform to the City of Riverside Requirements
2. All T.S. Fencing shall be painted w/one coat primer and two coats enamel black paint.
3. See Specification below for more information.

(4) TUBULAR STEEL FENCE SCALE 1/2" = 1'-0"

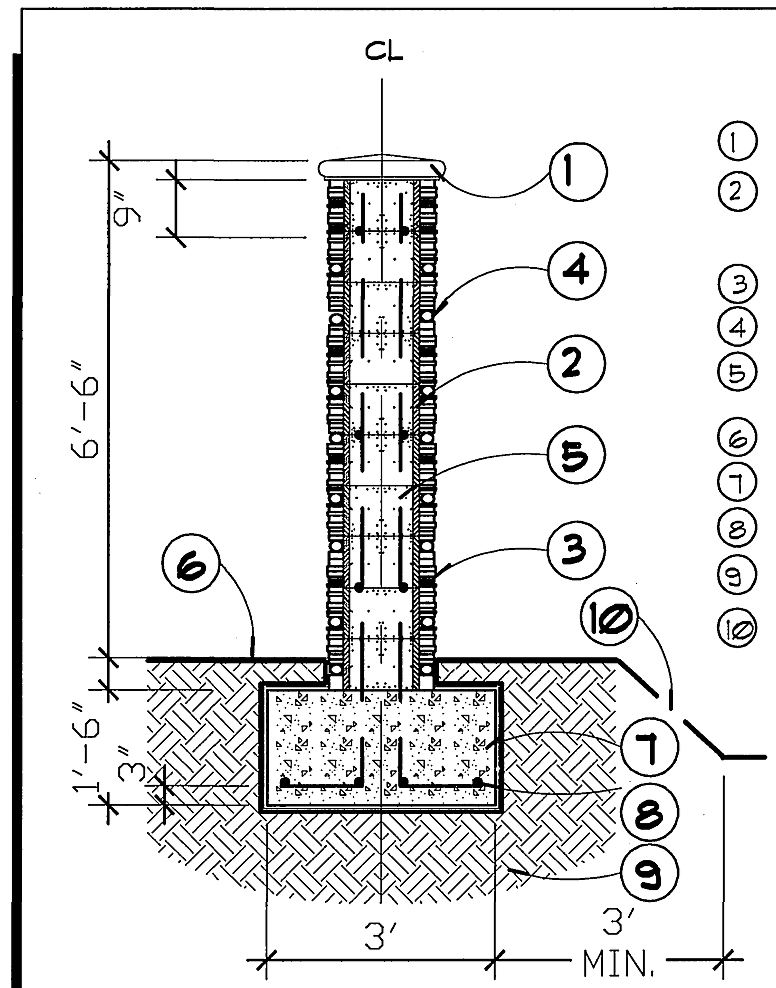

(1) 19" SQ. CONCRETE PILASTER CAP.
(2) 12X8X12" CONCRETE PRECISION PILASTER BLOCK - SOLID GROUT FILL.
(3) MFGD. LEDGSTONE.
(4) 3" TO 8" DIA. RIVER ROCK.
(5) No. 4 VERTICAL REBAR @ EA. CORNER.
(6) FINISH GRADE.
(7) CONCRETE FOOTING.
(8) No. 4 REBAR HORIZ. CONT.
(9) 90% COMPACTED SUBGRADE.
(10) 2:1 SLOPE

(5) PERIMETER PILASTER

CONCRETE SPECIFICATIONS

1. Concrete shall have a minimum compressive strength in 28 days of 2,500 PSI. Cement shall be type I.
2. Reinforcing shall comply with ASTM A615, grade 40.
3. No pipes or ducts shall be placed in concrete columns, walls or slabs unless specifically detailed.
4. Reinforcing detailing shall conform to the Concrete Reinforcing Steel Institute "Manual of Practice", latest edition.
5. Reinforcing, anchor bolts and all other embedded items shall be securely held in position prior to placing concrete.
6. Walls and columns shall be doweled from supports with bars of the same size and spacing
7. Splice continuous reinforcing with 40 diameters minimum lap.
8. All expansion joints shall be 1/2" pre molded felt material and installed where indicated, and at all buildings, walls and fixed improvements.
9. All expansion joints shall receive 1/2" thick sealing compound sealing compound. Color to match adjacent surface color.
10. All concrete walks shall receive a medium broom finish, unless otherwise indicated.
11. Score joints shall be tooled 1/4" wide by 1/4" deep as indicated.
12. Weakened plane joints shall be 1/4" wide by 1/2" slab thickness deep.

REINFORCED MASONRY

1. Concrete block units shall be medium weight and comply with ASTM C90, grade N. Provide deep-cut bond beam units.
2. Retaining walls and walls bellow grade should be grouted solid.
3. All cells containing reinforcing shall be grouted solid.
4. Immediately after grouting, consolidate grout using mechanical vibrating equipment. Roding will not be accepted.
5. Mortar shall consist of one part Portland cement, 3 1/2 to 4 parts sand based on dry loose volume, and not less than 1/4 part nor more than 1/2 part lime.
6. Grout shall be 2,000 PSI minimum, proportioned 1 cement, 3 sand, 2 pea gravel.
7. Reinforcing shall comply with ASTM A615, grade 40. Lap 40 diameters.
8. All stucco wall shall water sealed with thirty (30) days of stucco color coat. All stucco shall match architecture in color and finish, except as noted.

CONSTRUCT BLOCK WALL PER RIVERSIDE CITY STANDARD 704 OR APPROVED DESIGNS (SEE PLAN FOR HEIGHT(S)).
TYPE/COLOR OF BLOCK PRECISION BLOCK TAN COLOR MORTAR COLOR WHEAT OTHER________
SIZE 6X6X16" TYPE/COLOR CAP 8" PRECAST CONCRETE CAP TAN COLOR
THIS WALL REQUIRES A PERMIT AND INSPECTION FROM THE PUBLIC WORKS ENGINEERING DIVISION.

METAL FENCING / GATES

1. Fencing shall be seamless steel tubing, grade B, conforming to ASTM A501-81.
2. Landscape Contractor shall secure all field measurements requires for proper and adequate fabrication and installation.
3. Fencing and gates shall be fabricated and assembled in the shop to the greatest extent possible.
4. All welds and another connections exposed in the finished work in the field shall be ground and dressed smooth and so that the shape and profile of the item welded is preserved.
5. Gates shall received heavy-duty spring loaded hinge assemblies with self latching hardware.
6. All surfaces shall be prime coated with synthetic, rust-inhibiting primer. Final finish shall be electrostatically applied of two coats of lusterless alkyd enamel. See plan for color.
7. All gates shall be self-closing with steel stops.

PLANNING DEPARTMENT
SIGNATURE ZR DATE 2/1/01

CALL BEFORE YOU DIG
Underground Service Alert
Call: TOLL FREE
1-800
227-2600
TWO WORKING DAYS BEFORE YOU DIG

PRIVATE ENGINEERING NOTE

CONSTRUCTION CONTRACTOR AGREES THAT IN ACCORDANCE WITH GENERALLY ACCEPTED CONSTRUCTION PRACTICES, CONSTRUCTION CONTRACTOR WILL BE REQUIRED TO ASSUME SOLE AND COMPLETE RESPONSIBILITY FOR JOB SITE CONDITIONS DURING THE COURSE OF CONSTRUCTION OF THE PROJECT, INCLUDING SAFETY OF ALL PERSONS AND PROPERTY; THAT THIS REQUIREMENT SHALL BE MADE TO APPLY CONTINUOUSLY AND NOT BE LIMITED TO NORMAL WORKING HOURS, AND CONSTRUCTION CONTRACTOR FURTHER AGREES TO DEFEND, INDEMNIFY AND HOLD DESIGN PROFESSIONAL HARMLESS FROM ANY AND ALL LIABILITY, REAL OR ALLEGED, IN CONNECTION WITH THE PERFORMANCE OF WORK ON THIS PROJECT, EXCEPTING LIABILITY ARISING FROM THE SOLE NEGLIGENCE OF DESIGN PROFESSIONAL.

BENCHMARK

RIVERSIDE COUNTY BENCHMARK, STAMPED VB8-64 AT SOUTHWEST CORNER OF PLUMMER ROAD AND VAN BUREN BOULEVARD. 259.0 FEET SOUTH OF VAN BUREN BOULEVARD. 205.0 FEET WEST OF PLUMMER ROAD, ON THE TOP OF A 40 FOOT x 100 FOOT GRANITE BOULDER A BRASS DISK FLUSH AND MARKED.
ELEV. 1638.14

LICENSED LANDSCAPE ARCHITECT — David S. Neault 2884 — Signature — 06-30-2002 Renewal Date — Date — STATE OF CALIFORNIA

David Neault Associates, Inc.
41877 Enterprise Circle North #200
Temecula, CA. 92590
Tel: 909/296-3430
Fax: 909/296-3431
landscape architecture•planning • golf course architecture
City of Riverside Business Tax Account No. 400035-Exp. 10/29/01
DAVID S. NEAULT [signature] 2884
PREPARED BY: R.L.A. NO.
DATE 2/23/01

MARK	REVISIONS:	APPR.	DATE

DESIGNED BY BT DRAWN BY BT CHECKED BY BT

CITY OF RIVERSIDE
PUBLIC WORKS DEPARTMENT

APPROVED BY	DATE	BY
PRINCIPAL ENGINEER	3/12/2001	[signature]
PARK DEPARTMENT	—	—
TRAFFIC DIVISION	—	—
DEPUTY P.W. DIRECTOR	3/13/01	DB
STREET SERVICES	2-1-01	DOR

PUBLIC WORKS DIRECTOR [signature]
DATE 3-13-01

REVERSE FRONTAGE WALL
CONSTRUCTION PLAN
Construction Details & Spec's TRACT 28828
TRAUTWEIN & J.F.KENNEDY
HORIZ. SCALE: 1" = 20'

ACCOUNT NO. XXXX
R-3590-WP
SHEET 5 OF 5
01/23/2001

PUBLIC WORKS L-5 TRACT 28828

INDEXED 4-12-01 4H