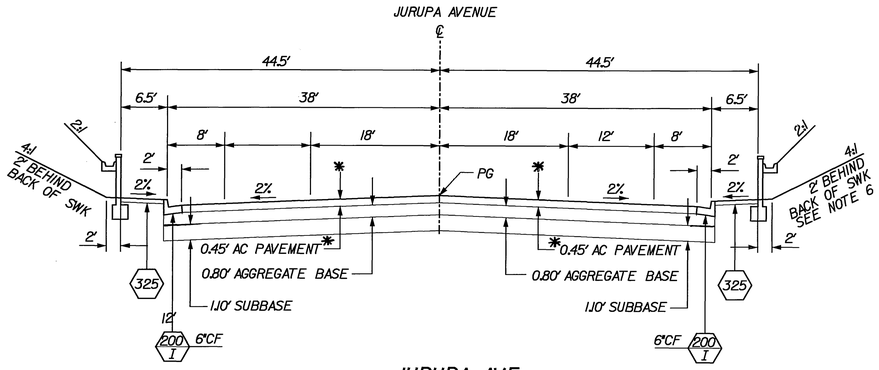

JURUPA AVE
TYPICAL SECTION WITHOUT MEDIAN

"J" 95+60.91 TO "J" 100+77.02
"J" 110+45.28 TO "J" 113+07.92

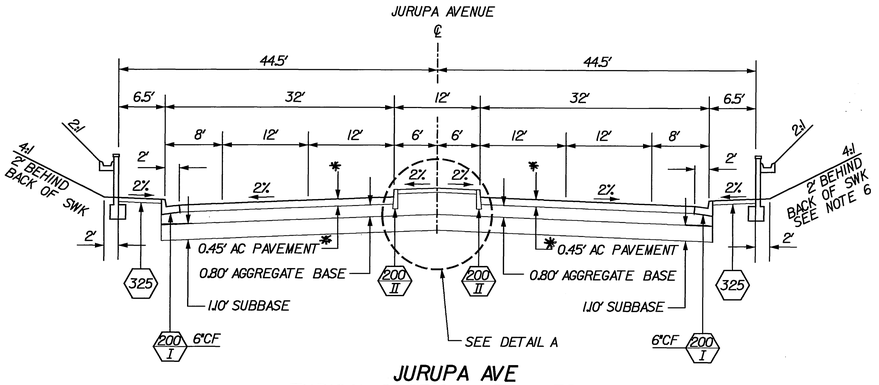

JURUPA AVE
TYPICAL SECTION WITH MEDIAN

"J" 100+97.02 TO "J" 110+25.28

NOTES:

1. STATIONING IS BASED ON JURUPA AVENUE UNDERPASS.
2. FOR TRANSITION BETWEEN SECTIONS, SEE MEDIAN NOSE DETAIL ON SHEET C-15.
3. FOR SLOPE ANGLES, LIMITS, AND TRANSITION LOCATIONS, SEE PLANS.
4. FOR MEDIAN OPENINGS AND REVERSE TAPER DETAILS, SEE CITY OF RIVERSIDE STD PLAN DWG NO. 121 AND 122.
5. FOR LIMITS OF RETAINING WALL, SEE PLAN SHEET C-16.
6. BETWEEN "J" 101+00 AND "J" 101+65, SLOPE VARIES: TOP OF SLOPE IS 2' BEHIND BACK OF SIDEWALK ON WILLIAM ST AND TOE OF SLOPE IS 2' BEHIND BACK OF BACK OF SIDEWALK ON JURUPA AVE. BETWEEN "J" 101+65 AND "J" 102+45, SLOPE VARIES: TOP OF SLOPE IS 2' BEHIND BACK OF SIDEWALK ON WILLIAM ST AND TOE OF SLOPE IS AT GUTTER BEHIND WALL.
7. FOR LIMITS OF GUTTER BEHIND WALL, SEE PLAN.
8. FRONT FACE OF WALL SHALL BE SPLIT-FACE BLOCK. BACK FACE OF WALL MAY BE SMOOTH-FACE BLOCK. CMU BLOCKS SHALL BE HARVEST SPLIT FACE, WITH HARVEST GOLD COLOR BY DAVIS COLORS, OR APPROVED EQUAL.
9. LEFT CROSS-SLOPE VARIES BETWEEN "W" 12+24.15 AND "W" 12+96.15. RIGHT CROSS-SLOPE VARIES BETWEEN "W" 10+22 AND "W" 11+90.
10. SIDEWALK SHALL BE 6.50', EXCEPT AT WALLS WHERE THE SIDEWALK SHALL BE 7.00'.
11. AT WHEELCHAIR RAMP LOCATIONS, THE DIMENSIONS OF THE WALL SHALL REMAIN CONSTANT RELATIVE TO THE STREET CENTERLINE (PG) (TW = PG + 2.29', TOP OF FOOTING = PG - 1.21') HEIGHT OF WALL WILL BE GREATER THAN 2'-6" AND COVER OVER FOOTING WILL BE LESS THAN 1.00'.

⬡ NUMBERS IN A HEXAGON ON THE PLAN, REFER TO THE CITY OF RIVERSIDE STANDARD DRAWINGS FOR CONSTRUCTION AND SHALL BE CONSTRUCTED ACCORDINGLY UNLESS MODIFICATIONS ARE NOTED ON THE PLAN.

* 0.35' DGAC BASE PLUS 0.1' ARHM-GG CAP

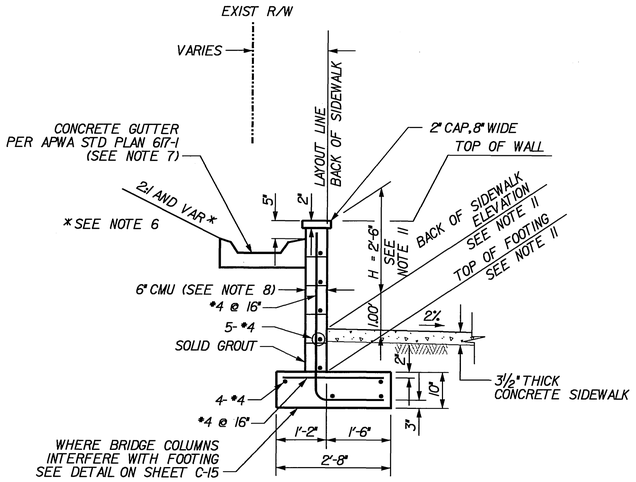

CONSTANT HEIGHT RETAINING WALL

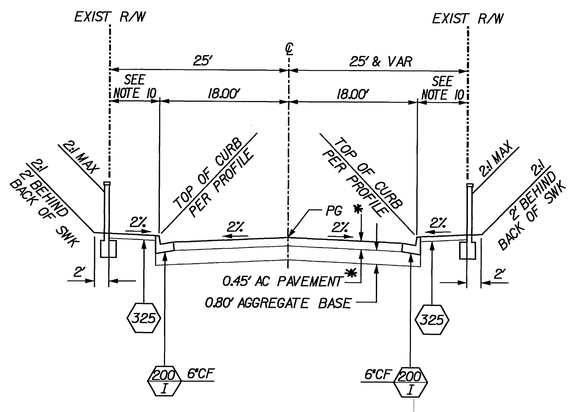

FLORENCE STREET

"F" 0+42 TO "F" 2+55

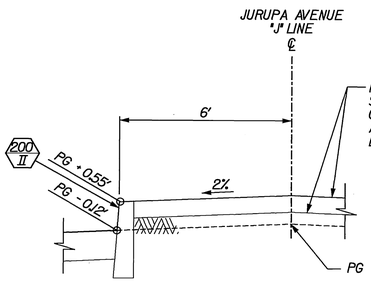

FULL-WIDTH MEDIAN

"J" 103+55.00 TO "J" 107+64.00

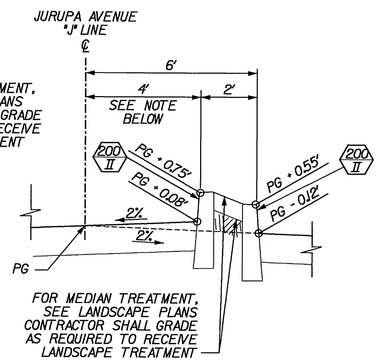

VARIABLE-WIDTH MEDIAN

"J" 100+97.02 TO "J" 102+35.00
"J" 108+84.00 TO "J" 110+25.28
"J" 102+35.00 TO "J" 103+55.00 - TAPER SECTION
"J" 107+64.00 TO "J" 108+84.00 - TAPER SECTION

DETAIL A

NOTE:

IN TAPER SECTION, DIMENSION VARIES BETWEEN 4' MAXIMUM AND -6' MINIMUM.
SEE SHEETS C-07 AND C-08 FOR TOP OF CURB PROFILE.

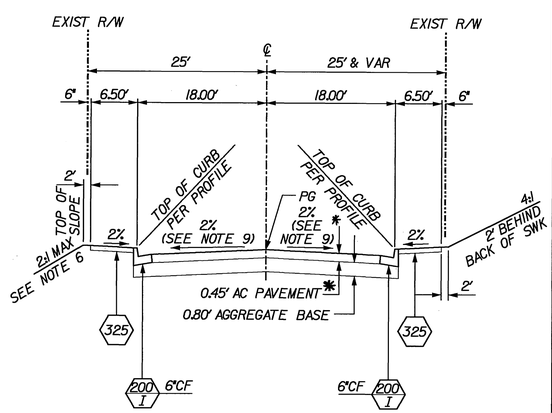

WILLIAM STREET

"W" 10+23 TO "W" 13+07

AS BUILT 1-20-10

PATTERSON & ASSOCIATES, INC. (CIVIL ENGINEERING CONSULTANTS) — 725 TOWN & COUNTRY ROAD, SUITE 300, ORANGE, CA 92868

DMJM HARRIS | AECOM — 999 Town & Country Road, Orange, CA 92868, T 714.567.2501 F 714.567.2441

REGISTERED PROFESSIONAL ENGINEER — MORTEZA GHANDEHARI — No. C042150 — EXP. 03/31/08 — CIVIL — STATE OF CALIFORNIA

MARK	REVISIONS	APPR.	DATE

DESIGNED BY PM DRAWN BY SR CHECKED BY JLP

CITY OF RIVERSIDE, CALIFORNIA
PUBLIC WORKS DEPARTMENT

APPROVED BY	BY	DATE
PRINCIPAL ENGINEER	[illegible]	12/18/06
CONST. CONTRACT ADMIN	[illegible]	12/18/06
STREET SERVICES	[illegible]	12/18/06
SURVEYOR	—	—
TRAFFIC DIVISION	[illegible]	12-18-06
PARKS DEPARTMENT	—	—

APPROVED BY [illegible] CITY ENGINEER
DATE 12/18/06

JURUPA AVENUE UNDERPASS
PHASE II CONSTRUCTION

TYPICAL SECTIONS

R-3634
C-01

SCALE: NOT TO SCALE

OCTOBER 9, 2006

10/7/06 1:24:08 PM J:\HA_PROJECTS\Jurupa\Drawings\c-01.slt

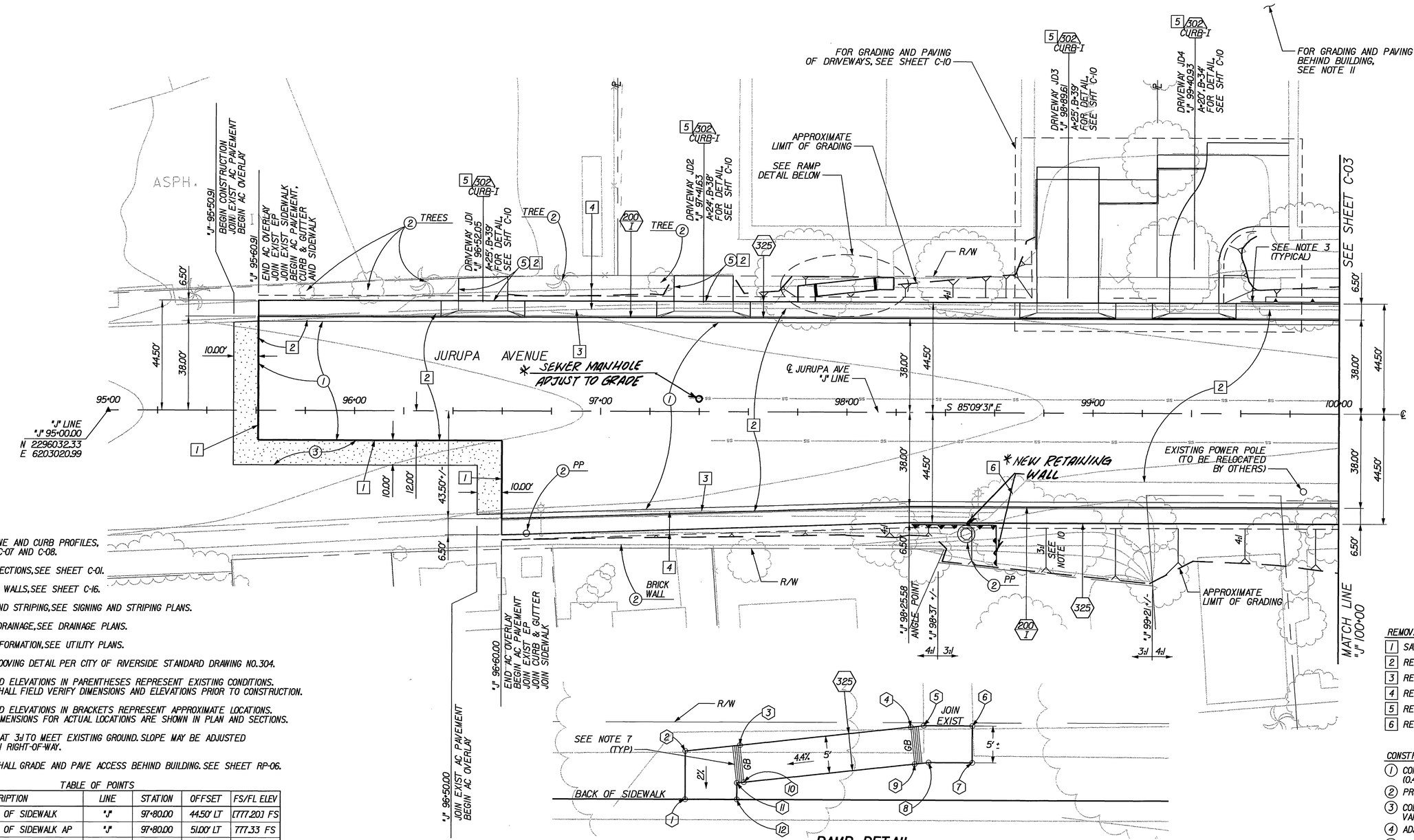

NOTES:

1. FOR CENTERLINE AND CURB PROFILES, SEE SHEETS C-07 AND C-08.
2. FOR TYPICAL SECTIONS, SEE SHEET C-01.
3. FOR RETAINING WALLS, SEE SHEET C-16.
4. FOR SIGNING AND STRIPING, SEE SIGNING AND STRIPING PLANS.
5. FOR STREET DRAINAGE, SEE DRAINAGE PLANS.
6. FOR UTILITY INFORMATION, SEE UTILITY PLANS.
7. CONSTRUCT GROOVING DETAIL PER CITY OF RIVERSIDE STANDARD DRAWING NO. 304.
8. DIMENSIONS AND ELEVATIONS IN PARENTHESES REPRESENT EXISTING CONDITIONS. CONTRACTOR SHALL FIELD VERIFY DIMENSIONS AND ELEVATIONS PRIOR TO CONSTRUCTION.
9. DIMENSIONS AND ELEVATIONS IN BRACKETS REPRESENT APPROXIMATE LOCATIONS. CONTROLLING DIMENSIONS FOR ACTUAL LOCATIONS ARE SHOWN IN PLAN AND SECTIONS.
10. GRADE SLOPE AT 3:1 TO MEET EXISTING GROUND. SLOPE MAY BE ADJUSTED TO STAY WITHIN RIGHT-OF-WAY.
11. CONTRACTOR SHALL GRADE AND PAVE ACCESS BEHIND BUILDING. SEE SHEET RP-06.

TABLE OF POINTS

POINT	DESCRIPTION	LINE	STATION	OFFSET	FS/FL ELEV
1	EDGE OF SIDEWALK	"J"	97+80.00	44.50' LT	(777.20) FS
2	EDGE OF SIDEWALK AP	"J"	97+80.00	51.00' LT	777.33 FS
3	EDGE OF SIDEWALK GB	"J"	97+87.40	51.80' LT	777.24 FS
4	EDGE OF SIDEWALK GB	"J"	98+10.52	54.31' LT	778.26 FS
5	EDGE OF SIDEWALK	"J"	98+12.26	54.50' LT	(778.30) FS
6	EDGE OF SIDEWALK	"J"	98+18.85	54.50' LT	(778.30) FS
7	EDGE OF SIDEWALK AP	"J"	98+18.85	49.55' LT	778.25 FS
8	EDGE OF SIDEWALK AP	"J"	98+12.94	49.55' LT	778.20 FS
9	EDGE OF SIDEWALK GB	"J"	98+11.06	49.34' LT	778.16 FS
10	EDGE OF SIDEWALK GB	"J"	97+87.94	46.83' LT	777.14 FS
11	EDGE OF SIDEWALK AP	"J"	97+87.00	46.73' LT	777.12 FS
12	EDGE OF SIDEWALK	"J"	97+87.00	44.50' LT	(777.08) FS

REMOVAL NOTES:

1. SAWCUT LINE
2. REMOVE AC PAVEMENT
3. REMOVE CURB & GUTTER
4. REMOVE CONCRETE SIDEWALK
5. REMOVE DRIVEWAY
6. REMOVE CURB

CONSTRUCTION NOTES:

1. CONSTRUCT AC PAVEMENT (0.45' AC ON 0.80' CAB, ON 1.10' SUBBASE)
2. PROTECT IN PLACE
3. COLD PLANE MIN 0.10' AND CONSTRUCT VARIABLE THICKNESS AC OVERLAY
4. ADJUST TO GRADE
5. CONSTRUCT DENSELY GRADED AC PAVEMENT (0.33' THICK)

20' 10' 0 20' 40'
GRAPHIC SCALE: 1" = 20'

*AS BUILT 1-20-10

PATTERSON & ASSOCIATES, INC. CIVIL ENGINEERING CONSULTANTS
725 TOWN & COUNTRY ROAD SUITE 300 ORANGE, CA 92868
DMJM HARRIS | AECOM
999 Town & Country Road Orange, CA 92868 T 714.567.2501 F 714.567.2441

REGISTERED PROFESSIONAL ENGINEER MORTEZA GHANDEHARI No. C042150 EXP. 03/31/08 CIVIL STATE OF CALIFORNIA

MARK	REVISIONS	APPR.	DATE

DESIGNED BY PM DRAWN BY SR CHECKED BY JLP

CITY OF RIVERSIDE, CALIFORNIA
PUBLIC WORKS DEPARTMENT

APPROVED BY	BY	DATE
PRINCIPAL ENGINEER		
CONST. CONTRACT ADMIN		
STREET SERVICES		
SURVEYOR		
TRAFFIC DIVISION		
PARKS DEPARTMENT		

APPROVED BY
CITY ENGINEER
DATE 12/8/06

JURUPA AVENUE UNDERPASS
PHASE II CONSTRUCTION

PLAN - JURUPA AVENUE
"J" 95+00 TO "J" 100+00

SCALE: 1" = 20'

R-3634
C-02

OCTOBER 9, 2006

10/7/06 1:26:29 PM J:\HP\PROJECTS\Jurupa\Drawings\c-02.sht

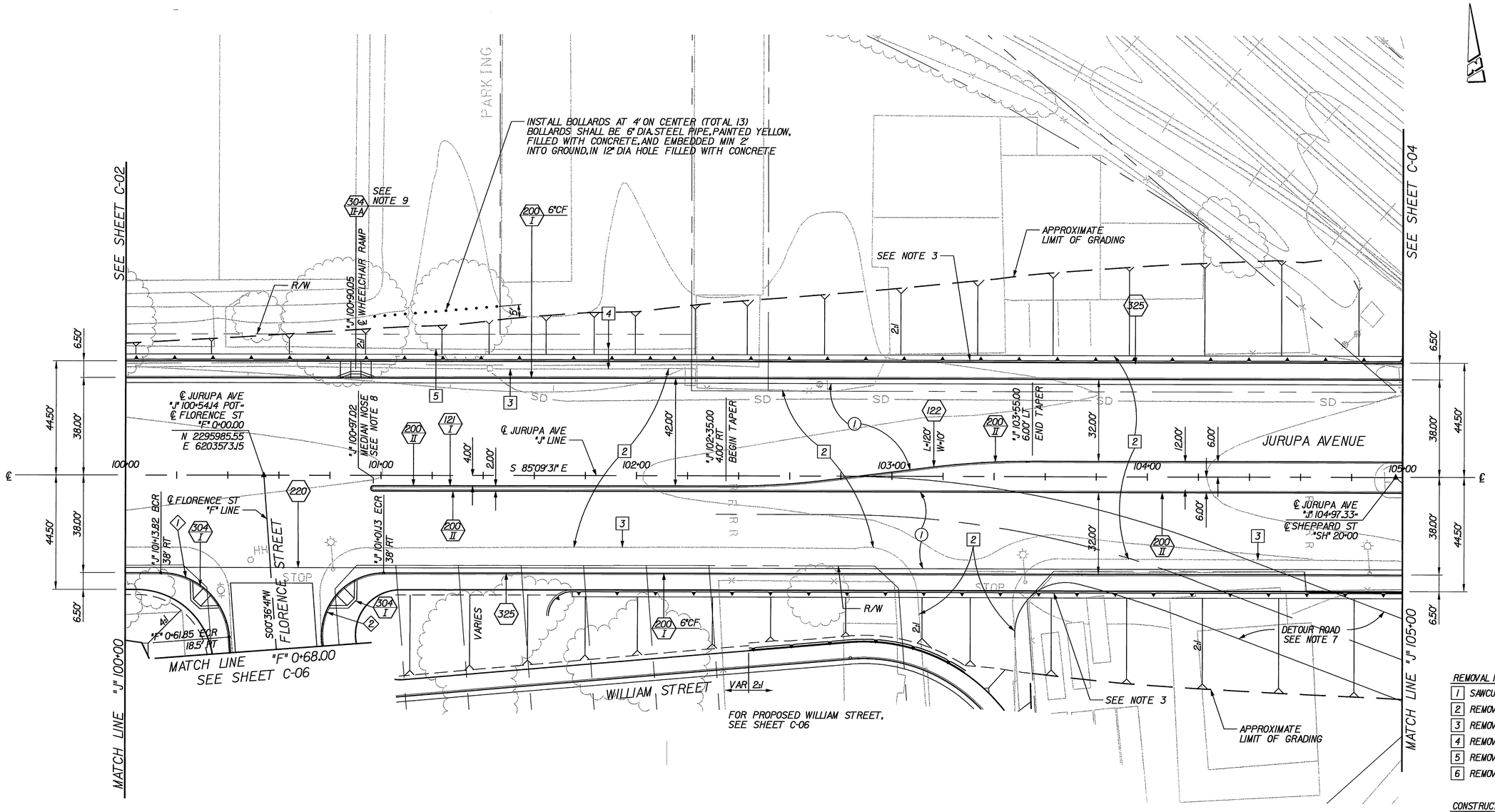

REMOVAL NOTES:

1. SAWCUT LINE
2. REMOVE AC PAVEMENT
3. REMOVE CURB & GUTTER
4. REMOVE CONCRETE SIDEWALK
5. REMOVE DRIVEWAY
6. REMOVE CURB

CONSTRUCTION NOTES:

1. CONSTRUCT AC PAVEMENT (0.45' AC ON 0.80' CAB, ON 1.10' SUBBASE)
2. PROTECT IN PLACE
3. COLD PLANE MIN 0.10' AND CONSTRUCT VARIABLE THICKNESS AC OVERLAY
4. ADJUST TO GRADE

NOTES:

1. FOR CENTERLINE AND CURB PROFILES, SEE SHEETS C-07 AND C-08.
2. FOR TYPICAL SECTIONS, SEE SHEET C-01.
3. FOR RETAINING WALLS, SEE SHEET C-16.
4. FOR SIGNING AND STRIPING, SEE SIGNING AND STRIPING PLANS.
5. FOR STREET DRAINAGE, SEE DRAINAGE PLANS.
6. FOR UTILITY INFORMATION, SEE UTILITY PLANS.
7. FOR DETOUR ROAD PLANS, SEE SHEETS DE-01 AND DE-02.
8. SEE MEDIAN NOSE DETAIL ON SHEET C-15.
9. PROFILE OF RETAINING WALL SHALL NOT FOLLOW BACK OF SIDEWALK AT WHEELCHAIR RAMPS. SEET NOTE 11 ON SHEET C-01.

CURVE DATA

CURVE	R	△	L	T
1	27.00'	85°46'12"	40.42'	25.08'
2	24.28'	184°50'29"	78.31'	—

GRAPHIC SCALE: 20' 10' 0 20' 40' — 1" = 20'

AS BUILT 1-20-10

PATTERSON & ASSOCIATES, INC. CIVIL ENGINEERING CONSULTANTS
725 TOWN & COUNTRY ROAD SUITE 300 ORANGE, CA 92868
DMJM HARRIS | AECOM
999 Town & Country Road Orange, CA 92868 T 714.567.2501 F 714.567.2441

REGISTERED PROFESSIONAL ENGINEER MORTEZA GHANDCHARY No. C042150 EXP. 06/31/08 CIVIL STATE OF CALIFORNIA

MARK	REVISIONS	APPR.	DATE

DESIGNED BY PM DRAWN BY SR CHECKED BY JLP

CITY OF RIVERSIDE, CALIFORNIA
PUBLIC WORKS DEPARTMENT

APPROVED BY	BY	DATE
PRINCIPAL ENGINEER		
CONST. CONTRACT ADMIN		
STREET SERVICES		
SURVEYOR	—	—
TRAFFIC DIVISION		
PARKS DEPARTMENT	—	—

APPROVED BY _____ CITY ENGINEER
DATE 12/18/06

JURUPA AVENUE UNDERPASS
PHASE II CONSTRUCTION

PLAN - JURUPA AVENUE
"J" 100+00 TO "J" 105+00

SCALE: 1" = 20'

R-3634
C-03

OCTOBER 9, 2006

10/7/06 1:26:48 PM J:\N\PROJECTS\Jurupa\Drawings\c-03.sht

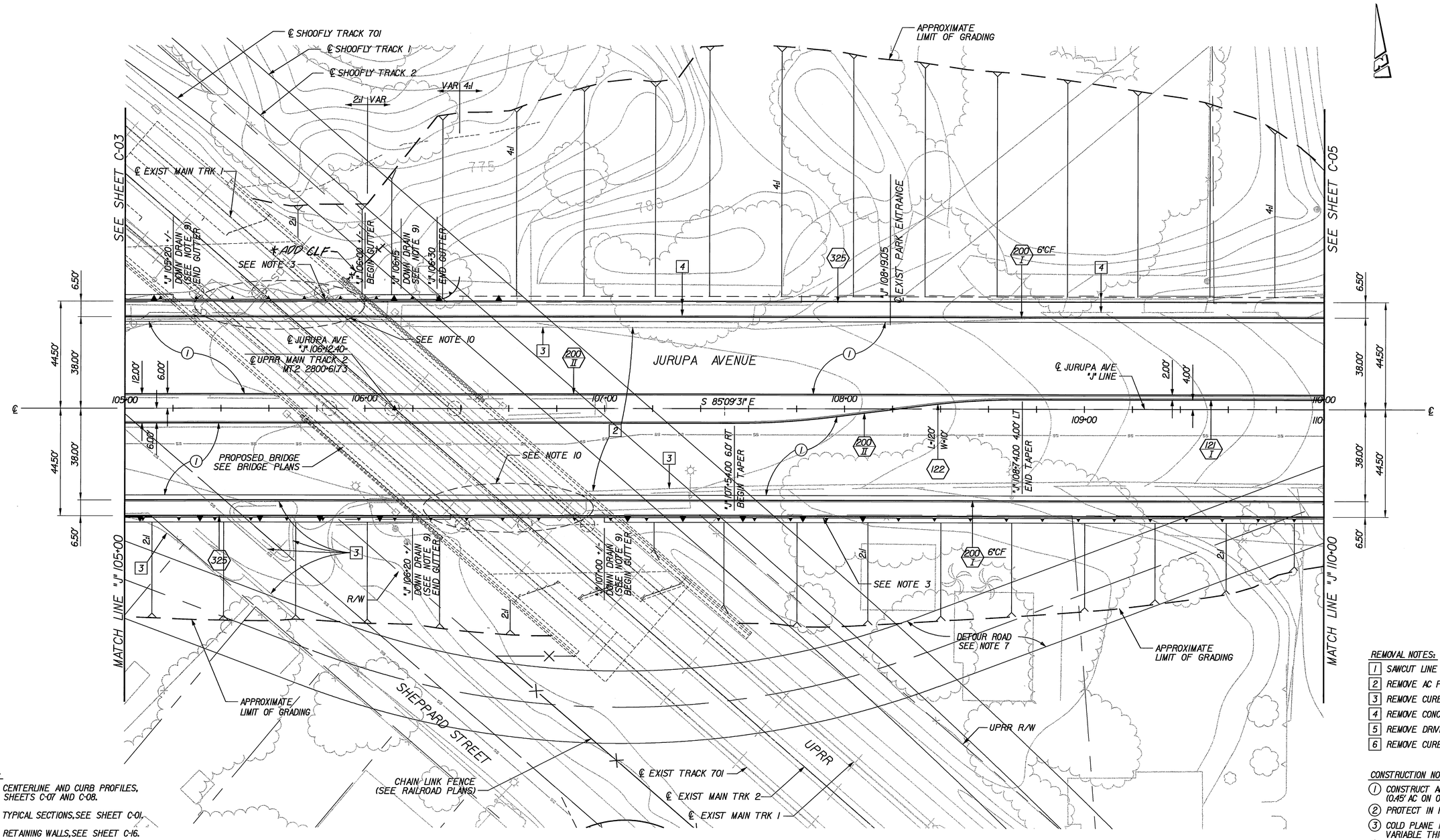

REMOVAL NOTES:

1. SAWCUT LINE
2. REMOVE AC PAVEMENT
3. REMOVE CURB & GUTTER
4. REMOVE CONCRETE SIDEWALK
5. REMOVE DRIVEWAY
6. REMOVE CURB

CONSTRUCTION NOTES:

1. CONSTRUCT AC PAVEMENT (0.45' AC ON 0.80' CAB, ON 1.0' SUBBASE)
2. PROTECT IN PLACE
3. COLD PLANE MIN 0.10' AND CONSTRUCT VARIABLE THICKNESS AC OVERLAY
4. ADJUST TO GRADE

NOTES:

1. FOR CENTERLINE AND CURB PROFILES, SEE SHEETS C-07 AND C-08.
2. FOR TYPICAL SECTIONS, SEE SHEET C-01.
3. FOR RETAINING WALLS, SEE SHEET C-16.
4. FOR SIGNING AND STRIPING, SEE SIGNING AND STRIPING PLANS.
5. FOR STREET DRAINAGE, SEE DRAINAGE PLANS.
6. FOR UTILITY INFORMATION, SEE UTILITY PLANS.
7. FOR DETOUR ROAD PLANS, SEE SHEETS DE-01 AND DE-02.
8. EXISTING CROSSING PANELS, CROSSING EQUIPMENT, AND SIGNAL SHELTER TO BE REMOVED BY OTHERS.
9. STATION IS APPROXIMATE. LIMIT OF GUTTER SHALL JOIN LIMITS OF SLOPE PAVING. SEE BRIDGE PLANS. CONSTRUCT DOWN DRAIN PER DETAIL ON SHEET C-15. WHERE DOWN DRAIN OCCURS AT THE BEGINNING OR END OF A GUTTER, OFFSET THE LOCATION OF THE DRAIN BY 1 FOOT.
10. WHERE BRIDGE COLUMNS CONFLICT WITH RETAINING WALL FOOTING SEE SHEET C-15.

20' 10' 0 20' 40'
GRAPHIC SCALE: 1" = 20'

*AS BUILT 1-20-10

RIVERSIDE COUNTY REGIONAL PARK AND OPEN-SPACE DISTRICT
APPROVED BY PAUL FRANDSEN
GENERAL MANAGER
DATE 11/14/06

PATTERSON & ASSOCIATES, INC. CIVIL ENGINEERING CONSULTANTS
725 TOWN & COUNTRY ROAD SUITE 300 ORANGE, CA 92868
DMJM HARRIS | AECOM
999 Town & Country Road Orange, CA 92868
T 714.567.2501 F 714.567.2441

REGISTERED PROFESSIONAL ENGINEER MORTEZA GHANDEHARI No. C042150 EXP. 03/31/08 CIVIL STATE OF CALIFORNIA

MARK	REVISIONS	APPR.	DATE

DESIGNED BY PM DRAWN BY SR CHECKED BY JLP

CITY OF RIVERSIDE, CALIFORNIA
PUBLIC WORKS DEPARTMENT

APPROVED BY	BY	DATE
PRINCIPAL ENGINEER		
CONST. CONTRACT ADMIN		
STREET SERVICES		
SURVEYOR		
TRAFFIC DIVISION		
PARKS DEPARTMENT		

APPROVED BY
CITY ENGINEER
DATE 12/5/06

JURUPA AVENUE UNDERPASS PHASE II CONSTRUCTION

PLAN - JURUPA AVENUE "J" 105+00 TO "J" 110+00

SCALE: 1" = 20'

R-3634
C-04

OCTOBER 9, 2006

10/7/06 1:33:45 PM J:\H\PROJECTS\Jurupa\Drawings\c-04.sht

NOTES:

1. FOR CENTERLINE AND CURB PROFILES, SEE SHEETS C-07 AND C-08.
2. FOR TYPICAL SECTIONS, SEE SHEET C-01.
3. FOR RETAINING WALLS, SEE SHEET C-16.
4. FOR SIGNING AND STRIPING, SEE SIGNING AND STRIPING PLANS.
5. FOR STREET DRAINAGE, SEE DRAINAGE PLANS.
6. FOR UTILITY INFORMATION, SEE UTILITY PLANS.
7. FOR DETOUR ROAD PLANS, SEE SHEETS DE-01 AND DE-02.
8. FOR PARK ENTRANCE ROADWAY, SEE SHEET C-20.
9. MATCH EXISTING SIDEWALK DIMENSIONS.
10. SEE MEDIAN NOSE DETAIL ON SHEET C-15.
11. THE CONTRACTOR SHALL RELOCATE THE 6-INCH FIRE SERVICE AT THE CHURCH IN ACCORDANCE WITH STANDARD DRAWING CWD-617 AS DIRECTED BY THE CITY OF RIVERSIDE, WATER DIVISION, BACKFLOW TECHNICIAN (951) 351-6320.

REMOVAL NOTES:

1. SAWCUT LINE
2. REMOVE AC PAVEMENT
3. REMOVE CURB & GUTTER
4. REMOVE CONCRETE SIDEWALK
5. REMOVE DRIVEWAY
6. REMOVE CURB

CONSTRUCTION NOTES:

1. CONSTRUCT AC PAVEMENT (0.45' AC ON 0.80' CAB, ON 1.10' SUBBASE)
2. PROTECT IN PLACE
3. COLD PLANE MIN 0.10' AND CONSTRUCT VARIABLE THICKNESS AC OVERLAY
4. ADJUST TO GRADE

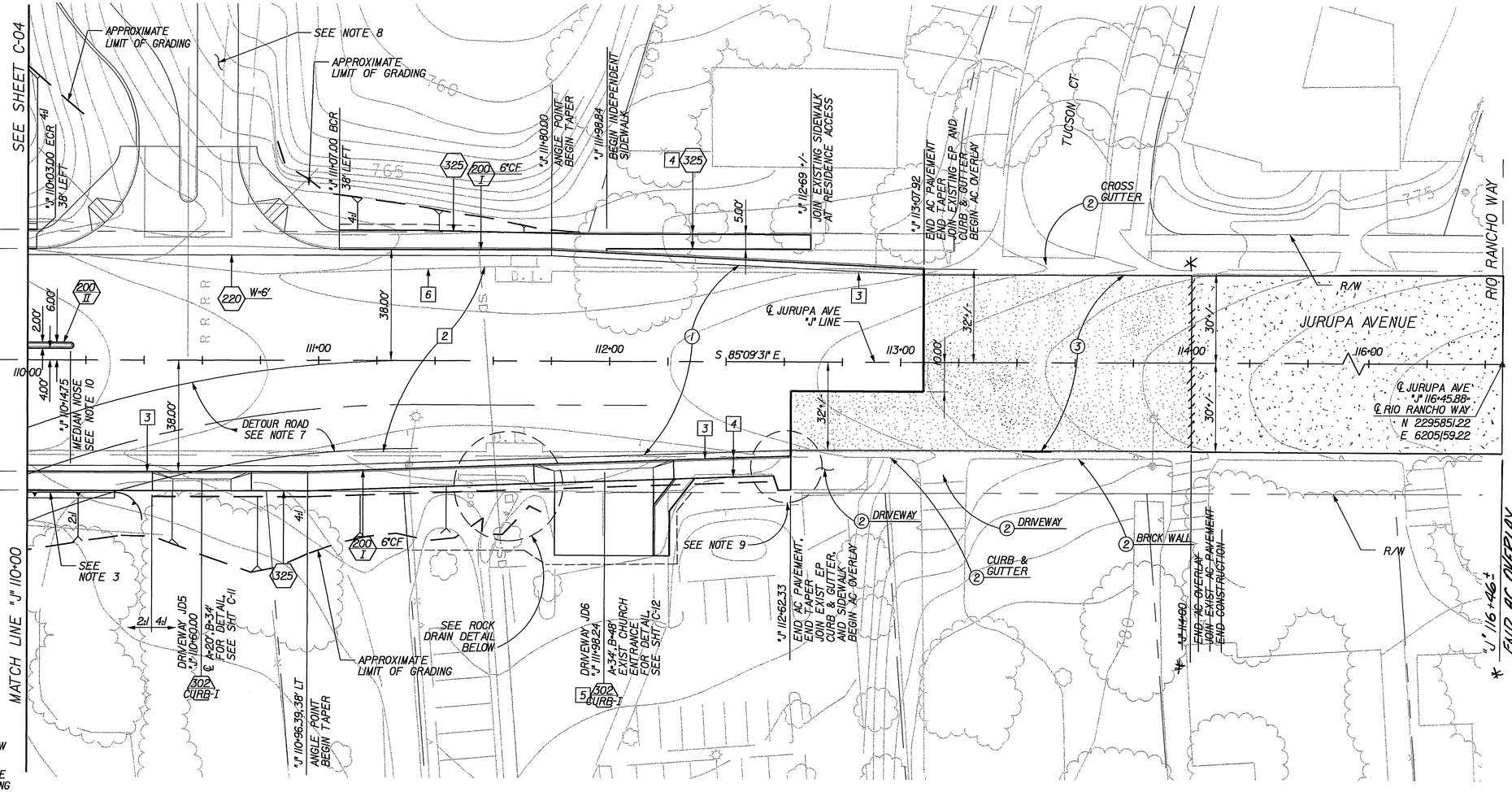

ROCK DRAIN DETAIL

20' 10' 0 20' 40'
GRAPHIC SCALE: 1" = 20'

* AS BUILT 1-20-10

RIVERSIDE COUNTY REGIONAL PARK AND OPEN-SPACE DISTRICT
APPROVED BY PAUL FRANDSEN
GENERAL MANAGER
DATE 11/14/06

PATTERSON & ASSOCIATES, INC. (DBA: PATTERSON ENGINEERING)
725 TOWN & COUNTRY ROAD SUITE 300 ORANGE, CA 92868
DMJM HARRIS | AECOM
999 Town & Country Road Orange, CA 92868
T 714.567.2501 F 714.567.2441

REGISTERED PROFESSIONAL ENGINEER MORTEZA GHANDEHARI No. C042150 EXP. 03/31/08 CIVIL STATE OF CALIFORNIA

MARK	REVISIONS	APPR.	DATE

DESIGNED BY PM DRAWN BY SR CHECKED BY JLP

CITY OF RIVERSIDE, CALIFORNIA
PUBLIC WORKS DEPARTMENT

APPROVED BY	BY	DATE
PRINCIPAL ENGINEER	[illegible]	11/7/06
CONST. CONTRACT ADMIN	[illegible]	11/2/06
STREET SERVICES	[illegible]	11/6/06
SURVEYOR	[illegible]	[illegible]
TRAFFIC DIVISION	[illegible]	11-6-06
PARKS DEPARTMENT	—	—

APPROVED BY [signature] CITY ENGINEER
DATE 11/13/06

JURUPA AVENUE UNDERPASS PHASE II CONSTRUCTION

PLAN - JURUPA AVENUE "J" 110+00 TO "J" 114+00

SCALE: 1" = 20'

R-3634
C-05

OCTOBER 9, 2006

10/7/06 1:36:43 PM J:\H\PROJECTS\Jurupa\Drawings\c-05.sht

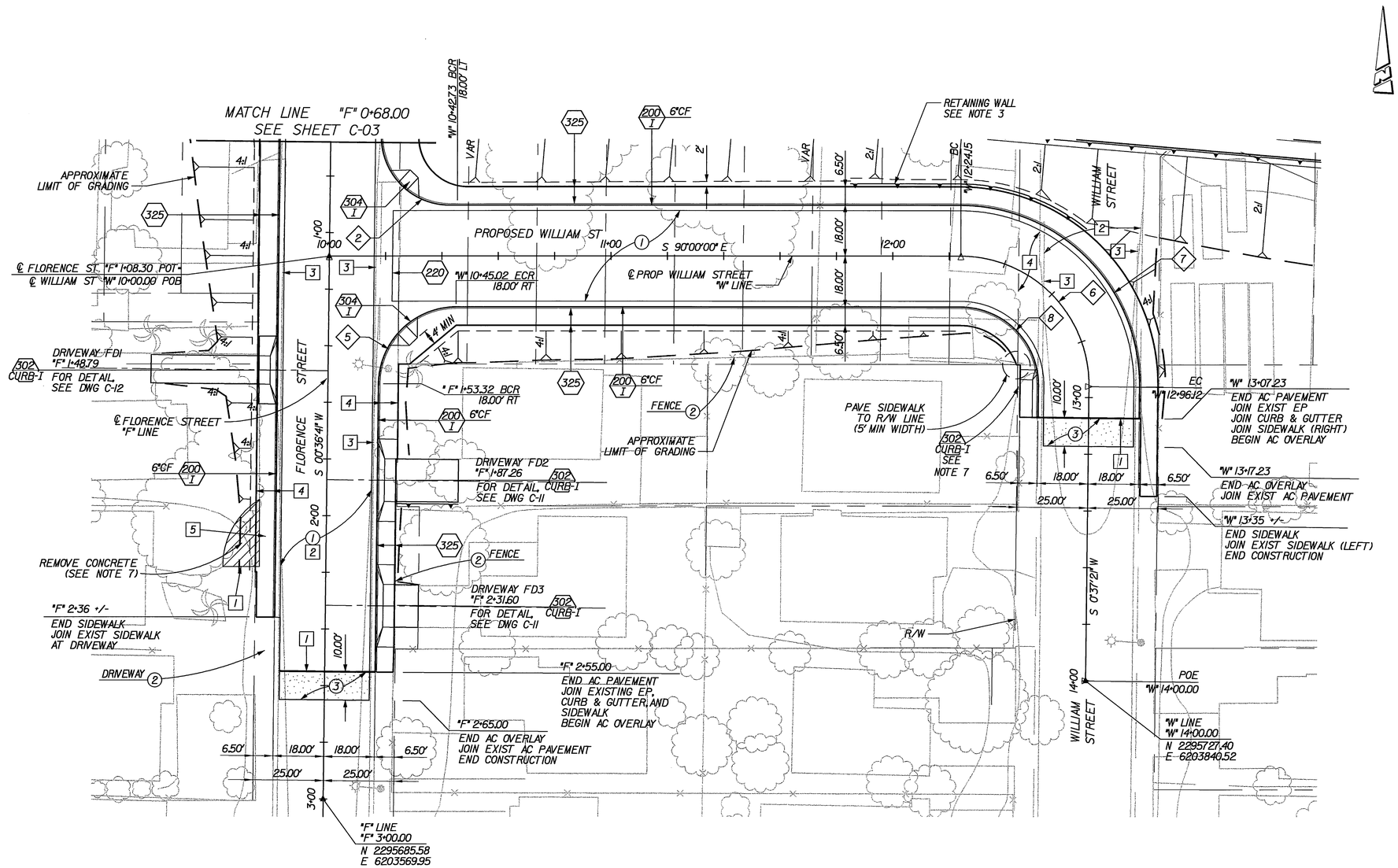

NOTES:

1. FOR CENTERLINE AND CURB PROFILES, SEE SHEET C-09.
2. FOR TYPICAL SECTIONS, SEE SHEET C-01.
3. FOR RETAINING WALLS, SEE SHEET C-16
4. FOR SIGNING AND STRIPING, SEE SIGNING AND STRIPING PLANS.
5. FOR STREET DRAINAGE, SEE DRAINAGE PLANS.
6. REMOVE AND RECONSTRUCT PORTION OF DRIVEWAY WITHIN CONSTRUCTION LIMITS. JOIN EXISTING DRIVEWAY.
7. REMOVE EXISTING CONCRETE DRIVEWAY ON PRIVATE PROPERTY AS SHOWN. REMOVE CONCRETE AT CORNER OF WALKWAY ("F" 2+18 +/-) PERPENDICULAR TO SIDEWALK. PROTECT EXISTING WATER METER IN PLACE. RELOCATE MAILBOX TO SIDEWALK.

CURVE DATA

CURVE	R	Δ	L	T
2	24.28'	184°50'29"	78.31'	—
5	27.50'	89°23'19"	42.90'	27.21'
6	45.50'	90°37'21"	71.97'	46.00'
7	63.50'	90°37'21"	100.44'	64.19'
8	27.50'	90°37'21"	43.50'	27.80'

REMOVAL NOTES:

1. SAWCUT LINE
2. REMOVE AC PAVEMENT
3. REMOVE CURB & GUTTER
4. REMOVE CONCRETE SIDEWALK
5. REMOVE DRIVEWAY
6. REMOVE CURB

CONSTRUCTION NOTES:

1. CONSTRUCT AC PAVEMENT (0.45' AC ON 0.80' CAB)
2. PROTECT IN PLACE
3. COLD PLANE MIN 0.10' AND CONSTRUCT VARIABLE THICKNESS AC OVERLAY
4. ADJUST TO GRADE

20' 10' 0 20' 40'
GRAPHIC SCALE: 1" = 20'

AS BUILT 1-20-10

PATTERSON & ASSOCIATES, INC. CIVIL ENGINEERING ENVIRONMENTAL PLANNING
725 TOWN & COUNTRY ROAD SUITE 300 ORANGE, CA 92868
DMJM HARRIS | AECOM
999 Town & Country Road Orange, CA 92868 T 714.567.2501 F 714.567.2441

REGISTERED PROFESSIONAL ENGINEER MONTEA GHANDEHARI No. C042150 EXP. 03/31/08 CIVIL STATE OF CALIFORNIA

MARK	REVISIONS	APPR.	DATE

DESIGNED BY PM DRAWN BY SR CHECKED BY JLP

CITY OF RIVERSIDE, CALIFORNIA
PUBLIC WORKS DEPARTMENT

APPROVED BY	BY	DATE
PRINCIPAL ENGINEER	[illegible]	12/11/06
CONST. CONTRACT ADMIN	[illegible]	12/11/06
STREET SERVICES	[illegible]	12/12/06
SURVEYOR	—	—
TRAFFIC DIVISION	[illegible]	12-9-06
PARKS DEPARTMENT	—	—

APPROVED BY _____ CITY ENGINEER
DATE 12/8/06

JURUPA AVENUE UNDERPASS
PHASE II CONSTRUCTION

PLAN
FLORENCE & WILLIAM STREETS

SCALE: 1" = 20'

R-3634
C-06

OCTOBER 9, 2006

10/7/06 1:36:59 PM J:\H\PROJECTS\Jurupa\Drawings\c-06.sht

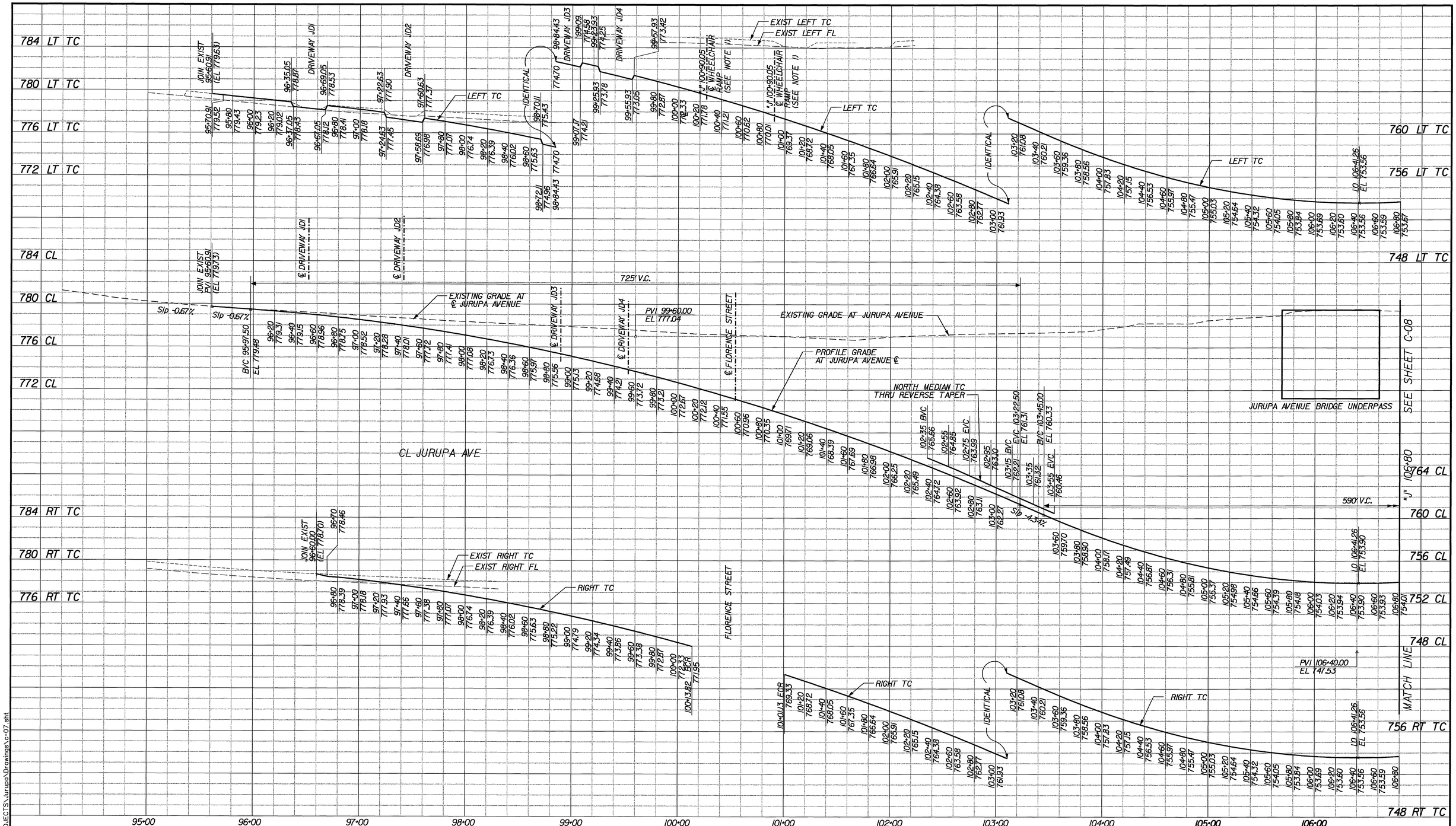

NOTES:

1. WHEELCHAIR RAMPS NOT SHOWN. CONTRACTOR SHALL ADJUST TOP OF CURB ELEVATIONS AT WHEELCHAIR RAMPS TO CONFORM TO WHEELCHAIR RAMP REQUIREMENTS.

AS BUILT 1-20-10

PATTERSON & ASSOCIATES, INC. CIVIL ENGINEERING CONSULTANTS
725 TOWN & COUNTRY ROAD SUITE 300 ORANGE, CA 92868

DMJM HARRIS | AECOM
999 Town & Country Road Orange, CA 92868 T 714.567.2501 F 714.567.2441

REGISTERED PROFESSIONAL ENGINEER MORTEZA GHANDEHARI No. C042150 EXP. 03/31/08 CIVIL STATE OF CALIFORNIA

MARK	REVISIONS	APPR.	DATE

DESIGNED BY PM DRAWN BY SR CHECKED BY JLP

CITY OF RIVERSIDE, CALIFORNIA
PUBLIC WORKS DEPARTMENT

	APPROVED BY	DATE
PRINCIPAL ENGINEER	[illegible]	12/18/06
CONST. CONTRACT ADMIN	[illegible]	12/18/06
STREET SERVICES	[illegible]	12/6/06
SURVEYOR	—	—
TRAFFIC DIVISION	[illegible]	12-8-06
PARKS DEPARTMENT	—	—

APPROVED BY [signature]
CITY ENGINEER
DATE 12/18/06

JURUPA AVENUE UNDERPASS
PHASE II CONSTRUCTION

PROFILE - JURUPA AVENUE
"J" 95+60 TO "J" 106+80

HORIZ. SCALE: 1" = 40' VERT. SCALE: 1" = 4'

R-3634
C-07

OCTOBER 9, 2006

10/7/06 1:37:15 PM J:\HA\PROJECTS\Jurupa\Drawings\c-07.sht

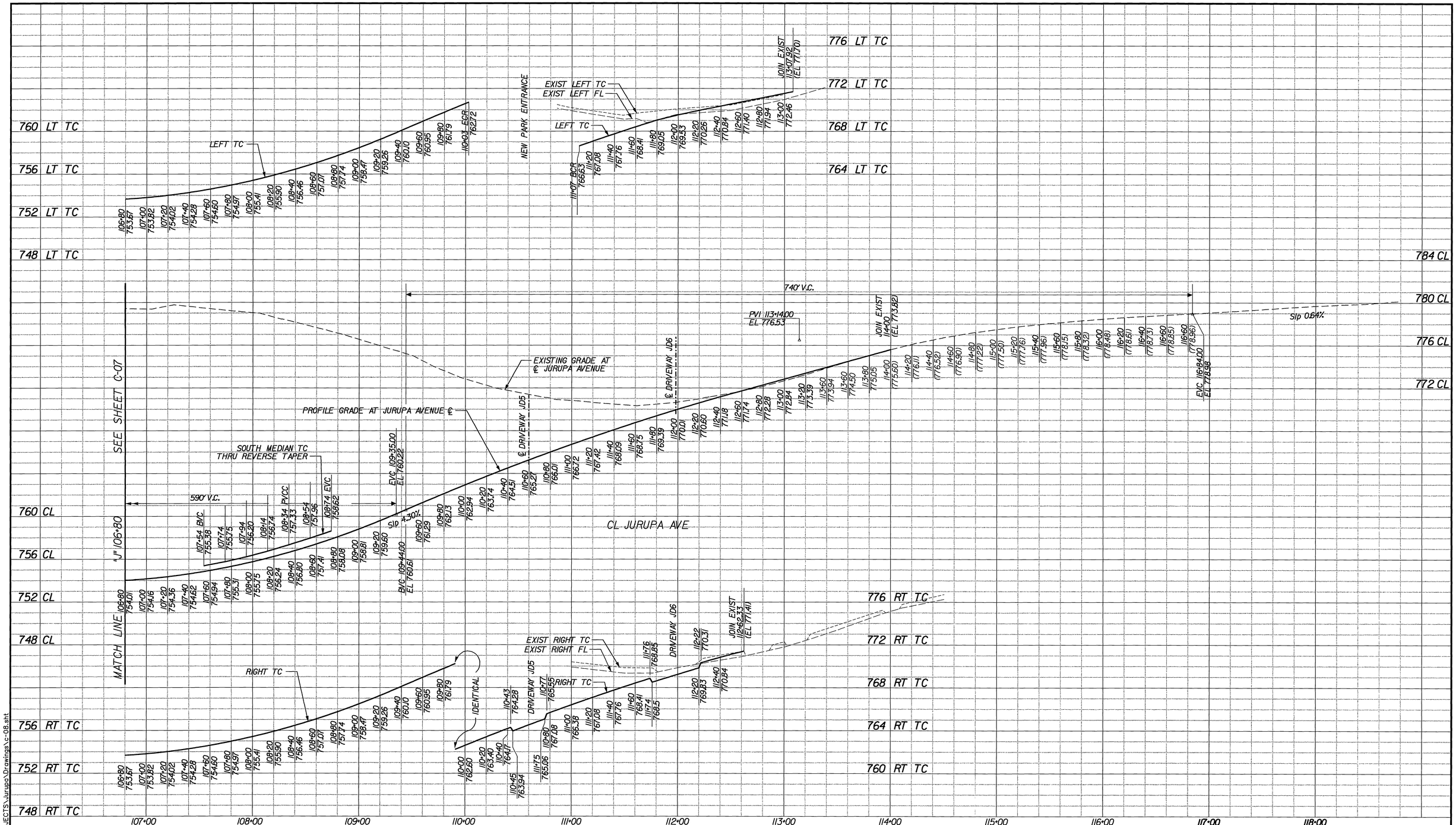

AS BUILT 1-20-10

PATTERSON & ASSOCIATES, INC. CIVIL TRANSPORTATION ENGINEERING
725 TOWN & COUNTRY ROAD SUITE 300 ORANGE, CA 92868

DMJM HARRIS | AECOM
999 Town & Country Road Orange, CA 92868 T 714.567.2501 F 714.567.2441

REGISTERED PROFESSIONAL ENGINEER MORTEZA GHANDEHARI No. C042150 EXP. 03/31/08 CIVIL STATE OF CALIFORNIA

MARK	REVISIONS	APPR.	DATE

DESIGNED BY PM DRAWN BY SR CHECKED BY JLP

CITY OF RIVERSIDE, CALIFORNIA
PUBLIC WORKS DEPARTMENT

APPROVED BY	BY	DATE
PRINCIPAL ENGINEER	PM	11/1/06
CONST. CONTRACT ADMIN	[illegible]	10/18/06
STREET SERVICES	[illegible]	11/6/06
SURVEYOR		
TRAFFIC DIVISION	[illegible]	12-8-06
PARKS DEPARTMENT	—	—

APPROVED BY [signature] CITY ENGINEER
DATE 12/8/06

JURUPA AVENUE UNDERPASS
PHASE II CONSTRUCTION

PROFILE - JURUPA AVENUE
"J" 106+80 TO "J" 114+00

HORIZ. SCALE: 1" = 40' VERT. SCALE: 1" = 4'

R-3634
C-08

OCTOBER 9, 2006

10/7/06 1:37:28 PM J:\H\PROJECTS\Jurupa\Drawings\c-08.sht

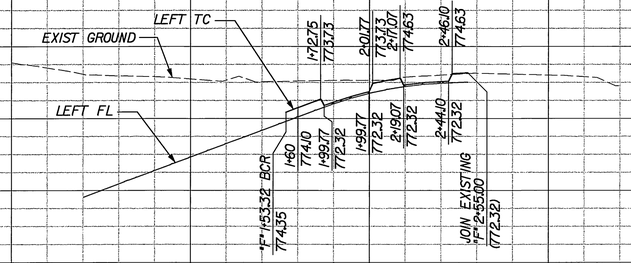

FLORENCE STREET
LEFT CURB PROFILE

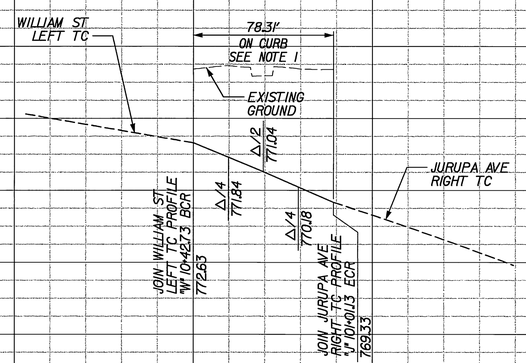

WILLIAM ST / FLORENCE ST / JURUPA AVE
CURB RETURN PROFILE

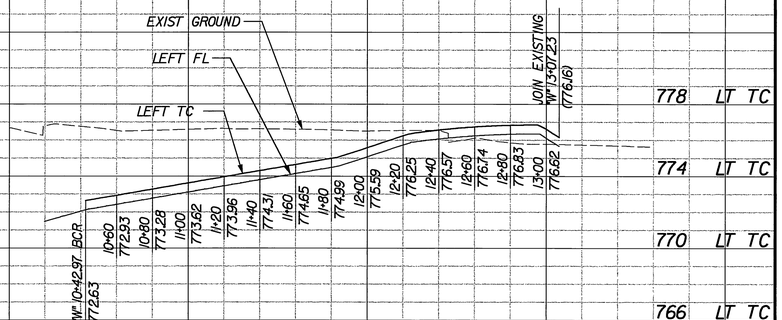

WILLIAM STREET
LEFT CURB PROFILE

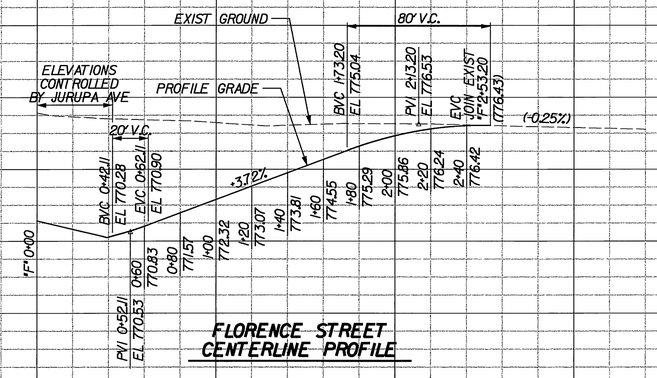

FLORENCE STREET
CENTERLINE PROFILE

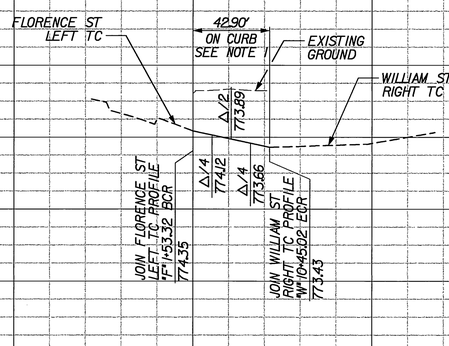

FLORENCE ST / WILLIAM ST
SOUTHEAST CURB RETURN PROFILE

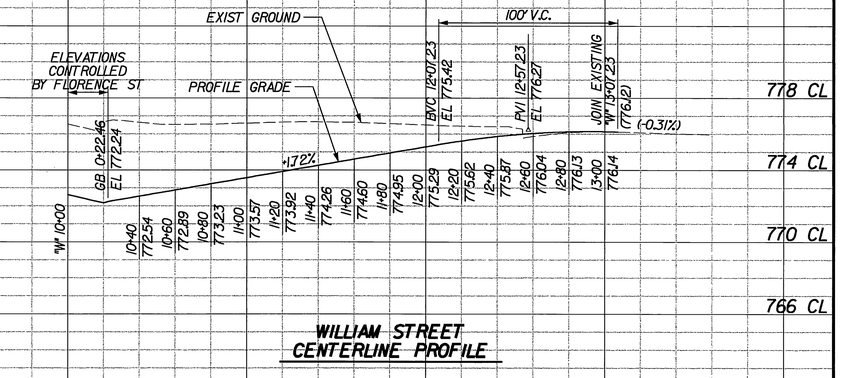

WILLIAM STREET
CENTERLINE PROFILE

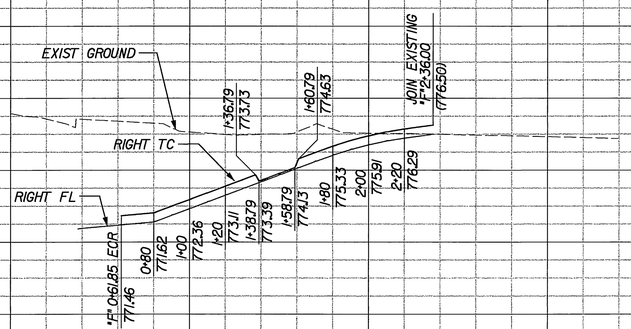

FLORENCE STREET
RIGHT CURB PROFILE

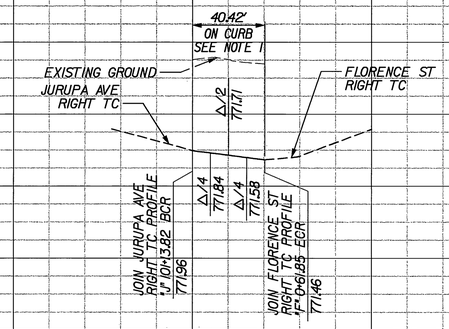

JURUPA AVE / FLORENCE ST
SOUTHWEST CURB RETURN PROFILE

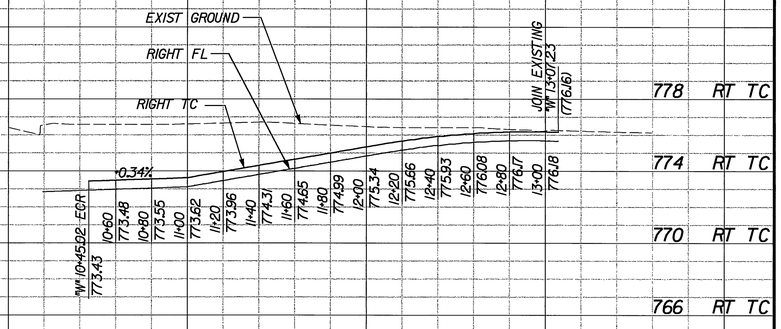

WILLIAM STREET
RIGHT CURB PROFILE

0+00 1+00 2+00 3+00 10+00 11+00 12+00 13+00

NOTES:

1. WHEELCHAIR RAMPS NOT SHOWN. CONTRACTOR SHALL ADJUST TOP OF CURB ELEVATIONS AT WHEELCHAIR RAMPS TO CONFORM TO WHEELCHAIR RAMP REQUIREMENTS.

AS BUILT 1-20-10

PATTERSON & ASSOCIATES, INC.
CIVIL ENGINEERING CONSULTANTS
725 TOWN & COUNTRY ROAD
SUITE 300
ORANGE, CA 92868

DMJM HARRIS | AECOM
999 Town & Country Road
Orange, CA 92868
T 714.567.2501 F 714.567.2441

REGISTERED PROFESSIONAL ENGINEER
MORTEZA GHANDEHARI
No. C042150
EXP. 03/31/08
CIVIL
STATE OF CALIFORNIA

MARK	REVISIONS	APPR.	DATE

DESIGNED BY PM DRAWN BY SR CHECKED BY JLP

CITY OF RIVERSIDE, CALIFORNIA
PUBLIC WORKS DEPARTMENT

APPROVED BY	BY	DATE
PRINCIPAL ENGINEER	FOR	11/7/06
CONST. CONTRACT ADMIN	BK	10/26/06
STREET SERVICES	WA	10/26/06
SURVEYOR	—	—
TRAFFIC DIVISION	FOR	12-9-06
PARKS DEPARTMENT	—	—

APPROVED BY _____ CITY ENGINEER
DATE 11/8/06

JURUPA AVENUE UNDERPASS
PHASE II CONSTRUCTION

PROFILE
FLORENCE AND WILLIAM STREETS

HORIZ. SCALE: 1" = 40' VERT. SCALE: 1" = 4'

R-3634
C-09

OCTOBER 9, 2006

10/7/06 1:37:43 PM J:\H\PROJECTS\Jurupa\Drawings\c-09.sht

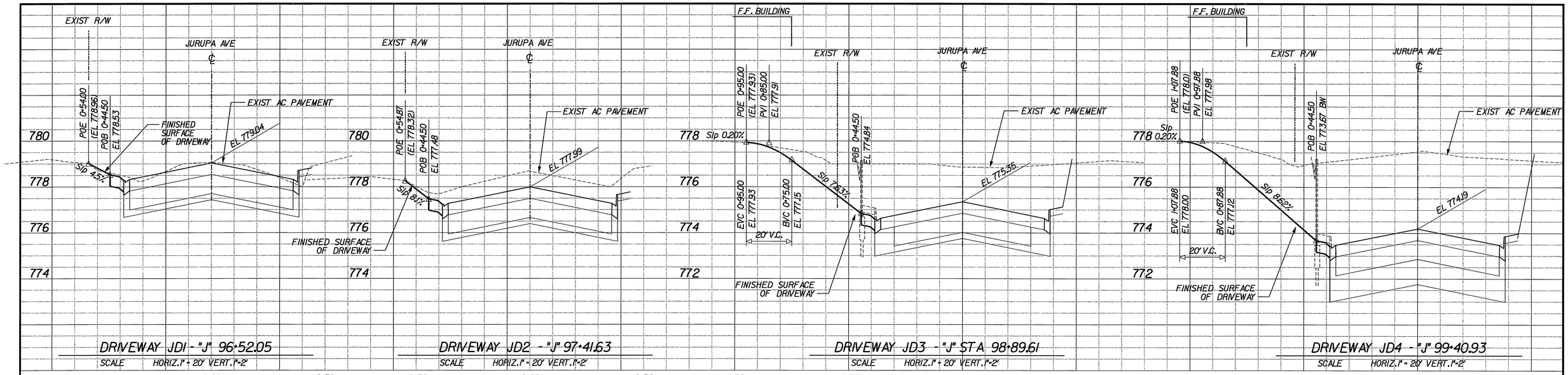

TABLE OF POINTS

POINT	DESCRIPTION	LINE	STATION	OFFSET	FS/FL ELEV	TC ELEV
1	BW AT DRIVEWAY	"JD3"	0+44.50	12.50' LT	[775.11] BW	
2	BW AT DRIVEWAY	"JD3"	0+44.50	0.00'	[774.84] BW	
3	BW AT DRIVEWAY	"JD3"	0+44.50	12.50' RT	[774.57] BW	
4	POT / FS BVC	"JD3"	0+74.44	12.75' LT	777.25 FS	778.00 TC
5	POT / FS POVC	"JD3"	0+84.44	12.75' LT	777.83 FS	778.00 TC
6	END CURB/FS EVC	"JD3"	0+94.44	12.75' LT	(778.00) FS	(778.00) TC
7	LIMIT OF SAWCUT	"JD3"	0+94.44	0.00'	(777.93) FS	
8	LIMIT OF SAWCUT	"JD3"	0+94.44	12.50' RT	(777.86) FS	
9	BEGIN CURB	"JD3"	0+84.85	12.50' RT	777.65 FS	778.15 TC
10	EP	"JD3"	0+74.44	12.50' RT	777.05 EP	
11	ANGLE POINT	"JD3"	0+85.14	36.16' RT	777.80 FS	778.30 TC
12	LIMIT OF SAWCUT	"JD3"	0+94.44	36.15' RT	777.80 FS	778.30 TC
13	LIMIT OF SAWCUT	"JD3"	0+99.00	36.14' RT	777.90 FS	778.40 TC
14	LIMIT OF SAWCUT	"JD3"	1+04.50	36.14' RT	(778.00) FS	(778.50) TC
15	BEGIN CURB / EP	"JD3"	0+61.20	12.75' LT	776.30 FS	776.30 TC
16	POT / TC GB	"JD3"	0+68.00	12.75' LT	776.79 FS	778.00 TC
20	BW AT DRIVEWAY	"JD4"	0+44.50	10.00' LT	[773.91] BW	
21	BW AT DRIVEWAY	"JD4"	0+44.50	0.00'	[773.67] BW	
22	BW AT DRIVEWAY	"JD4"	0+44.50	10.00' RT	[773.43] BW	
23	BC / EP	"JD4"	0+61.20	10.00' LT	775.25 EP	
24	PRC / EP	"JD4"	0+81.97	10.00' LT	777.20 EP	
25	POC / EP	"JD4"	0+84.54	10.00' LT	777.40 EP	
26	END CURB / POC	"JD4"	1+00.35	10.00' LT	777.80 FS	778.30 TC
27	LIMIT OF SAWCUT	"JD4"	1+07.88	10.00' LT	(778.00) FS	
28	LIMIT OF SAWCUT	"JD4"	1+07.88	0.00'	(778.00) FS	
29	LIMIT OF SAWCUT	"JD4"	1+07.88	23.21' RT	(778.20) FS	
30	EX SIDEWALK	"JD4"	0+91.84	30.09' RT	(778.20) FS	
31	POT / EP	"JD4"	0+89.08	21.30' RT	777.70 EP	
32	EC / EP	"JD4"	0+87.95	18.43' RT	777.40 EP	
33	BC / EP	"JD4"	0+60.69	10.00' RT	775.05 EP	
34	FS	"JD4"	0+96.62	12.43' RT	777.70 FS	

NOTES:

1. PROFILE STATIONING IS BASED DRIVEWAY STATION LINES AS INDICATED.
2. FOR LAYOUT OF DRIVEWAYS JD1, JD2, AND JD5, SEE SHEETS C-02 THRU C-05.
3. DIMENSIONS AND ELEVATIONS IN PARENTHESES REPRESENT EXISTING CONDITIONS. CONTRACTOR SHALL FIELD VERIFY DIMENSIONS AND ELEVATIONS PRIOR TO CONSTRUCTION.
4. DIMENSIONS AND ELEVATIONS IN BRACKETS REPRESENT APPROXIMATE LOCATIONS. CONTROLLING DIMENSIONS FOR ACTUAL LOCATIONS ARE SHOWN IN PLAN AND SECTIONS.

REMOVAL NOTES:

1. SAWCUT LINE
2. REMOVE AC PAVEMENT
3. REMOVE CURB & GUTTER
6. REMOVE CURB

CONSTRUCTION NOTES:

1. CONSTRUCT AC PAVEMENT (0.45' AC ON 0.80' CAB)
2. PROTECT IN PLACE
3. COLD PLANE MIN 0.10' AND CONSTRUCT VARIABLE THICKNESS AC OVERLAY
5. CONSTRUCT DENSELY GRADED AC PAVEMENT (0.33' THICK)

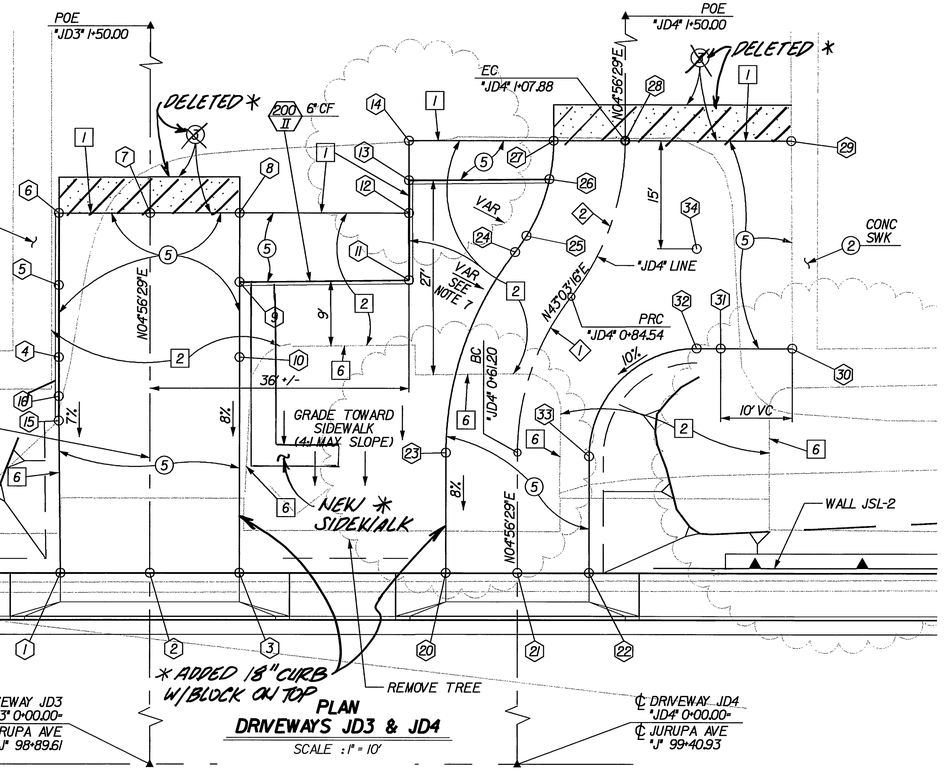

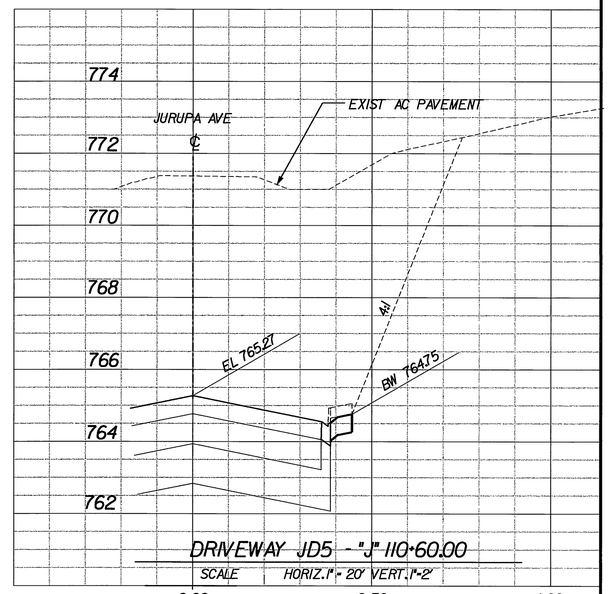

CURVE DATA

CURVE	R	△	L	T
1	35.00'	38°12'47"	23.34'	12.12'
2	35.00'	38°12'47"	23.34'	12.12'

10' 5' 0 10' 20'
HORIZ - GRAPHIC SCALE: 1" = 10'

20' 10' 0 20' 40'
HORIZ - GRAPHIC SCALE: 1" = 20'

2' 1' 0 2' 4'
VERT - GRAPHIC SCALE: 1" = 2'

* AS BUILT 1-20-10

PATTERSON & ASSOCIATES, INC. CIVIL ENGINEERING CONSULTING
725 TOWN & COUNTRY ROAD SUITE 300 ORANGE, CA 92868
DMJM HARRIS | AECOM
999 Town & Country Road Orange, CA 92868 T 714.567.2501 F 714.567.2441
REGISTERED PROFESSIONAL ENGINEER MORTEZA GHANDEHARI No. C042150 EXP. 03/31/08 CIVIL STATE OF CALIFORNIA

MARK	REVISIONS	APPR.	DATE

DESIGNED BY PM DRAWN BY SR CHECKED BY JLP

CITY OF RIVERSIDE, CALIFORNIA
PUBLIC WORKS DEPARTMENT

APPROVED BY	BY	DATE
PRINCIPAL ENGINEER		
CONST. CONTRACT ADMIN		
STREET SERVICES		
SURVEYOR		
TRAFFIC DIVISION		
PARKS DEPARTMENT		

APPROVED BY _____ CITY ENGINEER
DATE 12/18/06

JURUPA AVENUE UNDERPASS
PHASE II CONSTRUCTION

DRIVEWAY PROFILES AND PLAN - DRIVEWAYS JD3 & JD4

AS SHOWN

R-3634
C-10

OCTOBER 9, 2006

10/7/06 1:38:45 PM J:\R\PROJECTS\Jurupa\Drawings\c-10.sht

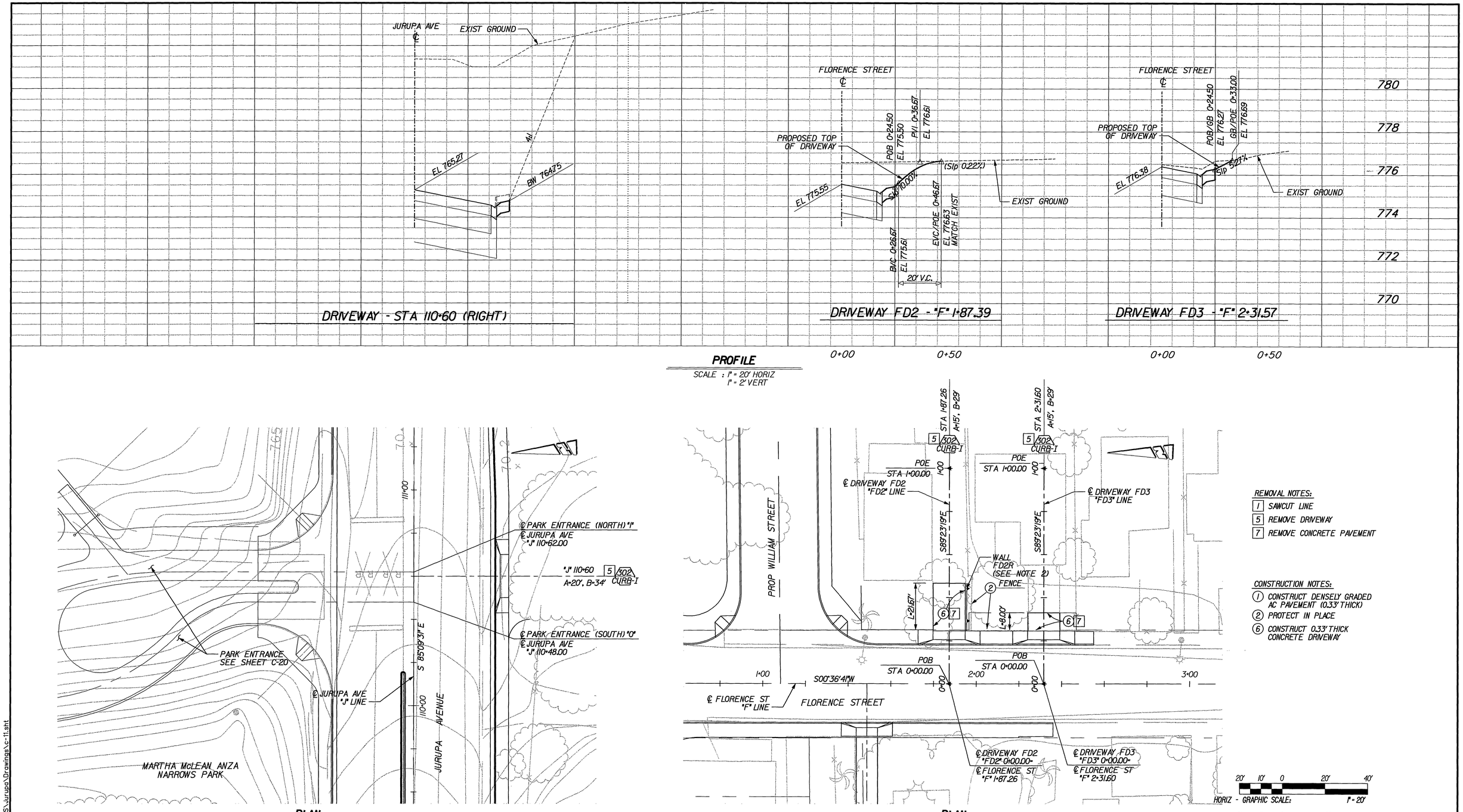

PROFILE

SCALE : 1" = 20' HORIZ
1" = 2' VERT

PLAN

SCALE : 1" = 20'

PLAN

SCALE : 1" = 20'

REMOVAL NOTES:

1 SAWCUT LINE
5 REMOVE DRIVEWAY
7 REMOVE CONCRETE PAVEMENT

CONSTRUCTION NOTES:

1 CONSTRUCT DENSELY GRADED AC PAVEMENT (0.33' THICK)
2 PROTECT IN PLACE
6 CONSTRUCT 0.33' THICK CONCRETE DRIVEWAY

20' 10' 0 20' 40'
HORIZ - GRAPHIC SCALE: 1" = 20'

2' 1' 0 2' 4'
VERT - GRAPHIC SCALE: 1" = 2'

NOTES:

1. STATIONING IS BASED ON LINES AS INDICATED.
2. SEE SHEET C-17 FOR RETAINING WALL DETAILS.

AS BUILT 1-20-10

PATTERSON & ASSOCIATES, INC.
CIVIL-TRANSPORTATION ENGINEERING
725 TOWN & COUNTRY ROAD
SUITE 300
ORANGE, CA 92868

DMJM HARRIS | AECOM
999 Town & Country Road
Orange, CA 92868
T 714.567.2501 F 714.567.2441

REGISTERED PROFESSIONAL ENGINEER
MORTEZA GHANDEHARI
No. C042150
EXP. 03/31/08
CIVIL
STATE OF CALIFORNIA

MARK	REVISIONS	APPR.	DATE

DESIGNED BY PM DRAWN BY SR CHECKED BY JLP

CITY OF RIVERSIDE, CALIFORNIA
PUBLIC WORKS DEPARTMENT

APPROVED BY	BY	DATE
PRINCIPAL ENGINEER	FM	12/7/06
CONST. CONTRACT ADMIN	DE	10/19/06
STREET SERVICES	[illegible]	11/6/06
SURVEYOR	—	—
TRAFFIC DIVISION	[illegible]	12-5-06
PARKS DEPARTMENT	—	—

APPROVED BY
CITY ENGINEER
DATE 12/8/06

JURUPA AVENUE UNDERPASS
PHASE II CONSTRUCTION

PLAN AND PROFILE
DRIVEWAYS

HORIZ. SCALE: 1" = 20' VERT. SCALE: 1" = 2'

R-3634
C-11

OCTOBER 9, 2006

10/7/06 1:39:18 PM J:\H\PROJECTS\Jurupa\Drawings\c-11.sht

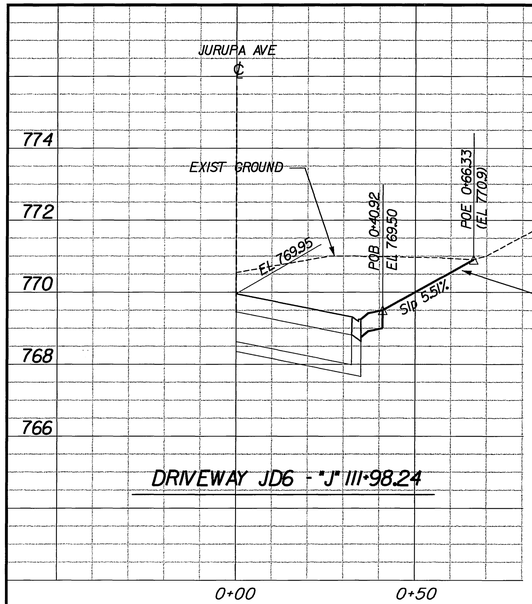

DRIVEWAY JD6 - "J" 111+98.24

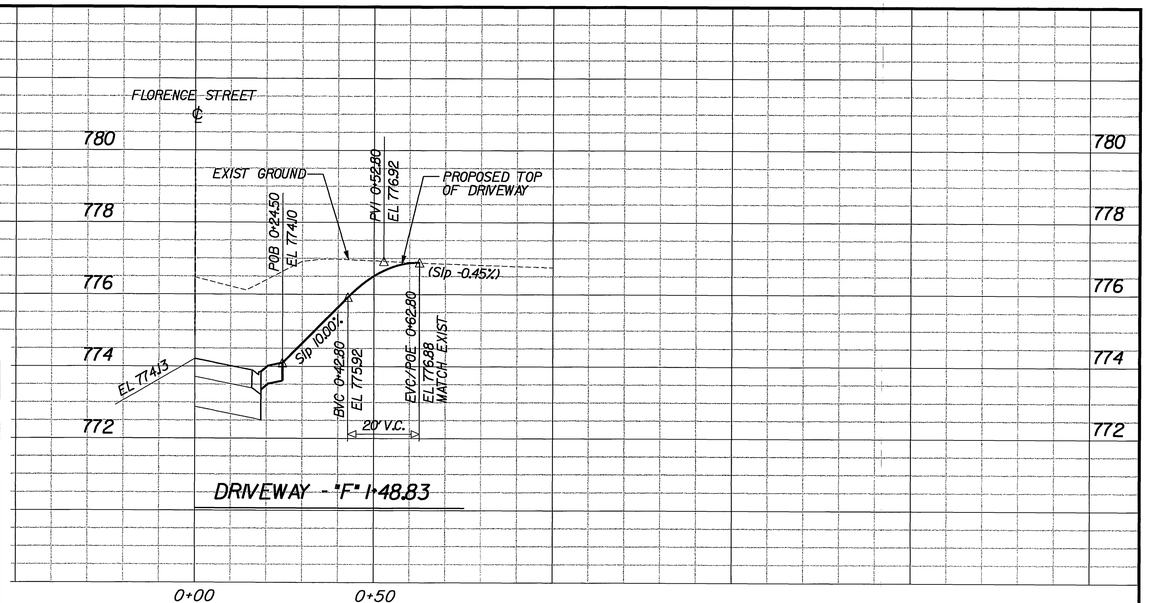

DRIVEWAY - "F" 1+48.83

TABLE OF POINTS

POINT	DESCRIPTION	LINE	STATION	OFFSET	FS/FL ELEV	TC ELEV
1	BACK OF SIDEWALK	"JD6"	0+41.51	16.99' RT	[768.90] FS	
2	LIMIT OF SAWCUT	"JD6"	0+66.33	16.99' RT	(770.90) FS	
3	BACK OF SIDEWALK	"JD6"	0+40.31	16.99' LT	[769.94] FS	
4	BACK OF SIDEWALK / BEGIN CURB	"JD6"	0+40.07	23.98' LT	[770.44] FS	[770.94] TC
5	AP CURB	"JD6"	0+49.09	16.99' LT	[770.55] FS	[771.05] TC
6	LIMIT OF SAWCUT / END CURB	"JD6"	0+66.33	16.99' LT	[771.00] FS	[771.50] TC
7	BACK OF SIDEWALK	"JD6"	0+39.82	31.14' LT	[770.65] FS	
8	EDGE OF SIDEWALK	"JD6"	0+50.97	22.49' LT	[770.40] FS	
9	LIMIT OF SAWCUT	"JD6"	0+66.33	22.49' LT	(771.10) FS	
10	LIMIT OF SAWCUT	"FDI"	0+62.80	5.00' RT	(776.90) FS	
11	LIMIT OF SAWCUT	"FDI"	0+62.80	5.00' LT	(776.90) FS	

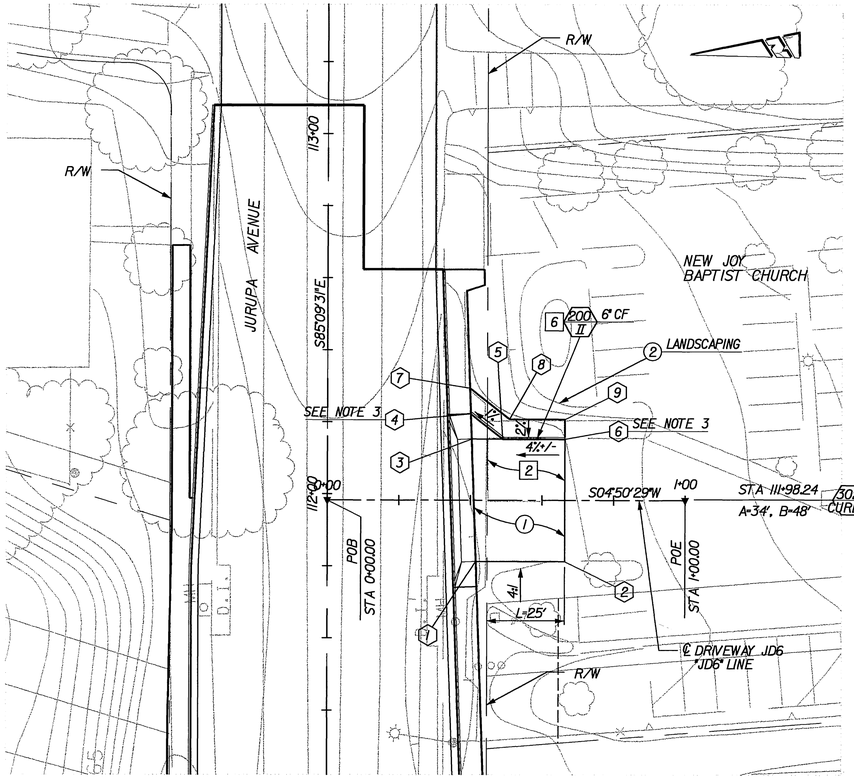

REMOVAL NOTES:

1. SAWCUT LINE
2. REMOVE AC PAVEMENT
5. REMOVE DRIVEWAY
6. REMOVE CURB
7. REMOVE CONCRETE PAVEMENT

CONSTRUCTION NOTES:

1. CONSTRUCT DENSELY GRADED AC PAVEMENT (0.33' THICK)
2. PROTECT IN PLACE
6. CONSTRUCT 0.33' THICK CONCRETE DRIVEWAY

NOTES:

1. STATIONING IS BASED ON LINES AS INDICATED.
2. NOT USED
3. BEVEL ENDS OF CURB WITH 1:1 SLOPE.
4. DIMENSIONS AND ELEVATIONS IN PARENTHESES REPRESENT EXISTING CONDITIONS. CONTRACTOR SHALL FIELD VERIFY DIMENSIONS AND ELEVATIONS PRIOR TO CONSTRUCTION.
5. DIMENSIONS AND ELEVATIONS IN BRACKETS REPRESENT APPROXIMATE LOCATIONS. CONTROLLING DIMENSIONS FOR ACTUAL LOCATIONS ARE SHOWN IN PLAN AND SECTIONS.

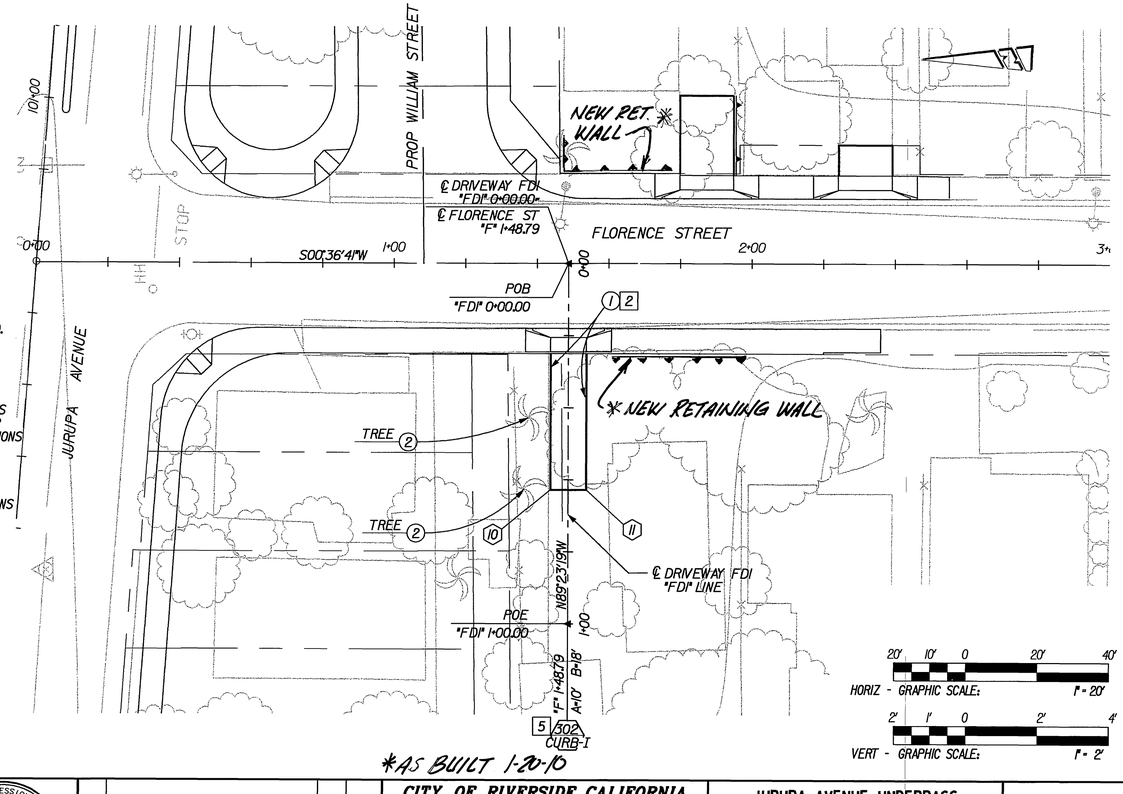

*AS BUILT 1-20-10

PATTERSON & ASSOCIATES, INC. CIVIL ENGINEERING CONSULTANTS
725 TOWN & COUNTRY ROAD
SUITE 300
ORANGE, CA 92868

DMJM HARRIS | AECOM
999 Town & Country Road
Orange, CA 92868
T 714.567.2501 F 714.567.2441

REGISTERED PROFESSIONAL ENGINEER
MORTEZA GHANDEHARY
No. C042150
EXP. 03/31/08
CIVIL
STATE OF CALIFORNIA

MARK	REVISIONS	APPR.	DATE

DESIGNED BY PM DRAWN BY SR CHECKED BY JLP

CITY OF RIVERSIDE, CALIFORNIA
PUBLIC WORKS DEPARTMENT

APPROVED BY	BY	DATE
PRINCIPAL ENGINEER		
CONST. CONTRACT ADMIN		
STREET SERVICES		
SURVEYOR		
TRAFFIC DIVISION		
PARKS DEPARTMENT		

APPROVED BY
CITY ENGINEER
DATE 1/8/08

JURUPA AVENUE UNDERPASS
PHASE II CONSTRUCTION

PLAN AND PROFILE
DRIVEWAYS

HORIZ. SCALE: 1" = 20' VERT. SCALE: 1" = 2'

R-3634
C-12

OCTOBER 9, 2006

10/7/06 1:39:32 PM J:\JN\PROJECTS\Jurupa\Drawings\c-12.sht

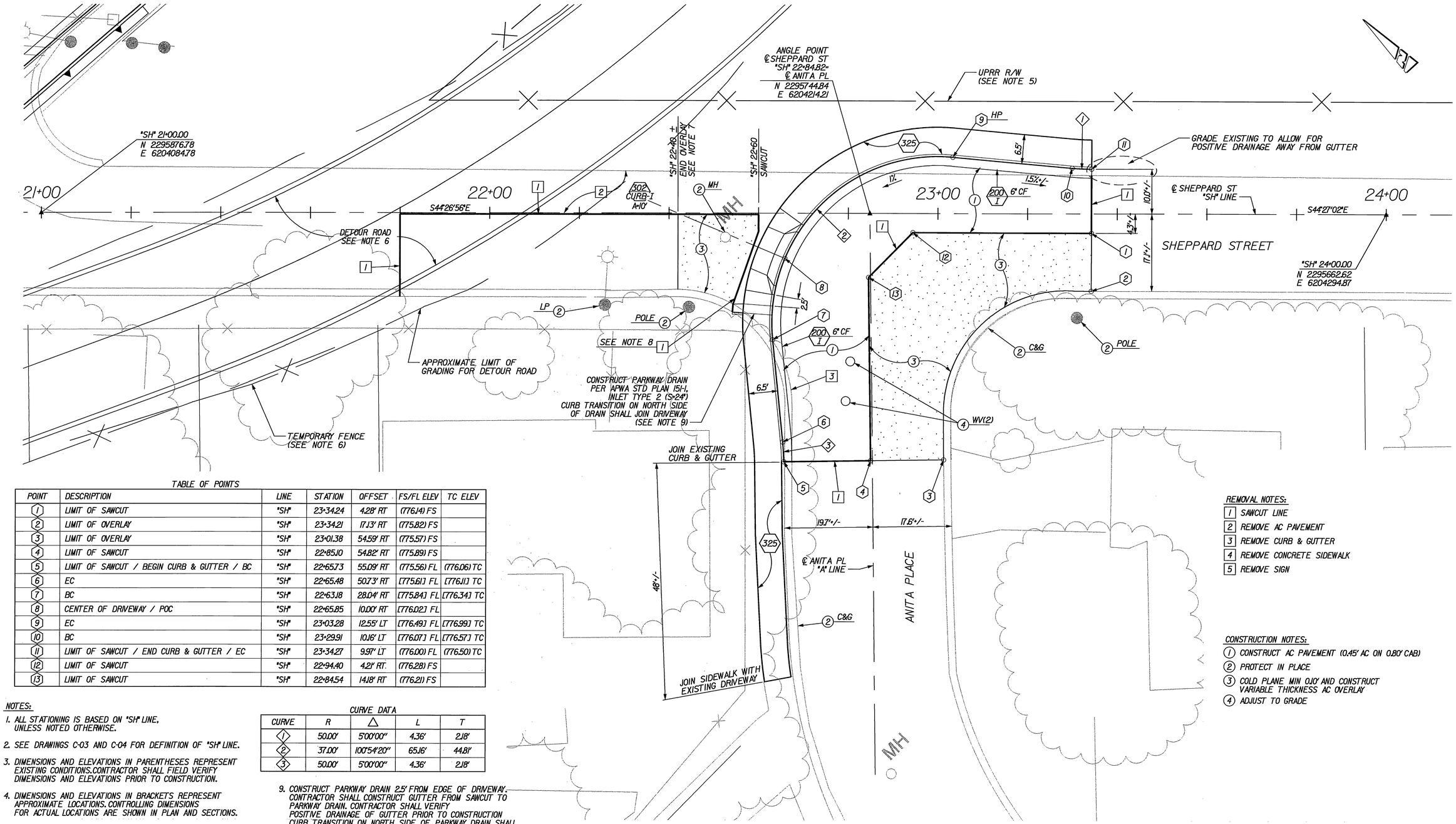

TABLE OF POINTS

POINT	DESCRIPTION	LINE	STATION	OFFSET	FS/FL ELEV	TC ELEV
1	LIMIT OF SAWCUT	"SH"	23+34.24	4.28' RT	(776.14) FS	
2	LIMIT OF OVERLAY	"SH"	23+34.21	17.13' RT	(775.82) FS	
3	LIMIT OF OVERLAY	"SH"	23+01.38	54.59' RT	(775.57) FS	
4	LIMIT OF SAWCUT	"SH"	22+85.10	54.82' RT	(775.89) FS	
5	LIMIT OF SAWCUT / BEGIN CURB & GUTTER / BC	"SH"	22+65.73	55.09' RT	(775.56) FL	(776.06) TC
6	EC	"SH"	22+65.48	50.73' RT	[775.61] FL	[776.11] TC
7	BC	"SH"	22+63.18	28.04' RT	[775.84] FL	[776.34] TC
8	CENTER OF DRIVEWAY / POC	"SH"	22+65.85	10.00' RT	[776.02] FL	
9	EC	"SH"	23+03.28	12.55' LT	[776.49] FL	[776.99] TC
10	BC	"SH"	23+29.91	10.16' LT	[776.07] FL	[776.57] TC
11	LIMIT OF SAWCUT / END CURB & GUTTER / EC	"SH"	23+34.27	9.97' LT	(776.00) FL	(776.50) TC
12	LIMIT OF SAWCUT	"SH"	22+94.40	4.21' RT.	(776.28) FS	
13	LIMIT OF SAWCUT	"SH"	22+84.54	14.18' RT	(776.21) FS	

NOTES:

1. ALL STATIONING IS BASED ON "SH" LINE, UNLESS NOTED OTHERWISE.
2. SEE DRAWINGS C-03 AND C-04 FOR DEFINITION OF "SH" LINE.
3. DIMENSIONS AND ELEVATIONS IN PARENTHESES REPRESENT EXISTING CONDITIONS. CONTRACTOR SHALL FIELD VERIFY DIMENSIONS AND ELEVATIONS PRIOR TO CONSTRUCTION.
4. DIMENSIONS AND ELEVATIONS IN BRACKETS REPRESENT APPROXIMATE LOCATIONS. CONTROLLING DIMENSIONS FOR ACTUAL LOCATIONS ARE SHOWN IN PLAN AND SECTIONS.
5. FOR FENCE ALONG UPRR R/W, SEE RAILROAD PLANS.
6. FOR DETOUR ROAD, SEE SHEETS DE-01 AND DE-02. INSTALL TEMPORARY FENCING ALONG DETOUR ROAD TO PROTECT PRIVATE PROPERTY AND RESTORE AFTER DETOUR ROAD IS REMOVED. SEE SHEET DE-01.
7. STATION IS APPROXIMATE. OVERLAY FROM BACK OF SIDEWALK TO EXISTING STREET ELEVATION AT NO MORE THAN 5% GRADE
8. SAWCUT GUTTER AND AC PAVEMENT MIN 1' BEHIND PROP SIDEWALK.

CURVE DATA

CURVE	R	Δ	L	T
1	50.00'	5°00'00"	4.36'	2.18'
2	37.00'	100°54'20"	65.16'	44.81'
3	50.00'	5°00'00"	4.36'	2.18'

9. CONSTRUCT PARKWAY DRAIN 2.5' FROM EDGE OF DRIVEWAY. CONTRACTOR SHALL CONSTRUCT GUTTER FROM SAWCUT TO PARKWAY DRAIN. CONTRACTOR SHALL VERIFY POSITIVE DRAINAGE OF GUTTER PRIOR TO CONSTRUCTION CURB TRANSITION ON NORTH SIDE OF PARKWAY DRAIN SHALL JOIN WITH DRIVEWAY.

REMOVAL NOTES:

1. SAWCUT LINE
2. REMOVE AC PAVEMENT
3. REMOVE CURB & GUTTER
4. REMOVE CONCRETE SIDEWALK
5. REMOVE SIGN

CONSTRUCTION NOTES:

1. CONSTRUCT AC PAVEMENT (0.45' AC ON 0.80' CAB)
2. PROTECT IN PLACE
3. COLD PLANE MIN 0.10' AND CONSTRUCT VARIABLE THICKNESS AC OVERLAY
4. ADJUST TO GRADE

10' 5' 0 10' 20'
HORIZ - GRAPHIC SCALE: 1" = 10'

AS BUILT 1-20-10

PATTERSON & ASSOCIATES, INC. CIVIL ENGINEERING CONSULTANTS
725 TOWN & COUNTRY ROAD SUITE 300 ORANGE, CA 92868
DMJM HARRIS | AECOM
999 Town & Country Road Orange, CA 92868 T 714.567.2501 F 714.567.2441

REGISTERED PROFESSIONAL ENGINEER MORTEZA GHANDEHARI No. C042150 EXP. 03/31/08 CIVIL STATE OF CALIFORNIA

MARK	REVISIONS	APPR.	DATE

DESIGNED BY PM DRAWN BY SR CHECKED BY JLP

CITY OF RIVERSIDE, CALIFORNIA
PUBLIC WORKS DEPARTMENT

APPROVED BY	BY	DATE
PRINCIPAL ENGINEER	PM	10/7/06
CONST. CONTRACT ADMIN		10/8/06
STREET SERVICES	JLP	10/10/06
SURVEYOR		
TRAFFIC DIVISION		12-7-06
PARKS DEPARTMENT		

APPROVED BY _____ CITY ENGINEER
DATE 10/9/06

JURUPA AVENUE UNDERPASS
PHASE II CONSTRUCTION
STREET IMPROVEMENT PLAN
SHEPPARD ST AND ANITA PL

R-3634
C-13

HORIZ. SCALE: 1" = 20' VERT. SCALE: 1" = 2'

OCTOBER 9, 2006

10/7/06 1:39:54 PM J:\H\PROJECTS\Jurupa\Drawings\c-13.sht

TABLE OF POINTS - CUL-DE-SAC

POINT	DESCRIPTION	LINE	STATION	OFFSET	FS/FL ELEV	TC ELEV
1	BEGIN CURB & GUTTER / JOIN EXISTING	"MV"	51+23.77	18.21' RT	(780.63) FL	(781.13) TC
2	BC	"MV"	51+13.77	18.00' RT	780.79 FL	781.29 TC
3	NOT USED	—	—	—	—	
4	MOC / HIGH POINT	"MV"	50+76.86	29.03' LT	781.45 FL	781.95 TC
5	EC	"MV"	51+31.31	53.71' LT	780.80 FL	781.30 TC
6	BC	"MV"	51+75.67	30.64' LT	779.80 FL	780.30 TC
7	POC	"MV"	51+99.30	21.57' LT	779.30 FL	779.80 TC
8	EC	"MV"	52+27.35	18.00' LT	778.74 FL	779.24 TC
9	END CURB & GUTTER / JOIN EXISTING	"MV"	52+41.65	18.00' LT	(778.47) FL	(778.92) TC
10	LIMIT OF SAWCUT	"MV"	52+41.65	0.00'	(779.44) FS	
11	LIMIT OF SAWCUT	"MV"	51+95.56	0.00'	(779.79) FS	
12	LIMIT OF SAWCUT/BC CROWN	"MV"	51+23.77	0.00'	(781.16) FS	
13	CENTER OF CUL-DE-SAC / EC CROWN	"MV"	51+13.77	20.00' LT	781.60 FS	

TABLE OF POINTS - HILLSIDE KNUCKLE

POINT	DESCRIPTION	LINE	STATION	OFFSET	FS/FL ELEV	TC ELEV
21	LIMIT OF SAWCUT	"MV"	46+93.27	16.21' LT	(775.80) FS	
22	BEGIN CURB & GUTTER / BC	"MV"	47+30.21	18.15' LT	(775.28) FL	(775.78) TC
23	EC / HIGH POINT	"MV"	47+60.22	11.92' RT	(776.13) FL	(776.63) TC
24	CENTER OF RAMP	"MV"	47+60.18	30.04' RT	(775.98) FL	
25	END CURB & GUTTER / LIMIT OF SAWCUT	"MV"	47+60.14	46.71' RT	(775.32) FL	(775.82) TC
26	LIMIT OF SAWCUT	"MV"	47+42.80	46.67' RT	(775.64) FS	
27	LIMIT OF OVERLAY	"MV"	47+25.46	46.63' RT	(775.16) FS	
28	LIMIT OF OVERLAY	"MV"	46+93.15	16.58' RT	(775.16) FS	
29	LIMIT OF SAWCUT	"MV"	46+93.21	0.00'	(775.48) FS	
30	LIMIT OF SAWCUT	"MV"	47+32.92	0.06' RT	(775.63) FS	
31	LIMIT OF SAWCUT	"MV"	47+42.90	10.03' RT	(775.62) FS	

CURVE DATA

CURVE	R	Δ	L	T
1	30.00'	90°08'29"	47.20'	30.01'
2	38.00'	207°28'54"	137.61'	—
3	112.00'	27°28'54"	53.72'	27.39'
4	177.24'	27°28'54"	85.01'	43.34'

REMOVAL NOTES:

1. SAWCUT LINE
2. REMOVE AC PAVEMENT
3. REMOVE CURB & GUTTER
4. REMOVE CONCRETE SIDEWALK
5. REMOVE TREE
6. REMOVE SIGN
7. RELOCATE POLE (BY OTHERS)
8. REMOVE DRIVEWAY
9. REMOVE FENCE
10. REMOVE POLE

CONSTRUCTION NOTES:

1. CONSTRUCT AC PAVEMENT (0.45' AC ON 0.80' CAB)
2. PROTECT IN PLACE
3. COLD PLANE MIN 0.10' AND CONSTRUCT VARIABLE THICKNESS AC OVERLAY
4. ADJUST TO GRADE
8. CONSTRUCT 6' HIGH ORNAMENTAL FENCE PER DETAIL ON SHEET C-15

NOTES:

1. ALL STATIONING IS BASED ON "MV" LINE, UNLESS NOTED OTHERWISE.
2. FOR SIGNING AND STRIPING, SEE SIGNING AND STRIPING PLANS.
3. FOR UTILITY INFORMATION, SEE UTILITY PLANS.
4. AFTER PAVEMENT, CURB AND GUTTER, AND SIDEWALK ARE REMOVED, REGRADE STREET R/W TO DRAIN TO WEST AND BE FLUSH WITH TOP OF NEW CURB & GUTTER.
5. EXISTING GRADE CROSSING PANELS, CROSSING EQUIPMENT, AND CROSSING SHELTER TO BE REMOVED BY OTHERS.
6. DIMENSIONS AND ELEVATIONS IN PARENTHESES REPRESENT EXISTING CONDITIONS. CONTRACTOR SHALL FIELD VERIFY DIMENSIONS AND ELEVATIONS PRIOR TO CONSTRUCTION.
7. DIMENSIONS AND ELEVATIONS IN BRACKETS REPRESENT APPROXIMATE LOCATIONS. CONTROLLING DIMENSIONS FOR ACTUAL LOCATIONS ARE SHOWN IN PLAN AND SECTIONS.
8. REMOVE AND RECONSTRUCT EXISTING DRIVEWAY WITH MAXIMUM 10 PERCENT GRADE.
9. CONTRACTOR SHALL REMOVE FOUNDATIONS FOR CROSSING GATES.

GRAPHIC SCALE: 20' 10' 0 20' 40' — 1" = 20'

*AS BUILT 1-20-10

PATTERSON & ASSOCIATES, INC. CIVIL ENGINEERING ENVIRONMENTAL
725 TOWN & COUNTRY ROAD SUITE 300 ORANGE, CA 92868

DMJM HARRIS | AECOM
999 Town & Country Road Orange, CA 92868 T 714.567.2501 F 714.567.2441

REGISTERED PROFESSIONAL ENGINEER MORTEZA GHANDEHARI No. C042150 EXP. 03/31/08 CIVIL STATE OF CALIFORNIA

MARK	REVISIONS	APPR.	DATE

DESIGNED BY PM DRAWN BY SR CHECKED BY JLP

CITY OF RIVERSIDE, CALIFORNIA
PUBLIC WORKS DEPARTMENT

APPROVED BY	BY	DATE
PRINCIPAL ENGINEER		
CONST. CONTRACT ADMIN		
STREET SERVICES		
SURVEYOR		
TRAFFIC DIVISION		
PARKS DEPARTMENT		

APPROVED BY _____ CITY ENGINEER
DATE 11/3/06

JURUPA AVENUE UNDERPASS
PHASE II CONSTRUCTION

STREET IMPROVEMENT PLAN
MOUNTAIN VIEW AVENUE

HORIZ. SCALE: 1" = 20' VERT. SCALE: 1" = 2'

R-3634
C-14

OCTOBER 9, 2006

10/7/06 2:56:17 PM J:\H\PROJECTS\Jurupa\Drawings\c-14.sht

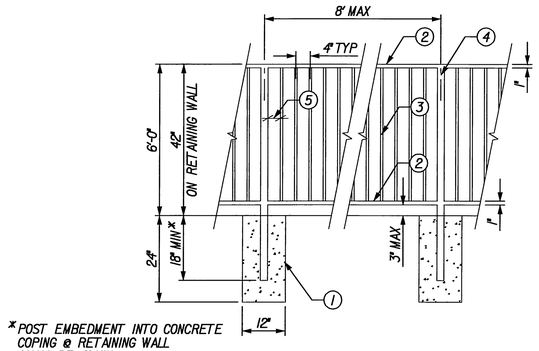

ORNAMENTAL FENCING DETAIL

SCALE: NOT TO SCALE

ORNAMENTAL FENCING CONSTRUCTION NOTES:

1. POST CONCRETE FOOTING
2. TOP & BOTTOM RAIL SHALL BE 1" X 2" TUBULAR STEEL
3. PICKETS SHALL BE 5/8" X 5/8" TUBULAR STEEL
4. FENCE POSTS SHALL BE 2" X 2" TUBULAR STEEL AT 8' O.C. MAX
5. PICKETS SHALL BE EQUALLY SPACED AT EACH END AND SHALL NOT BE LESS THAN 2". PICKET SPACING SHALL BE EQUALLY SPACED OVER ENTIRE PANEL LENGTH AND SHALL NOT EXCEED 4" O.C. OR BE LESS THAN 3 1/2" O.C.

ORNAMENTAL FENCING GENERAL NOTES:

1. ALL STEEL SHALL BE 14 GAUGE.
2. CONTINUOUS WELD ALL CONNECTIONS.
3. ALL EXPOSED STEEL SHALL BE POWDER-COATED.

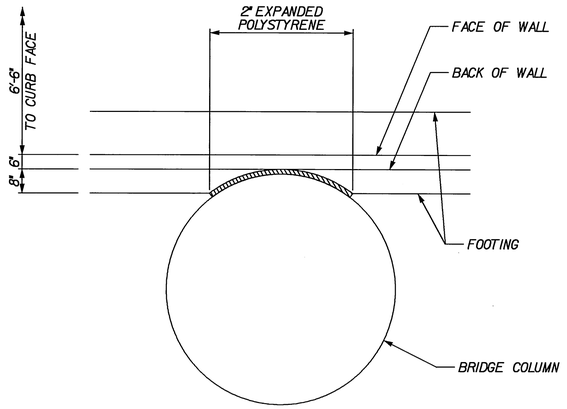

BRIDGE COLUMN AT RETAINING WALL

SCALE: NOT TO SCALE

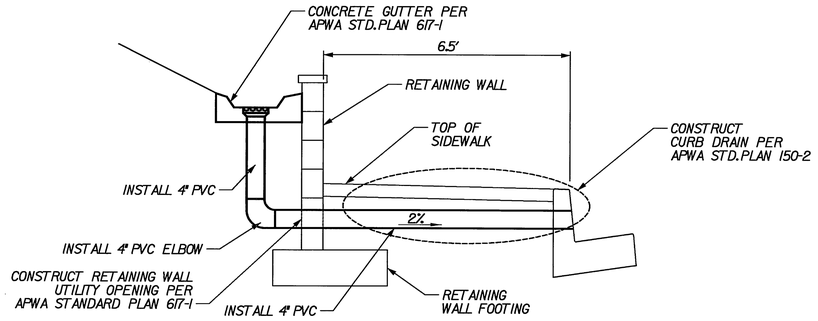

DOWN DRAIN DETAIL

SCALE: NOT TO SCALE

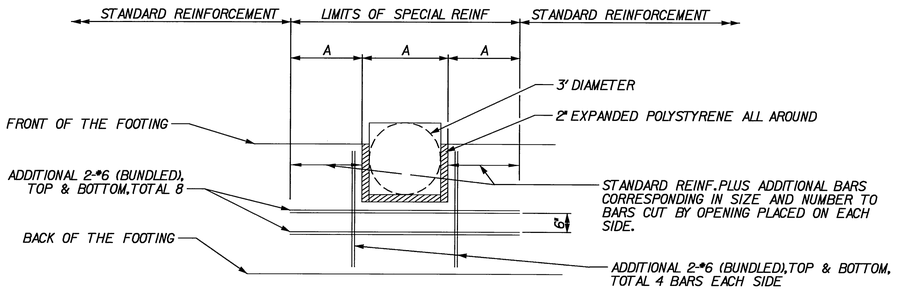

RETAINING WALL FOOTING OPENING DETAIL AT STREET LIGHT AND TRAFFIC SIGNAL POLE FOUNDATION

SCALE: NOT TO SCALE

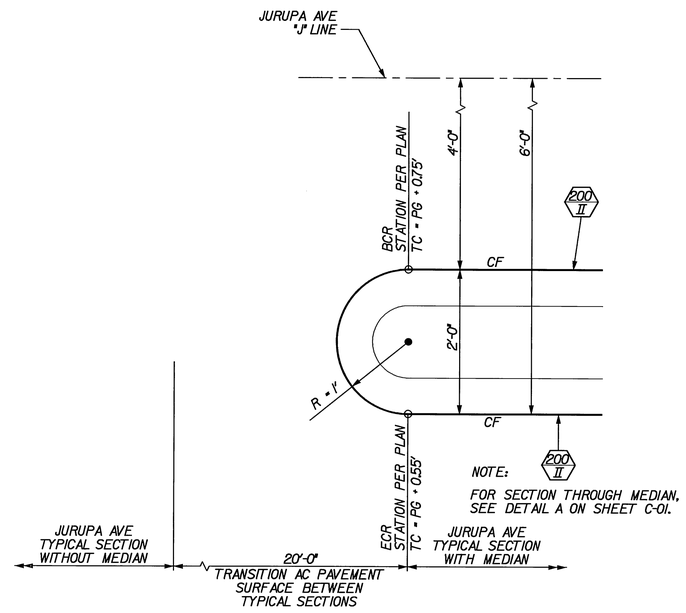

MEDIAN NOSE

SCALE: NOT TO SCALE

AS BUILT 1-20-10

PATTERSON & ASSOCIATES, INC. CIVIL ENGINEERING CONSULTANTS
725 TOWN & COUNTRY ROAD SUITE 300 ORANGE, CA 92868
DMJM HARRIS | AECOM
999 Town & Country Road Orange, CA 92868 T 714.567.2501 F 714.567.2441

REGISTERED PROFESSIONAL ENGINEER MORTEZA GHANDEHARI No. C042150 EXP. 03/31/08 CIVIL STATE OF CALIFORNIA

MARK	REVISIONS	APPR.	DATE

DESIGNED BY PM DRAWN BY SR CHECKED BY JLP

CITY OF RIVERSIDE, CALIFORNIA
PUBLIC WORKS DEPARTMENT

APPROVED BY	BY	DATE
PRINCIPAL ENGINEER	FM	10/06
CONST. CONTRACT ADMIN	DC	10/06
STREET SERVICES	JBG	10/06
SURVEYOR	—	—
TRAFFIC DIVISION	[illegible]	10-9-06
PARKS DEPARTMENT	—	—

APPROVED BY _____ CITY ENGINEER
DATE 10/18/06

JURUPA AVENUE UNDERPASS PHASE II CONSTRUCTION

CIVIL DETAILS

SCALE: NONE

R-3634
C-15

OCTOBER 9, 2006

10/7/06 2:56:48 PM J:\H\PROJECTS\Jurupa\Drawings\c-15.sht

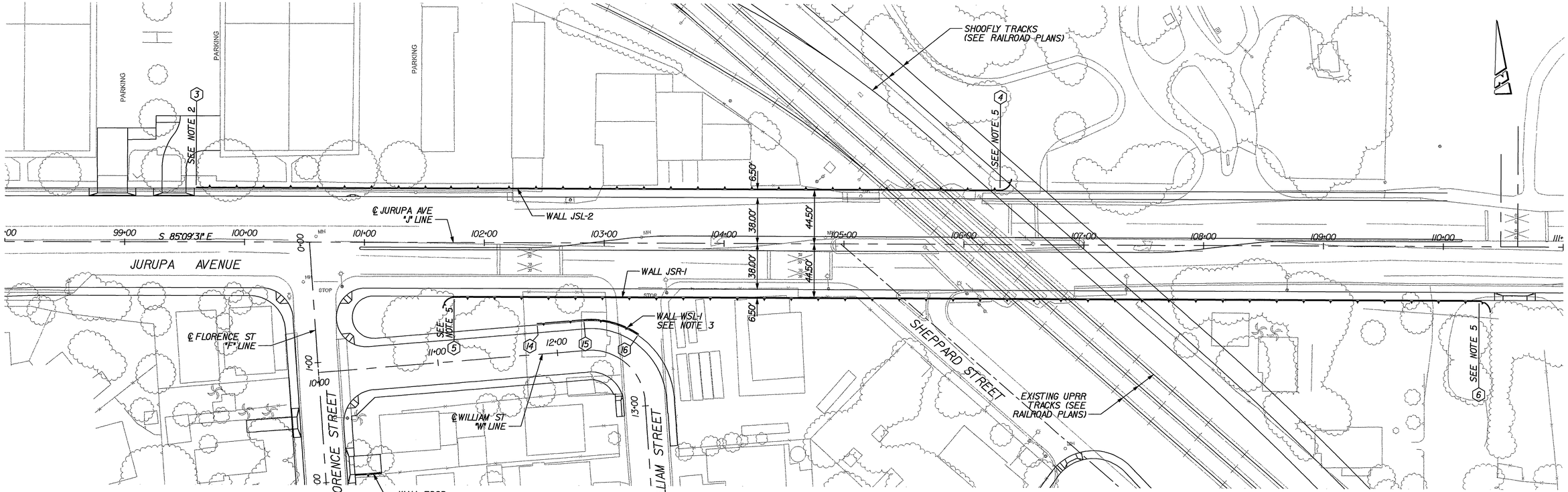

PLAN

SCALE: 1"=40'

NOTES:

1. WALLS JSL-2 AND JSR-1 SHALL BE CONSTANT HEIGHT RETAINING WALLS, UNLESS NOTED OTHERWISE. SEE SHEET C-01 FOR DETAILS. ELEVATIONS FOR WALLS SHALL BE BASED ON THE CROSS-SECTION IN THE DETAIL ON SHEET C-01.
2. RETAINING WALL JSL-2 SHALL BEGIN AT "J" 99+60 AND VARY IN HEIGHT TO "J" 99+70. WHERE IT SHALL BE FULL HEIGHT. GUTTER BEHIND WALL SHALL BEGIN AT "J" 99+70. BETWEEN "J" 99+60 AND "J" 99+70, SLOPE GROUND TO THE WEST AT A 4:1 SLOPE BEHIND WALL.
3. WALL WSL-1 SHALL BE MASONRY RETAINING WALL PER APWA STD PLAN 618-1, TYPE B. SEE SHEET C-17 FOR ELEVATION.
4. FOR STREET LAYOUT, SEE SHEETS C-02 THRU C-06.
5. FOR END OF WALL RETURN, SEE WALL RETURN DETAIL ON THIS SHEET. USE MIRRORED DETAIL AT POINT 6.
6. STATIONING IS BASED ON STATION LINES AS INDICATED.

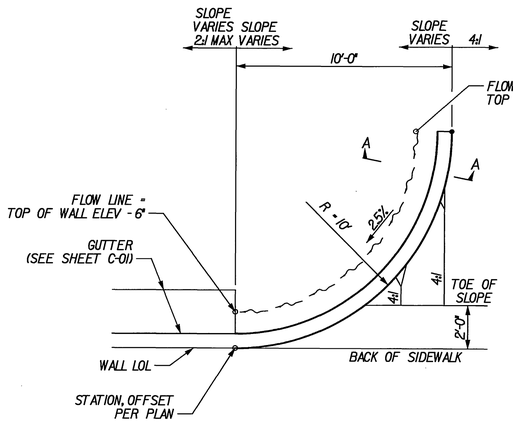

WALL RETURN DETAIL

SCALE: NOT TO SCALE

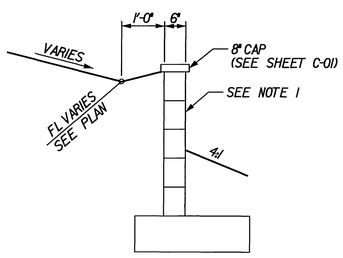

SECTION A-A

TABLE OF POINTS

POINT	DESCRIPTION	LINE	STATION	OFFSET
3	BEGIN WALL JSL-2 LOL	"J"	99+60.00	44.50' LT
4	END WALL JSL-2 LOL	"J"	106+30.00	44.50' LT
5	BEGIN WALL JSR-1 LOL	"J"	101+80.00	44.50' RT
6	END WALL JSR-1 LOL	"J"	110+30.00	44.50' RT
14	BEGIN WALL WSL-1 LOL	"W"	11+90.00	25.17' LT
15	BC WALL WSL-1 LOL	"W"	12+24.15	25.17' LT
16	EC / END WALL WSL-1 LOL	"W"	12+55.00	25.17' LT

40' 20' 0 40' 80'

HORIZ - GRAPHIC SCALE: 1" = 40'

AS BUILT 1-20-10

PATTERSON & ASSOCIATES, INC. CIVIL/TRANSPORTATION ENGINEERING
725 TOWN & COUNTRY ROAD SUITE 300 ORANGE, CA 92868

DMJM HARRIS | AECOM
999 Town & Country Road Orange, CA 92868 T 714.567.2501 F 714.567.2441

REGISTERED PROFESSIONAL ENGINEER MORTEZA GHANDEHARI No. C042150 EXP. 03/31/08 CIVIL STATE OF CALIFORNIA

MARK	REVISIONS	APPR.	DATE

DESIGNED BY PM DRAWN BY SR CHECKED BY JLP

CITY OF RIVERSIDE, CALIFORNIA
PUBLIC WORKS DEPARTMENT

APPROVED BY	BY	DATE
PRINCIPAL ENGINEER		
CONST. CONTRACT ADMIN		
STREET SERVICES		
SURVEYOR		
TRAFFIC DIVISION		
PARKS DEPARTMENT		

APPROVED BY _____ CITY ENGINEER

DATE 12/8/06

JURUPA AVENUE UNDERPASS PHASE II CONSTRUCTION

RETAINING WALL LAYOUT PLAN

SCALE: 1" = 40'

R-3634
C-16

OCTOBER 9, 2006

10/7/06 2:57:05 PM J:\HV\PROJECTS\Jurupa\Drawings\c-16.sht

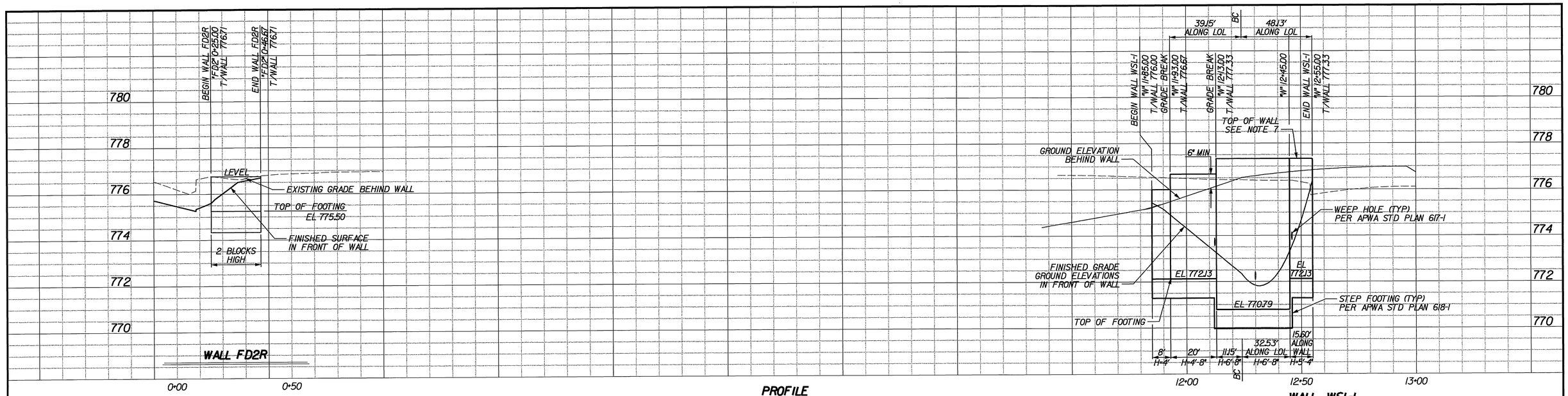

PROFILE

SCALE : 1" = 20' HORIZ
1" = 2' VERT

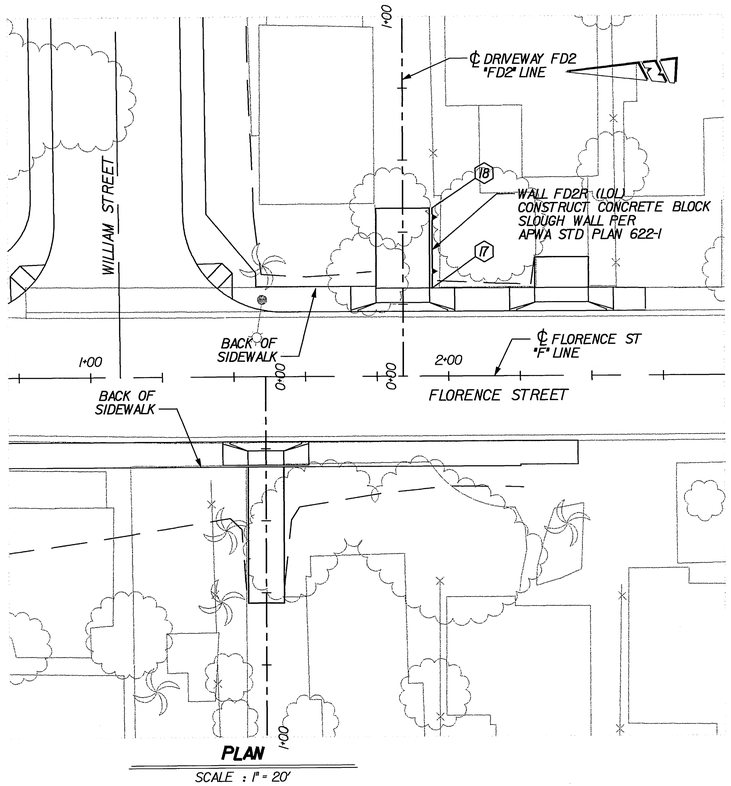

PLAN

SCALE : 1" = 20'

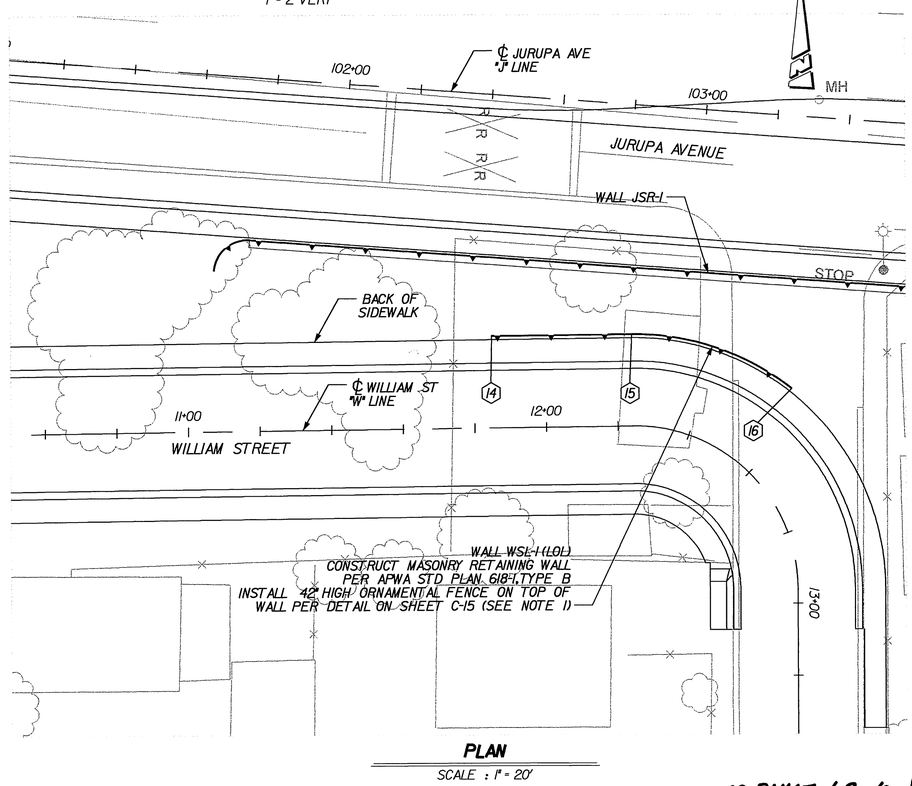

PLAN

SCALE : 1" = 20'

TABLE OF POINTS

POINT	DESCRIPTION	LINE	STATION	OFFSET
14	BEGIN WALL WSL-1 LOL	"W"	11+90.00	25.17' LT
15	BC WALL WSL-1 LOL	"W"	12+24.15	25.17' LT
16	EC / END WALL WSL-1 LOL	"W"	12+55.00	25.17' LT
17	BEGIN WALL FD2R LOL	"FD2"	0+25.00	7.50' RT
18	END WALL FD2R LOL	"FD2"	0+46.67	7.50' RT

NOTES:

1. ORNAMENTAL FENCE SHALL BE POWDER-COATED AND MATCH COLOR OF BRIDGE HANDRAIL.
2. FOR STREET LAYOUT, SEE SHEET C-06.
3. STATIONING BASED ON STATION LINES AS INDICATED.
4. FOR RETAINING WALLS ALONG THE STREET, SEE SHEET C-16.
5. FOR LAYOUT OF DRIVEWAYS, SEE SHEET C-06.
6. FOR DRIVEWAY PROFILES, SEE SHEET C-11 AND C-12.
7. TOP OF WALL ELEVATIONS DO NOT INCLUDE MORTAR CAP.

HORIZ - GRAPHIC SCALE: 20' 10' 0 20' 40' 1" = 20'

VERT - GRAPHIC SCALE: 2' 1' 0 2' 4' 1" = 2'

AS BUILT 1-20-10

PATTERSON & ASSOCIATES, INC. CIVIL ENGINEERING CONSULTANTS
725 TOWN & COUNTRY ROAD
SUITE 300
ORANGE, CA 92868

DMJM HARRIS | AECOM
999 Town & Country Road
Orange, CA 92868
T 714.567.2501 F 714.567.2441

REGISTERED PROFESSIONAL ENGINEER
MARK E.A. GHANDEHARI
No. C042150
EXP. 03/31/08
CIVIL
STATE OF CALIFORNIA

MARK	REVISIONS	APPR.	DATE

DESIGNED BY PM DRAWN BY SR CHECKED BY JLP

CITY OF RIVERSIDE, CALIFORNIA
PUBLIC WORKS DEPARTMENT

APPROVED BY	BY	DATE
PRINCIPAL ENGINEER		
CONST. CONTRACT ADMIN		
STREET SERVICES		
SURVEYOR		
TRAFFIC DIVISION		
PARKS DEPARTMENT		

APPROVED BY
CITY ENGINEER
DATE 12/18/06

JURUPA AVENUE UNDERPASS
PHASE II CONSTRUCTION
RETAINING WALLS
FLORENCE STREET AND
WILLIAM STREET

HORIZ. SCALE: 1" = 20' VERT. SCALE: 1" = 2'

R-3634
C-17

OCTOBER 9, 2006

10/7/06 2:57:27 PM J:\N\PROJECTS\Jurupa\Drawings\c-17.sht

LEGEND

APPROXIMATE LIMITS OF ASPHALT CONCRETE PAVEMENT REMOVAL

APPROXIMATE LIMITS OF CONCRETE PAVEMENT REMOVAL

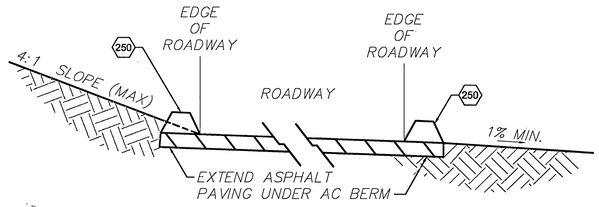

NOTE: LIMITS OF AC BERM AS SHOWN ON PLAN

DETAIL A

ASPHALT CONCRETE BERM CONSTRUCTION DETAIL
NOT TO SCALE

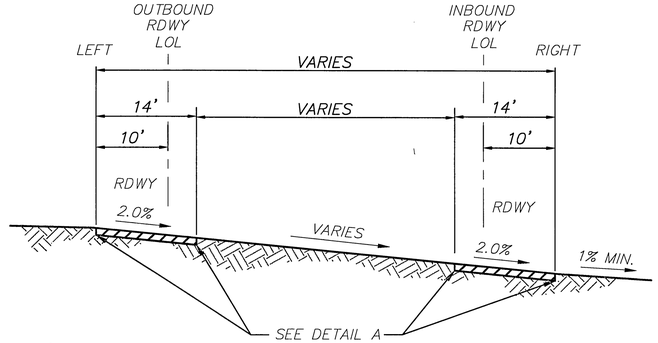

TYPICAL SEPARATED ROAD SECTION

SECTION A–A
NOT TO SCALE

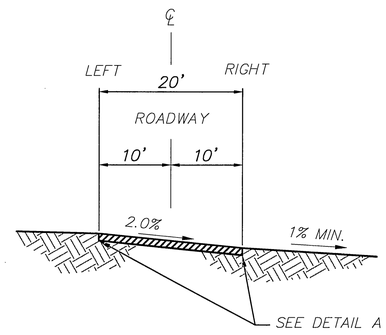

TYPICAL ROAD SECTION

SECTION C–C
NOT TO SCALE

CURVE TABLE				
◇	RADIUS	DELTA	TANGENT	LENGTH
1	165.00'	96^20'27"	184.35'	277.44'
2	130.00'	77^48'28"	104.91'	176.54'
3	45.00'	46^35'49"	19.38'	36.60'
4	100.00'	42^36'36"	39.00'	74.37'
5	112.00'	92^21'15"	116.70'	180.53'

SPECIFIC CONSTRUCTION NOTES

(17) CONSTRUCT 3" AC PAVEMENT OVER 12" OF RECOMPACTED SUBGRADE.

(18) DOUBLE YELLOW SOLID PAINT STRIPE

(19) 4" YELLOW BROKEN PAINT STRIPE

(250) ASPHALT CONCRETE BERMS, TYPE I TRAPEZOIDAL UNLESS OTHERWISE SHOWN ON PLAN

(304) WHEELCHAIR RAMP, TYPE I

(325) SIDEWALK

AS BUILT 1-20-10

GRAPHIC SCALE: 1" = 20' (20' 10' 0 20' 40') HORIZ

RIVERSIDE COUNTY REGIONAL PARK AND OPEN-SPACE DISTRICT
APPROVED BY PAUL FRANDSEN
GENERAL MANAGER
DATE 11/14/06

DMJM HARRIS | AECOM
999 Town & Country Road
Orange, CA 92868
T 714.567.2501 F 714.567.2441

REGISTERED PROFESSIONAL ENGINEER CHRIS H. BECK No. C41824 Exp. 3-31-08 CIVIL STATE OF CALIFORNIA

MARK	REVISIONS	APPR.	DATE

DESIGNED BY C.P. DRAWN BY C.P. CHECKED BY P.S.

CITY OF RIVERSIDE, CALIFORNIA
PUBLIC WORKS DEPARTMENT

APPROVED BY	BY	DATE
CONST. CONTRACT ADMIN.		
PRINCIPAL ENGINEER		
STREET SERVICES		
SURVEYOR	—	—
TRAFFIC DIVISION		
PARKS DEPARTMENT	—	—

APPROVED BY
CITY ENGINEER
DATE 12/8/06

JURUPA AVENUE UNDERPASS
PHASE II CONSTRUCTION
MARTHA McLEAN ANZA NARROWS PARK
ENTRANCE ROAD
CONSTRUCTION DETAILS, GRADING & PAVING PLAN

R-3634
C-20
SHEET ____ OF ____
October 6, 2006

DWG: P:\63903\003 Final Design\Civil\Sheet\C-20.dwg
TIME: 10-06-06 – 4:40pm User: searlesm XRef Files: ...\xref\xbdr_civil.dwg ...\xref\xtopo.dwg ...\xref\xutil_ex.dwg ...\xref\xsewer.dwg ...\xref\xstorm.dwg ...\xref\xparkentry.dwg ...\xref\xaccess.dwg ...\xref\xgradlng.dwg ...\xref\xdaylight.dwg

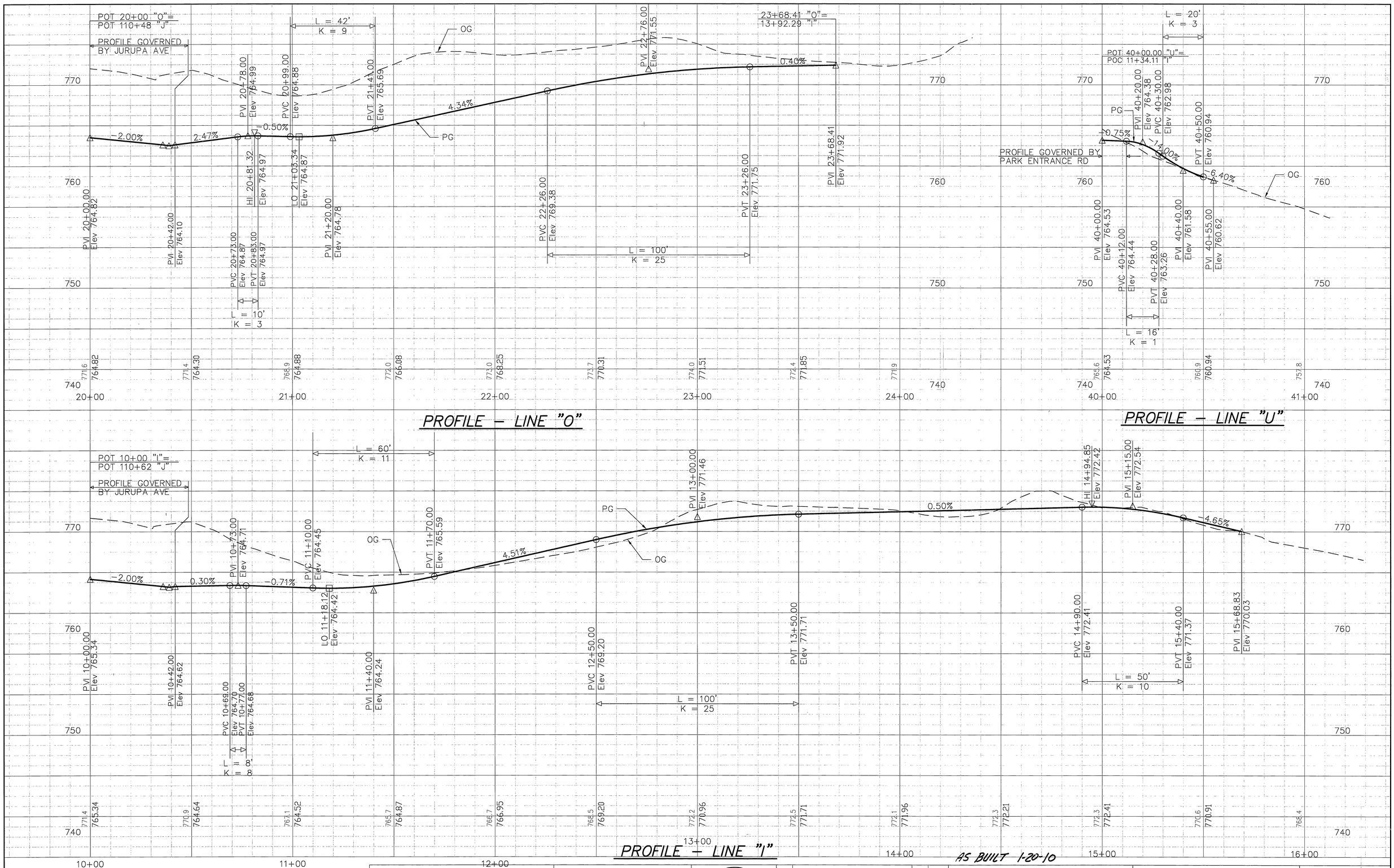

PROFILE – LINE "O"

PROFILE – LINE "U"

PROFILE – LINE "I"

AS BUILT 1-20-10

GRAPHIC SCALE: 1" = 40' HORIZ

GRAPHIC SCALE: 1" = 4' VERT

RIVERSIDE COUNTY REGIONAL PARK AND OPEN-SPACE DISTRICT

APPROVED BY PAUL FRANDSEN
GENERAL MANAGER
DATE 11/14/06

DMJM HARRIS | AECOM
999 Town & Country Road
Orange, CA 92868
T 714.567.2501 F 714.567.2441

REGISTERED PROFESSIONAL ENGINEER
CHRIS H. BREEN
No. C41824
Exp. 3-31-08
CIVIL
STATE OF CALIFORNIA

MARK	REVISIONS	APPR.	DATE

DESIGNED BY C.P. DRAWN BY C.P. CHECKED BY P.S.

CITY OF RIVERSIDE, CALIFORNIA
PUBLIC WORKS DEPARTMENT

APPROVED BY	BY	DATE
CONST. CONTRACT ADMIN.		
PRINCIPAL ENGINEER		
STREET SERVICES		
SURVEYOR		
TRAFFIC DIVISION		
PARKS DEPARTMENT		

APPROVED BY
CITY ENGINEER
DATE 12/8/06

JURUPA AVENUE UNDERPASS
PHASE II CONSTRUCTION
MARTHA McLEAN ANZA NARROWS PARK
ENTRANCE ROAD
PROFILES
LINE "I", "O" & "U"

R-3634
C-21

SHEET ____ OF ____

October 6, 2006

CURVE TABLE				
◇	RADIUS	DELTA	TANGENT	LENGTH
A	35.00'	90^00'00"	35.00'	54.98'
B	35.00'	90^00'00"	35.00'	54.98'

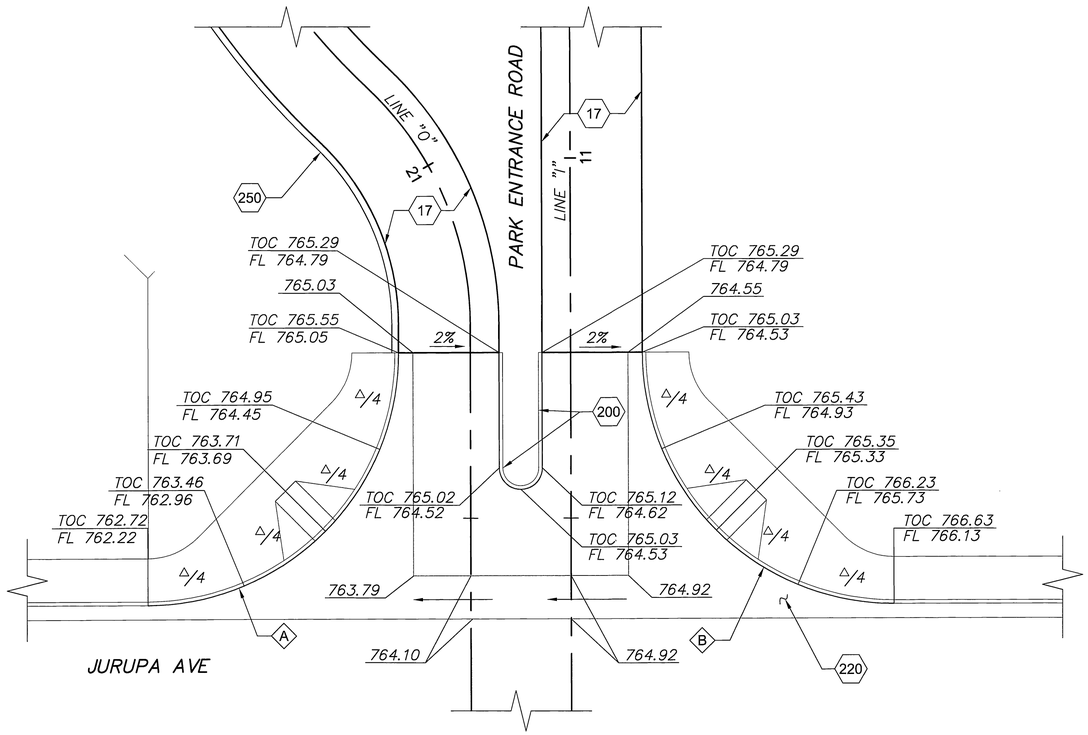

DETAIL – PARK ENTRANCE

SCALE: 1"=10'

SPECIFIC CONSTRUCTION NOTES

(17) 3" AC PAVEMENT OVER 12" OF COMPACTED SUBGRADE.

(200) CURB AND GUTTER, TYPE II

(220) CROSS GUTTERS

(250) ASPHALT CONCRETE BERMS, TYPE 1 TRAPEZOIDAL

AS BUILT 1-20-10

10' 5' 0 10' 20'

GRAPHIC SCALE: 1" = 10' HORIZ

RIVERSIDE COUNTY REGIONAL PARK AND OPEN-SPACE DISTRICT

APPROVED BY PAUL FRANDSEN
GENERAL MANAGER

DATE 11/14/06

DMJM HARRIS | AECOM
999 Town & Country Road
Orange, CA 92868
T 714.567.2501 F 714.567.2441

REGISTERED PROFESSIONAL ENGINEER
CHRIS H. BRETZ
No. C41824
Exp. 3-31-08
CIVIL
STATE OF CALIFORNIA

MARK	REVISIONS	APPR.	DATE

DESIGNED BY C.P. DRAWN BY C.P. CHECKED BY P.S.

CITY OF RIVERSIDE, CALIFORNIA
PUBLIC WORKS DEPARTMENT

APPROVED BY	BY	DATE
CONST. CONTRACT ADMIN.	[illegible]	12/15/06
PRINCIPAL ENGINEER	[illegible]	12/7/06
STREET SERVICES	[illegible]	11/16/06
SURVEYOR	—	—
TRAFFIC DIVISION	[illegible]	12-9-06
PARKS DEPARTMENT	—	—

APPROVED BY
CITY ENGINEER

DATE 12/8/06

JURUPA AVENUE UNDERPASS
PHASE II CONSTRUCTION
MARTHA McLEAN ANZA NARROWS PARK
ENTRANCE ROAD
CONSTRUCTION DETAILS

R-3634
C-22

SHEET _____ OF _____

October 6, 2006