SHOOFLY TRACK 1 GEOMETRY DATA (SF1)

CURVE NO.	DESC	BEARING	DISTANCE	STATION	STATION,OFFSET FROM MAIN TRACK 2	NORTHING	EASTING	Dc	RADIUS	△	L	T	Ea/Eu SPEED
	POB	S44°14'27"E	0.00	0+00.00	2790+41.25, 15.00' LT	2296679.994	6203428.210						
SF1-1	TS		50.00	0+00.00	2790+41.25, 15.00' LT	2296679.994	6203428.210						Ea=1" Eu=0.42"(F) 2.10"(P)
	SC			0+50.00	2790+91.25, 15.16' LT	2296644.288	6203463.210						
	PI				2791+85.51, 15.00' LT	2296577.440	6203529.601	2°15'00"	2546.64	4°14'15"	188.34	94.21	
	CS		50.00	2+38.34	2792+79.34, 23.97' LT	2296515.680	6203600.749						V=30(F) 40(P)
	ST	S49°36'11"E	300.00	2+88.34	2793+29.14, 28.48' LT	2296483.152	6203638.722						
SF1-2	TS		50.00	5+88.34	2796+27.83, 56.52' LT	2296288.728	6203867.194						Ea=1" Eu=0.42"(F) 2.10"(P)
	SC			6+38.34	2796+77.62, 61.03' LT	2296256.200	6203905.166						
	PI				2797+71.46, 70.00' LT	2296194.440	6203976.315	2°15'00"	2546.64	4°14'15"	188.34	94.21	
	CS		50.00	8+26.69	2798+65.72, 69.84' LT	2296127.592	6204042.705						V=30(F) 40(P)
	ST	S44°14'27"E	301.40	8+76.69	2799+15.72, 70.00' LT	2296091.886	6204077.706						
SF1-3	TS		50.00	11+78.09	2802+17.12, 70.00' LT	2295875.955	6204287.988						Ea=1" Eu=0.42"(F) 2.10"(P)
	SC			12+28.09	2802+67.12, 69.84' LT	2295840.021	6204322.755						
	PI				2803+61.38, 70.00' LT	2295771.882	6204387.820	2°15'00"	2546.64	4°14'15"	188.34	94.21	
	CS		50.00	14+16.43	2804+55.22, 61.03' LT	2295699.122	6204447.673						V=30(F) 40(P)
	ST	S38°52'42"E	300.00	14+66.43	2805+05.01, 56.52' LT	2295660.301	6204479.183						
SF1-4	TS		50.00	17+66.43	2808+03.70, 28.48' LT	2295426.757	6204667.484						Ea=1" Eu=0.42"(F) 2.10"(P)
	SC			18+16.43	2808+53.49, 23.97' LT	2295387.936	6204698.995						
	PI				2809+47.33, 15.00' LT	2295315.176	6204758.848	2°15'00"	2546.64	4°14'15"	188.34	94.21	
	CS		50.00	20+04.78	2810+41.59, 15.16' LT	2295247.037	6204823.913						V=30(F) 40(P)
	ST	S44°14'27"E	0.00	20+54.78	2810+91.59, 15.00' LT	2295211.103	6204858.679						
	POE			20+54.78	2810+91.59, 15.00' LT	2295211.103	6204858.679						

SHOOFLY TRACK 2 GEOMETRY DATA (SF2)

CURVE NO.	DESC	BEARING	DISTANCE	STATION	STATION,OFFSET FROM MAIN TRACK 2	NORTHING	EASTING	Dc	RADIUS	△	L	T	Ea/Eu SPEED
	POB	S44°14'27"E	0.00	0+00.00	2790+41.95, 0.00'	2296669.026	6203417.953						
SF2-1	TS		50.00	0+00.00	2790+41.95, 0.00'	2296669.026	6203417.953						Ea=1" Eu=0.42"(F) 2.10"(P)
	SC			0+50.00	2790+91.95, 0.16' LT	2296633.320	6203452.954						
	PI				2791+86.21, 0.00'	2296566.471	6203519.345	2°15'00"	2546.64	4°14'15"	188.34	94.21	
	CS		50.00	2+38.34	2792+80.05, 8.97' LT	2296504.712	6203590.493						V=30(F) 40(P)
	ST	S49°36'11"E	300.00	2+88.34	2793+29.84, 13.48' LT	2296472.183	6203628.466						
SF2-2	TS		50.00	5+88.34	2796+28.53, 41.52' LT	2296277.760	6203856.938						Ea=1" Eu=0.42"(F) 2.10"(P)
	SC			6+38.34	2796+78.33, 46.03' LT	2296245.232	6203894.910						
	PI				2797+72.16, 55.00' LT	2296183.472	6203966.058	2°15'00"	2546.64	4°14'15"	188.34	94.21	
	CS		50.00	8+26.69	2798+66.42, 54.84' LT	2296116.624	6204032.449						V=30(F) 40(P)
	ST	S44°14'27"E	300.00	8+76.69	2799+16.42, 55.00' LT	2296080.918	6204067.450						
SF2-3	TS		50.00	11+76.69	2802+16.42, 55.00' LT	2295865.993	6204276.752						Ea=1" Eu=0.42"(F) 2.10"(P)
	SC			12+26.69	2802+66.42, 54.84' LT	2295830.059	6204311.518						
	PI				2803+60.68, 55.00' LT	2295761.920	6204376.584	2°15'00"	2546.64	4°14'15"	188.34	94.21	
	CS		50.00	14+15.03	2804+54.51, 46.03' LT	2295689.160	6204436.437						V=30(F) 40(P)
	ST	S38°52'42"E	300.00	14+65.03	2805+04.31, 41.52' LT	2295650.339	6204467.947						
SF2-4	TS		50.00	17+65.03	2808+03.00, 13.48' LT	2295416.795	6204656.248						Ea=1" Eu=0.42"(F) 2.10"(P)
	SC			18+15.03	2808+52.79, 8.97' LT	2295377.974	6204687.758						
	PI				2809+46.63, 0.00'	2295305.214	6204747.611	2°15'00"	2546.64	4°14'15"	188.34	94.21	
	CS		50.00	20+03.37	2810+40.89, 0.16' LT	2295237.075	6204812.677						V=30(F) 40(P)
	ST	S44°14'27"E	0.00	20+53.37	2810+90.89, 0.00'	2295201.141	6204847.443						
	POE			20+53.37	2810+90.89, 0.00'	2295201.141	6204847.443						

SPIRAL DATA

SPIRAL	LS	θ	X	Y	P	K	LT	ST	TS	I
SHOOFLY TRACK 1										
SF1-1 - IN	50.00	0°33'45"	50.00	0.16	0.04	25.00	33.33	16.67	144.26	5°21'45"
SF1-1 - OUT	50.00	0°33'45"	50.00	0.16	0.04	25.00	33.33	16.67	144.26	
SF1-2 - IN	50.00	0°33'45"	50.00	0.16	0.04	25.00	33.33	16.67	144.26	5°21'45"
SF1-2 - OUT	50.00	0°33'45"	50.00	0.16	0.04	25.00	33.33	16.67	144.26	
SF1-3 - IN	50.00	0°33'45"	50.00	0.16	0.04	25.00	33.33	16.67	144.26	5°21'45"
SF1-3 - OUT	50.00	0°33'45"	50.00	0.16	0.04	25.00	33.33	16.67	144.26	
SF1-4 - IN	50.00	0°33'45"	50.00	0.16	0.04	25.00	33.33	16.67	144.26	5°21'45"
SF1-4 - OUT	50.00	0°33'45"	50.00	0.16	0.04	25.00	33.33	16.67	144.26	

SPIRAL DATA

SPIRAL	LS	θ	X	Y	P	K	LT	ST	TS	I
SHOOFLY TRACK 2										
SF2-1 - IN	50.00	0°33'45"	50.00	0.16	0.04	25.00	33.33	16.67	144.26	5°21'45"
SF2-1 - OUT	50.00	0°33'45"	50.00	0.16	0.04	25.00	33.33	16.67	144.26	
SF2-2 - IN	50.00	0°33'45"	50.00	0.16	0.04	25.00	33.33	16.67	144.26	5°21'45"
SF2-2 - OUT	50.00	0°33'45"	50.00	0.16	0.04	25.00	33.33	16.67	144.26	
SF2-3 - IN	50.00	0°33'45"	50.00	0.16	0.04	25.00	33.33	16.67	144.26	5°21'45"
SF2-3 - OUT	50.00	0°33'45"	50.00	0.16	0.04	25.00	33.33	16.67	144.26	
SF2-4 - IN	50.00	0°33'45"	50.00	0.16	0.04	25.00	33.33	16.67	144.26	5°21'45"
SF2-4 - OUT	50.00	0°33'45"	50.00	0.16	0.04	25.00	33.33	16.67	144.26	

SHOOFLY TRACK 701 GEOMETRY DATA (SF701)

CURVE NO.	DESC	BEARING	DISTANCE	STATION	STATION,OFFSET FROM MAIN TRACK 2	NORTHING	EASTING	Dc	RADIUS	△	L	T	Ea/Eu SPEED
	POB	S44°15'37"E	0.00	0+00.00	2793+43.58, 16.03' RT	2296441.755	6203616.910						
SF701-1	PC			0+00.00	2793+43.58, 16.03' RT	2296441.755	6203616.910						Ea=0" Eu=0.95"(F) V=15(F)
	PI				2793+93.49, 16.01' RT	2296406.013	6203651.740	6°00'00"	955.37	5°58'50"	99.72	49.91	
	PT	S50°14'27"E	393.48	0+99.72	2794+43.12, 10.79' RT	2296374.095	6203690.105						
*9 TO	PITO	S50°14'27"E	△ 30.17	4+93.20	2798+34.44, 30.34' LT	2296122.442	6203992.585						
	PS	S50°14'27"E	△ 12.21	△ 5+23.36	2798+64.44, 33.49' LT △	2296103.150 △	6204015.775 △						
SF701-2	PC			5+35.57	2798+76.58, 34.77' LT	2296095.341	6204025.161						Ea=0" Eu=0.95"(F) V=15(F)
	PI				2799+26.38, 40.00' LT	2296063.319	6204063.651	6°00'00"	955.37	6°00'00"	100.05	50.07	
	PT	S44°14'27"E	238.67	6+35.62	2799+76.45, 40.00' LT	2296027.449	6204098.582						
SF701-3	PC			8+74.29	2802+15.11, 40.00' LT	2295856.464	6204265.094						Ea=0" Eu=0.56"(F) V=20(F)
	PI				2803+49.28, 40.00' LT	2295760.347	6204358.697	2°00'00"	2864.93	5°21'45"	268.13	134.16	
	PT	S38°52'42"E	349.36	11+42.42	2804+82.85, 27.46' LT	2295655.903	6204442.908						
SF701-4	PC			14+91.78	2808+30.69, 5.19' RT	2295383.929	6204662.194						Ea=0" Eu=0.63"(F) V=20(F)
	PI				2809+49.43, 16.33' RT	2295291.089	6204737.049	2°15'00"	2546.64	5°21'45"	238.34	119.26	
	PT	S44°14'27"E	20.65	17+30.13	2810+68.69, 16.33' RT	2295205.650	6204820.253						
	POE			17+50.78	2810+89.34, 16.33' RT	2295190.859	6204834.670						

ROHR SPUR SHOOFLY TRACK GEOMETRY DATA (RSST)

CURVE NO.	DESC	BEARING	DISTANCE	STATION	NORTHING	EASTING	Dc	RADIUS	△	L	T	Ea/Eu SPEED
	POB	N86°09'50"E	136.63	2+65.82	2296302.627	6203216.050						
RSST-1	PC			4+02.45	2296311.768	6203352.375						Ea=0" Eu=0.95"(F) V=15(F)
	PI				2296329.418	6203615.614	6°00'00"	955.37	30°52'32"	514.83	263.83	
	PT	S62°57'38"E	7.21	9+17.28	2296209.480	6203850.606						
*9 TO	TPF			9+24.49	2296206.203	6203857.025						V=10(F)
	PITO				2296186.939	6203894.768						
	PS	S56°36'02"E	0.00	9+96.94 △	2296170.334 △	6203919.952 △						
	POE			9+96.94 △	2296170.334 △	6203919.952 △						

AS BUILT 1-20-10

PATTERSON & ASSOCIATES, INC. CIVIL ENGINEERING ENGINEERING
725 TOWN & COUNTRY ROAD SUITE 300 ORANGE, CA 92868

DMJM HARRIS | AECOM
999 Town & Country Road Orange, CA 92868
T 714.567.2501 F 714.567.2441

REGISTERED PROFESSIONAL ENGINEER MORTEZA GHANDEHARI No. C042150 EXP. 03/31/08 CIVIL STATE OF CALIFORNIA

MARK	REVISIONS	APPR.	DATE
△	Revised Sta. & Headings	F.M.	3/29/07

DESIGNED BY PM DRAWN BY SR CHECKED BY JLP

CITY OF RIVERSIDE, CALIFORNIA
PUBLIC WORKS DEPARTMENT

APPROVED BY	BY	DATE
PRINCIPAL ENGINEER	FM	12/18/06
CONST. CONTRACT ADMIN	[illegible]	11/16/06
STREET SERVICES	[illegible]	11/16/06
SURVEYOR	—	—
TRAFFIC DIVISION	[illegible]	1-3-07
PARKS DEPARTMENT	—	—

APPROVED BY [signature] CITY ENGINEER
DATE 12/18/06

JURUPA AVENUE UNDERPASS
PHASE II CONSTRUCTION

GEOMETRY DATA
SHEET 1 OF 2

SCALE: NONE

R-3634
RT-01

OCTOBER 9, 2006

10/7/06 3:18:45 PM J:\HA\PROJECTS\Jurupa\Drawings\1001rt01.sht

INDUSTRY TRACK I SHOOFLY GEOMETRY DATA (IST1)

CURVE NO.	DESC	BEARING	DISTANCE	STATION	NORTHING	EASTING	Dc	RADIUS	Δ	L	T	Ea/Eu SPEED
	POB			0+77.72	2296354.149	6203681.135						
	PC	S44°16'55"E	0.00	0+77.72	2296354.149	6203681.135						
IST1-1	PI				2296280.339	6203753.118	6°00'00"	955.37	12°19'07"	205.40	103.10	Ea=0" Eu=0.95"(F) V=15(F)
	PT			2+83.12	2296223.585	6203839.191						
		S56°36'02"E	66.57									
*9 TO	PITO			3+49.69	2296186.939	6203894.768						
		S56°36'02"E	△ 30.17									
	PS			△ 3+79.86	2296170.334 △	6203919.952 △						
		S56°36'02"E	△ 44.62									
	TPF			4+24.48	2296145.769	6203957.208						
*9 TO	PITO				2296122.442	6203992.585						V=10(F)
	PS			△ 4+96.94	2296103.150 △	6204015.775 △						
		S50°14'27"E	0.00									
	POE			△ 4+96.94	2296103.150 △	6204015.775 △						

REALIGNED ROHR SPUR TRACK GEOMETRY DATA (RRST)

CURVE NO.	DESC	BEARING	DISTANCE	STATION	NORTHING	EASTING	Dc	RADIUS	Δ	L	T	Ea/Eu SPEED
	POB			10+00.00	2296063.996	6203984.824						
		N44°14'45"W	0.00									
	PS			10+00.00	2296063.996	6203984.824						
*11 TO	PITO				2296086.405	6203962.997						V=15(F)
	TPF			10+82.95	2296120.046	6203923.684						
		N49°26'45"W	16.18									
RRST-1	PC			10+99.14	2296130.568	6203911.388						Ea=0" Eu=1.18"(F) V=15(F)
	PI				2296333.360	6203674.403	7°30'00"	764.49	44°23'25"	592.29	311.91	
	PT			16+91.43	2296312.493	6203363.195						
		S86°09'50"W	10.84									
	POE			17+02.28	2296311.768	6203352.375						

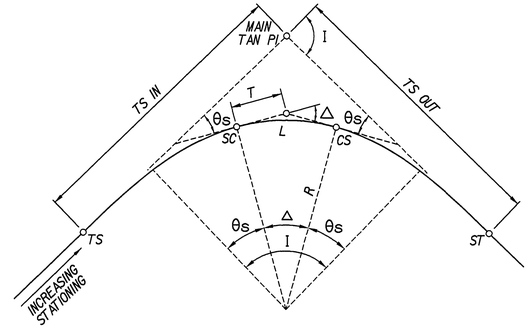

FIGURE A

CIRCULAR CURVES WITH SPIRAL TRANSITION

I - TOTAL INTERSECTION ANGLE

θs - SPIRAL ANGLE = $\frac{LS\ Dc}{200}$

Δ - CENTRAL ANGLE OF CIRCULAR CURVE = $I - 2\theta s$

R - RADIUS OF CIRCULAR CURVE

T - TANGENT LENGTH OF CIRCULAR CURVE = $R \tan\frac{\Delta}{2}$

L - LENGTH OF CIRCULAR CURVE = $\frac{\Delta}{Dc} \times 100$

TS - TANGENT TO SPIRAL

SC - SPIRAL TO CURVE

CS - CURVE TO SPIRAL

ST - SPIRAL TO TANGENT

MAIN TAN PI - POINT OF INTERSECTION OF MAIN TANGENTS

(TS IN)
(TS OUT) - TANGENT LENGTH OF COMPLETE CURVE = $(R+P)\tan\frac{1}{2} + K$

(WHEN SPIRALS OF EQUAL LENGTH ARE USED ON BOTH SIDES OF CIRCULAR CURVE, SEE FIGURE C. FOR P AND K).

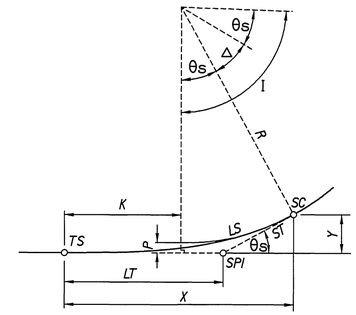

FIGURE C

SPIRAL TRANSITION CURVE

SPIRAL TRANSITION CURVE DATA:
THE SPIRAL USED IS DEFINED BY THE BARNETT SPIRAL.

LS = LENGTH OF SPIRAL (TS TO SC)

$d_s = \frac{\theta s\ \pi}{180}$ $\qquad \theta s = \frac{LS\ Dc}{200}$

$X = LS\left(1 - \frac{\delta_s^2}{10} + \frac{\delta_s^4}{216}\right)$

$Y = LS\left(\frac{\delta_s}{3} - \frac{\delta_s^3}{42}\right)$

$P = Y - R(1 - \cos\theta s)$

$K = X - R\sin\theta s$

$ST = \frac{Y}{\sin\theta s}$

$LT = X - \frac{Y}{\tan\theta s}$

$Dc = 2\sin^{-1}(50/R)$ = DEGREE OF CURVE (CHORD DEFINITION)

SPI - SPIRAL POINT OF INTERSECTION

NOTE: Dc, θs, Δ, AND I ARE IN DEGREES.
δ_s - EXPRESSED IN RADIANS.
ALL OTHERS DIMENSIONS ARE FEET.

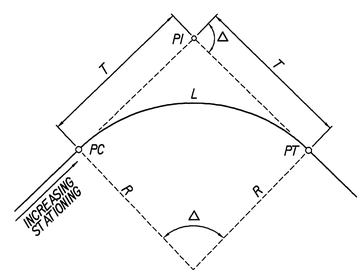

FIGURE B

SIMPLE CIRCULAR CURVE

R = RADIUS OF CIRCULAR CURVE

Δ = CENTRAL ANGLE OF CIRCULAR CURVE

$T = R\tan\frac{\Delta}{2}$

$L = \frac{\Delta}{Dc} \times 100$

$Dc = 2\sin^{-1}(50/R)$ = DEGREE OF CURVE (CHORD DEFINITION)

AS BUILT 1-20-10

PATTERSON & ASSOCIATES, INC. CIVIL-TRANSPORTATION ENGINEERING
725 TOWN & COUNTRY ROAD SUITE 300 ORANGE, CA 92868

DMJM HARRIS | AECOM
999 Town & Country Road Orange, CA 92868
T 714.567.2501 F 714.567.2441

REGISTERED PROFESSIONAL ENGINEER MORTEZA GHANDCHARI No. C042150 EXP. 03/31/08 CIVIL STATE OF CALIFORNIA

MARK	REVISIONS	APPR.	DATE
1	Revised Distance, Sta. & Headings	F.M.	8/29/07

DESIGNED BY PM DRAWN BY SR CHECKED BY JLP

CITY OF RIVERSIDE, CALIFORNIA
PUBLIC WORKS DEPARTMENT

APPROVED BY	BY	DATE
PRINCIPAL ENGINEER	F.M.	12/11/06
CONST. CONTRACT ADMIN	K.C.	11/14/06
STREET SERVICES	P.S.	11/14/06
SURVEYOR	—	—
TRAFFIC DIVISION	F.R.	11-2-06
PARKS DEPARTMENT	—	—

APPROVED BY
CITY ENGINEER
DATE 11/28/06

JURUPA AVENUE UNDERPASS
PHASE II CONSTRUCTION

GEOMETRY DATA
SHEET 2 OF 2

SCALE: NONE

R-3634
RT-02

OCTOBER 9, 2006

10/8/06 5:42:35 PM J:\H\PROJECTS\Jurupa\Drawings\1001rt02.sht