RIVERSIDE CALIFORNIA

PUBLIC WORKS DEPARTMENT

VICTORIA AVE BRIDGE SEISMIC RETROFIT

FEDERAL PROJECT NO. STPLZ-5058 (049)

GENERAL CONSTRUCTION NOTES:

1. CONSTRUCTION SHALL BE IN ACCORDANCE WITH THE CITY OF RIVERSIDE STANDARD DRAWINGS AND STANDARD SPECIFICATIONS FOR PUBLIC WORKS CONSTRUCTION, 1997 EDITION.
2. ALL ELEVATIONS SHOWN ON THE PLANS SHALL BE STAKED IN THE FIELD, EXCEPT FOR ELEVATIONS SHOWN IN PARENTHESIS WHICH DENOTE EXISTING GRADES.
3. EXISTING UTILITIES SHOWN ON THE PLANS, ARE PLOTTED FROM UTILITY RECORDS. THE CONTRACTOR IS REQUIRED TO TAKE DUE PRECAUTIONARY MEASURES TO LOCATE AND PROTECT ALL UTILITIES, WHETHER OR NOT SHOWN ON THESE PLANS.

CONSTRUCTION LEGEND:

- NUMBERS ABOVE 100 SHOWN IN A HEXAGON ON THE PLAN REFER TO THE RESPECTIVE STANDARD DRAWING AND SHALL BE CONSTRUCTED ACCORDINGLY, UNLESS MODIFICATIONS ARE NOTED ON THE PLAN. ANY NUMBER SHOWN BELOW THE STANDARD DRAWING NUMBER INDICATES THE SPECIFIC ALTERNATE TO BE CONSTRUCTED.
- 200 — REMOVE & RECONSTRUCT CURB AND GUTTER, TYPE 1
- 325 — REMOVE & RECONSTRUCT CONCRETE SIDEWALK
- 405 — CONSTRUCT CATCH BASIN
- C/S1 — CONSTRUCT STRUCTURAL SECTION OF 0.4' AC OVER 0.95' CAB.
- R/S1 — REMOVE & REPLACE EXISTING STRUCTURAL SECTION WITH 0.4' AC OVER 0.95 CAB.
- ADJ — ADJUST SEWER OR STORM DRAIN MANHOLE COVER TO GRADE.
- T — PACIFIC BELL TO BE PROTECTED IN PLACE.
- G — SO. CALIF. GAS CO. TO RELOCATE TEMPORARILY & REPLACE.

QUANTITY LIST

ITEM	UNIT	QUANTITY
Clearing and Grubbing	L.S.	
Mobilization	L.S.	
De-Mobilize / Re-Mobilize (Contingency)	DAY	180
Temporary Fence (F)	L.F.	514
Chain Link Gate (H = 6 ft)	Ea.	1
Chain Link Fence (H = 6 ft)	L.F.	275
Temporary Support	L.S.	
Traffic Control	L.S.	
Construction Area Signs	L.S.	
Salvage Luminaire (Bridge Mounted)	Ea.	12
Remove Unsound Concrete	L.S.	
Remove Barrier Railing (F)	L.F.	1,065
Bridge Removal (Portion) (F)	C.Y.	1,010
Structure Excavation (Bridge) (F)	C.Y.	1,305
Unclassified Excavation (F)	C.Y.	373
Structure Backfill (Bridge) (F)	C.Y.	809
36" Cast-in-Drilled-Hole Concrete Piling	L.F.	1,097
Structural Concrete, Bridge Footing (F)	C.Y.	493
Structural Concrete, Bridge (F)	C.Y.	1,706
Structural Concrete, Approach Slab (Type R) (F)	C.Y.	69
Concrete Surface Texture	L.S.	
Drill and Bond Dowel	L.F.	9,052
Drill and Bond Dowel (Epoxy Cartridge)	L.F.	965
Portland Cement Concrete (Patch)	L.S.	
Inject Crack (Epoxy)	L.F.	39
Core Concrete (2-1/4") and Pressure Grout	L.F.	351
Core Concrete (2-1/2") and Pressure Grout	L.F.	120
Core Concrete (3") and Bond Dowel	L.F.	470
Joint Seal Assembly (MR 2-1/2" -MR 4")	L.F.	177
Bar Reinforcing Steel (Bridge) (F)	Lb.	751,735
Miscellaneous Metal (Restrainer-Pipe Type) (F)	Lb.	2,824
Concrete Barrier (Custom) (F)	L.F.	1,140
Temporary Pedestrian Access	L.S.	
Water Pollution Control	L.S.	
Adjust Existing Manhole to Grade	Ea.	1
Grade North Slope	L.S.	
Crushed Aggregate Base	C.Y.	263
AC Pavement	TON	221
12-inch RCP	L.F.	41
18-inch RCP	L.F.	155
Catch Basin	Ea.	1
Junction Structure	Ea.	1
Headwall	Ea.	2
Concreted Rock Slope Protection (500 Lb. Class)(F)	S.F.	1,236
Concreted Rock Slope Protection (Facing Class)(F)	S.F.	2,476
Test Boring	L.S.	

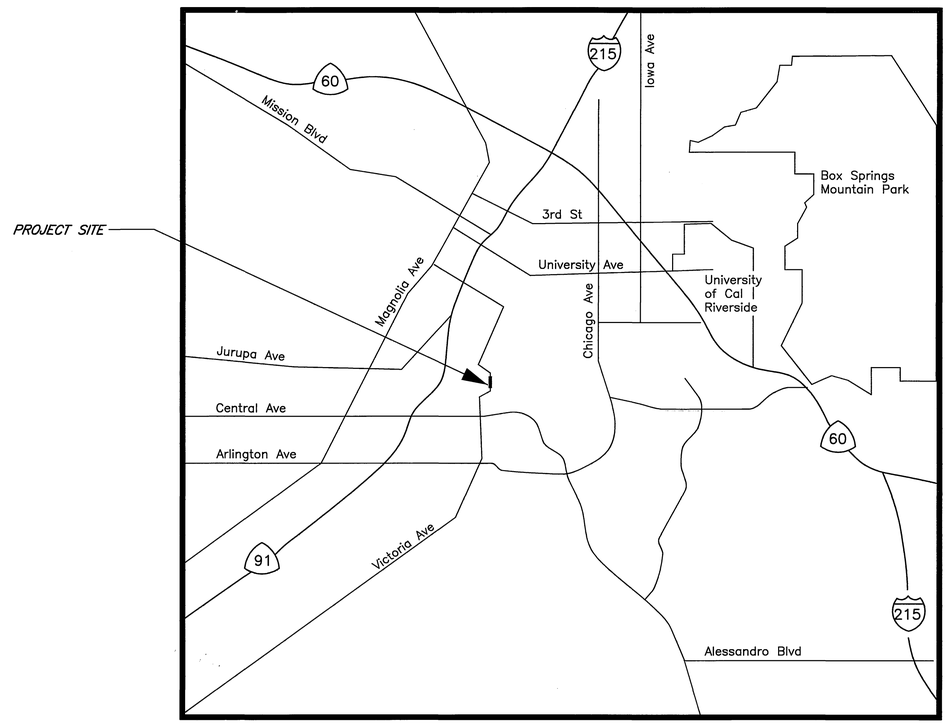

PROJECT LOCATION MAP

EXISTING UNDERGROUND UTILITIES:

- SANITARY SEWER — 8"S
- WATER LINE — 30"W
- CABLE LINE — CA TV
- GAS LINE — 3"G
- ABANDONED UTILITY — 6"W (ABAN'D.)
- TELEPHONE CONDUIT — T — T
- ELECTRICAL CONDUIT — E — E
- ELECTROLIER LIGHTING CONDUIT — ELC

EXISTING TOPOGRAPHY:

- BLOCK WALL
- BOARD FENCE
- WIRE FENCE
- CHAIN LINK FENCE
- SANITARY SEWER M.H.
- GV (GAS VALVE)
- ASPHALT
- TOP OF SLOPE
- TOE OF SLOPE
- DIRECTION OF FLOW

SHEET INDEX:

CIVIL PLANS

SHEET NO.	DESCRIPTION
1	TITLE SHEET
2	DETOUR PLAN
3	STREET IMPROVEMENT PLAN
4	FENCING DETAILS & SLOPE RESTORATION
5	CONCRETED ROCK SLOPE REHAB 1
6	CONCRETED ROCK SLOPE REHAB 2

STRUCTURAL PLANS

SHEET NO.	DESCRIPTION
7	GENERAL PLAN
8	DECK CONTOURS
9	FOUNDATION PLAN
10	CONCRETE STRENGTH & TYPE LIMITS
11-53	BRIDGE PLANS
54-56	DEMOLITION DETAILS
57	FALSEWORK DETAILS
58-59	TEMPORARY PEDESTRIAN ACCESS
60-62	LOG OF TEST BORINGS

NOTE:
UNDERGROUND ELECTRICAL FACILITIES WERE BEING CONSTRUCTED DURING THE PREPARATION OF THESE PLANS. THEREFORE "AS-BUILTS" WERE NOT AVAILABLE AND THESE FACILITIES ARE NOT SHOWN ON THE PLANS. PRIOR TO CONSTRUCTION "AS-BUILT" PLANS OF UNDERGROUND ELECTRICAL FACILITIES WILL BE MADE AVAILABLE TO THE CONTRACTOR (PLAN NO. U5-694295).

DESIGN OVERSIGHT
MICHAEL KATUSIAN
R.C.E. No. 36686 expires 6/30/04
DATE 4/14/04

REGISTERED PROFESSIONAL ENGINEER MICHAEL KATUSIAN No. 36686 Exp. 6-30-04 CIVIL STATE OF CALIFORNIA

ENGINEER IN RESPONSIBLE CHARGE
TODD DUDLEY
R.C.E. No. 39514 expires 12/31/05
DATE 4/14/04

REGISTERED PROFESSIONAL ENGINEER TODD DUDLEY No. 39514 Exp. 12-31-05 CIVIL STATE OF CALIFORNIA

MARK	REVISIONS	APPR.	DATE

DESIGNED BY ____ DRAWN BY LFH CHECKED BY ____

CITY OF RIVERSIDE, CALIFORNIA
PUBLIC WORKS DEPARTMENT

APPROVED BY	BY	DATE
PRINCIPAL ENGINEER		
TRAFFIC DIVISION		
SURVEYOR		
STREET SERVICES		
INSPECTION		

APPROVED BY
DEPUTY PUBLIC WORKS DIRECTOR/ CITY ENGINEER
DATE 4/14/04

VICTORIA AVENUE BRIDGE SEISMIC RETROFIT
TITLE SHEET

HORIZ. SCALE: VERT. SCALE:

ACCT. NO.: 9533728711-440121XX

R-3671

SHEET 1 OF 62

FILE NO.

INDEXED 12-6-04 LH

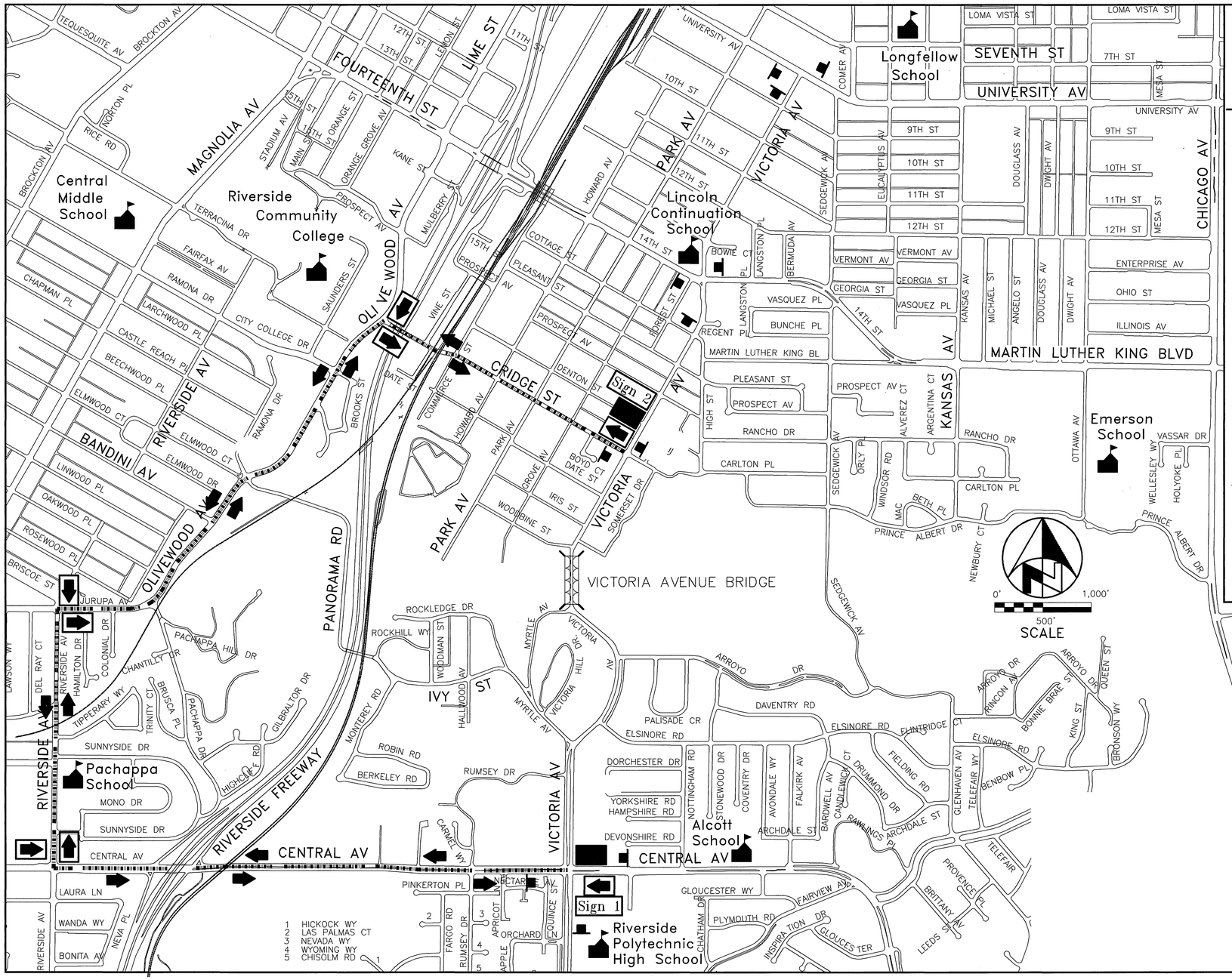

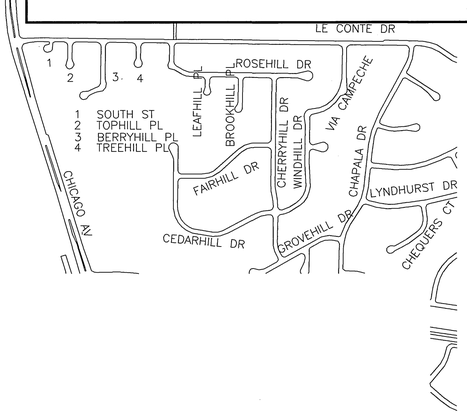

LEGEND

SYMBOL	SIGN TEXT
	ROAD CLOSED XXX FEET AHEAD BEYOND HERE, LOCAL TRAFFIC ONLY 8" High Letters
	VICTORIA AVENUE DETOUR 6" High Letters
	DETOUR SC3
Sign 1	Use Central Ave. to Riverside Ave. to Jurupa Ave./Olivewood Ave. to Cridge St. 6" High Letters
Sign 2	Use Cridge St. to Olivewood Ave./ Jurupa Ave. to Riverside Ave. to Central Ave. 6" High Letters
Advisory Sign	VICTORIA AVENUE BRIDGE CLOSED (MONTH 03 THRU MONTH 04) 8" High Letters
	SCHOOL

1 HICKOCK WY
2 LAS PALMAS CT
3 NEVADA WY
4 WYOMING WY
5 CHISOLM RD

DESIGN OVERSIGHT

MICHAEL KATUSIAN
R.C.E. No. 36686 expires 6/30/04
DATE 12/20/02

REGISTERED PROFESSIONAL ENGINEER MICHAEL KATUSIAN No. 36686 Exp. 6-30-04 CIVIL STATE OF CALIFORNIA

MARK	REVISIONS	APPR.	DATE

DESIGNED BY _____ DRAWN BY LFH CHECKED BY _____

CITY OF RIVERSIDE, CALIFORNIA
PUBLIC WORKS DEPARTMENT

APPROVED BY	BY	DATE
PRINCIPAL ENGINEER		12/20
TRAFFIC DIVISION		
SURVEYOR		12/20/02
STREET SERVICES		
INSPECTION		

APPROVED BY
PUBLIC WORKS DIRECTOR
DATE 12/20/02

VICTORIA AVENUE BRIDGE
SEISMIC RETROFIT
TRAFFIC DETOUR PLAN

HORIZ. SCALE: VERT. SCALE:

ACCT. NO.: 9533728711-440121XX

R-3671
SHEET 2 OF 62

FILE NO.

INDEXED 12-6-04 LH

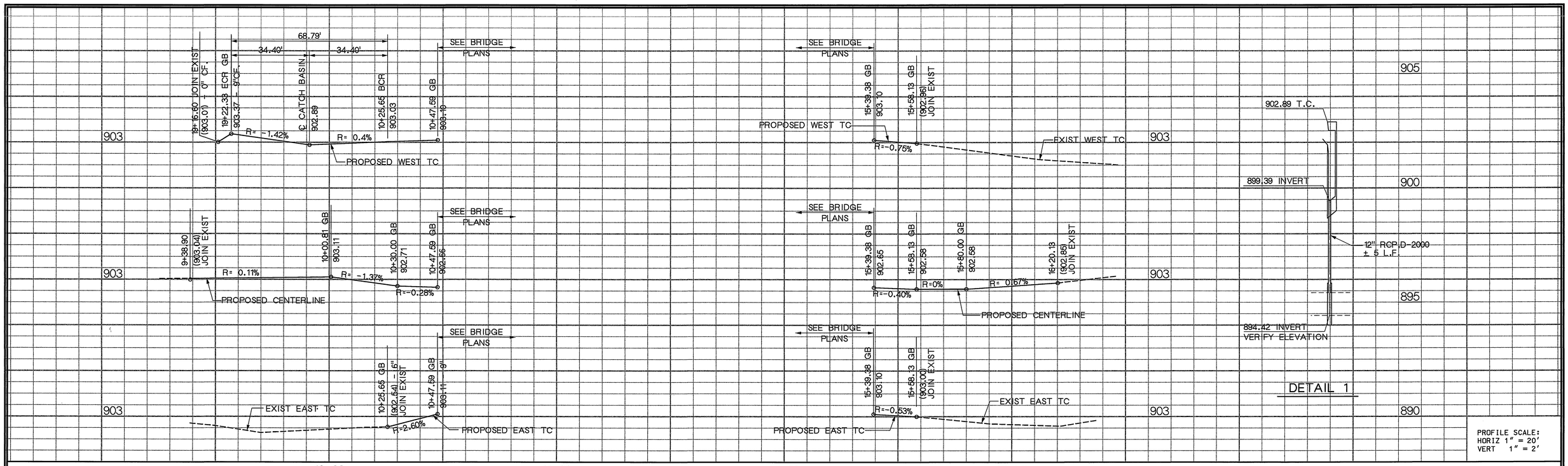

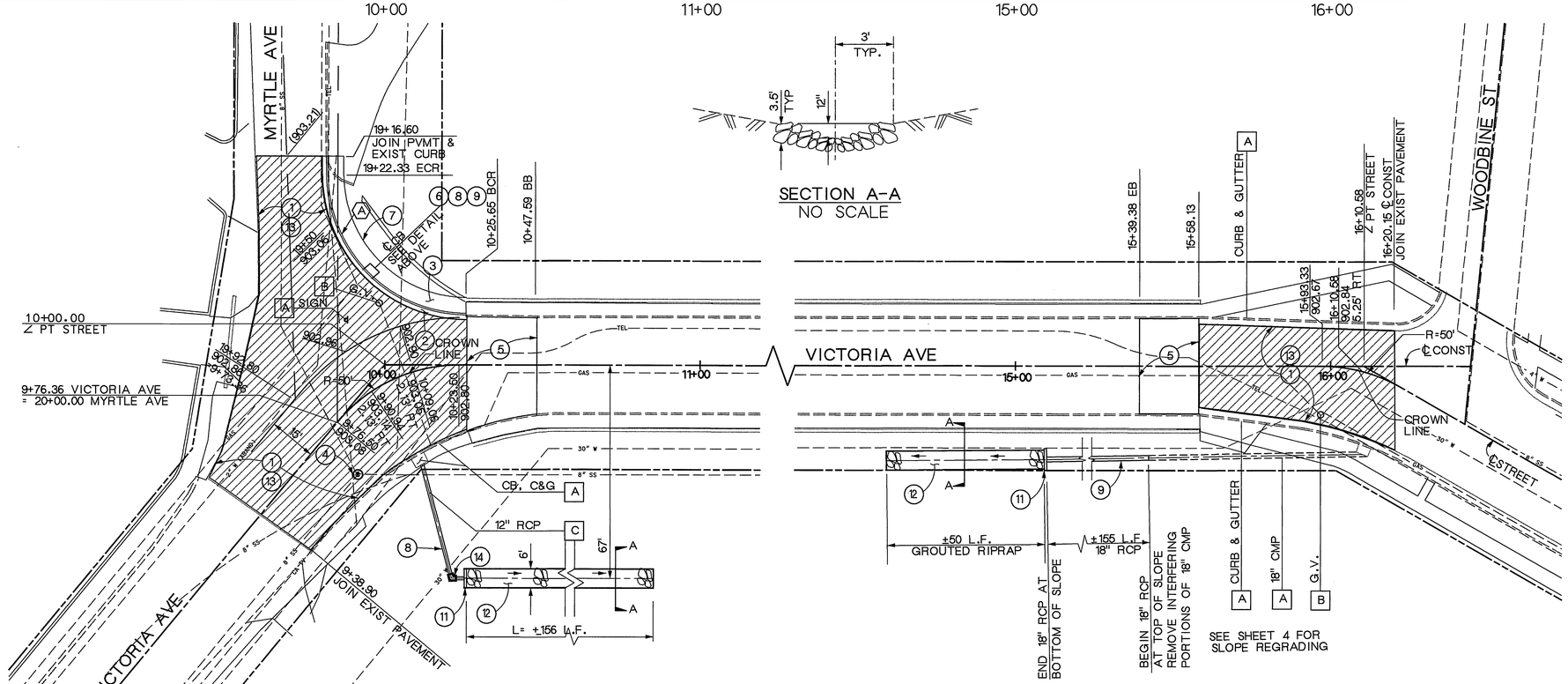

CURVE DATA				
NO	△	L (FT)	R (FT)	T (FT)
A	89°34'14"	68.79	44.00	43.67

CONSTRUCTION NOTES

1. REMOVE EXISTING PAVEMENT AND CONSTRUCT 0.4 FT DENSE GRADED AC OVER 0.95 FT OF CRUSHED AGGREGATE BASE.
2. REMOVE AND RECONSTRUCT CURB AND GUTTER TYPE I PER CITY OF RIVERSIDE STD DWG NO. 200.
3. REMOVE AND RECONSTRUCT CONCRETE SIDEWALK PER CITY OF RIVERSIDE STD DWG NO. 325.
4. ADJUST MANHOLE/VAULT TO GRADE.
5. CONSTRUCT APPROACH SLAB PER BRIDGE PLAN.
6. CONSTRUCT CATCH BASIN PER CITY OF RIVERSIDE STD DWG NO. 405, W = 4 FT, V = 3.5 FT. CONNECTOR PIPE TO OUTLET FROM BOTTOM OF CATCH BASIN.
7. CONSTRUCT CONCRETE HAND RAILING AT BACK OF SIDEWALK PER BRIDGE PLANS.
8. CONSTRUCT 12" RCP, 2000 D W/ 1' MIN COVER.
9. CONSTRUCT 18" RCP, 2000 D W/ 1' MIN COVER.
10. CONSTRUCT JUNCTION STRUCTURE PER APWA STD PLAN 331-2.
11. CONSTRUCT SINGLE CONCRETE HEADWALL, H = 3'-2", PER CALTRANS STD D89.
12. CONSTRUCT ¼ TON GROUTED RIPRAP PER SECTION "A-A" FROM STORM DRAIN OUTLET TO TOE OF SLOPE.
13. REINSTALL EXISTING PAVEMENT STRIPING.
14. CONSTRUCT CONCRETE COLLAR PER APWA STD PLAN NO 380-2

DISPOSITION NOTES

- A PROTECT IN PLACE
- B TO BE ADJUSTED TO GRADE BY THE GAS COMPANY
- C REMOVE

20' 10' 0' 20' 40'
PLOT HORIZONTAL SCALE: 1" = 20'

DESIGN OVERSIGHT
MICHAEL KATUSIAN
R.C.E. No. 36686 expires 6/30/00
DATE 12/20/02

REGISTERED PROFESSIONAL ENGINEER MICHAEL KATUSIAN No. 36686 Exp. 6-30-04 CIVIL STATE OF CALIFORNIA

MARK	REVISIONS	APPR.	DATE

DESIGNED BY: DRAWN BY: CHECKED BY:

CITY OF RIVERSIDE, CALIFORNIA
PUBLIC WORKS DEPARTMENT

APPROVED BY	BY	DATE
PRINCIPAL ENGINEER		12/20/02
TRAFFIC DIVISION		
PARKS DEPARTMENT		
INSPECTION		
SURVEYOR		

APPROVED BY: PUBLIC WORKS DIRECTOR
DATE: 12/20/02

VICTORIA AVENUE BRIDGE SEISMIC RETROFIT
STREET IMPROVEMENT PLAN

HORIZ. SCALE: 1" = 20' VERT. SCALE: 1" = 2'

ACCT. NO. 9633728711-44012VOX
R-3671
SHEET 3 OF 62
FILE NO.

INDEXED 12-6-04 LH

Notes:

1. Height of gate shall be 6'-0". Gate opening shall be 15'-0". Gate shall be installed perpendicular across existing driveway.

2. Temporary chain link fencing shall be 6'-0" in height. Temporary fencing shall be placed along construction easment boundry (R/W) where shown.

3. The Contractor shall maintain temporary chain link gate and temporary chain link fencing in place for the duration of the construction project. Following completion of the Victoria Avenue construction the Contractor shall relocate portions of the temporary fencing along the R/W line and the southerly property line at the direction of the Engineer.

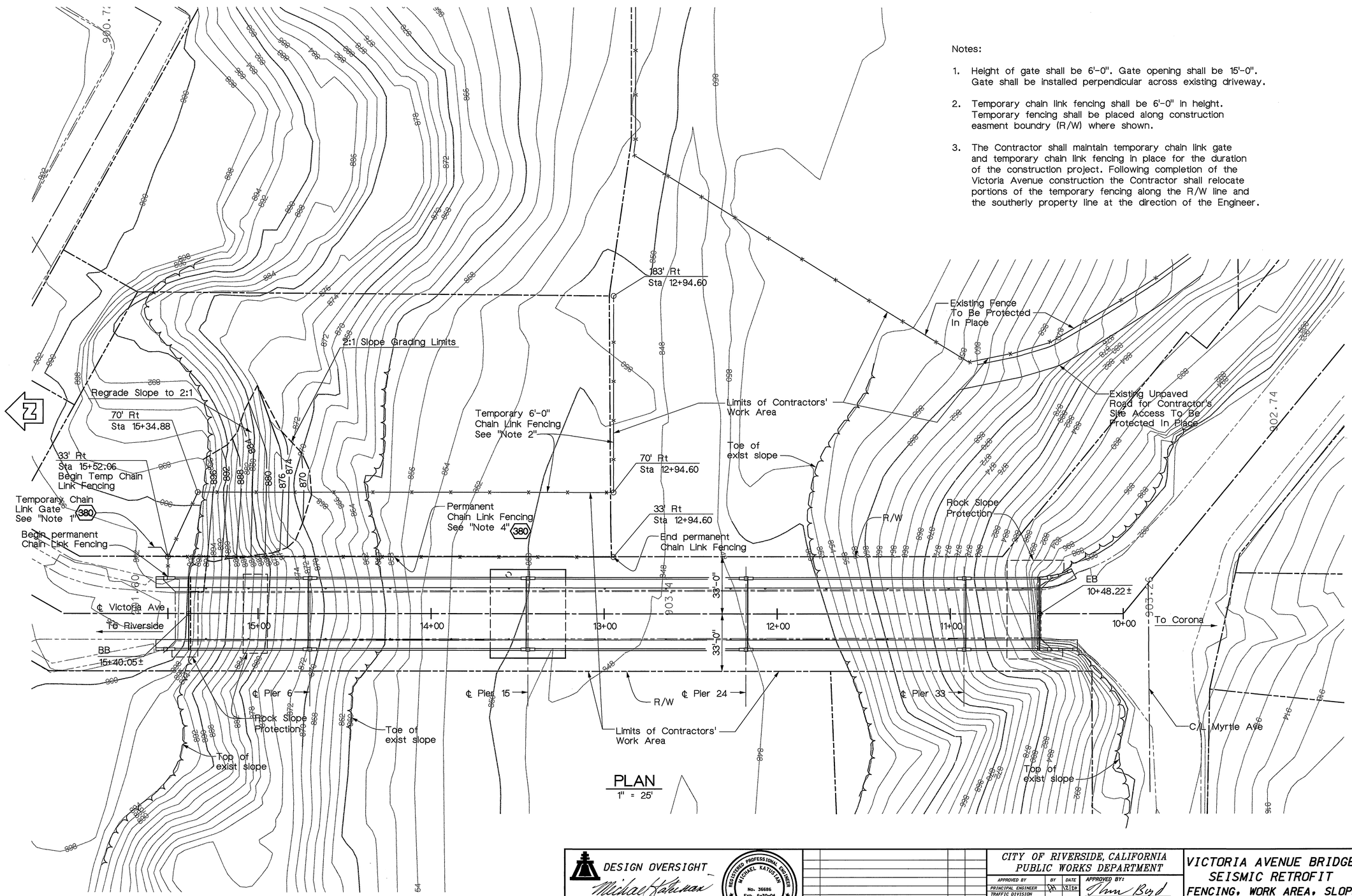

PLAN
1" = 25'

ORIGINAL SCALE IN INCHES FOR REDUCED PLANS 0 1 2 3

DESIGN OVERSIGHT

Michael Katusian

MICHAEL KATUSIAN
R.C.E. No. 36686 expires 6/30/04
DATE 12/20/02

REGISTERED PROFESSIONAL ENGINEER MICHAEL KATUSIAN No. 36686 Exp. 6-30-04 CIVIL STATE OF CALIFORNIA

MARK	REVISIONS	APPR.	DATE

DESIGNED BY: DRAWN BY: CHECKED BY:

CITY OF RIVERSIDE, CALIFORNIA
PUBLIC WORKS DEPARTMENT

APPROVED BY	BY	DATE
PRINCIPAL ENGINEER		12/20
TRAFFIC DIVISION		
PARKS DEPARTMENT		
INSPECTION		
SURVEYOR		

APPROVED BY: Thm Boyd
PUBLIC WORKS DIRECTOR
DATE: 12/20/02

VICTORIA AVENUE BRIDGE SEISMIC RETROFIT
FENCING, WORK AREA, SLOPE RESTORATION AND ACCESS

HORIZ. SCALE: 1" = 20' VERT. SCALE: 1" = 20'

ACCT. NO. 9633728711-4401210X

R-3671

SHEET 4 OF 62

FILE NO.

INDEXED 12-6-04 LH

DIST	COUNTY	ROUTE	POST MILES TOTAL PROJECT	SHEET NO.	TOTAL SHEETS
8	Riv	LOC			

REGISTERED CIVIL ENGINEER

12/20/02
PLANS APPROVAL DATE

REGISTERED PROFESSIONAL ENGINEER
T.W. DUDLEY
No. 39514
Exp. 12/31/05
CIVIL
STATE OF CALIFORNIA

CITY OF RIVERSIDE
DEPARTMENT OF PUBLIC WORKS
3900 Main Street
Riverside, California 92522

LIM & NASCIMENTO ENGINEERING
12 Mauchly, Bldg L
Irvine, California 92618

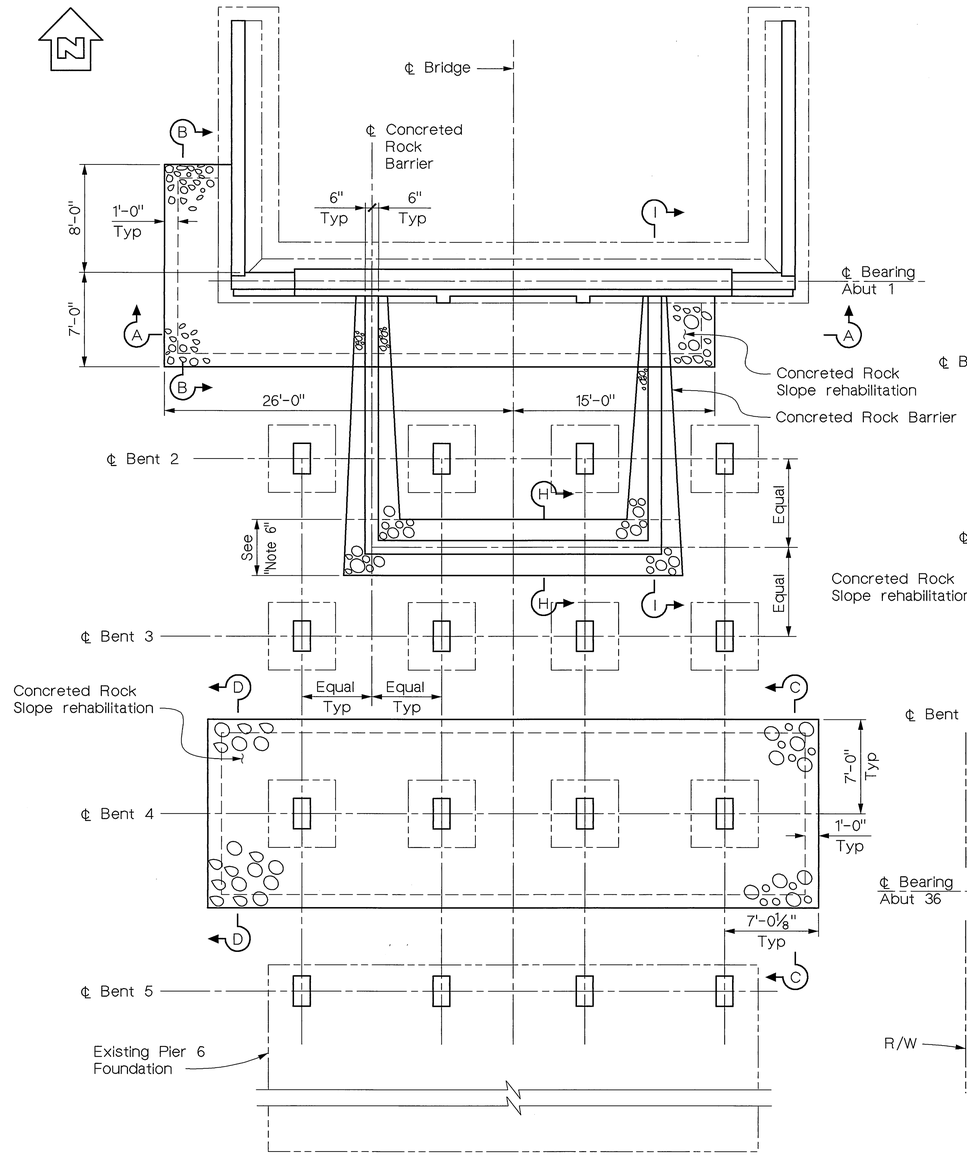

NORTH APPROACH

PLAN

3/16" = 1'-0"

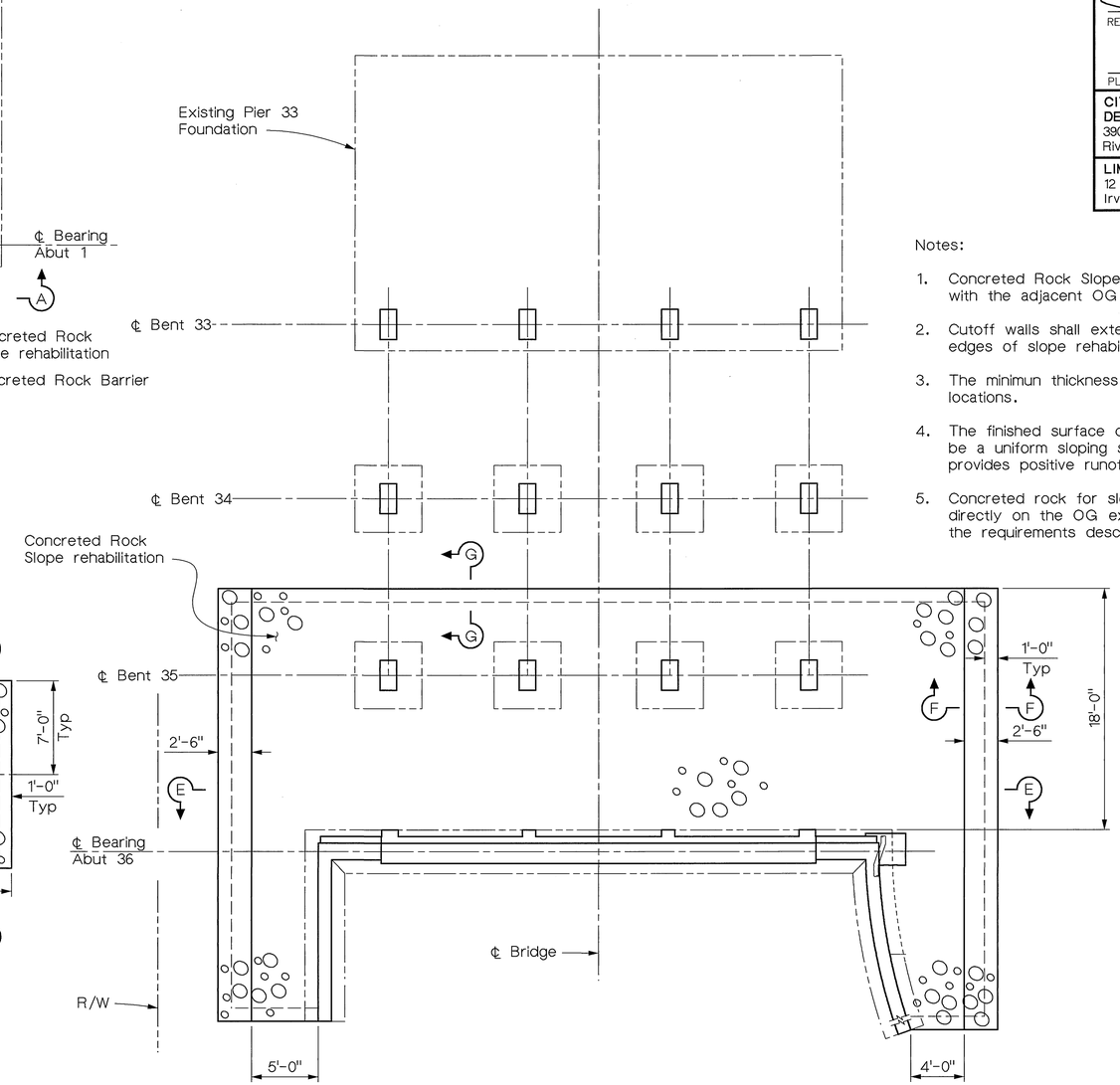

SOUTH APPROACH

PLAN

3/16" = 1'-0"

Notes:

1. Concreted Rock Slope rehabilitation shall be constructed flush with the adjacent OG at all perimeter edges.
2. Cutoff walls shall extend 2'-0" below adjacent OG at all perimeter edges of slope rehabilitation.
3. The minimun thickness of concreted rock shall be 1'-0" at all locations.
4. The finished surface of concreted rock slope rehabilitation shall be a uniform sloping surface, which resists ponding water and provides positive runoff.
5. Concreted rock for slope rehabilitation construction may be placed directly on the OG except where excavations are required to meet the requirements described in notes 1 thruough 4, above.
6. Foundation of Concreted Rock Barrier shall be embedded below the surface of the existing ground where shown on the Plans. At other locations the barrier may be constructed on top of the existing ground surface.
7. See "Concreted Rock Slope Rehab 2" sheet for sections not shown here.

Note:
The Contractor shall verify all controlling field dimensions before ordering or fabricating any material.

MIKE KATUSIAN
DESIGN OVERSIGHT
12/20/02
SIGN OFF DATE

	BY	CHECKED
DESIGN	M. CHAR	T.W. DUDLEY
DETAILS	E. GIROD	T.W. DUDLEY
QUANTITIES	N. MORCILLO	Y. KIM

CITY OF RIVERSIDE

G.J. NASCIMENTO
PROJECT ENGINEER

BRIDGE NO. 56C-55
POST MILE

VICTORIA AVENUE BRIDGE
SEISMIC RETROFIT
CONCRETED ROCK SLOPE REHAB 1

ORIGINAL SCALE IN INCHES FOR REDUCED PLANS 0 1 2 3

CU
EA

DISREGARD PRINTS BEARING EARLIER REVISION DATES →

REVISION DATES (PRELIMINARY STAGE ONLY)

SHEET 5 OF 62

INDEXED 12-6-04 LH

DIST	COUNTY	ROUTE	POST MILES TOTAL PROJECT	SHEET NO.	TOTAL SHEETS
8	Riv	LOC			

REGISTERED CIVIL ENGINEER

12/20/02
PLANS APPROVAL DATE

REGISTERED PROFESSIONAL ENGINEER T.W. DUDLEY No. 39514 Exp. 12/31/05 CIVIL STATE OF CALIFORNIA

CITY OF RIVERSIDE
DEPARTMENT OF PUBLIC WORKS
3900 Main Street
Riverside, California 92522

LIM & NASCIMENTO ENGINEERING
12 Mauchly, Bldg L
Irvine, California 92618

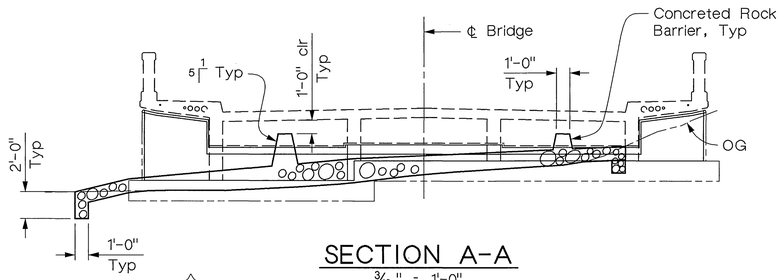

SECTION A-A
3/16" = 1'-0"

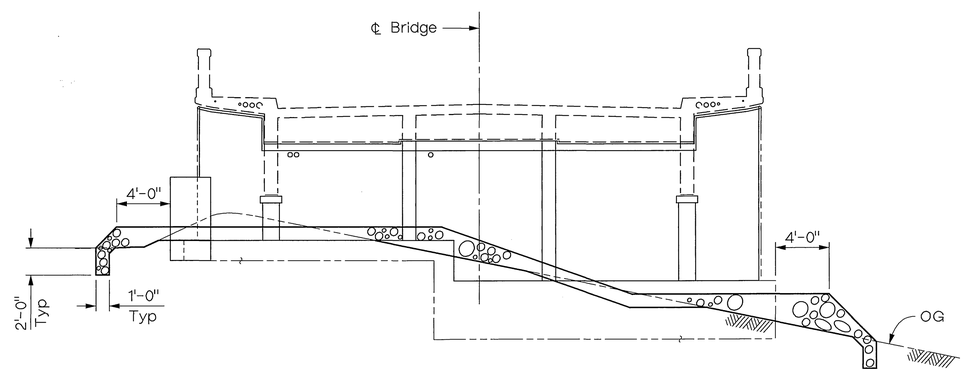

SECTION E-E
3/16" = 1'-0"

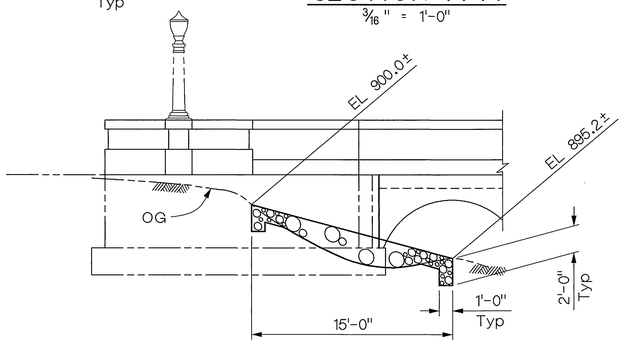

Abut 1

NORTH APPROACH

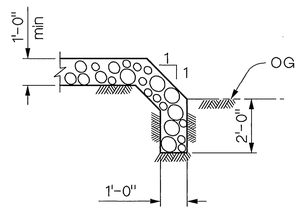

SECTION F-F
3/16" = 1'-0"

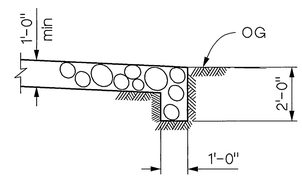

SECTION G-G
3/16" = 1'-0"

LEGEND

Denotes Concreted Rock

Note:

1. For "Notes 6 and 7" see "Concreted Rock Slope Rehab 1" sheet.

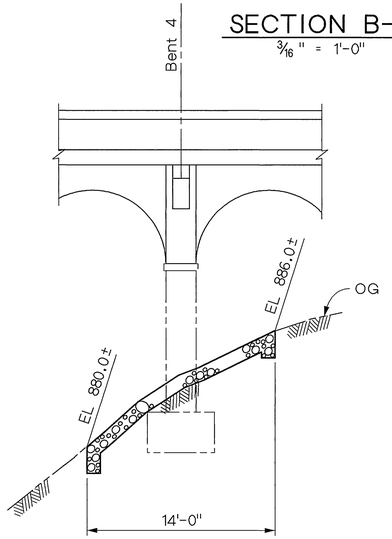

SECTION B-B
3/16" = 1'-0"

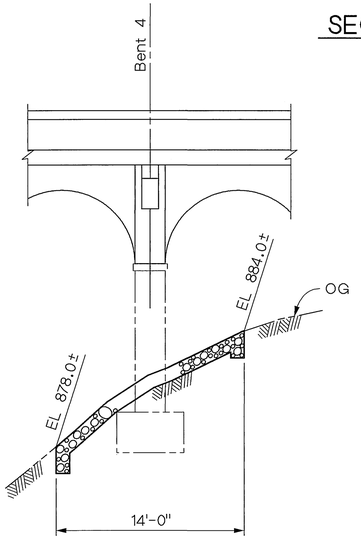

SECTION C-C
3/16" = 1'-0"

SECTION D-D
3/16" = 1'-0"

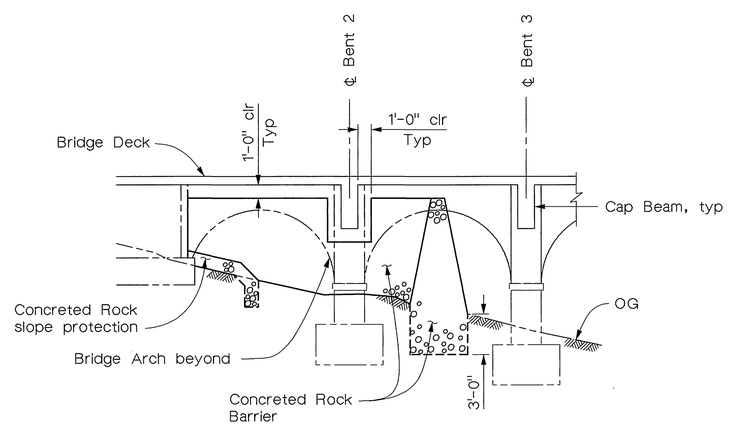

SECTION I-I
3/16" = 1'-0"

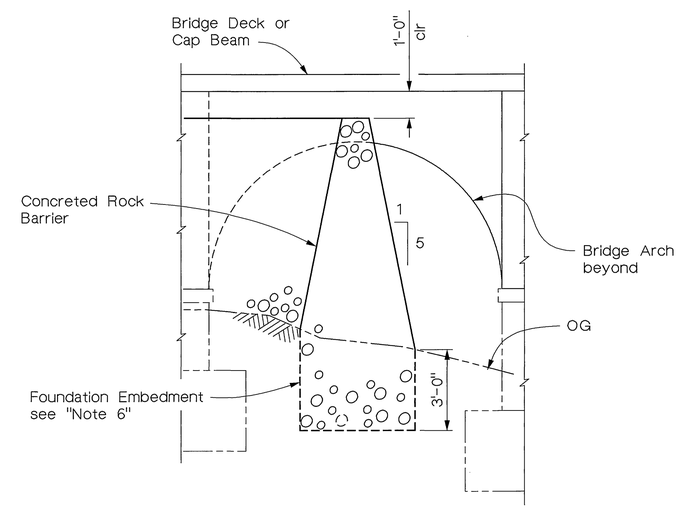

SECTION H-H
3/8" = 1'-0"

Note:
The Contractor shall verify all controlling field dimensions before ordering or fabricating any material.

MIKE KATUSIAN
DESIGN OVERSIGHT
12/20/02
SIGN OFF DATE

	BY	CHECKED
DESIGN	T.W. DUDLEY	M. CHAR
DETAILS	E. GIROD	T.W. DUDLEY
QUANTITIES	V. SIVAKKOLUNDU	Y. KIM

CITY OF RIVERSIDE

G.J. NASCIMENTO
PROJECT ENGINEER

BRIDGE NO. 56C-55
POST MILE

VICTORIA AVENUE BRIDGE
SEISMIC RETROFIT
CONCRETED ROCK SLOPE REHAB 2

ORIGINAL SCALE IN INCHES FOR REDUCED PLANS 0 1 2 3

CU
EA

DISREGARD PRINTS BEARING EARLIER REVISION DATES →

REVISION DATES (PRELIMINARY STAGE ONLY)

SHEET 6 OF 62

INDEXED 12-6-04 GH

DIST	COUNTY	ROUTE	POST MILES TOTAL PROJECT	SHEET NO.	TOTAL SHEETS
8	Riv	LOC			

REGISTERED CIVIL ENGINEER

12/20/02
PLANS APPROVAL DATE

REGISTERED PROFESSIONAL ENGINEER T.W. DUDLEY No. 39514 Exp. 12/31/05 CIVIL STATE OF CALIFORNIA

CITY OF RIVERSIDE
DEPARTMENT OF PUBLIC WORKS
3900 Main Street
Riverside, California 92522

LIM & NASCIMENTO ENGINEERING
12 Mauchly, Bldg L
Irvine, California 92618

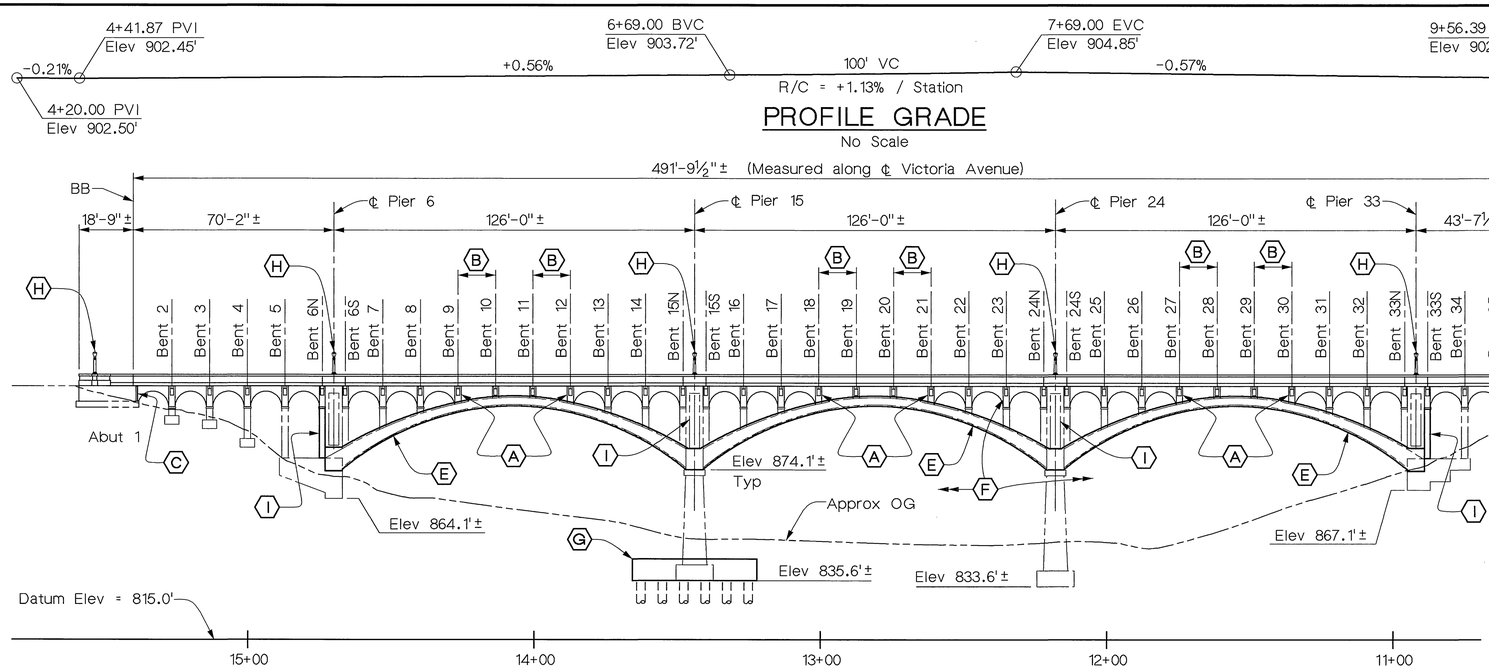

PROFILE GRADE

No Scale

ELEVATION

1" = 25'

RETROFIT LEGEND

- (A) Transverse Infill Wall at Bents 9, 12, 18, 21, 27 and 30
- (B) Longitudinal Spandrel Wall at Interior Ribs
- (C) Abutment Wall Overlay
- (D) Replace entire Deck, Sidewalk & Railing
- (E) Strengthen Arch Ribs: Continuous - Exterior, Portion - Interior
- (F) Column Replacement (Portion) (All Columns)
- (G) Foundation Retrofit (CIDH Conc Piling)
- (H) Salvage & reinstall Exist Light Standards
- (I) Shear Wall at Bents 6N and 33S and Piers 15 and 24
- (J) Approach Slab @ Abutments

Notes:

1. Existing gas line to be protected in place except where otherwise shown. The Contractor shall install new straps (provided by The Gas Company) to attach gas line to bridge as a part of bridge retrofit construction.
2. Existing gas line temporary removal limit.

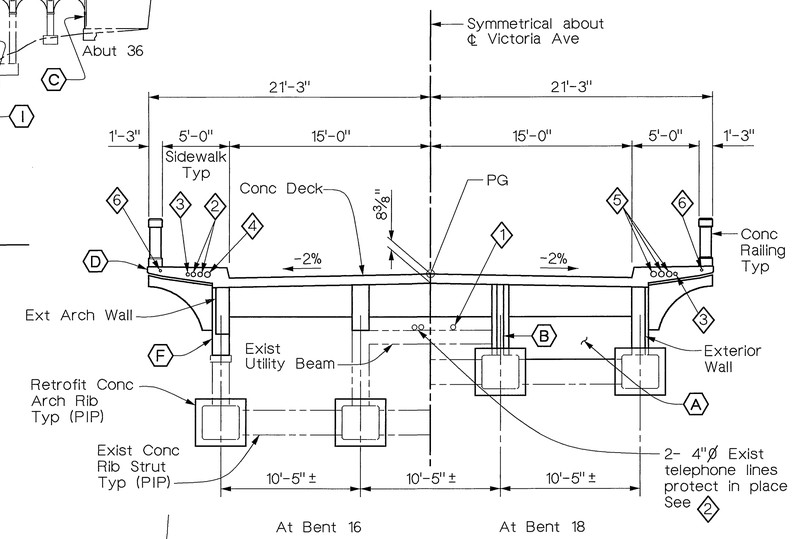

TYPICAL SECTION

3/16" = 1'-0"

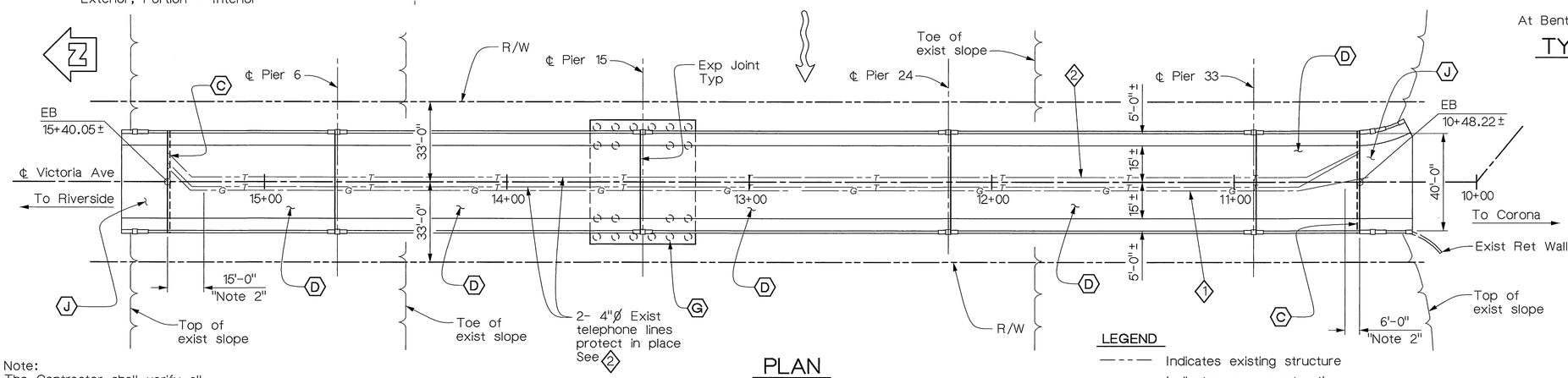

PLAN

1" = 25'

Note:
The Contractor shall verify all controlling field dimensions before ordering or fabricating any material.

LEGEND

- Indicates existing structure
- Indicates new construction
- Indicates direction of flow

UTILITY LEGEND

- (1) 3"Ø± Exist Gas Line (See "Note 1")
- (2) 2 - 4"Ø± Exist Telephone Line
- (3) 1 - 2"Ø Conduit (Future Utility)
- (4) 1 - 5"Ø Conduit (Future Utility)
- (5) 3 - 5"Ø Conduit (Future Utility)
- (6) 1 - 1"Ø Street Light Conduit

VICTORIA AVENUE BRIDGE
SEISMIC RETROFIT
GENERAL PLAN

MIKE KATUSIAN, DESIGN OVERSIGHT, 12/20/02, SIGN OFF DATE	DESIGN	BY H. FEILEN	CHECKED T.W. DUDLEY				
	DETAILS	BY R. ANDRASEK	CHECKED T.W. DUDLEY	LAYOUT	BY R. ANDRASEK	CHECKED T.W. DUDLEY	
	QUANTITIES	BY N. MORCILLO	CHECKED Y. KIM	SPECIFICATIONS	BY T.W. DUDLEY	PLANS AND SPECS COMPARED	

CITY OF RIVERSIDE

G.J. NASCIMENTO, PROJECT ENGINEER

BRIDGE NO. 56C-55
POST MILE

ORIGINAL SCALE IN INCHES FOR REDUCED PLANS 0 1 2 3

CU
EA

DISREGARD PRINTS BEARING EARLIER REVISION DATES →

REVISION DATES (PRELIMINARY STAGE ONLY)

SHEET 7 OF 62

INDEXED 12-6-04 LFH

DIST	COUNTY	ROUTE	POST MILES TOTAL PROJECT	SHEET NO.	TOTAL SHEETS
8	Riv	LOC			

REGISTERED CIVIL ENGINEER

12/20/02
PLANS APPROVAL DATE

REGISTERED PROFESSIONAL ENGINEER
T.W. DUDLEY
No. 39514
Exp. 12/31/05
CIVIL
STATE OF CALIFORNIA

CITY OF RIVERSIDE
DEPARTMENT OF PUBLIC WORKS
3900 Main Street
Riverside, California 92522

LIM & NASCIMENTO ENGINEERING
12 Mauchly, Bldg L
Irvine, California 92618

LEGEND

X = Indicates 10' intervals along ℄ Victoria Ave

[1] Indicates one-half foot contours

Contour interval is 0.10'
Contours do not include camber

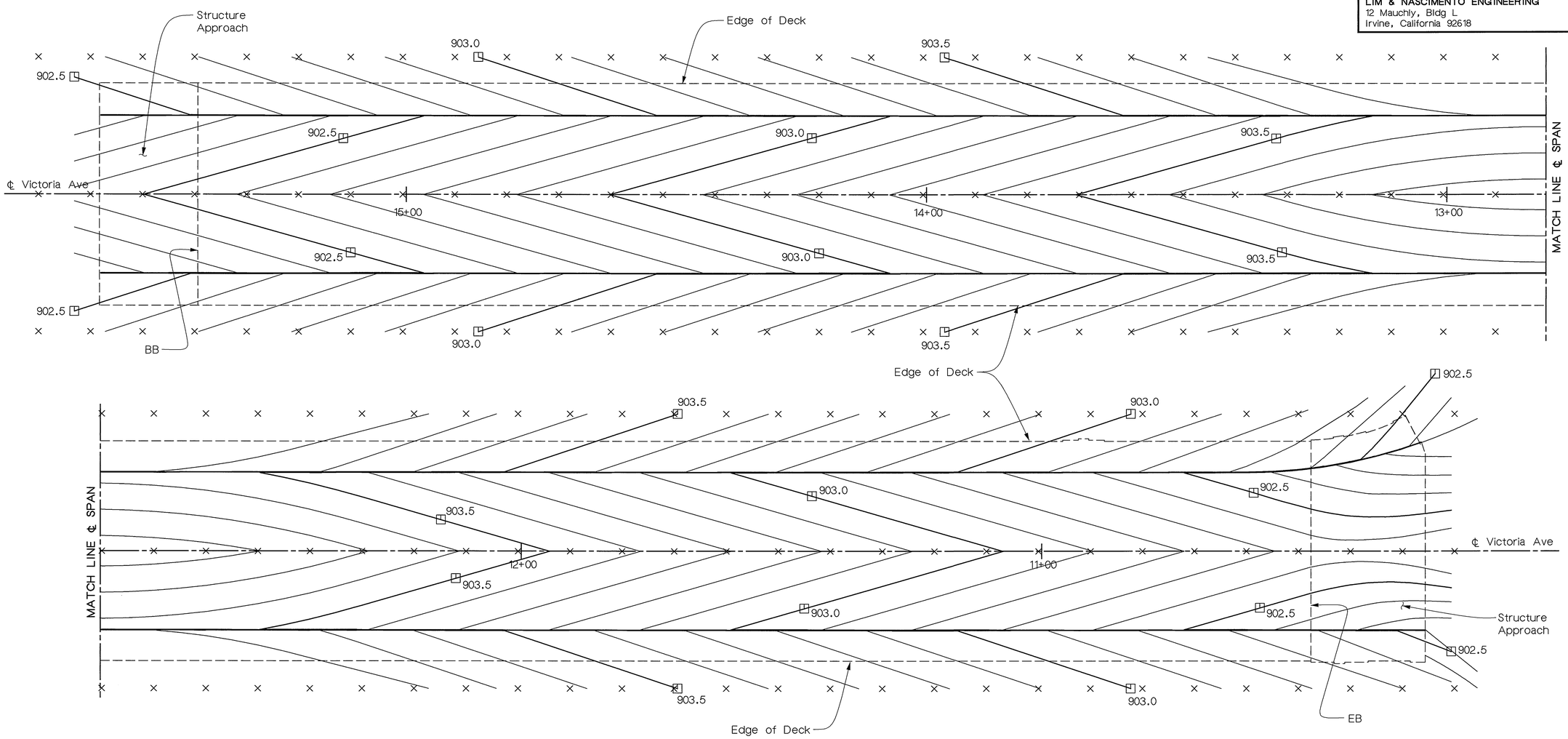

PLAN
1" = 10'

Note:
The Contractor shall verify all controlling field dimensions before ordering or fabricating any material.

MIKE KATUSIAN DESIGN OVERSIGHT 12/20/02 SIGN OFF DATE	DESIGN	BY M. CHAR	CHECKED T.W. DUDLEY	CITY OF RIVERSIDE	G.J. NASCIMENTO PROJECT ENGINEER
	DETAILS	BY R. ANDRASEK	CHECKED T.W. DUDLEY		
	QUANTITIES	BY N. MORCILLO	CHECKED Y. KIM		

ORIGINAL SCALE IN INCHES FOR REDUCED PLANS 0 1 2 3

CU
EA

BRIDGE NO. 56C-55
POST MILE

VICTORIA AVENUE BRIDGE
SEISMIC RETROFIT
DECK CONTOURS

DISREGARD PRINTS BEARING EARLIER REVISION DATES →

REVISION DATES (PRELIMINARY STAGE ONLY)

SHEET 8 OF 62

INDEXED 12-6-04 HH

DIST	COUNTY	ROUTE	POST MILES TOTAL PROJECT	SHEET NO.	TOTAL SHEETS
8	Riv	LOC			

REGISTERED CIVIL ENGINEER

12/20/02
PLANS APPROVAL DATE

REGISTERED PROFESSIONAL ENGINEER T.W. DUDLEY No. 39514 Exp. 12/31/05 CIVIL STATE OF CALIFORNIA

CITY OF RIVERSIDE
DEPARTMENT OF PUBLIC WORKS
3900 Main Street
Riverside, California 92522

LIM & NASCIMENTO ENGINEERING
12 Mauchly, Bldg L
Irvine, California 92618

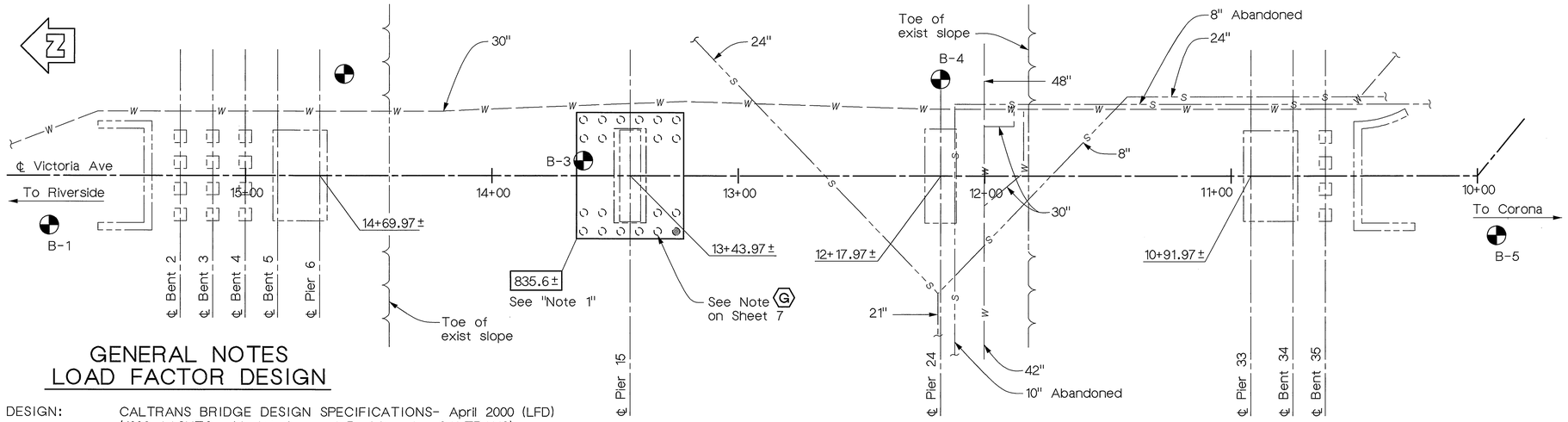

FOUNDATION PLAN
1" = 25'

GENERAL NOTES
LOAD FACTOR DESIGN

DESIGN: CALTRANS BRIDGE DESIGN SPECIFICATIONS- April 2000 (LFD) (1996 AASHTO with Interims and Revisions by CALTRANS)

DEAD LOAD: Includes 35 psf for future wearing surface.

SEISMIC DESIGN: CALTRANS Seismic Design Criteria (SDC) version 1.1 July, 1999.

SEISMIC LOADING: SDC Fig. B-8 ARS curve for soil profile D (M=7.25±0.25) PRA= 0.4g

LIVE LOAD: HS20-44, Permit and Alternative Loading

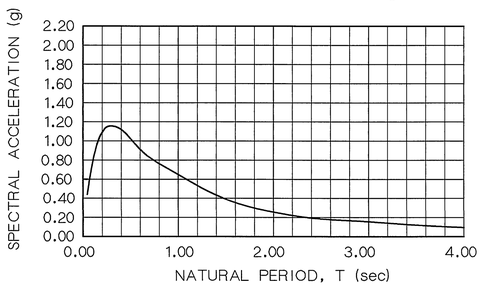

REINFORCED CONCRETE:
Exist Concrete (Assumed for retrofit evaluation)
fy = 44,000 psi
f'c = 5,000 psi
New Concrete (Bridge)
fy = 60,000 psi, ASTM A706 (Gr 60)
f'c = 4,000 psi (UNO)
f'c = 5,000 psi (At Bent 15 Footing & Arch Rib Retrofits)
TRANSVERSE DECK SLABS
(WORKING STRESS DESIGN)
fs = 20,000 psi
f'c = 1,200 psi
n = 8

PILES: See "PILE DATA TABLE"

STRUCTURAL STEEL:
HS Threaded Rod: ASTM A449
Pipe: ASTM A53, Gr B
Plates and Shapes: ASTM A709

Note:
The Contractor shall verify all controlling field dimensions before ordering or fabricating any material.

STANDARD PLANS DATED JULY, 1999

A10A	ABBREVIATIONS
A10B	SYMBOLS
B0-1	BRIDGE DETAILS
B0-5	BRIDGE DETAILS
B0-13	BRIDGE DETAILS
B6-21	JOINT SEALS
B7-5	DECK DRAINS

ABBREVIATIONS

ARS	ACCELERATION RESPONSE SPECTRUM
CIDH	CAST-IN-DRILLED-HOLE
PRA	PEAK ROCK ACCELERATION
UNO	UNLESS NOTED OTHERWISE
PIP	PROTECT IN PLACE
Ext	Exterior
Long	Longitudinal
EW	EACH WAY
Trans	Transverse
EQ	EQUAL
ED	EDGE OF DECK

LEGEND

- New 36" ∅ CIDH concrete pile
- Bottom of footing elevation
- Boring location, see "Note 2"
- Test boring location, see "Note 3"

PILE DATA TABLE

Location	Pile Type	Design Loading (Service)	Nominal Resistance		Cut-Off Elevation	Design Tip Elevation	Specified Tip Elevation
			Compression	Tension			
Pier 15	36"∅CIDH	400 kips	1200 kips	780 kips	835.85'	785.6' (1)&(2) 785.6' (3)	781.0± "Note 3"

Design tip elevation is controlled by the following demands:
(1) Compression; (2) Tension; (3) Lateral Loads

ELEVATION DATUM

Elevation Datum is National Geodetic Vertical Datum 1929 (NGVD) with 1971 adjustment.
Reference Point H7-A2 (Reference FB 717/70) Elev=909.777
(2nd Order Point, Brass Disk stamped "H7-A" in monument well at Intersection of Victoria Avenue and Bridge Street)

NOTES:

1. Match bottom of existing footing. See "Footing Retrofit Details 1" sheet for details.
2. Boring locations are approximate.
3. The Geotechnical Engineer shall establish final specified pile tip elevation based on results of Contractor's test boring.

INDEX TO PLANS

SHEET No.	TITLE
7.	GENERAL PLAN
8.	DECK CONTOURS
9.	FOUNDATION PLAN
10.	CONCRETE STRENGTH & TYPE LIMITS
11.	ABUTMENT 1 LAYOUT
12.	ABUTMENT 36 LAYOUT
13.	ABUTMENT DETAILS 1
14.	ABUTMENT DETAILS 2
15.	ABUTMENT DETAILS 3
16.	FOOTING RETROFIT DETAILS 1
17.	FOOTING RETROFIT DETAILS 2
18.	FOOTING RETROFIT DETAILS 3
19.	PILE DETAILS
20.	ARCH RIB RETROFIT LIMITS
21.	ARCH SHOE RETROFIT DETAILS 1
22.	ARCH SHOE RETROFIT DETAILS 2
23.	ARCH SHOE RETROFIT DETAILS 3
24.	ARCH SHOE RETROFIT DETAILS 4
25.	ARCH SHOE RETROFIT DETAILS 5
26.	ARCH RIB RETROFIT DETAILS 1
27.	ARCH RIB RETROFIT DETAILS 2
28.	INFILL WALL DETAILS 1
29.	INFILL WALL DETAILS 2
30.	SHEAR WALL DETAILS 1
31.	SHEAR WALL DETAILS 2
32.	SHEAR WALL DETAILS 3
33.	SHEAR WALL DETAILS 4
34.	SPANDREL COLUMN DETAILS
35.	TYPICAL SECTION
36.	CAP BEAM DETAILS
37.	GIRDER LAYOUT
38.	GIRDER REINFORCEMENT DETAILS 1
39.	GIRDER REINFORCEMENT DETAILS 2
40.	EXPANSION JOINT DETAILS 1
41.	EXPANSION JOINT DETAILS 2
42.	BARRIER RAILING DETAILS 1
43.	BARRIER RAILING DETAILS 2
44.	BARRIER RAILING DETAILS 3
45.	STRUCTURE APPROACH DETAILS
46.	JOINT SEAL ASSEMBLY (MAX MR=4")
47.	BRIDGE REPAIR DETAILS 1
48.	BRIDGE REPAIR DETAILS 2
49.	BRIDGE REPAIR DETAILS 3
50.	BRIDGE REPAIR DETAILS 4
51.	BRIDGE REPAIR DETAILS 5
52.	BRIDGE REPAIR DETAILS 6
53.	BRIDGE REPAIR DETAILS 7
54.	DEMOLITION DETAILS 1
55.	DEMOLITION DETAILS 2
56.	DEMOLITION SEQUENCE
57.	FALSEWORK DETAILS
58.	TEMPORARY PEDESTRIAN ACCESS 1
59.	TEMPORARY PEDESTRIAN ACCESS 2
60.	LOG OF TEST BORINGS 1
61.	LOG OF TEST BORINGS 2
62.	LOG OF TEST BORINGS 3

MIKE KATUSIAN
DESIGN OVERSIGHT
12/20/02
SIGN-OFF DATE

	BY	CHECKED
DESIGN	M. CHAR	T.W. DUDLEY
DETAILS	R. ANDRASEK	T.W. DUDLEY
QUANTITIES	N. MORCILLO	Y. KIM

CITY OF RIVERSIDE

G.J. NASCIMENTO
PROJECT ENGINEER

BRIDGE NO. 56C-55
POST MILE LOC

VICTORIA AVENUE BRIDGE
SEISMIC RETROFIT
FOUNDATION PLAN

ORIGINAL SCALE IN INCHES FOR REDUCED PLANS 0 1 2 3

CU
EA

DISREGARD PRINTS BEARING EARLIER REVISION DATES →

REVISION DATES (PRELIMINARY STAGE ONLY)

SHEET 9 OF 62

INDEXED 12-6-04 JH

DIST	COUNTY	ROUTE	POST MILES TOTAL PROJECT	SHEET NO.	TOTAL SHEETS
8	Riv	LOC			

REGISTERED CIVIL ENGINEER

12/20/02
PLANS APPROVAL DATE

REGISTERED PROFESSIONAL ENGINEER
T.W. DUDLEY
No. 39514
Exp. 12/31/05
CIVIL
STATE OF CALIFORNIA

CITY OF RIVERSIDE
DEPARTMENT OF PUBLIC WORKS
3900 Main Street
Riverside, California 92522

LIM & NASCIMENTO ENGINEERING
12 Mauchly, Bldg L
Irvine, California 92618

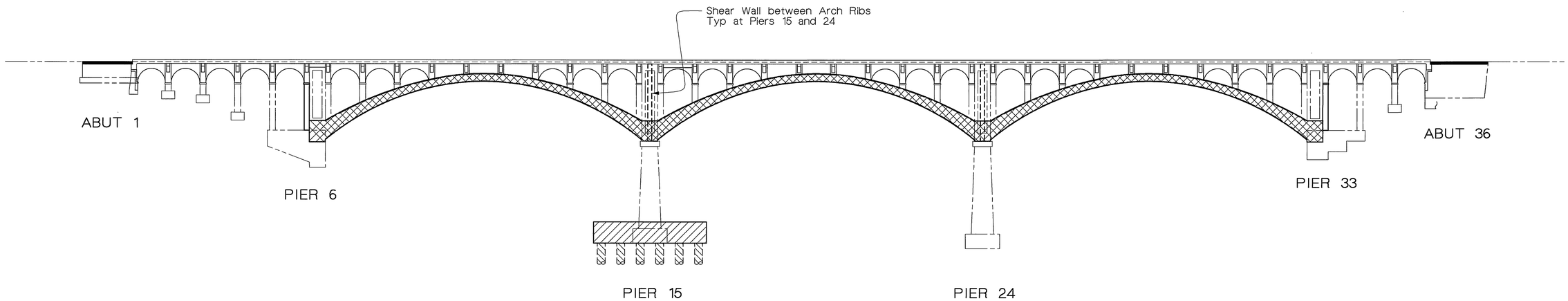

ELEVATION
No Scale

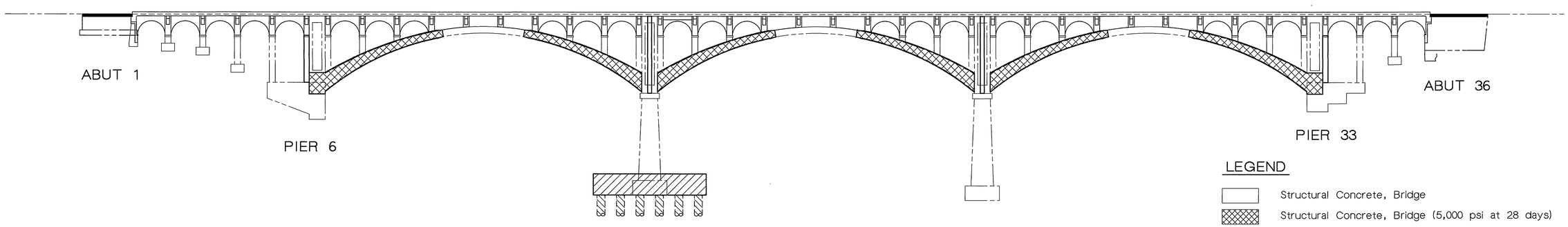

INTERIOR ARCH RIB
No Scale

LEGEND

- Structural Concrete, Bridge
- Structural Concrete, Bridge (5,000 psi at 28 days)
- Structural Concrete, Approach Slab
- Structural Concrete, Bridge Footing
- Cast-In-Drilled-Hole Concrete Pile
- Existing Structure to Remain

Note:
The Contractor shall verify all controlling field dimensions before ordering or fabricating any material.

VICTORIA AVENUE BRIDGE
SEISMIC RETROFIT
CONCRETE STRENGTH AND TYPE LIMITS

MIKE KATUSIAN, DESIGN OVERSIGHT	DESIGN	BY M. CHAR	CHECKED T.W. DUDLEY
SIGN OFF DATE	DETAILS	BY N. MORCILLO	CHECKED T.W. DUDLEY
	QUANTITIES	BY N. MORCILLO	CHECKED Y. KIM

CITY OF RIVERSIDE

G.J. NASCIMENTO, PROJECT ENGINEER

BRIDGE NO. 56C-55
POST MILE

ORIGINAL SCALE IN INCHES FOR REDUCED PLANS 0 1 2 3

CU
EA

DISREGARD PRINTS BEARING EARLIER REVISION DATES →

REVISION DATES (PRELIMINARY STAGE ONLY)

SHEET 10 OF 62

INDEXED 12-6-04 GH

DIST	COUNTY	ROUTE	POST MILES TOTAL PROJECT	SHEET NO.	TOTAL SHEETS
8	Riv	LOC			

REGISTERED CIVIL ENGINEER

12/20/02
PLANS APPROVAL DATE

REGISTERED PROFESSIONAL ENGINEER T.W. DUDLEY No. 39514 Exp. 12/31/05 CIVIL STATE OF CALIFORNIA

CITY OF RIVERSIDE
DEPARTMENT OF PUBLIC WORKS
3900 Main Street
Riverside, California 92522

LIM & NASCIMENTO ENGINEERING
12 Mauchly, Bldg L
Irvine, California 92618

REPAIR LEGEND

1. Inject epoxy in crack.
2. 3½"Ø I.D. Ducts for telephone conduit Protect in place.
3. Repair not used at Abutment 1.
4. Remove exist access door & frame, conduit & wiring. Fill solid with concrete per detail on "Abutment Details 2" sheet.
5. Repair not used at Abutment 1.
6. Existing 3"Ø Gas main to be removed at Abutment wall by others. 6"Ø Utility opening to be cored/cast through existing Abutment wall and new concrete overlay at location of existing alignment.

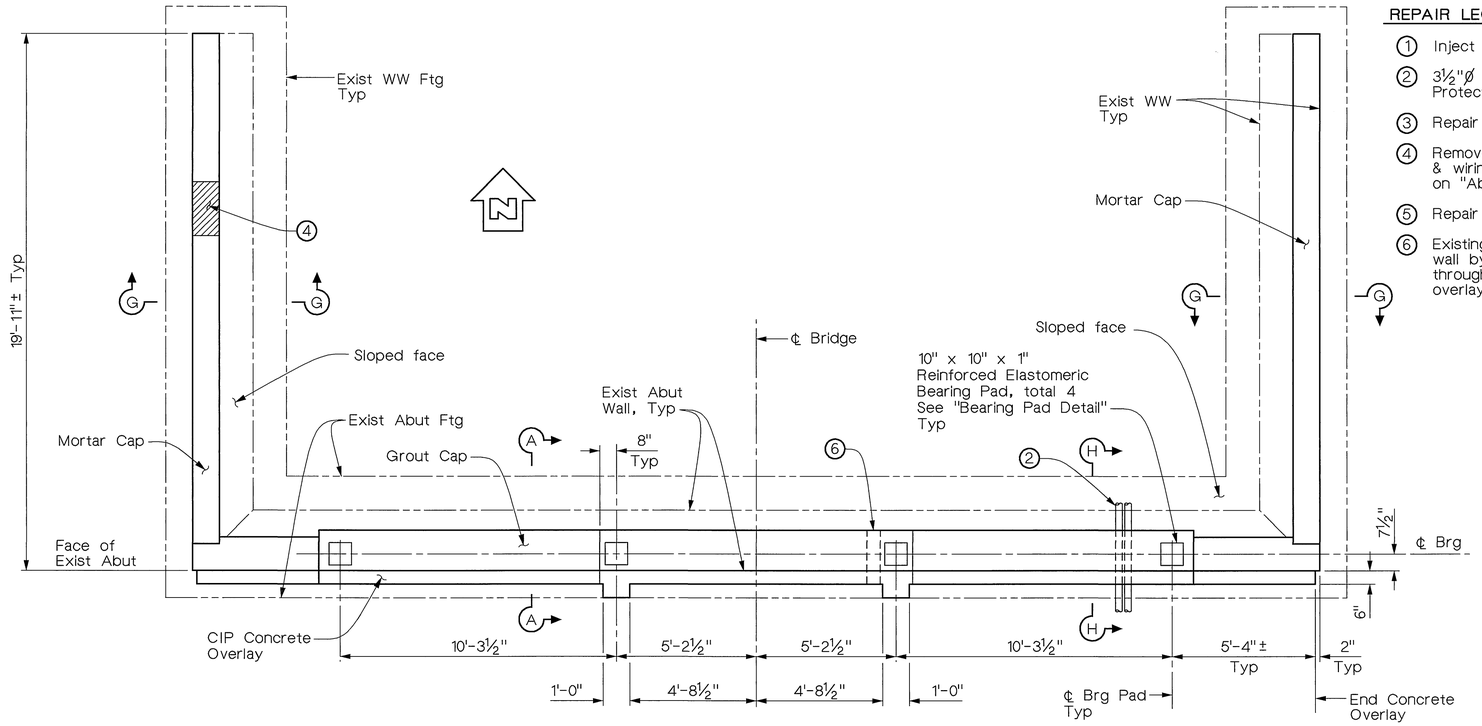

PLAN
3/8" = 1'-0"

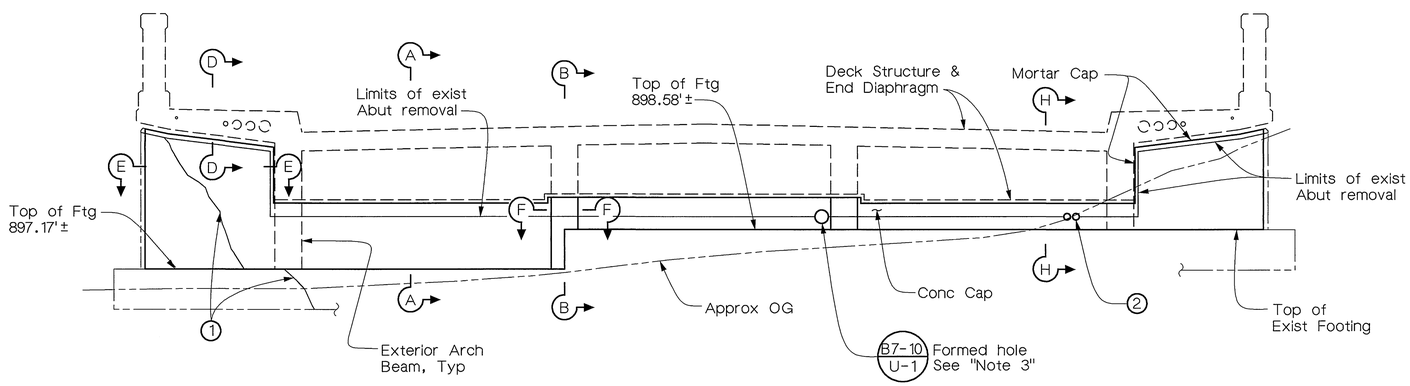

ELEVATION
3/8" = 1'-0"

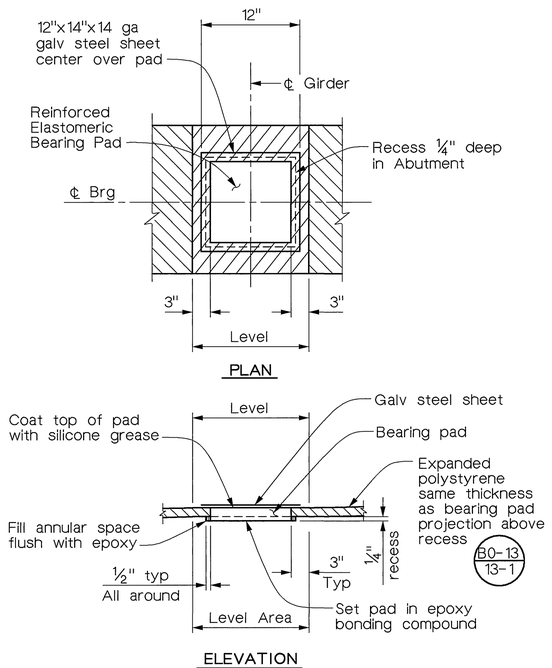

BEARING PAD DETAIL
No Scale

Notes:

1. For Sections A-A, B-B, D-D, E-E, F-F & H-H see "Abutment Details 1" sheet.
2. For "Section G-G" see "Abutment Details 3" sheet.
3. Existing reinforcing exposed in cored hole shall be removed to 1½" below finished surface and covered wit cement mortar.

Note:
The Contractor shall verify all controlling field dimensions before ordering or fabricating any material.

MIKE KATUSIAN, DESIGN OVERSIGHT	DESIGN	BY M. CHAR	CHECKED T.W. DUDLEY	CITY OF RIVERSIDE	G.J. NASCIMENTO, PROJECT ENGINEER
SIGN OFF DATE	DETAILS	BY E. GIROD	CHECKED T.W. DUDLEY		
	QUANTITIES	BY N. MORCILLO	CHECKED Y. KIM		

ORIGINAL SCALE IN INCHES FOR REDUCED PLANS 0 1 2 3

CU
EA

BRIDGE NO. 56C-55
POST MILE

DISREGARD PRINTS BEARING EARLIER REVISION DATES →

REVISION DATES (PRELIMINARY STAGE ONLY)

SHEET 11 OF 62

VICTORIA AVENUE BRIDGE
SEISMIC RETROFIT
ABUTMENT 1 LAYOUT

INDEXED 12-6-04 LH

DIST	COUNTY	ROUTE	POST MILES TOTAL PROJECT	SHEET NO.	TOTAL SHEETS
8	Riv	LOC			

REGISTERED CIVIL ENGINEER

12/20/02
PLANS APPROVAL DATE

REGISTERED PROFESSIONAL ENGINEER T.W. DUDLEY No. 39514 Exp. 12/31/05 CIVIL STATE OF CALIFORNIA

CITY OF RIVERSIDE
DEPARTMENT OF PUBLIC WORKS
3900 Main Street
Riverside, California 92522

LIM & NASCIMENTO ENGINEERING
12 Mauchly, Bldg L
Irvine, California 92618

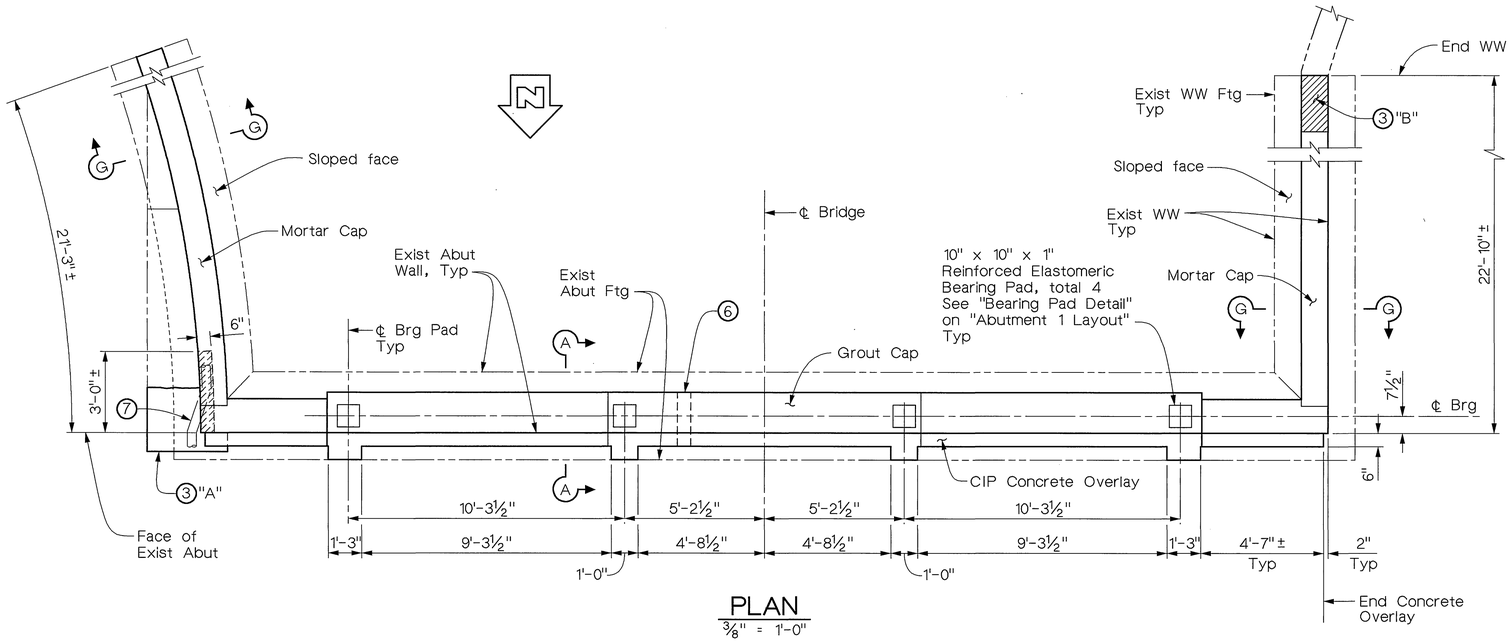

PLAN
3/8" = 1'-0"

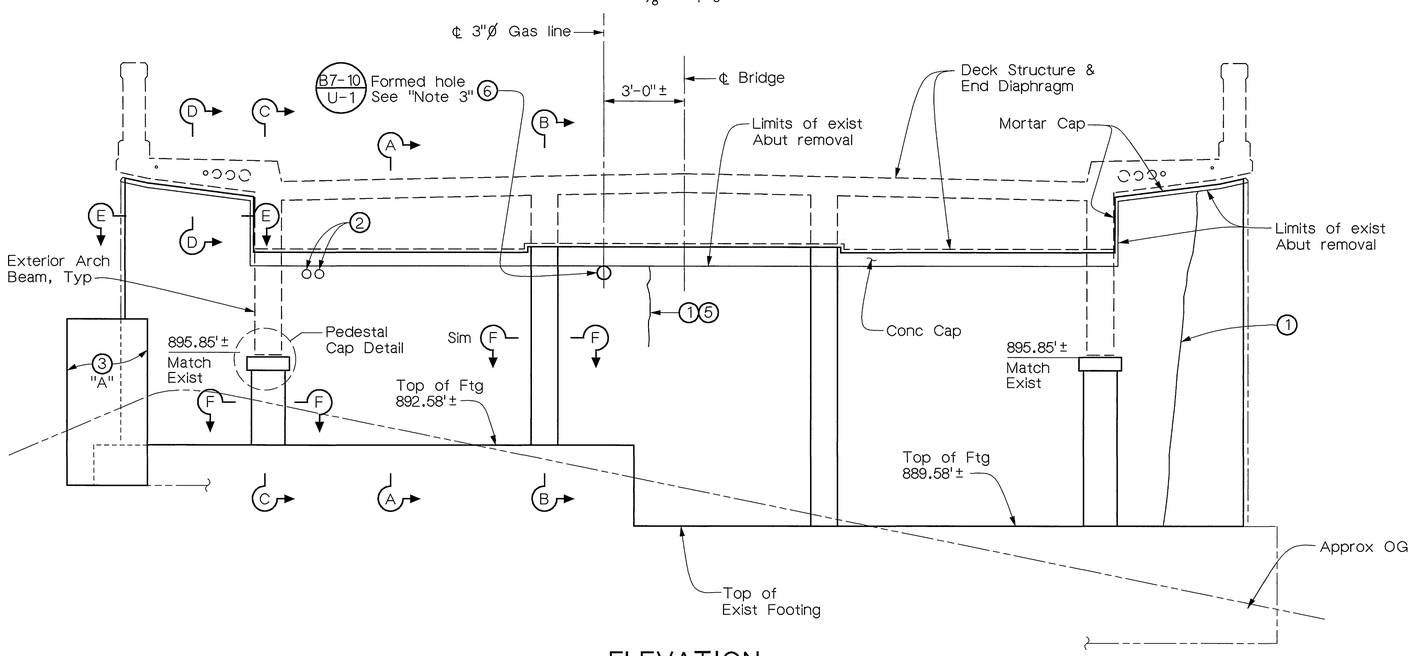

ELEVATION
3/8" = 1'-0"

Note:
The Contractor shall verify all controlling field dimensions before ordering or fabricating any material.

REPAIR LEGEND

1. Inject epoxy in crack.
2. 3½"Ø I.D. Ducts for telephone. Protect in place.
3. Remove Broken Concrete & reconstruct per repair details on "Abutment Details 3" sheet
4. Repair not used at Abutment 36.
5. Remove damaged concrete to sound surface. Remove bent reinf to 1½" clear of surface & clean exposed reinf. Patch damaged area solid with cement mortar.
6. Existing 3"Ø Gas main to be removed by The Gas Company. 6"Ø Utility opening to be cored/cast through existing Abutment wall and new concrete overlay at location of existing alignment.
7. Remove existing utility ducts & grout solid.

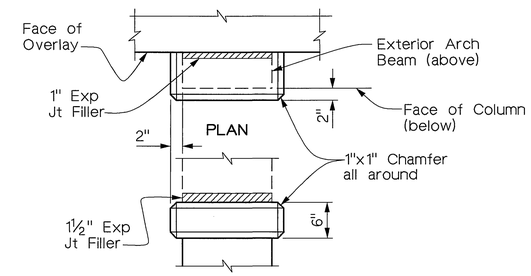

PEDESTAL CAP DETAIL
1" = 1'-0"

Notes:

1. For Sections A-A, B-B, C-C, D-D, E-E & F-F, see "Abutment Details 1" sheet.
2. For "Section G-G", see "Abutment Details 3" sheet.
3. Existing reinforcing exposed in cored hole shall be removed to 1½" below finished surface and covered with cement mortar.

MIKE KATUSIAN
DESIGN OVERSIGHT
12/20/02
SIGN/OFF DATE

	BY	CHECKED
DESIGN	M. CHAR	T.W. DUDLEY
DETAILS	E. GIROD	T.W. DUDLEY
QUANTITIES	N. MORCILLO	Y. KIM

CITY OF RIVERSIDE

G.J. NASCIMENTO
PROJECT ENGINEER

BRIDGE NO. 56C-55
POST MILE

VICTORIA AVENUE BRIDGE
SEISMIC RETROFIT
ABUTMENT 36 LAYOUT

ORIGINAL SCALE IN INCHES FOR REDUCED PLANS 0 1 2 3

CU
EA

DISREGARD PRINTS BEARING EARLIER REVISION DATES →

REVISION DATES (PRELIMINARY STAGE ONLY)

SHEET 12 OF 62

INDEXED 12-6-04 KH

DIST	COUNTY	ROUTE	POST MILES TOTAL PROJECT	SHEET NO.	TOTAL SHEETS
8	Riv	LOC			

REGISTERED CIVIL ENGINEER

12/20/02
PLANS APPROVAL DATE

REGISTERED PROFESSIONAL ENGINEER T.W. DUDLEY No. 39514 Exp. 12/31/05 CIVIL STATE OF CALIFORNIA

CITY OF RIVERSIDE
DEPARTMENT OF PUBLIC WORKS
3900 Main Street
Riverside, California 92522

LIM & NASCIMENTO ENGINEERING
12 Mauchly, Bldg L
Irvine, California 92618

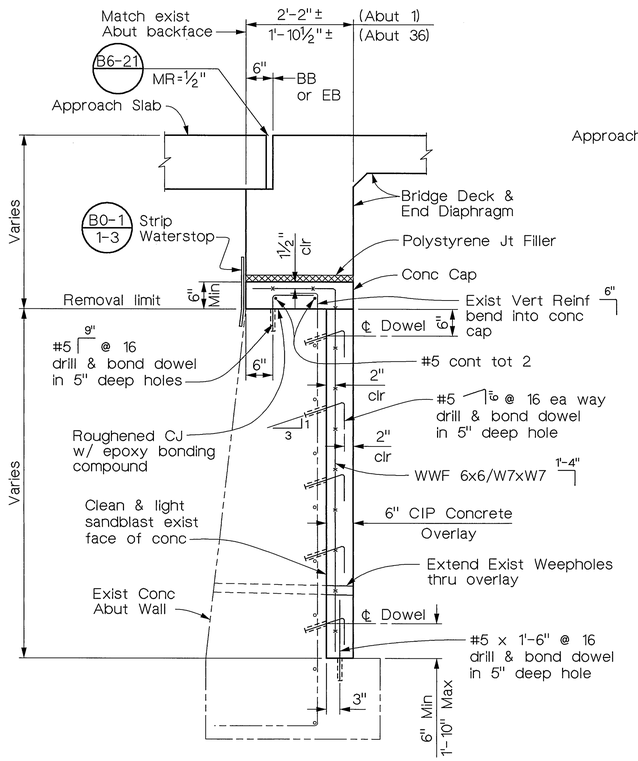

SECTION A-A
¾" = 1'-0"

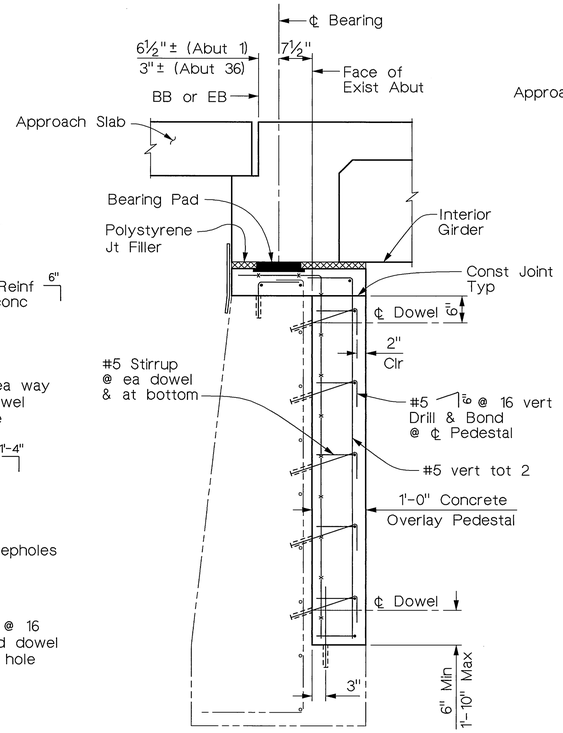

SECTION B-B
¾" = 1'-0"

Note:
For information not shown see "Section A-A"

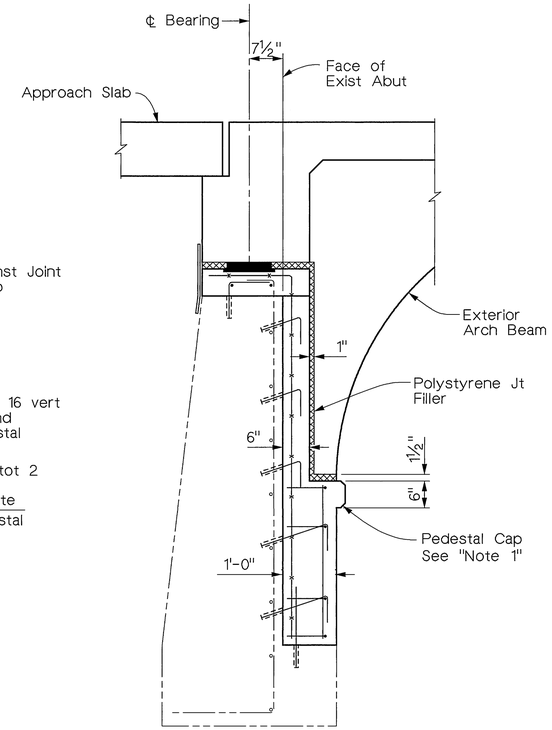

SECTION C-C
¾" = 1'-0"

Note:
For information not shown see "Sections A-A & B-B"

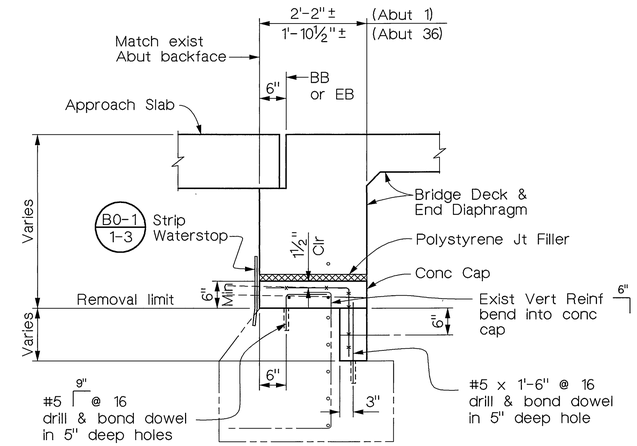

SECTION H-H
¾" = 1'-0"

Note:
For information not shown see "Section A-A"

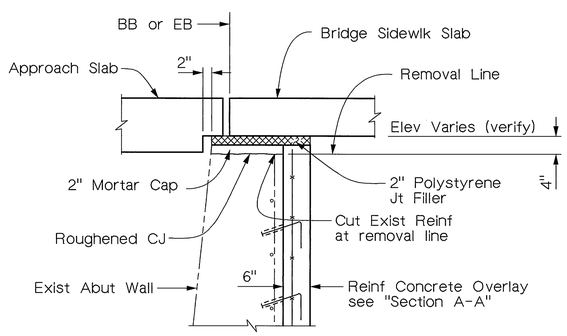

SECTION D-D
¾" = 1'-0"

Note:
For information not shown see "Section A-A"

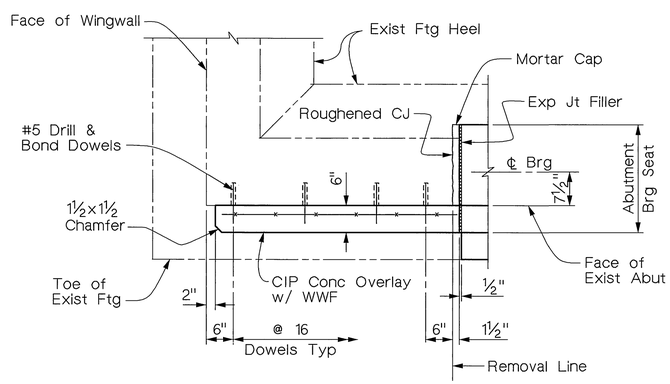

SECTION E-E
¾" = 1'-0"

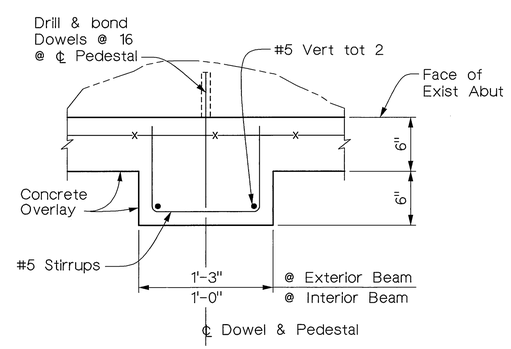

SECTION F-F
1½" = 1'-0"

Notes:

1. For Pedestal Cap, see "Abutment 36 Layout" sheet.

Note:
The Contractor shall verify all controlling field dimensions before ordering or fabricating any material.

MIKE KATUSIAN, DESIGN OVERSIGHT	DESIGN	BY M. CHAR	CHECKED T.W. DUDLEY
12/20/02, SIGN OFF DATE	DETAILS	BY E. GIROD	CHECKED T.W. DUDLEY
	QUANTITIES	BY N. MORCILLO	CHECKED Y. KIM

CITY OF RIVERSIDE

G.J. NASCIMENTO, PROJECT ENGINEER

BRIDGE NO. 56C-55
POST MILE

VICTORIA AVENUE BRIDGE
SEISMIC RETROFIT
ABUTMENT DETAILS 1

ORIGINAL SCALE IN INCHES FOR REDUCED PLANS 0 1 2 3

CU
EA

DISREGARD PRINTS BEARING EARLIER REVISION DATES →

REVISION DATES (PRELIMINARY STAGE ONLY)

SHEET 13 OF 62

INDEXED 12-6-04 LFH

DIST	COUNTY	ROUTE	POST MILES TOTAL PROJECT	SHEET NO.	TOTAL SHEETS
8	Riv	LOC			

REGISTERED CIVIL ENGINEER

12/20/02
PLANS APPROVAL DATE

REGISTERED PROFESSIONAL ENGINEER T.W. DUDLEY No. 39514 Exp. 12/31/05 CIVIL STATE OF CALIFORNIA

CITY OF RIVERSIDE
DEPARTMENT OF PUBLIC WORKS
3900 Main Street
Riverside, California 92522

LIM & NASCIMENTO ENGINEERING
12 Mauchly, Bldg L
Irvine, California 92618

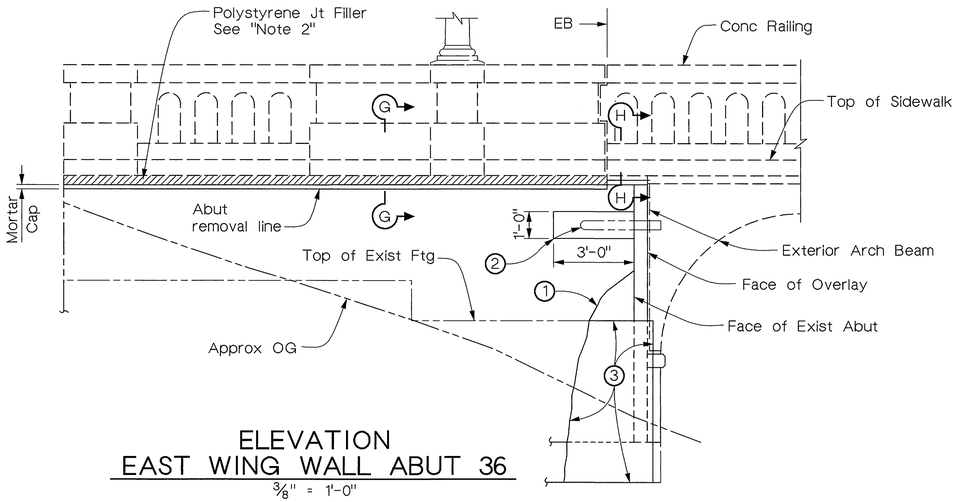

ELEVATION
EAST WING WALL ABUT 36
3/8" = 1'-0"

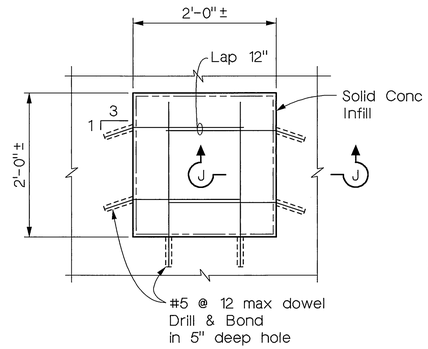

ACCESS DOOR DETAIL
1" = 1'-0"

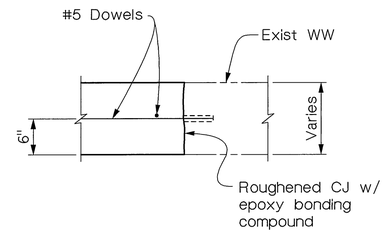

SECTION J-J
1" = 1'-0"

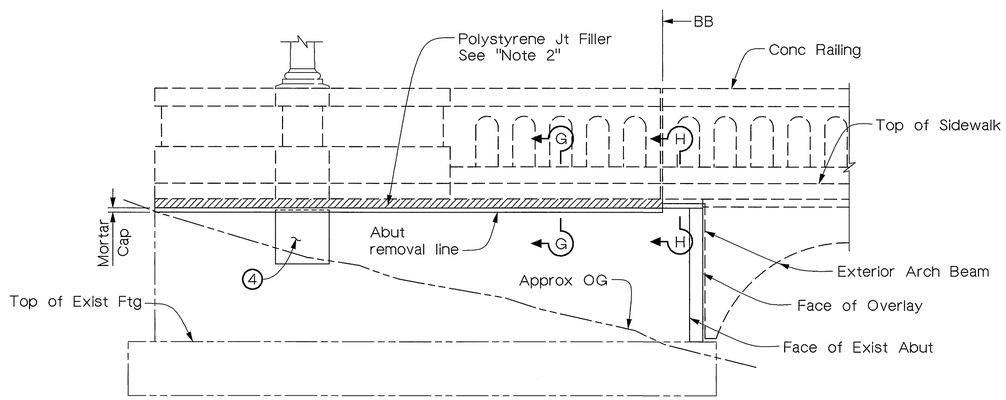

(EAST WING WALL SIMILAR)
ELEVATION
WEST WING WALL ABUT 1
3/8" = 1'-0"

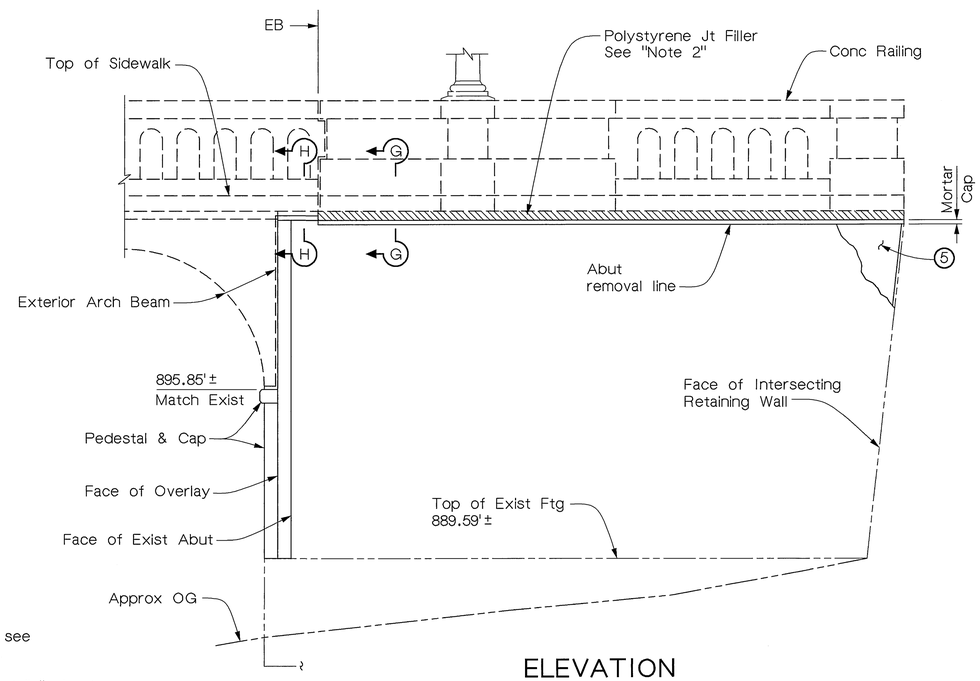

ELEVATION
WEST WING WALL ABUT 36
3/8" = 1'-0"

REPAIR LEGEND

1. Epoxy inject crack
2. Remove Utility Ducts & grout solid
3. Remove Broken Concrete & reconstruct per "Repair Detail A" on "Abutment Details 3" sheet
4. Remove exist access door & frame, conduit & wiring. Fill solid w/ conc per detail.
5. Remove broken concrete and reconstruct per "Repair Detail B" on "Abutment Details 3" sheet.

Notes:

1. For Sections G-G & H-H, see "Abutment Details 3" sheet.
2. See "Structure Approach Details" sheet.

Note:
The Contractor shall verify all controlling field dimensions before ordering or fabricating any material.

MIKE KATUSIAN
DESIGN OVERSIGHT
12/20/02
SIGN OFF DATE

	BY	CHECKED
DESIGN	M. CHAR	T.W. DUDLEY
DETAILS	E. GIROD	T.W. DUDLEY
QUANTITIES	N. MORCILLO	Y. KIM

ORIGINAL SCALE IN INCHES FOR REDUCED PLANS 0 1 2 3

CITY OF RIVERSIDE

G.J. NASCIMENTO
PROJECT ENGINEER

CU
EA

BRIDGE NO. 56C-55
POST MILE

DISREGARD PRINTS BEARING EARLIER REVISION DATES →

REVISION DATES (PRELIMINARY STAGE ONLY)

SHEET 14 OF 62

VICTORIA AVENUE BRIDGE
SEISMIC RETROFIT
ABUTMENT DETAILS 2

INDEXED 12-6-04 4H

DIST	COUNTY	ROUTE	POST MILES TOTAL PROJECT	SHEET NO.	TOTAL SHEETS
8	Riv	LOC			

REGISTERED CIVIL ENGINEER

12/20/02
PLANS APPROVAL DATE

REGISTERED PROFESSIONAL ENGINEER T.W. DUDLEY No. 39514 Exp. 12/31/05 CIVIL STATE OF CALIFORNIA

CITY OF RIVERSIDE
DEPARTMENT OF PUBLIC WORKS
3900 Main Street
Riverside, California 92522

LIM & NASCIMENTO ENGINEERING
12 Mauchly, Bldg L
Irvine, California 92618

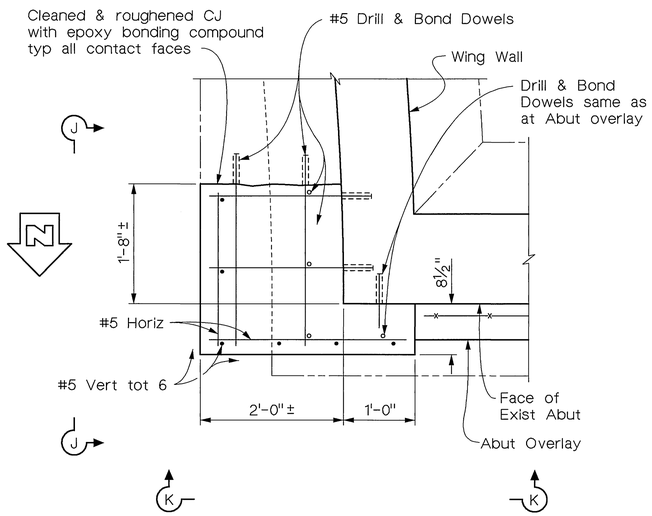

PLAN

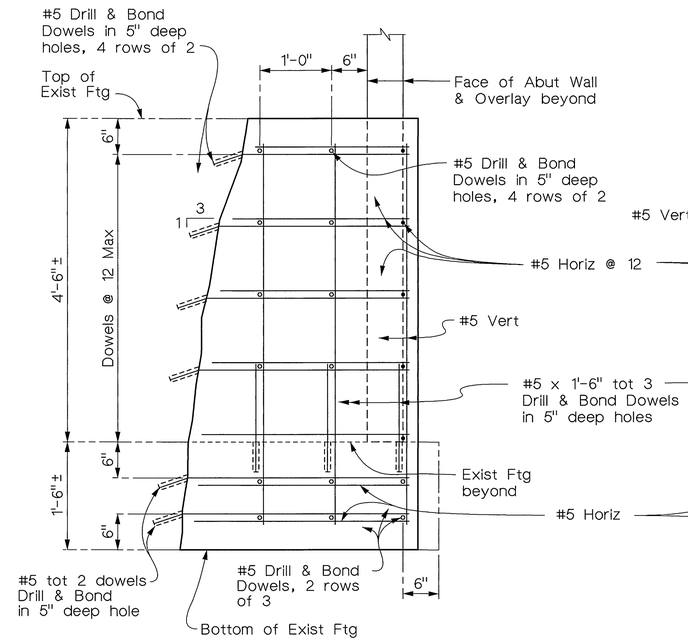

VIEW J-J

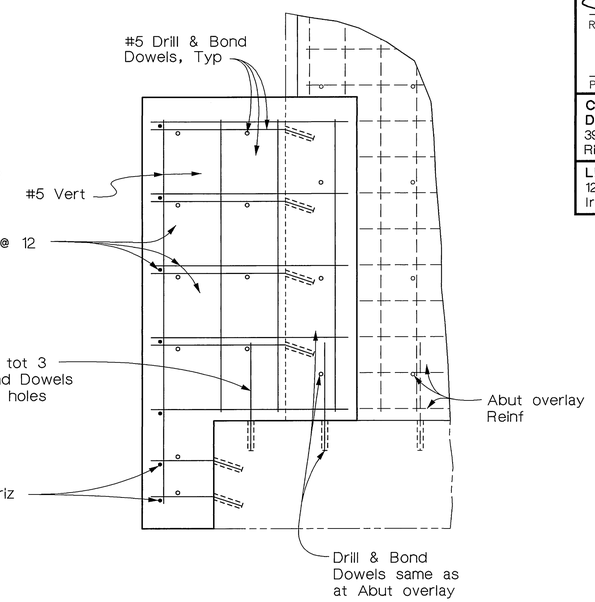

VIEW K-K

REPAIR DETAIL "A"
(East Wingwall, Abutment 36)
1" = 1'-0"

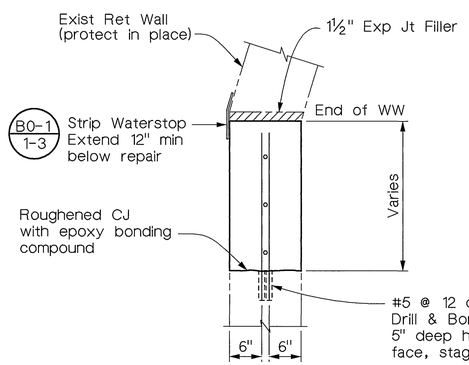

PLAN

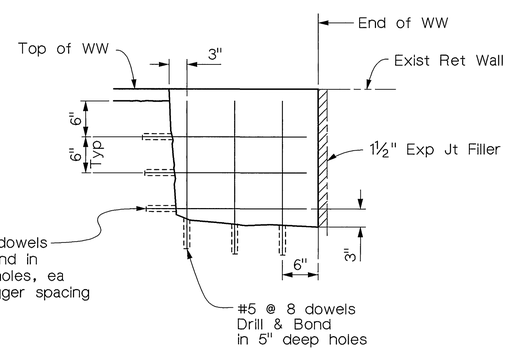

ELEVATION

REPAIR DETAIL "B"
(West Wingwall, Abutment 36)
1" = 1'-0"

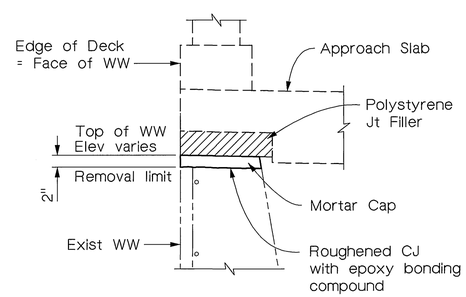

SECTION G-G
1" = 1'-0"

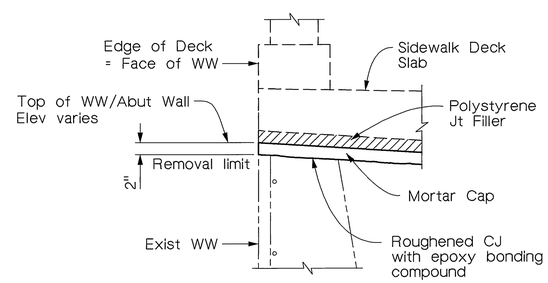

SECTION H-H
1" = 1'-0"

Note:
The Contractor shall verify all controlling field dimensions before ordering or fabricating any material.

MIKE KATUSIAN
DESIGN OVERSIGHT
12/20/02
SIGN OFF DATE

	BY	CHECKED
DESIGN	M. CHAR	T.W. DUDLEY
DETAILS	E. GIROD	T.W. DUDLEY
QUANTITIES	N. MORCILLO	Y. KIM

CITY OF RIVERSIDE

ORIGINAL SCALE IN INCHES FOR REDUCED PLANS 0 1 2 3

G.J. NASCIMENTO
PROJECT ENGINEER

CU
EA

BRIDGE NO. 56C-55
POST MILE

VICTORIA AVENUE BRIDGE
SEISMIC RETROFIT
ABUTMENT DETAILS 3

DISREGARD PRINTS BEARING EARLIER REVISION DATES →
REVISION DATES (PRELIMINARY STAGE ONLY)

SHEET 15 OF 62

INDEXED 12-6-04 LFH

DIST	COUNTY	ROUTE	POST MILES TOTAL PROJECT	SHEET NO.	TOTAL SHEETS
8	Riv	LOC			

REGISTERED CIVIL ENGINEER

12/20/02
PLANS APPROVAL DATE

REGISTERED PROFESSIONAL ENGINEER T.W. DUDLEY No. 39514 Exp. 12/31/05 CIVIL STATE OF CALIFORNIA

CITY OF RIVERSIDE
DEPARTMENT OF PUBLIC WORKS
3900 Main Street
Riverside, California 92522

LIM & NASCIMENTO ENGINEERING
12 Mauchly, Bldg L
Irvine, California 92618

Notes:

1. Drill & Bond Dowel in 12" deep hole. For "Dowel Placement Schedule", see "Footing Retrofit Details 3" sheet.
2. For "Bottom Mat Reinforcement Layout", see "Footing Retrofit Details 2" sheet.
3. For "Top Mat Reinforcement Layout", see "Footing Retrofit Details 3" sheet.
4. The Contractor shall locate existing pier wall reinforcing and core between them.
5. For "Pile Data Table", see "Foundation Plan" sheet.
6. Longitudinal reinforcing steel for CIDH piles may need to be spliced in order to avoid conflicts with existing structural elements overhead. Refer to "Pile Details" and "General Plan" Sheets, and As-Built Bridge Plans for further information.

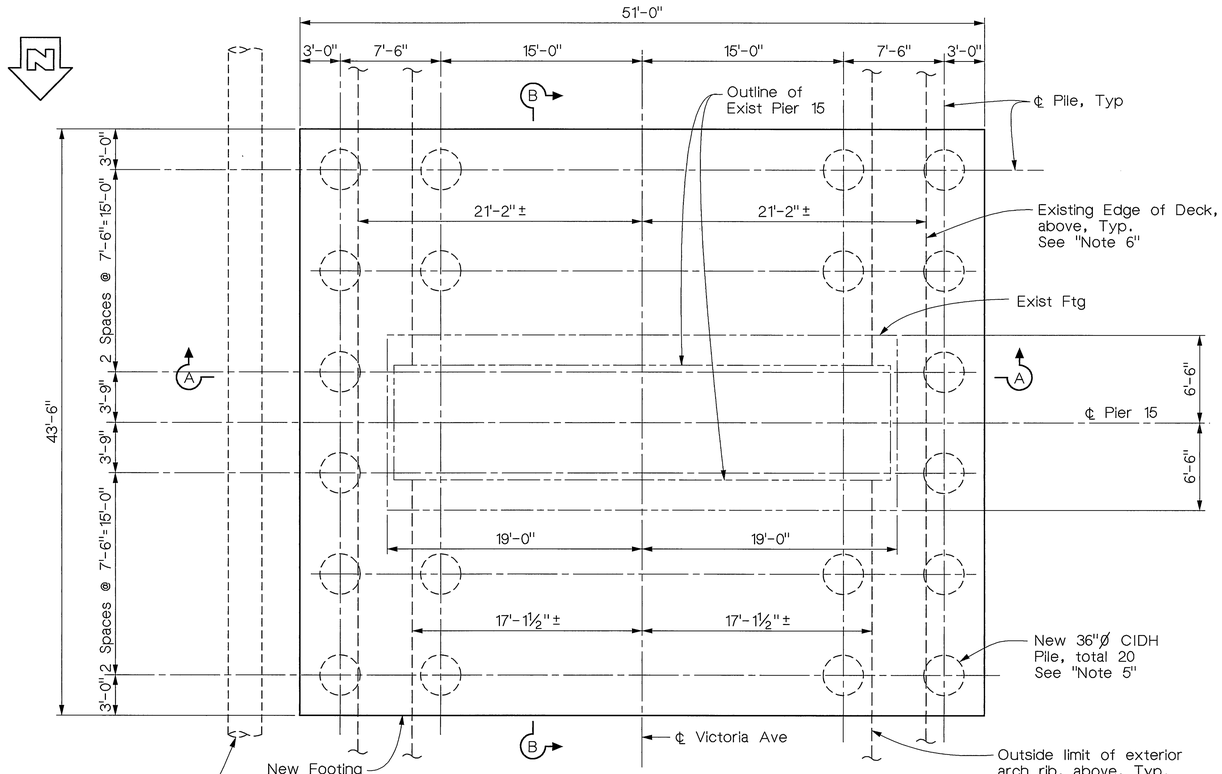

PIER FOOTING PILE LAYOUT

3/16" = 1'-0"

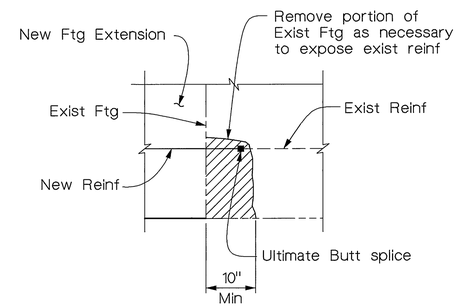

DETAIL 1

½" = 1'-0"

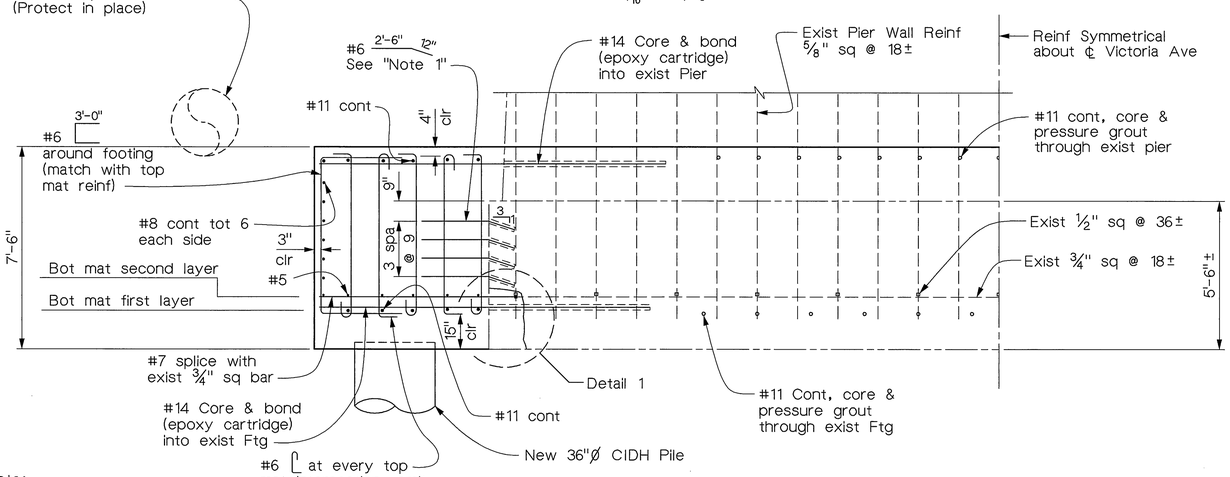

SECTION A-A

3/8" = 1'-0"

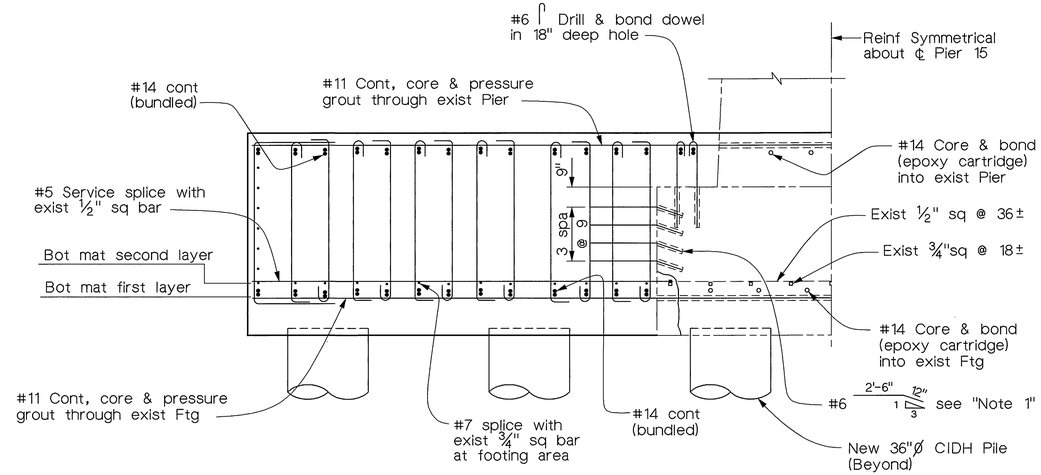

Note: For Reinf information not shown, see "Section A-A"

SECTION B-B

3/8" = 1'-0"

Note:
The Contractor shall verify all controlling field dimensions before ordering or fabricating any material.

MIKE KATUSIAN DESIGN OVERSIGHT 12/20/02 SIGN OFF DATE	DESIGN	BY M. CHAR	CHECKED T.W. DUDLEY	CITY OF RIVERSIDE	G.J. NASCIMENTO PROJECT ENGINEER
	DETAILS	BY E. GIROD	CHECKED T.W. DUDLEY		
	QUANTITIES	BY N. MORCILLO	CHECKED Y. KIM		

ORIGINAL SCALE IN INCHES FOR REDUCED PLANS 0 1 2 3

CU
EA

BRIDGE NO. 56C-55
POST MILE

VICTORIA AVENUE BRIDGE
SEISMIC RETROFIT
FOOTING RETROFIT DETAILS 1

DISREGARD PRINTS BEARING EARLIER REVISION DATES →

REVISION DATES (PRELIMINARY STAGE ONLY)

SHEET 16 OF 62

INDEXED 12-6-04 LH

DIST	COUNTY	ROUTE	POST MILES TOTAL PROJECT	SHEET NO.	TOTAL SHEETS
8	Riv	LOC			

REGISTERED CIVIL ENGINEER

12/20/02
PLANS APPROVAL DATE

REGISTERED PROFESSIONAL ENGINEER
T.W. DUDLEY
No. 39514
Exp. 12/31/05
CIVIL
STATE OF CALIFORNIA

CITY OF RIVERSIDE
DEPARTMENT OF PUBLIC WORKS
3900 Main Street
Riverside, California 92522

LIM & NASCIMENTO ENGINEERING
12 Mauchly, Bldg L
Irvine, California 92618

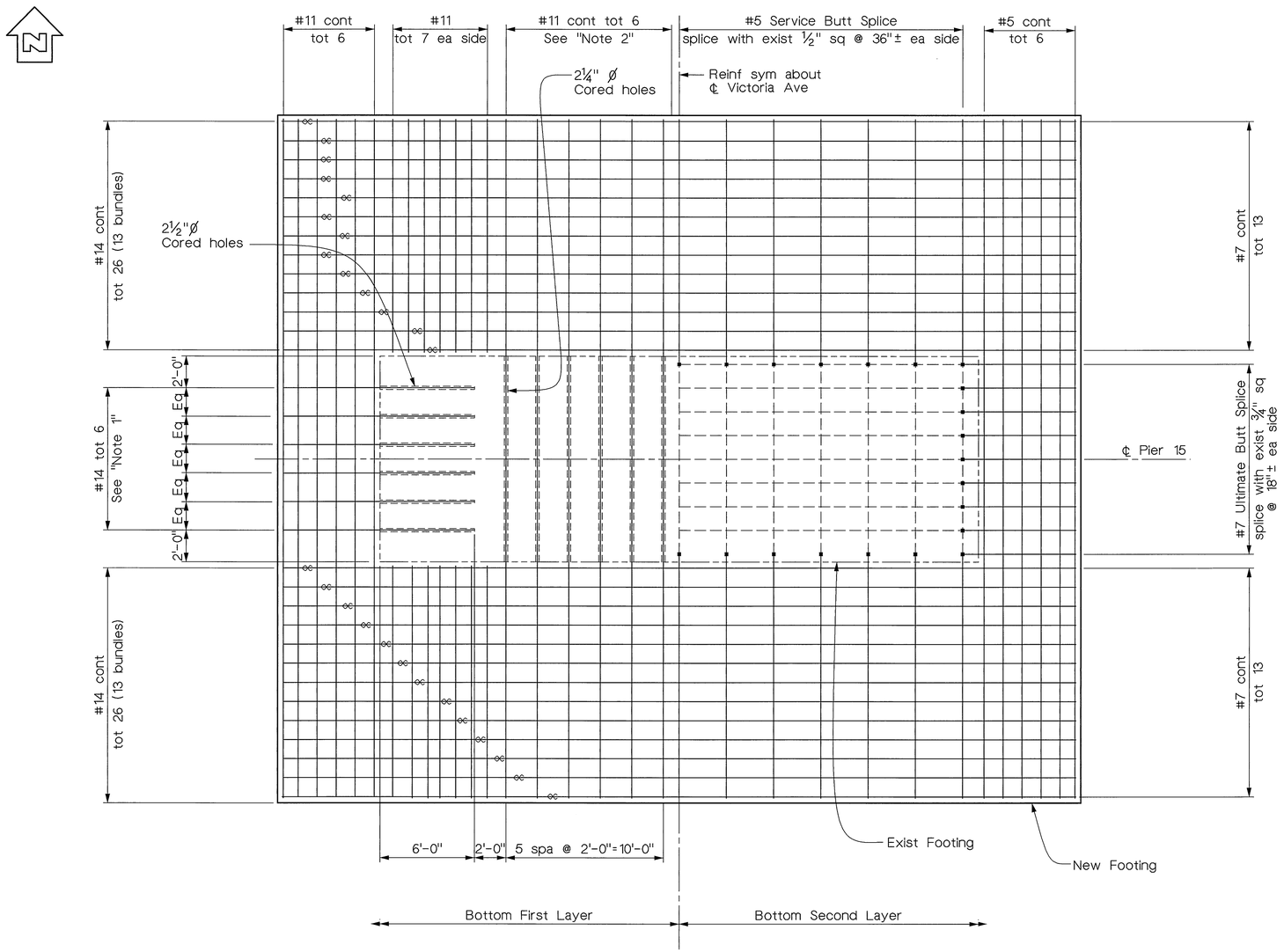

BOTTOM MAT REINFORCEMENT LAYOUT

¼" = 1'-0"

Notes:

1. Epoxy Cartridge into existing footing.
2. Core and Pressure Grout through existing footing.
3. For "Top Reinforcement Layout" & "Dowel Placement Schedule", see "Footing Retrofit Details 3" sheet.
4. Adjust location of cored holes to clear exist reinforcement.

Note:
The Contractor shall verify all controlling field dimensions before ordering or fabricating any material.

MIKE KATUSIAN DESIGN OVERSIGHT 12/20/02 SIGN OFF DATE	DESIGN	BY M. CHAR	CHECKED T.W. DUDLEY	CITY OF RIVERSIDE
	DETAILS	BY E. GIROD	CHECKED T.W. DUDLEY	
	QUANTITIES	BY N. MORCILLO	CHECKED Y. KIM	

G.J. NASCIMENTO
PROJECT ENGINEER

BRIDGE NO. 56C-55
POST MILE

VICTORIA AVENUE BRIDGE
SEISMIC RETROFIT
FOOTING RETROFIT DETAILS 2

ORIGINAL SCALE IN INCHES FOR REDUCED PLANS 0 1 2 3

CU
EA

DISREGARD PRINTS BEARING EARLIER REVISION DATES →

REVISION DATES (PRELIMINARY STAGE ONLY)

SHEET 17 OF 62

INDEXED 12-6-04 LH

DIST	COUNTY	ROUTE	POST MILES TOTAL PROJECT	SHEET NO.	TOTAL SHEETS
8	Riv	LOC			

REGISTERED CIVIL ENGINEER

12/20/02
PLANS APPROVAL DATE

REGISTERED PROFESSIONAL ENGINEER T.W. DUDLEY No. 39514 Exp. 12/31/05 CIVIL STATE OF CALIFORNIA

CITY OF RIVERSIDE
DEPARTMENT OF PUBLIC WORKS
3900 Main Street
Riverside, California 92522

LIM & NASCIMENTO ENGINEERING
12 Mauchly, Bldg L
Irvine, California 92618

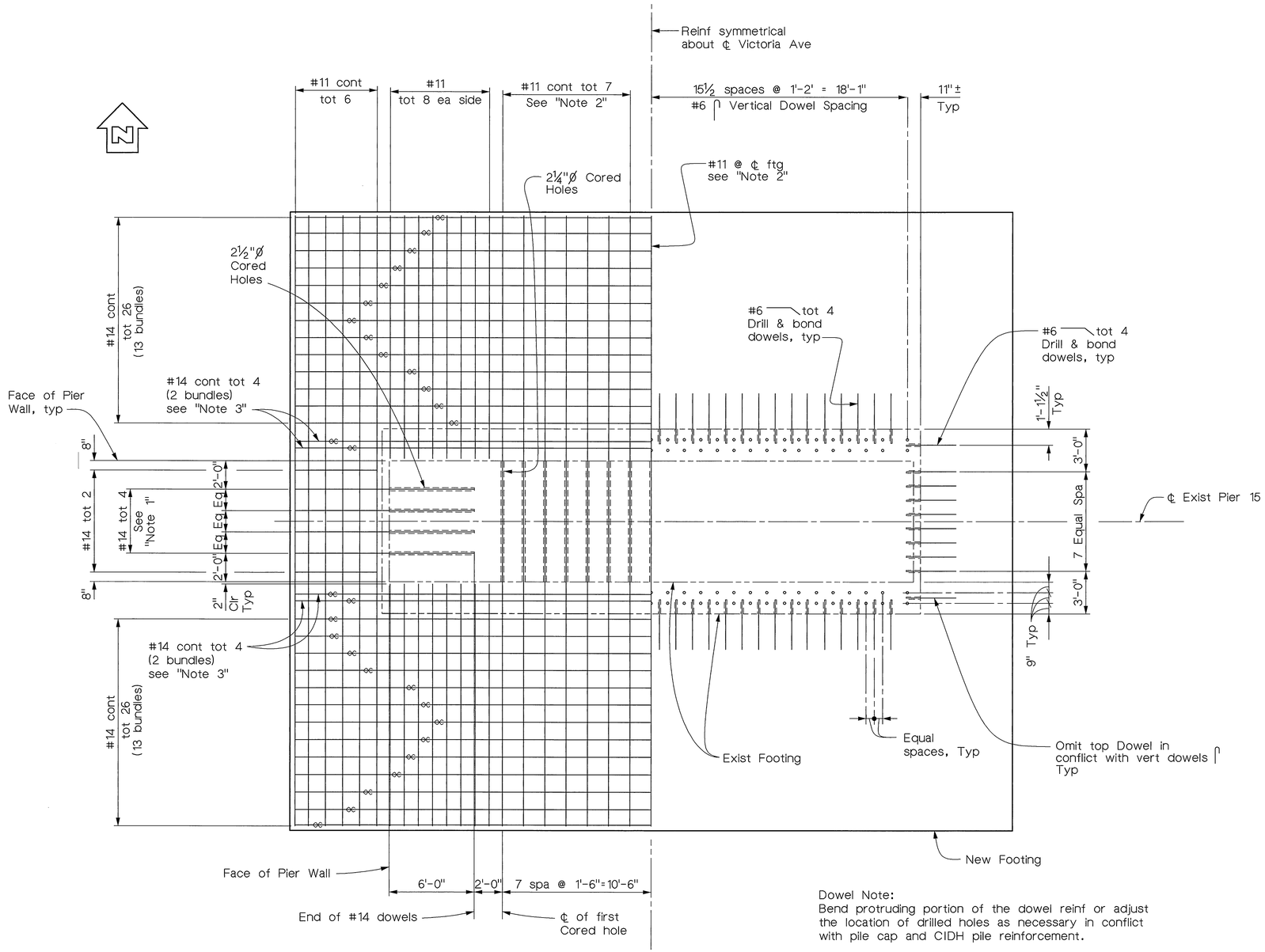

TOP MAT REINFORCEMENT LAYOUT
¼" = 1'-0"

Dowel Note:
Bend protruding portion of the dowel reinf or adjust the location of drilled holes as necessary in conflict with pile cap and CIDH pile reinforcement.

DOWEL PLACEMENT SCHEDULE
¼" = 1'-0"

Notes:

1. Epoxy Cartridge into existing pier.
2. Core and Pressure Grout through existing pier.
3. Place bars as shown per "Section B-B" on "Footing Retrofit Details 1" sheet and "Dowel Placement Schedule" this sheet.
4. For "Bottom Mat Reinforcement Layout", see "Footing Retrofit Details 2" sheet.

Note:
The Contractor shall verify all controlling field dimensions before ordering or fabricating any material.

MIKE KATUSIAN
DESIGN OVERSIGHT
12/20/02
SIGN OFF DATE

	BY	CHECKED
DESIGN	M. CHAR	T.W. DUDLEY
DETAILS	E. GIROD	T.W. DUDLEY
QUANTITIES	N. MORCILLO	Y. KIM

CITY OF RIVERSIDE

G.J. NASCIMENTO
PROJECT ENGINEER

BRIDGE NO. 56C-55
POST MILE

VICTORIA AVENUE BRIDGE
SEISMIC RETROFIT
FOOTING RETROFIT DETAILS 3

ORIGINAL SCALE IN INCHES FOR REDUCED PLANS 0 1 2 3

CU
EA

DISREGARD PRINTS BEARING EARLIER REVISION DATES →
REVISION DATES (PRELIMINARY STAGE ONLY)

SHEET 18 OF 62

INDEXED 12-6-04 LH

DIST	COUNTY	ROUTE	POST MILES TOTAL PROJECT	SHEET NO.	TOTAL SHEETS
8	Riv	LOC			

REGISTERED CIVIL ENGINEER

12/20/02
PLANS APPROVAL DATE

REGISTERED PROFESSIONAL ENGINEER T.W. DUDLEY No. 39514 Exp. 12/31/05 CIVIL STATE OF CALIFORNIA

CITY OF RIVERSIDE
DEPARTMENT OF PUBLIC WORKS
3900 Main Street
Riverside, California 92522

LIM & NASCIMENTO ENGINEERING
12 Mauchly, Bldg L
Irvine, California 92618

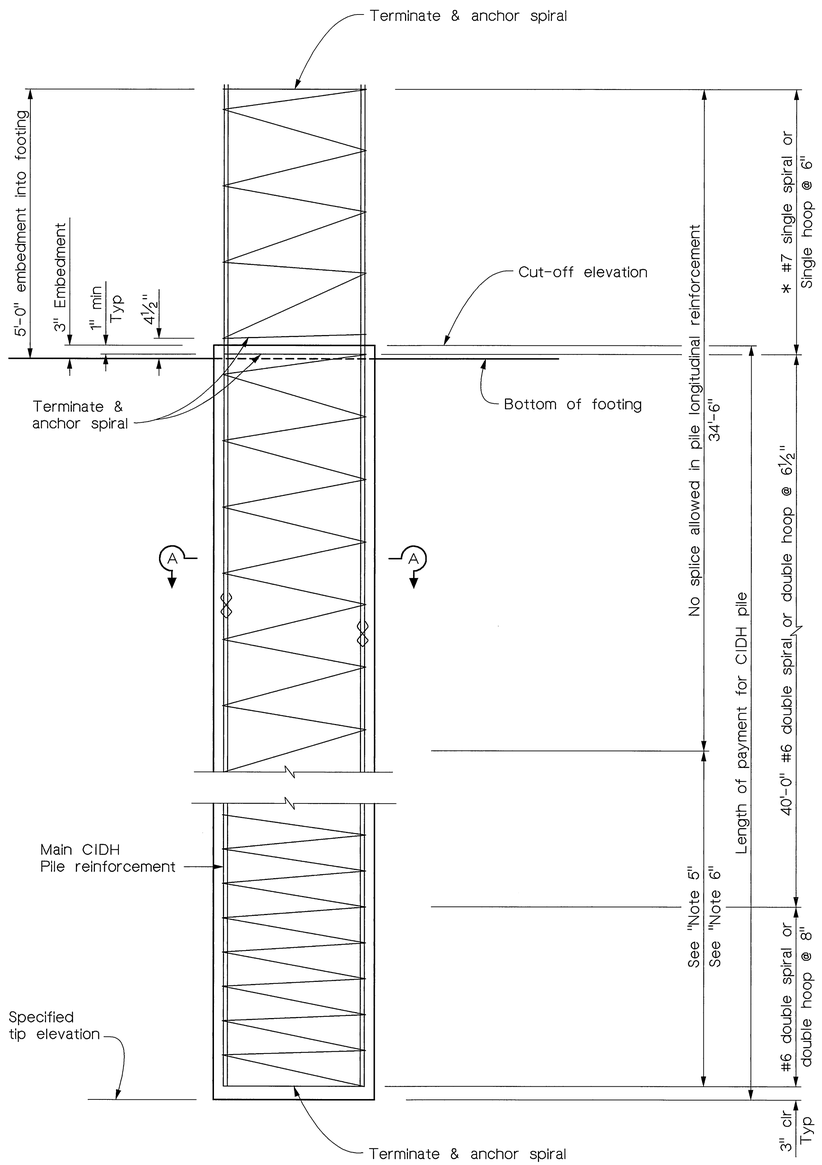

* Adjust spacing as necessary to clear Footing bottom mat reinforcement.

36"Ø CIDH PILE AT PIER 15

No Scale

Notes:

1. Anchorage and splices in spiral reinforcement shall be made by weld or sleeve mechanical coupler. See "Bar Spiral Splice and Spiral Anchor and Hoop Detail", this sheet.
2. Splice in pile longitudinal reinforcement shall be made by butt weld or sleeve mechanical coupler. Stagger adjacent splice locations at least 2'-0".
3. For "Pile Data Table", see "Foundation Plan" sheet.
4. All hoops are "Ultimate Butt" splice continuous.
5. Only staggered "Ultimate Butt" splices are allowed in pile longitudinal reinforcement in this zone.
6. Pile longitudinal reinforcement may be required to be spliced in order to facilitate installation below existing bridge elements overhead. See "Footing Retrofit Details 1" sheet for additional information.

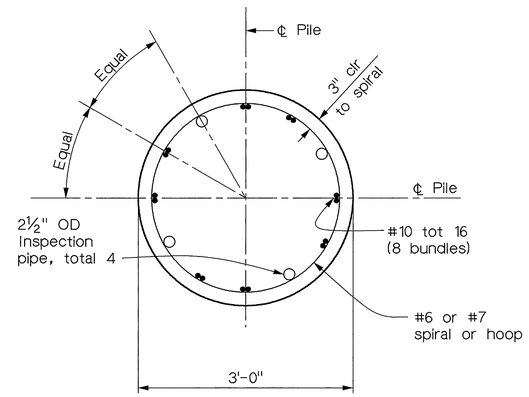

SECTION A-A

1" = 1'-0"

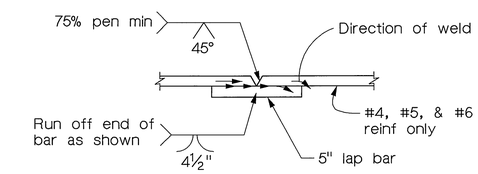

1. Butt weld to be made first
2. Butt weld to be made in flat or horizontal postition
3. Lap bar to be centered on splice
4. Flare weld to be made in direction shown
5. Lap bar equal size to spiral bar

Vee Groove Welded Splice

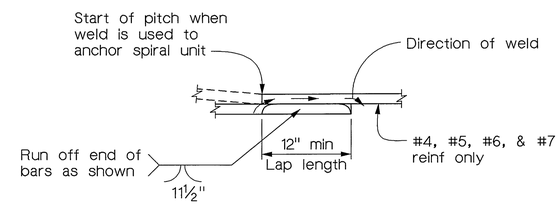

Note: Flare weld to be made in direction shown

Welded Lap Splice and Anchor

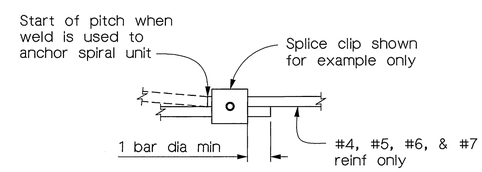

Note: The spiral anchor detail is only permitted at the ends of spiral cages that are well anchored into the footing or bent cap

Mechanical Lap Anchor

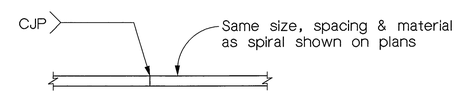

Individual hoops, made continuous with 100% penetration welds, may be substituted for spirals.

Butt Welded Continuous Hoop

BAR SPIRAL SPLICE AND SPIRAL ANCHOR AND HOOP DETAIL

No Scale

Note:
The Contractor shall verify all controlling field dimensions before ordering or fabricating any material.

MIKE KATUSIAN DESIGN OVERSIGHT 11/20/02 SIGN OFF DATE	DESIGN	BY M. CHAR	CHECKED	CITY OF RIVERSIDE	G.J. NASCIMENTO PROJECT ENGINEER
	DETAILS	BY T. DAVID	CHECKED M. CHAR		
	QUANTITIES	BY N. MORCILLO	CHECKED Y. KIM		

ORIGINAL SCALE IN INCHES FOR REDUCED PLANS 0 1 2 3

CU
EA

BRIDGE NO. 56C-55
POST MILE

VICTORIA AVENUE BRIDGE
SEISMIC RETROFIT
PILE DETAILS

DISREGARD PRINTS BEARING EARLIER REVISION DATES →
REVISION DATES (PRELIMINARY STAGE ONLY)
SHEET 19 OF 62

INDEXED 12-6-04 LFH

DIST	COUNTY	ROUTE	POST MILES TOTAL PROJECT	SHEET NO.	TOTAL SHEETS
8	Riv	LOC			

REGISTERED CIVIL ENGINEER

12/20/02
PLANS APPROVAL DATE

REGISTERED PROFESSIONAL ENGINEER T.W. DUDLEY No. 39514 Exp. 12/31/05 CIVIL STATE OF CALIFORNIA

CITY OF RIVERSIDE
DEPARTMENT OF PUBLIC WORKS
3900 Main Street
Riverside, California 92522

LIM & NASCIMENTO ENGINEERING
12 Mauchly, Bldg L
Irvine, California 92618

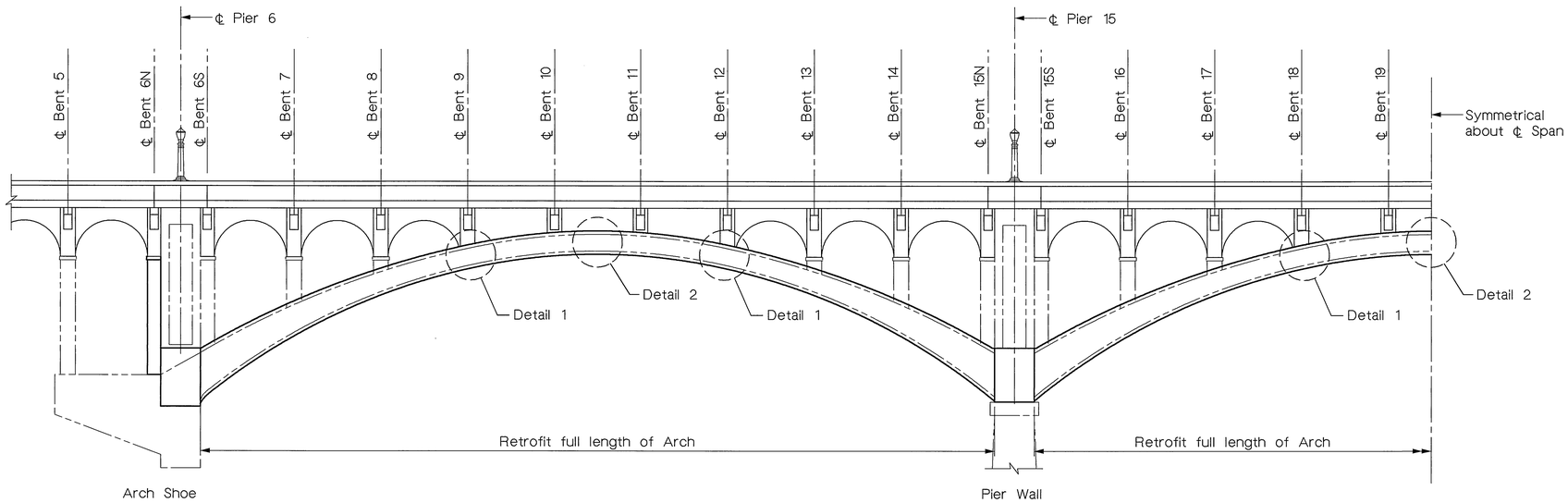

PART ELEVATION - EXTERIOR ARCH RIB

1" = 10'

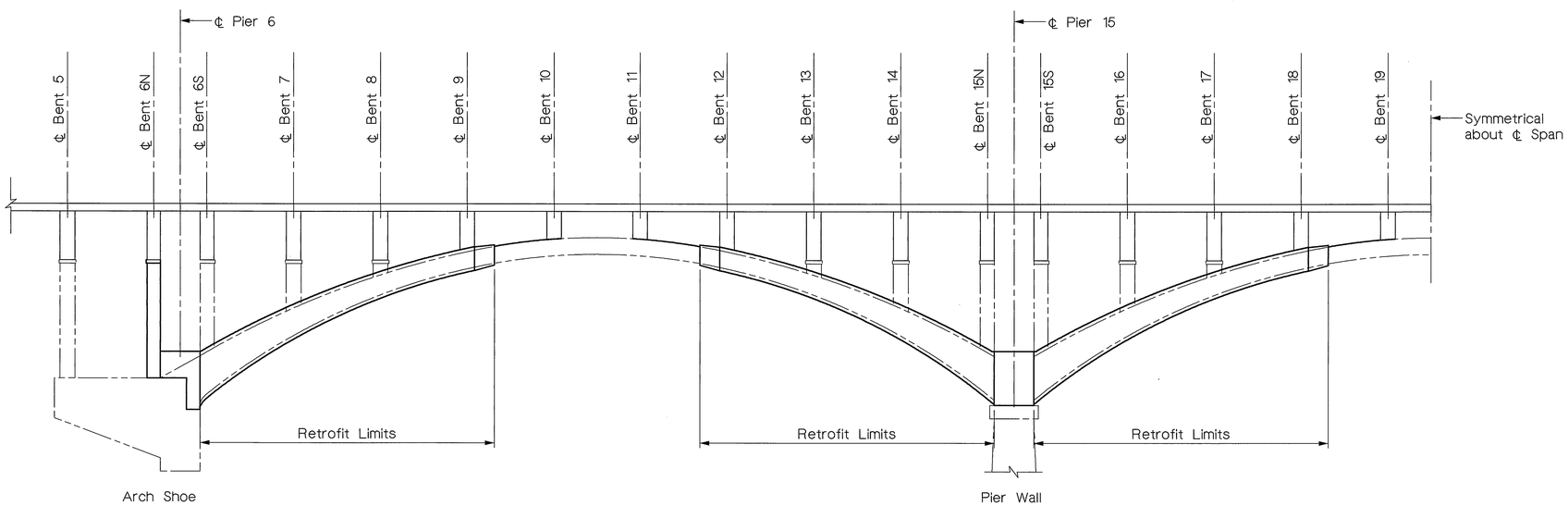

PART ELEVATION - INTERIOR ARCH RIB

1" = 10'

Note:
The Contractor shall verify all controlling field dimensions before ordering or fabricating any material.

MIKE KATUSIAN
DESIGN OVERSIGHT
12/20/02
SIGN OFF/DATE

	BY	CHECKED
DESIGN	M. CHAR	T.W. DUDLEY
DETAILS	R. ANDRASEK	T.W. DUDLEY
QUANTITIES	N. MORCILLO	Y. KIM

CITY OF RIVERSIDE

G.J. NASCIMENTO
PROJECT ENGINEER

BRIDGE NO. 56C-55
POST MILE

VICTORIA AVENUE BRIDGE
SEISMIC RETROFIT
ARCH RIB RETROFIT LIMITS

ORIGINAL SCALE IN INCHES FOR REDUCED PLANS 0 1 2 3

CU
EA

DISREGARD PRINTS BEARING EARLIER REVISION DATES →

REVISION DATES (PRELIMINARY STAGE ONLY)

SHEET 20 OF 62

INDEXED 12-6-04 GH

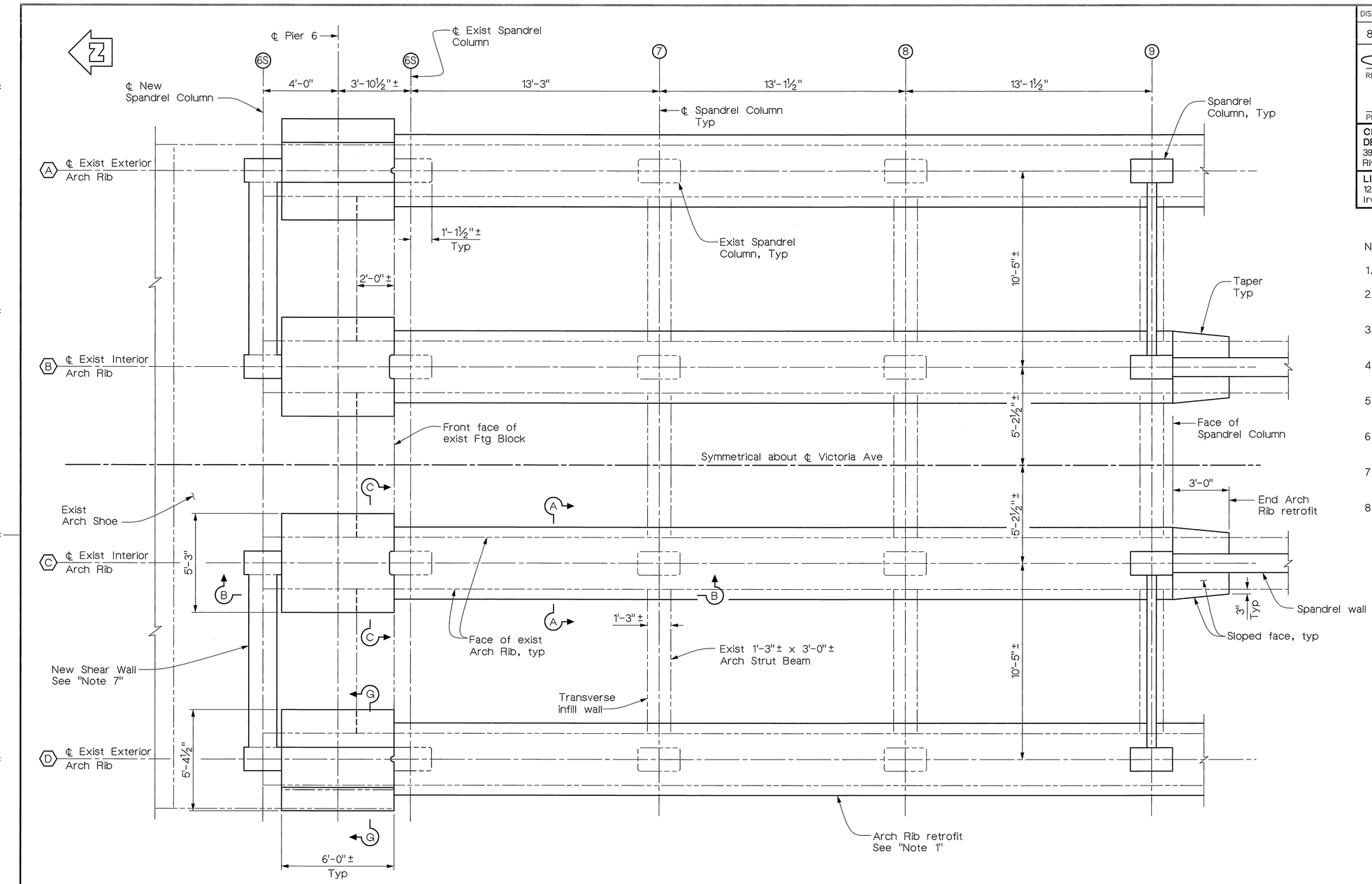

DIST	COUNTY	ROUTE	POST MILES TOTAL PROJECT	SHEET NO.	TOTAL SHEETS
8	Riv	LOC			

REGISTERED CIVIL ENGINEER

12/20/02
PLANS APPROVAL DATE

REGISTERED PROFESSIONAL ENGINEER T.W. DUDLEY No. 39514 Exp. 12/31/05 CIVIL STATE OF CALIFORNIA

CITY OF RIVERSIDE
DEPARTMENT OF PUBLIC WORKS
3900 Main Street
Riverside, California 92522

LIM & NASCIMENTO ENGINEERING
12 Mauchly, Bldg L
Irvine, California 92618

Notes:

1. Retrofit exterior Arch Ribs full length of Rib.
2. Hook stirrups on top or bottom of Arch Rib reinforcing within Spandrel Column region.
3. For "Section B-B" & "Section C-C", see "Arch Shoe Retrofit Details 2" sheet.
4. For "Sections D-D & E-E", see "Arch Shoe Retrofit Details 3" sheet.
5. For "Sections A-A & F-F", see "Arch Shoe Retrofit Details 4" sheet
6. Adjust drilled hole locations as necessasry to avoid existing reinforcement.
7. For details of shear wall construction, see "Shear Wall Details 1" sheet.
8. Dimension to Arch Shoe "step", Pier 33, only.

Note:
The Contractor shall verify all controlling field dimensions before ordering or fabricating any material.

PART PLAN
3/8" = 1'-0"

Pier 6 shown, Pier 33 similar

* Measured parallel to ℄ of Victoria Ave

MIKE KATUSIAN
DESIGN OVERSIGHT
12/20/02
SIGN OFF DATE

	BY	CHECKED
DESIGN	M. CHAR	T.W. DUDLEY
DETAILS	N. MORCILLO	T.W. DUDLEY
QUANTITIES	N. MORCILLO	Y. KIM

CITY OF RIVERSIDE

G.J. NASCIMENTO
PROJECT ENGINEER

BRIDGE NO. 56C-55
POST MILE

VICTORIA AVENUE BRIDGE
SEISMIC RETROFIT
ARCH SHOE RETROFIT DETAILS 1

ORIGINAL SCALE IN INCHES FOR REDUCED PLANS 0 1 2 3

CU
EA

DISREGARD PRINTS BEARING EARLIER REVISION DATES →

REVISION DATES (PRELIMINARY STAGE ONLY)

SHEET 21 OF 62

INDEXED 12-6-04 4H

DIST	COUNTY	ROUTE	POST MILES TOTAL PROJECT	SHEET NO.	TOTAL SHEETS
8	Riv	LOC			

REGISTERED CIVIL ENGINEER

12/20/02
PLANS APPROVAL DATE

REGISTERED PROFESSIONAL ENGINEER T.W. DUDLEY No. 39514 Exp. 12/31/05 CIVIL STATE OF CALIFORNIA

CITY OF RIVERSIDE
DEPARTMENT OF PUBLIC WORKS
3900 Main Street
Riverside, California 92522

LIM & NASCIMENTO ENGINEERING
12 Mauchly, Bldg L
Irvine, California 92618

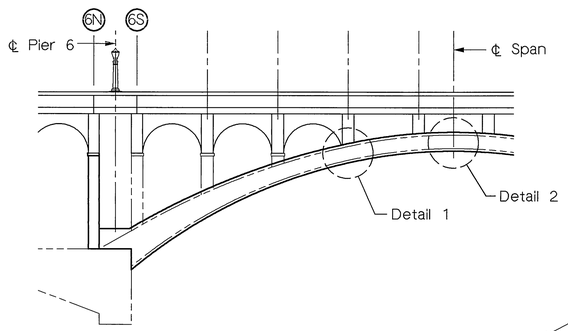

PART ELEVATION
No Scale

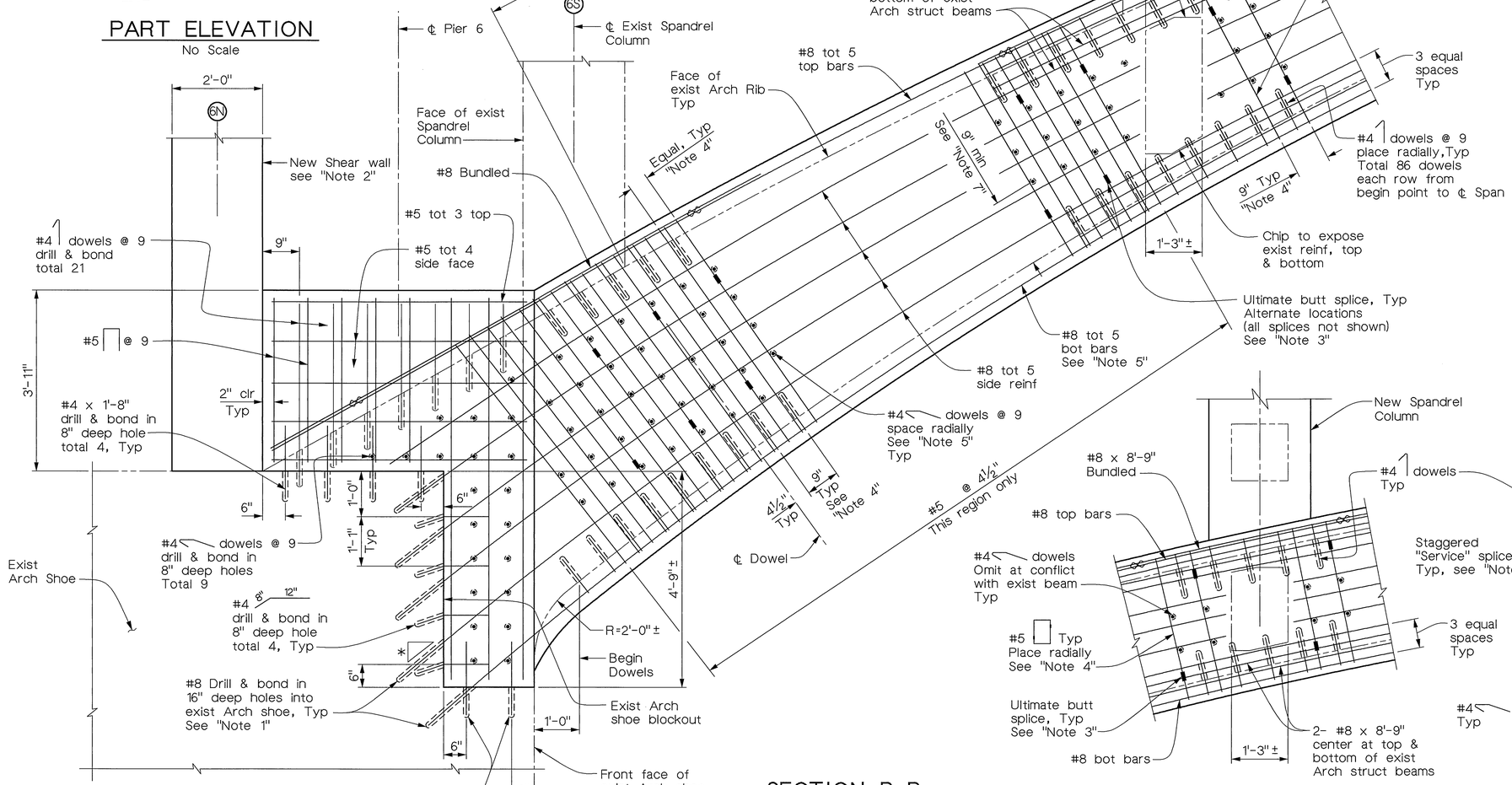

SECTION B-B
¾" = 1'-0"

Outside face of Interior Arch Rib shown
Exterior Arch Rib similar except as noted.

DETAIL 1
¾" = 1'-0"

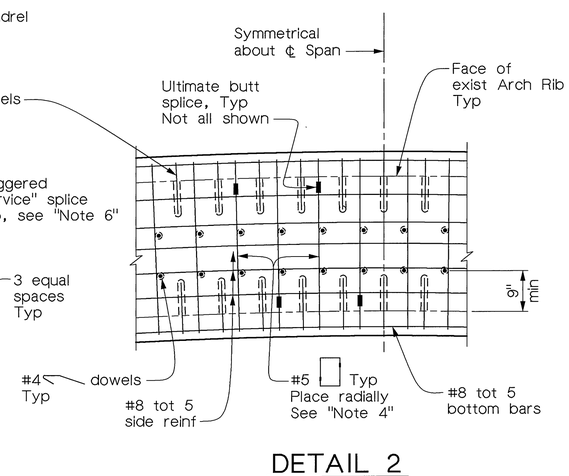

DETAIL 2
¾" = 1'-0"

Note:
For information not shown see "Section B-B".

Note:
The Contractor shall verify all controlling field dimensions before ordering or fabricating any material.

Note:
* slope normal to Arch Rib

MIKE KATUSIAN
DESIGN OVERSIGHT
12/20/02
SIGN/OFF DATE

	BY	CHECKED
DESIGN	M. CHAR	T.W. DUDLEY
DETAILS	R. ANDRASEK	T.W. DUDLEY
QUANTITIES	N. MORCILLO	Y. KIM

CITY OF RIVERSIDE

G.J. NASCIMENTO
PROJECT ENGINEER

BRIDGE NO. 56C-55
POST MILE

VICTORIA AVENUE BRIDGE
SEISMIC RETROFIT
ARCH SHOE RETROFIT DETAILS 2

ORIGINAL SCALE IN INCHES FOR REDUCED PLANS 0 1 2 3

CU
EA

DISREGARD PRINTS BEARING EARLIER REVISION DATES →

REVISION DATES (PRELIMINARY STAGE ONLY)

SHEET 22 OF 62

INDEXED 12-6-04 LFH

DIST	COUNTY	ROUTE	POST MILES TOTAL PROJECT	SHEET NO.	TOTAL SHEETS
8	Riv	LOC			

REGISTERED CIVIL ENGINEER

12/20/02
PLANS APPROVAL DATE

REGISTERED PROFESSIONAL ENGINEER T.W. DUDLEY No. 39514 Exp. 12/31/05 CIVIL STATE OF CALIFORNIA

CITY OF RIVERSIDE
DEPARTMENT OF PUBLIC WORKS
3900 Main Street
Riverside, California 92522

LIM & NASCIMENTO ENGINEERING
12 Mauchly, Bldg L
Irvine, California 92618

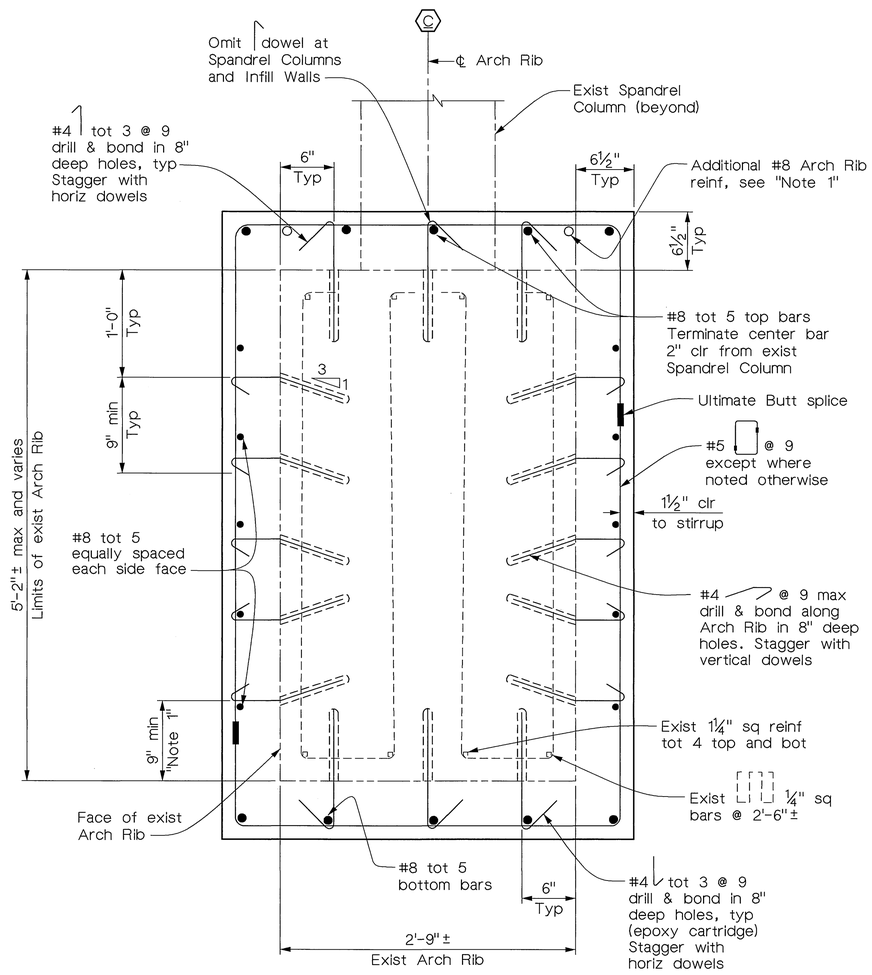

SECTION A-A

1½" = 1'-0"

(Section taken normal to Arch Rib)

Interior Arch Rib shown
Exterior Arch Rib similar

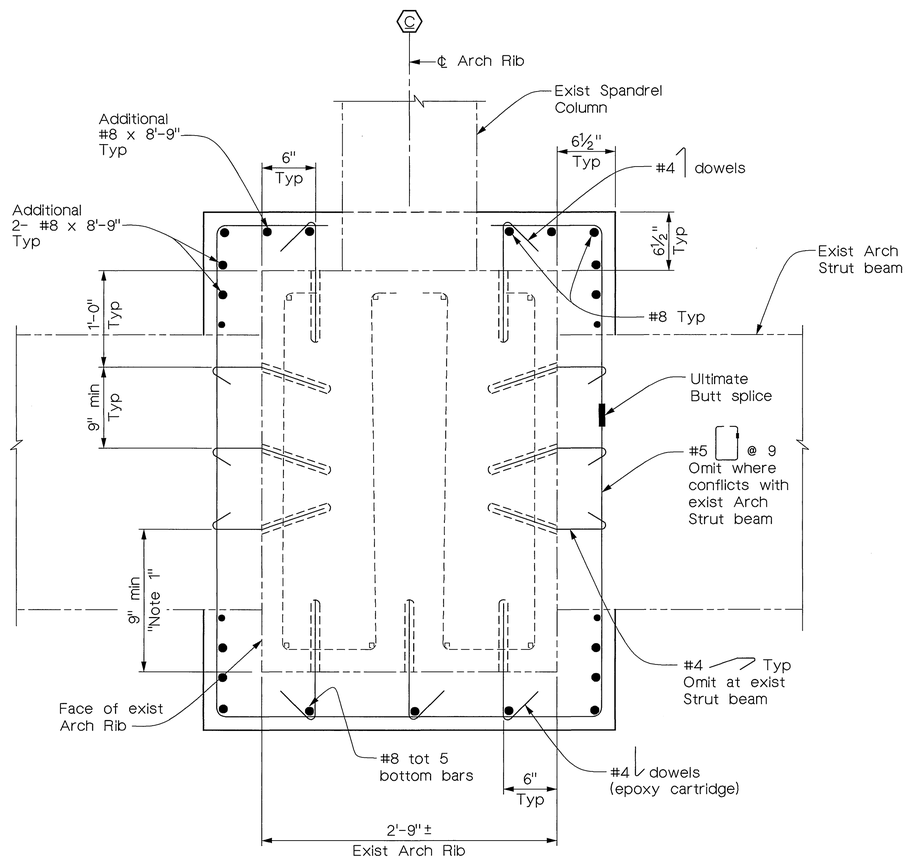

SECTION AT FACE OF EXIST STRUT BEAM

1½" = 1'-0"

(Section taken normal to Arch Rib)

Interior Arch Rib shown
Exterior Arch Rib similar

Notes:

1. For locations & placement of additional #8 Arch rib reinforcement, see "Part Plan" views on "Arch Shoe Retrofit Details 4" & "Arch Rib Retrofit Details 1" sheets.

Note:
The Contractor shall verify all controlling field dimensions before ordering or fabricating any material.

MIKE KATUSIAN
DESIGN OVERSIGHT
12/20/02
SIGN OFF DATE

DESIGN	BY M. CHAR	CHECKED T.W. DUDLEY	
DETAILS	BY R. ANDRASEK	CHECKED T.W. DUDLEY	
QUANTITIES	BY N. MORCILLO	CHECKED Y. KIM	

CITY OF RIVERSIDE

G.J. NASCIMENTO
PROJECT ENGINEER

BRIDGE NO. 56C-55
POST MILE

VICTORIA AVENUE BRIDGE
SEISMIC RETROFIT
ARCH SHOE RETROFIT DETAILS 3

ORIGINAL SCALE IN INCHES FOR REDUCED PLANS 0 1 2 3

CU
EA

DISREGARD PRINTS BEARING EARLIER REVISION DATES →

REVISION DATES (PRELIMINARY STAGE ONLY)

SHEET 23 OF 62

INDEXED 12-6-04 JFH

DIST	COUNTY	ROUTE	POST MILES TOTAL PROJECT	SHEET NO.	TOTAL SHEETS
8	Riv	LOC			

REGISTERED CIVIL ENGINEER

12/20/02
PLANS APPROVAL DATE

REGISTERED PROFESSIONAL ENGINEER T.W. DUDLEY No. 39514 Exp. 12/31/05 CIVIL STATE OF CALIFORNIA

CITY OF RIVERSIDE
DEPARTMENT OF PUBLIC WORKS
3900 Main Street
Riverside, California 92522

LIM & NASCIMENTO ENGINEERING
12 Mauchly, Bldg L
Irvine, California 92618

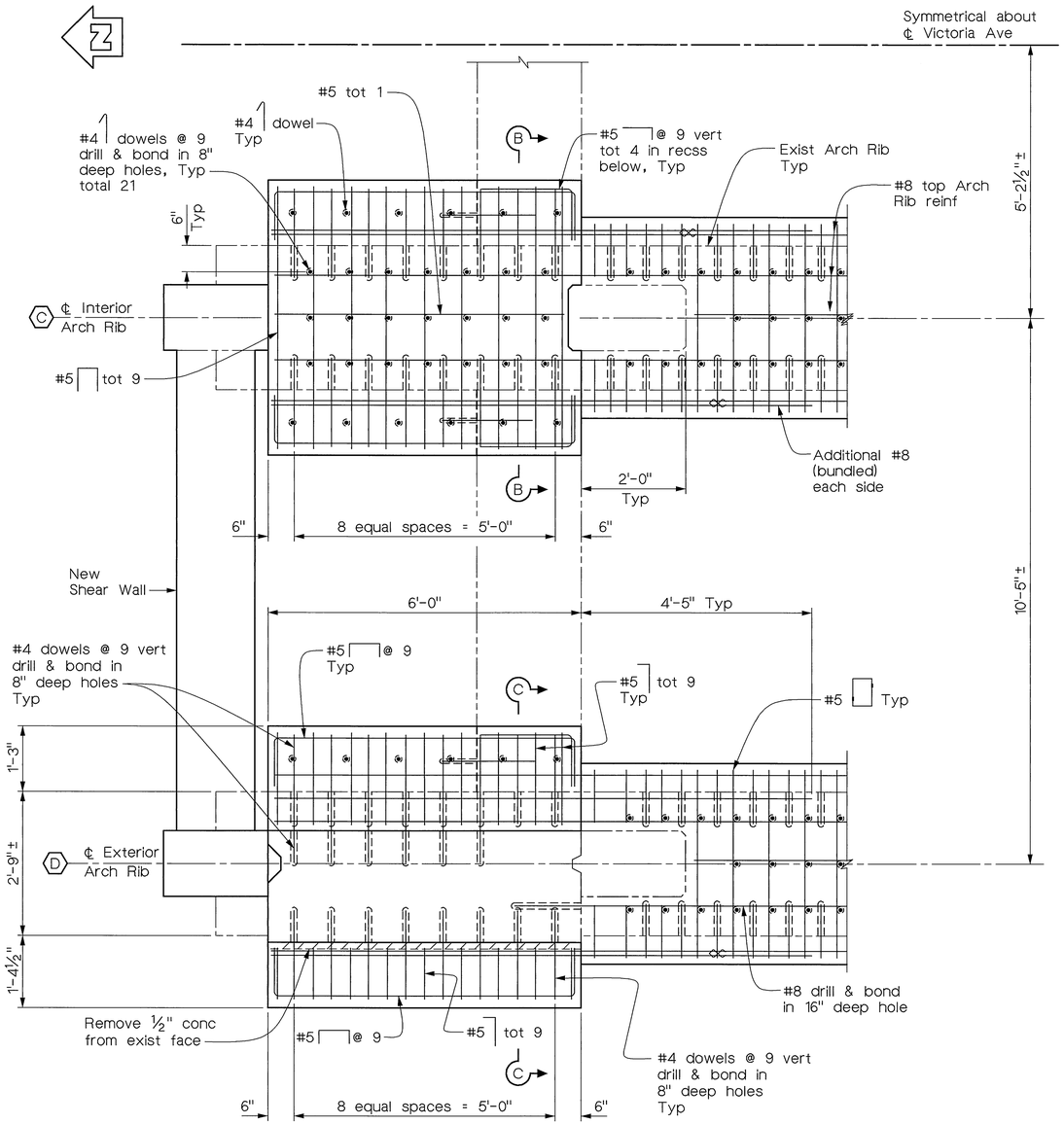

PART PLAN - PIERS 6 & 33
¾" = 1'-0"

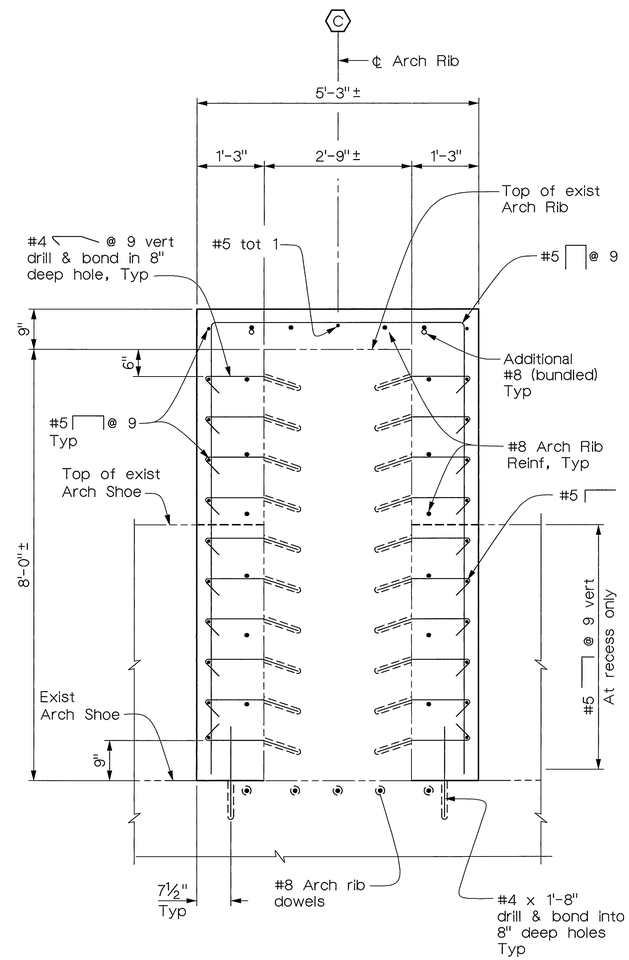

SECTION B-B
¾" = 1'-0"

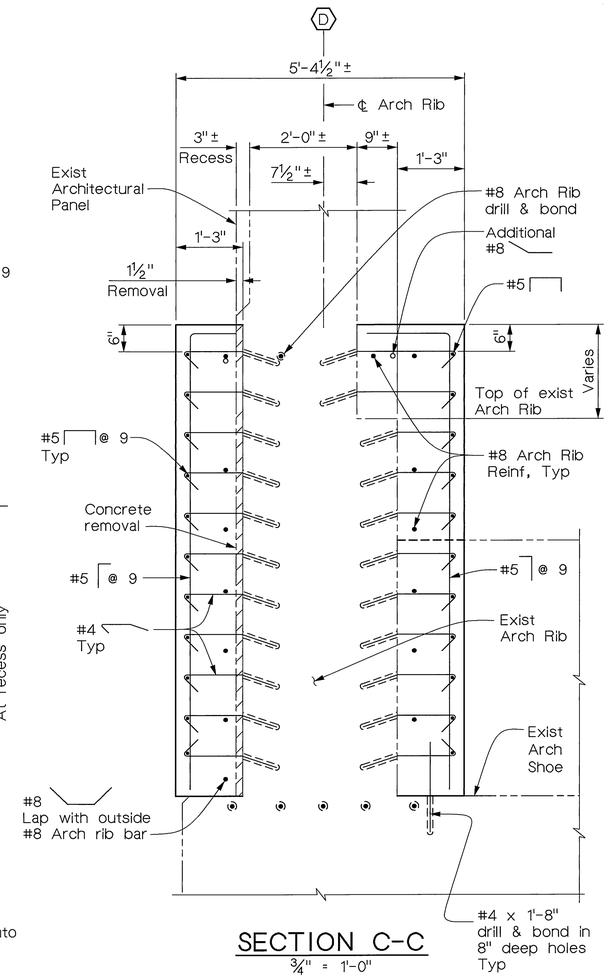

SECTION C-C
¾" = 1'-0"

For information not shown see "Section B-B"

Note:
The Contractor shall verify all controlling field dimensions before ordering or fabricating any material.

MIKE KATUSIAN
DESIGN OVERSIGHT
12/20/02
SIGN OFF DATE

	BY	CHECKED
DESIGN	M. CHAR	T.W. DUDLEY
DETAILS	R. ANDRASEK	T.W. DUDLEY
QUANTITIES	N. MORCILLO	Y. KIM

ORIGINAL SCALE IN INCHES FOR REDUCED PLANS 0 1 2 3

CITY OF RIVERSIDE

G.J. NASCIMENTO
PROJECT ENGINEER

CU
EA

BRIDGE NO. 56C-55
POST MILE

VICTORIA AVENUE BRIDGE
SEISMIC RETROFIT
ARCH SHOE RETROFIT DETAILS 4

DISREGARD PRINTS BEARING EARLIER REVISION DATES →

REVISION DATES (PRELIMINARY STAGE ONLY)

SHEET 24 OF 62

INDEXED 12-6-04 LH

DIST	COUNTY	ROUTE	POST MILES TOTAL PROJECT	SHEET NO.	TOTAL SHEETS
8	Riv	LOC			

REGISTERED CIVIL ENGINEER

12/20/02
PLANS APPROVAL DATE

REGISTERED PROFESSIONAL ENGINEER T.W. DUDLEY No. 39514 Exp. 12/31/05 CIVIL STATE OF CALIFORNIA

CITY OF RIVERSIDE
DEPARTMENT OF PUBLIC WORKS
3900 Main Street
Riverside, California 92522

LIM & NASCIMENTO ENGINEERING
12 Mauchly, Bldg L
Irvine, California 92618

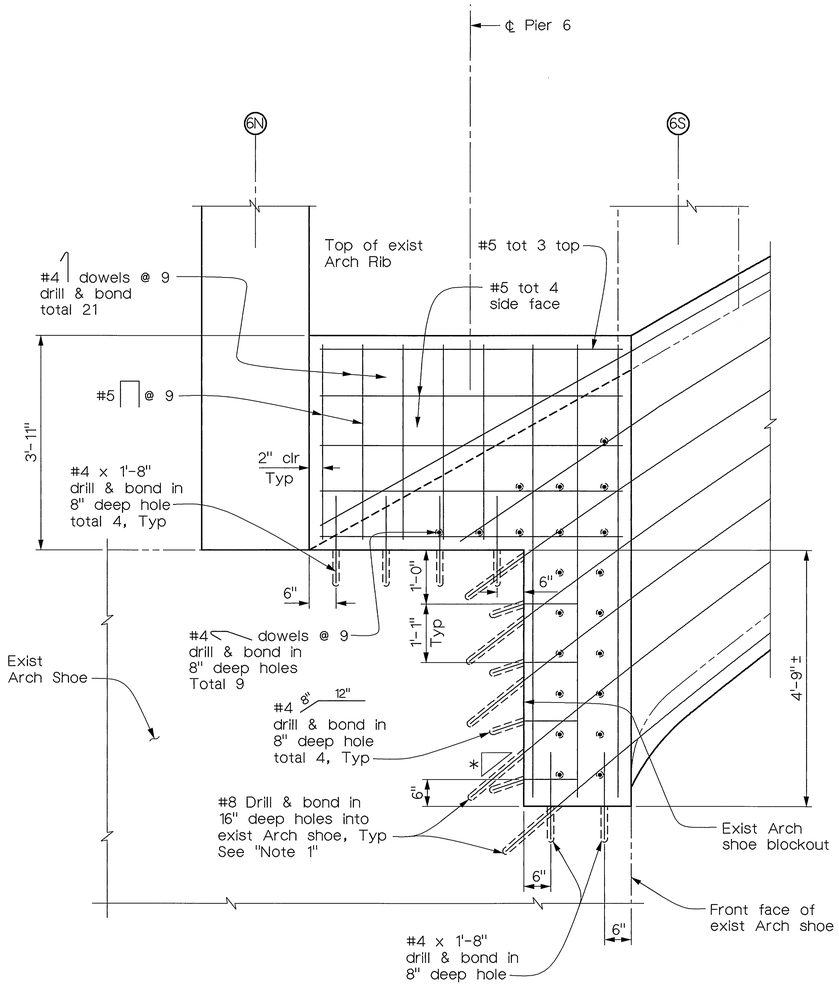

Note:

ELEVATION AT INTERIOR ARCH RIB

3/4" = 1'-0"

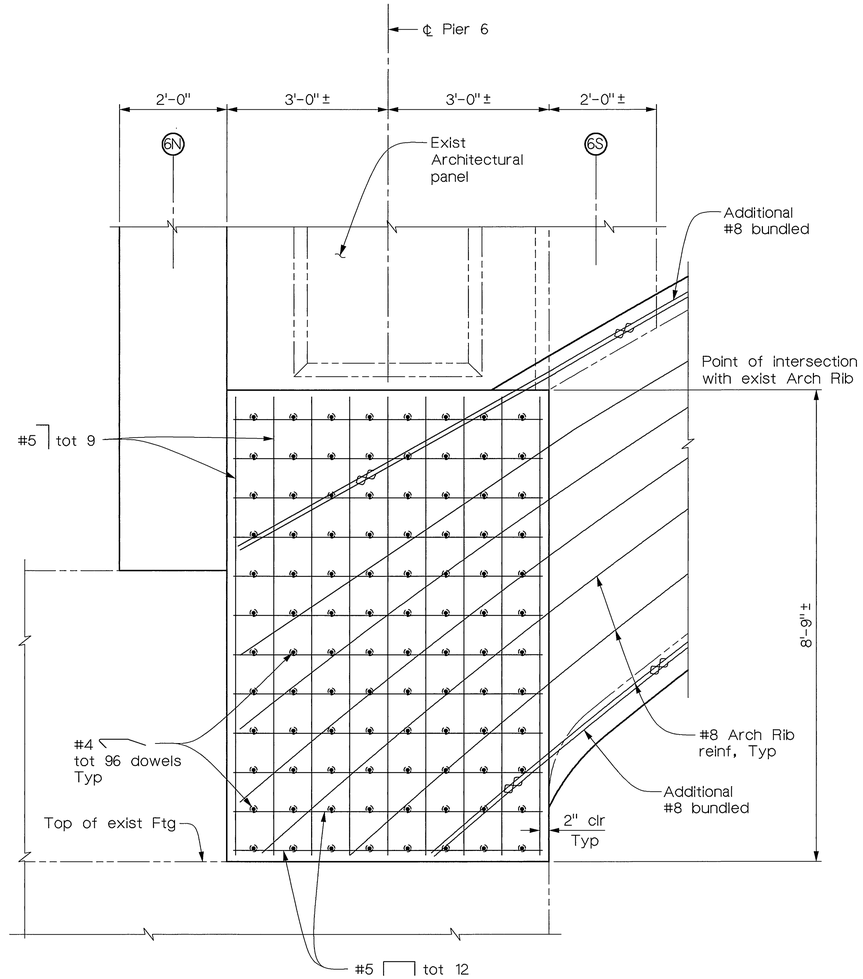

ELEVATION AT EXTERIOR ARCH RIB

3/4" = 1'-0"

(Exterior face shown, for Interior face see "Elevation At Interior Arch Rib")

Note:
The Contractor shall verify all controlling field dimensions before ordering or fabricating any material.

MIKE KATUSIAN
DESIGN OVERSIGHT
12/20/02
SIGN OFF/DATE

	BY	CHECKED
DESIGN	M. CHAR	T.W. DUDLEY
DETAILS	R. ANDRASEK	T.W. DUDLEY
QUANTITIES	N. MORCILLO	Y. KIM

CITY OF RIVERSIDE

G.J. NASCIMENTO
PROJECT ENGINEER

BRIDGE NO. 56C-55
POST MILE

VICTORIA AVENUE BRIDGE
SEISMIC RETROFIT
ARCH RIB RETROFIT DETAILS 5

ORIGINAL SCALE IN INCHES FOR REDUCED PLANS 0 1 2 3

CU
EA

DISREGARD PRINTS BEARING EARLIER REVISION DATES →

REVISION DATES (PRELIMINARY STAGE ONLY)

SHEET 25 OF 62

INDEXED 12-6-04 LPH

DIST	COUNTY	ROUTE	POST MILES TOTAL PROJECT	SHEET NO.	TOTAL SHEETS
8	Riv	LOC			

REGISTERED CIVIL ENGINEER

12/20/02
PLANS APPROVAL DATE

REGISTERED PROFESSIONAL ENGINEER T.W. DUDLEY No. 39514 Exp. 12/31/05 CIVIL STATE OF CALIFORNIA

CITY OF RIVERSIDE
DEPARTMENT OF PUBLIC WORKS
3900 Main Street
Riverside, California 92522

LIM & NASCIMENTO ENGINEERING
12 Mauchly, Bldg L
Irvine, California 92618

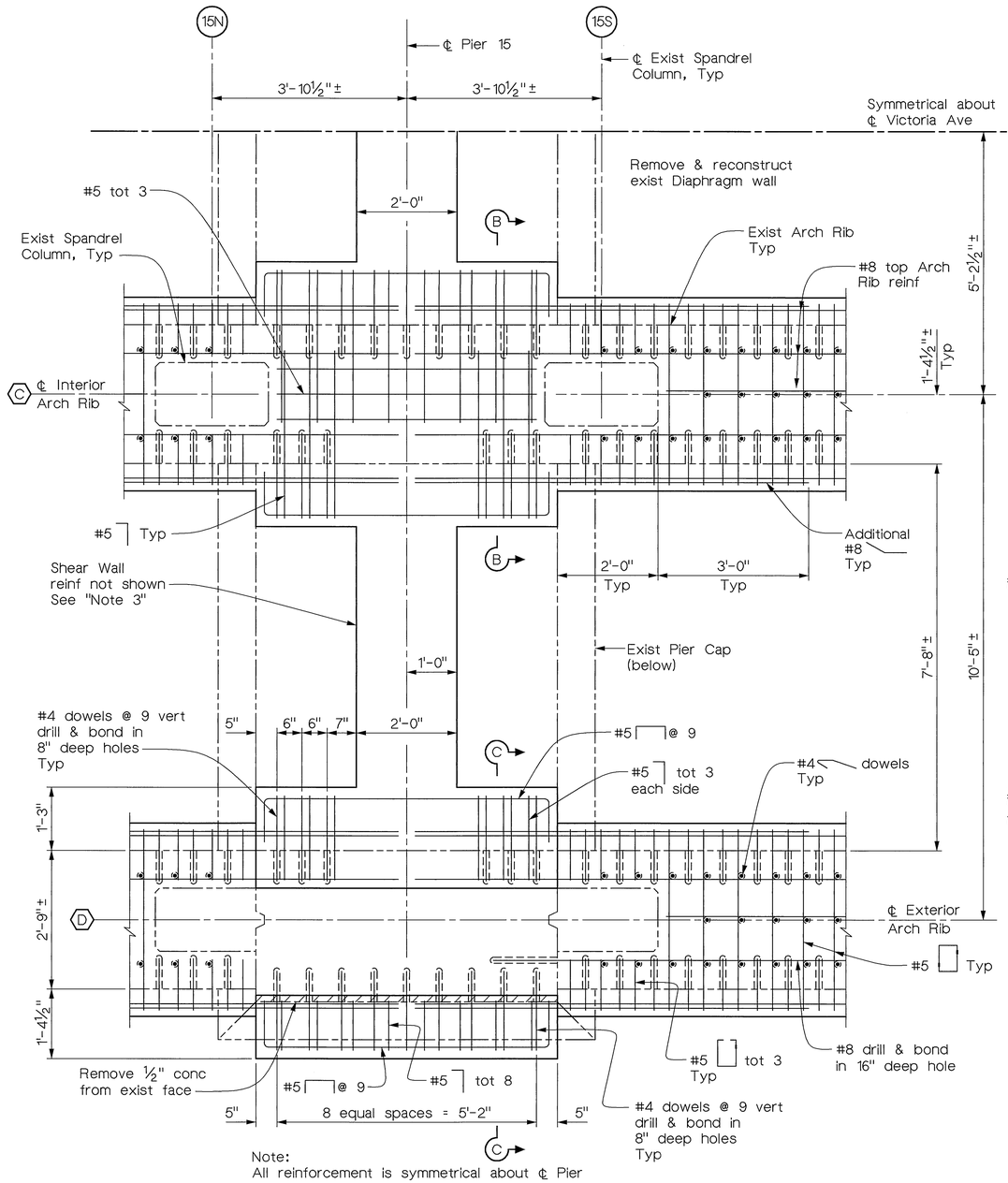

Note:
All reinforcement is symmetrical about ℄ Pier

PART PLAN - PIERS 15 & 24

¾" = 1'-0"

(Deck slab not shown)

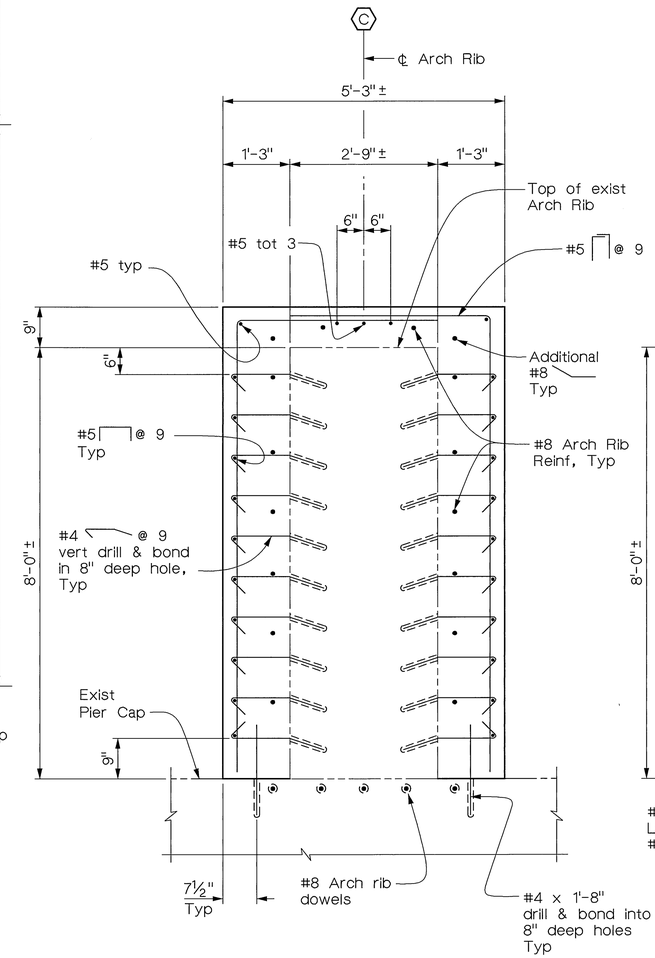

SECTION B-B

¾" = 1'-0"

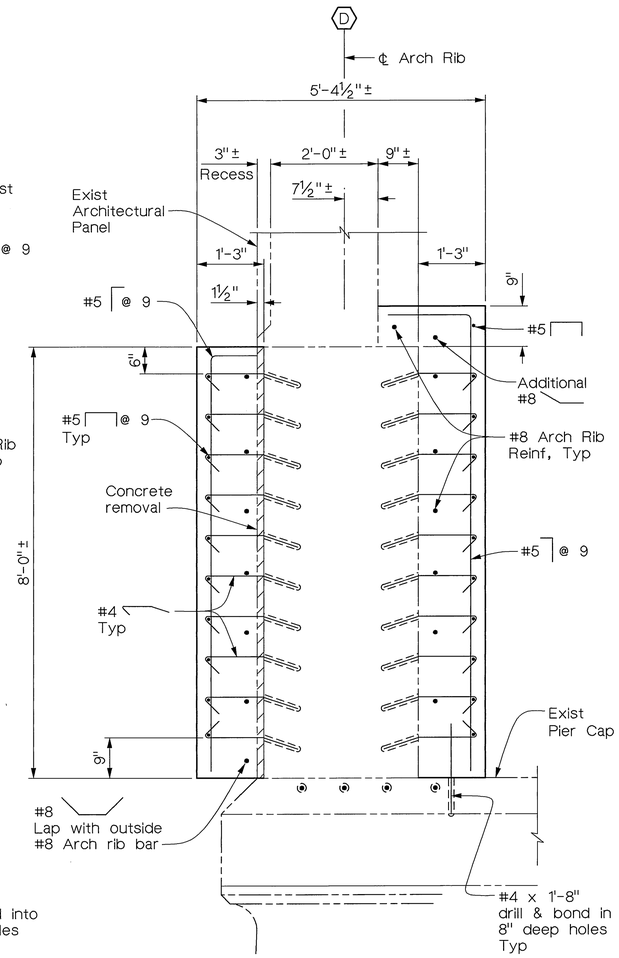

SECTION C-C

¾" = 1'-0"

Note:
The Contractor shall verify all controlling field dimensions before ordering or fabricating any material.

MIKE KATUSIAN
DESIGN OVERSIGHT
12/20/02
SIGN OFF DATE

	BY	CHECKED
DESIGN	M. CHAR	T.W. DUDLEY
DETAILS	R. ANDRASEK	T.W. DUDLEY
QUANTITIES	N. MORCILLO	Y. KIM

CITY OF RIVERSIDE

G.J. NASCIMENTO
PROJECT ENGINEER

BRIDGE NO. 56C-55
POST MILE

VICTORIA AVENUE BRIDGE
SEISMIC RETROFIT
ARCH RIB RETROFIT DETAILS 1

ORIGINAL SCALE IN INCHES FOR REDUCED PLANS 0 1 2 3

CU
EA

DISREGARD PRINTS BEARING EARLIER REVISION DATES →

REVISION DATES (PRELIMINARY STAGE ONLY)

SHEET 26 OF 62

INDEXED 12-6-04 LH

DIST	COUNTY	ROUTE	POST MILES TOTAL PROJECT	SHEET NO.	TOTAL SHEETS
8	Riv	LOC			

REGISTERED CIVIL ENGINEER

12/20/02
PLANS APPROVAL DATE

REGISTERED PROFESSIONAL ENGINEER
T.W. DUDLEY
No. 39514
Exp. 12/31/05
CIVIL
STATE OF CALIFORNIA

CITY OF RIVERSIDE
DEPARTMENT OF PUBLIC WORKS
3900 Main Street
Riverside, California 92522

LIM & NASCIMENTO ENGINEERING
12 Mauchly, Bldg L
Irvine, California 92618

Notes:

1. Drill oversized holes to fit rebar.
2. For Shear Wall details, see "Shear Wall Details 1" sheet.
3. For Arch Rib details, see "Arch Shoe Retrofit Details 2" sheet.
4. Placement of dowels & ties shall be governed by the 9" spacing and direction of #4 dowels drilled into Arch Rib soffit. #5 ties to be placed radially & equally spaced between adjacent dowels.
5. #4 side face dowels shall be staggered between top & bottom dowels & aligned with #5 ties.

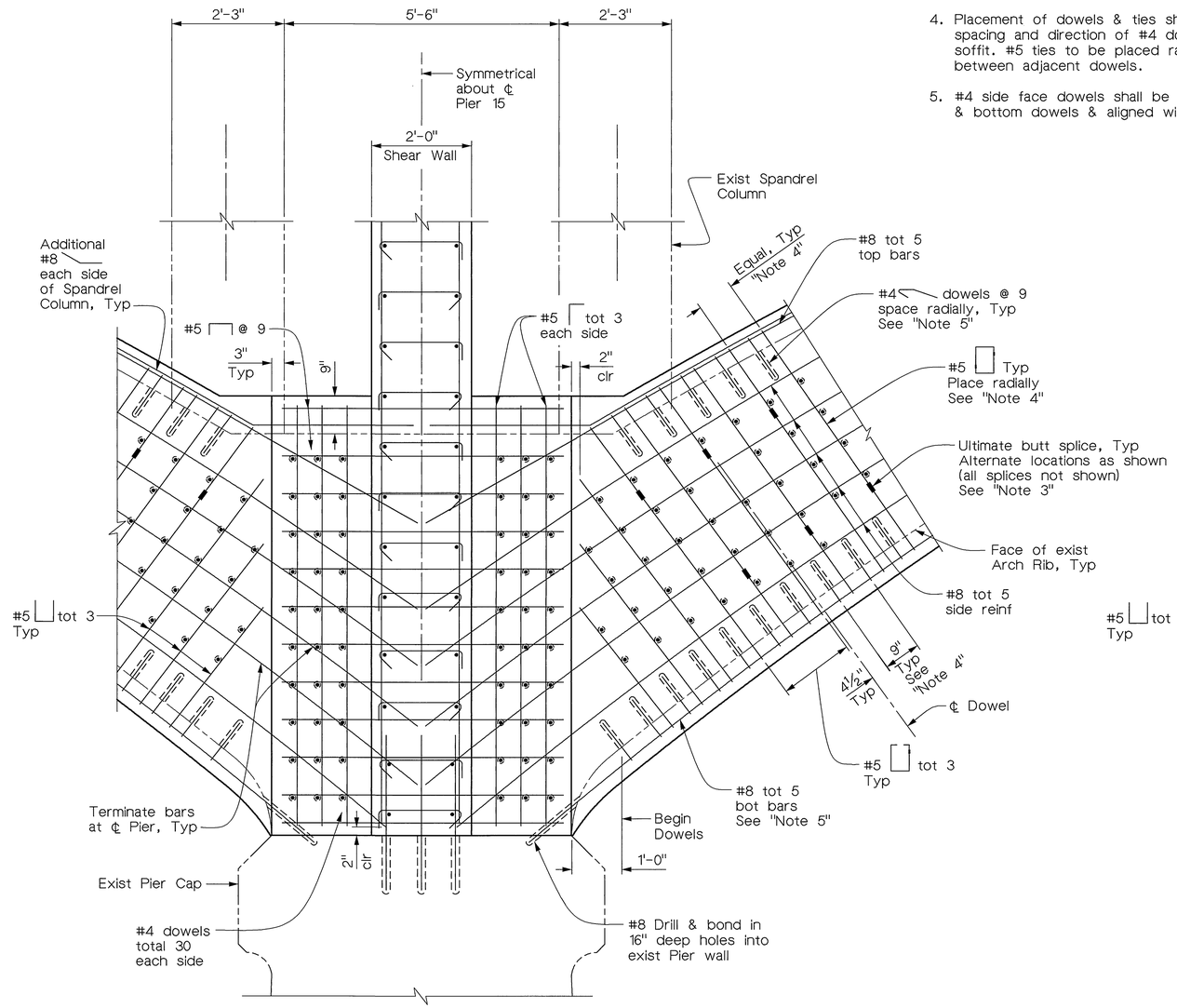

SECTION AT INTERIOR RIB

¾" = 1'-0"

For information not shown see "Note 3"

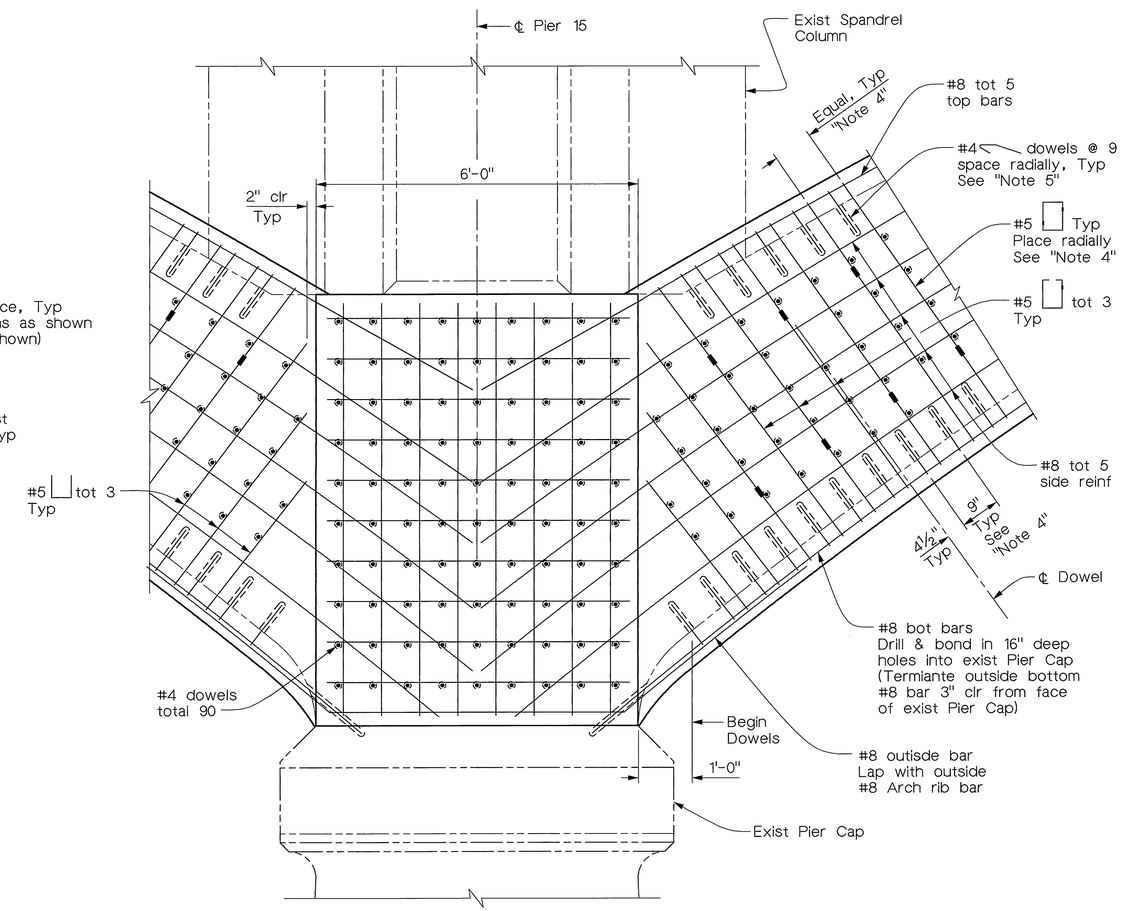

SECTION AT EXTERIOR RIB

¾" = 1'-0"

For information not shown see "Section At Interior Rib" & "Note 3"

Note:
The Contractor shall verify all controlling field dimensions before ordering or fabricating any material.

MIKE KATUSIAN
DESIGN OVERSIGHT
12/20/02
SIGN/OFF DATE

	BY	CHECKED
DESIGN	M. CHAR	T.W. DUDLEY
DETAILS	R. ANDRASEK	T.W. DUDLEY
QUANTITIES	N. MORCILLO	Y. KIM

CITY OF RIVERSIDE

G.J. NASCIMENTO
PROJECT ENGINEER

BRIDGE NO. 56C-55
POST MILE

VICTORIA AVENUE BRIDGE
SEISMIC RETROFIT
ARCH RIB RETROFIT DETAILS 2

ORIGINAL SCALE IN INCHES FOR REDUCED PLANS 0 1 2 3

CU
EA

DISREGARD PRINTS BEARING EARLIER REVISION DATES →

REVISION DATES (PRELIMINARY STAGE ONLY)

SHEET 27 OF 62

INDEXED 12-6-04 LH

DIST	COUNTY	ROUTE	POST MILES TOTAL PROJECT	SHEET NO.	TOTAL SHEETS
8	Riv	LOC			

REGISTERED CIVIL ENGINEER

12/20/02
PLANS APPROVAL DATE

REGISTERED PROFESSIONAL ENGINEER T.W. DUDLEY No. 39514 Exp. 12/31/05 CIVIL STATE OF CALIFORNIA

CITY OF RIVERSIDE
DEPARTMENT OF PUBLIC WORKS
3900 Main Street
Riverside, California 92522

LIM & NASCIMENTO ENGINEERING
12 Mauchly, Bldg L
Irvine, California 92618

Notes:

1. Arch span between Piers 15 and 24 shown. Arch spans between Piers 6 and 15 & Piers 24 and 33 similar.
2. For "Sections C-C, D-D, E-E, F-F, G-G, H-H & J-J", see "Infill Wall Details 2" sheet.
3. Details of Infill wall construction between Bents 19 and 20 similar to adjacent Spandrel Walls except for dowel spacing.
4. Details for Spandrel Walls and Infill Walls between Piers 15 & 24 shown. Wall details between Piers 6 & 15, and Piers 24 & 33, similar.
5. Reinforcement not shown for clarity.

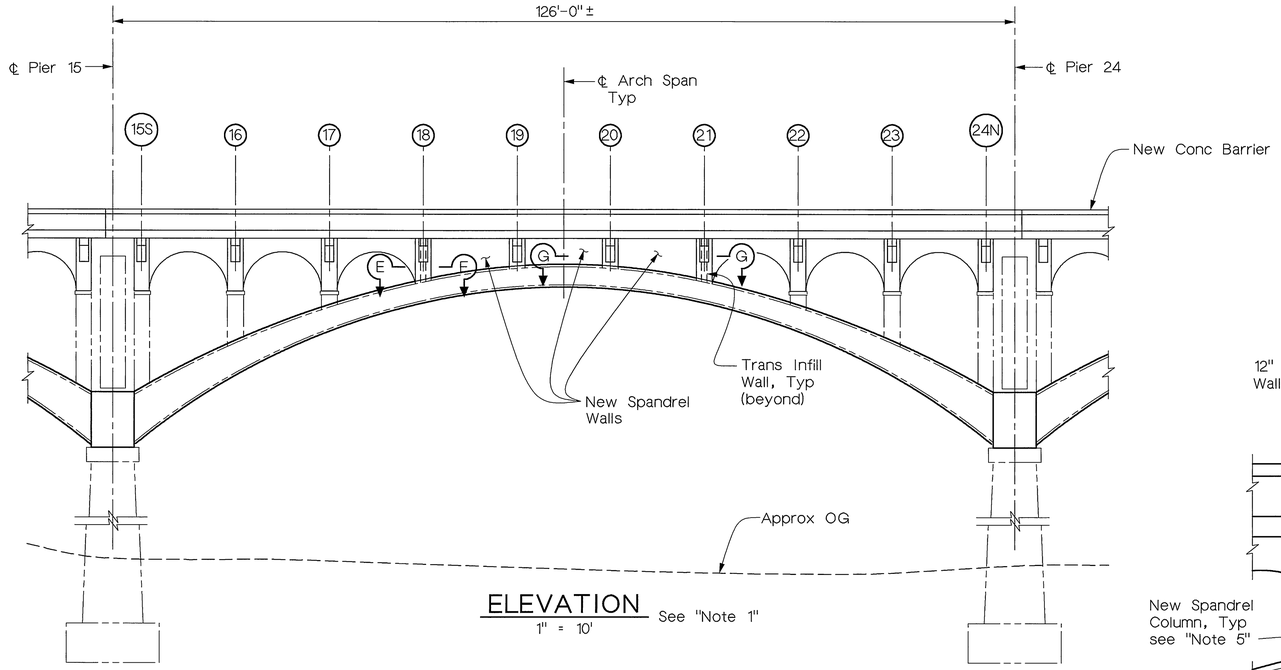

ELEVATION
1" = 10'
See "Note 1"

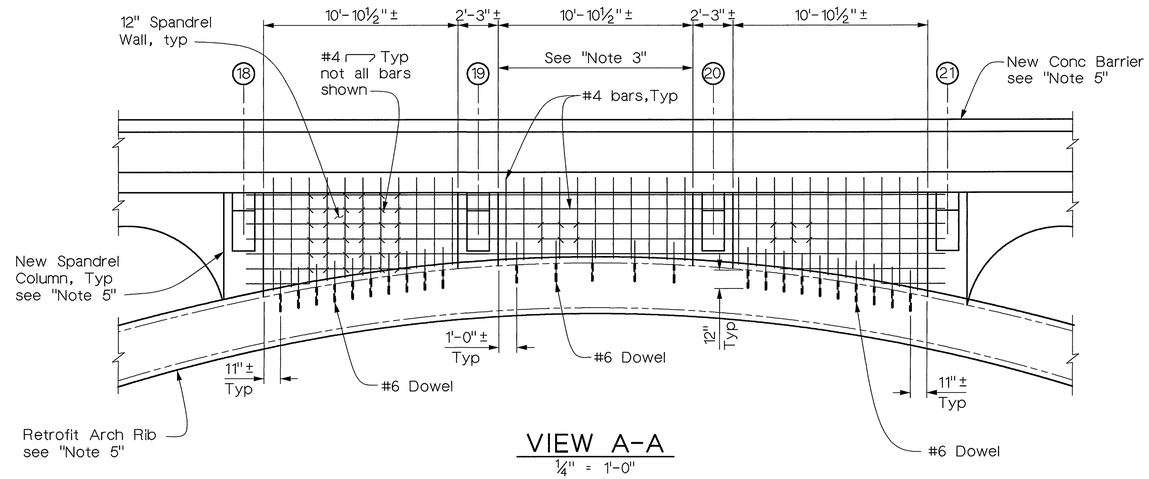

VIEW A-A
¼" = 1'-0"

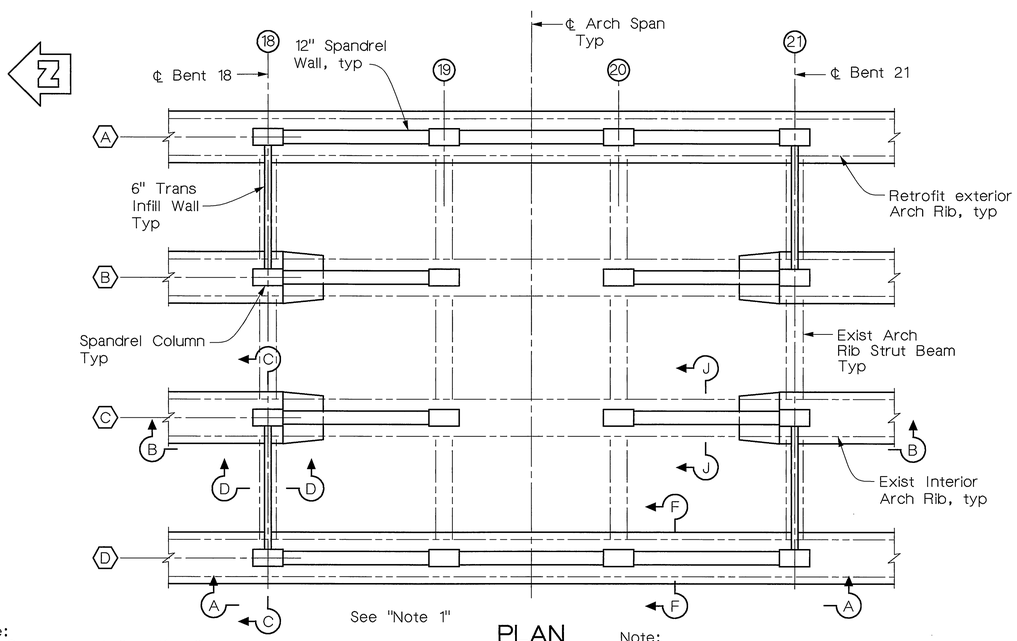

PLAN
3/16" = 1'-0"

Note:
The Contractor shall verify all controlling field dimensions before ordering or fabricating any material.

Note:
Deck slab not shown.

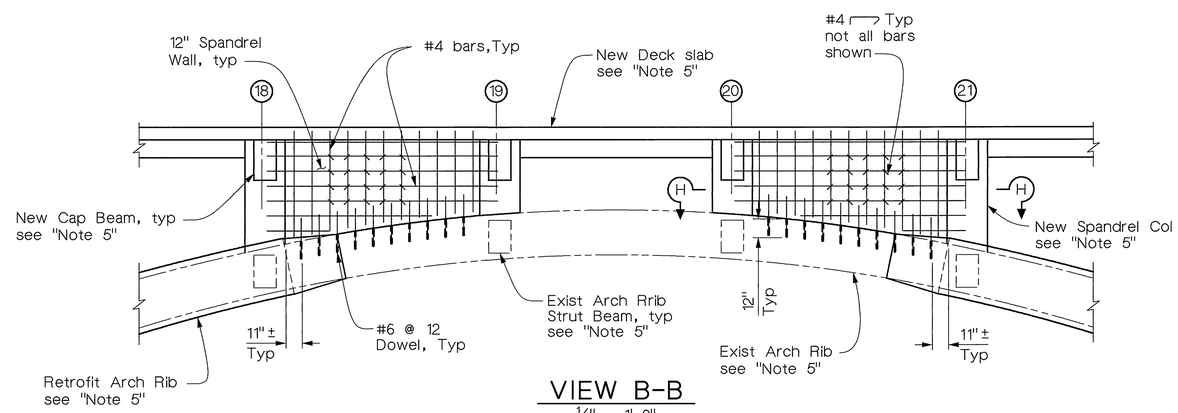

VIEW B-B
¼" = 1'-0"

Note:
For information not shown see "View A-A"

MIKE KATUSIAN DESIGN OVERSIGHT 12/20/02 SIGN OFF DATE	DESIGN BY Y. KIM	CHECKED T.W. DUDLEY	CITY OF RIVERSIDE
	DETAILS BY R. ANDRASEK	CHECKED T.W. DUDLEY	
	QUANTITIES BY N. MORCILLO	CHECKED Y. KIM	

G.J. NASCIMENTO
PROJECT ENGINEER

CU
EA

ORIGINAL SCALE IN INCHES FOR REDUCED PLANS 0 1 2 3

BRIDGE NO. 56C-55
POST MILE

DISREGARD PRINTS BEARING EARLIER REVISION DATES →

REVISION DATES (PRELIMINARY STAGE ONLY)

SHEET 28 OF 62

VICTORIA AVENUE BRIDGE
SEISMIC RETROFIT
INFILL WALL DETAILS 1

INDEXED 12-6-04 LH

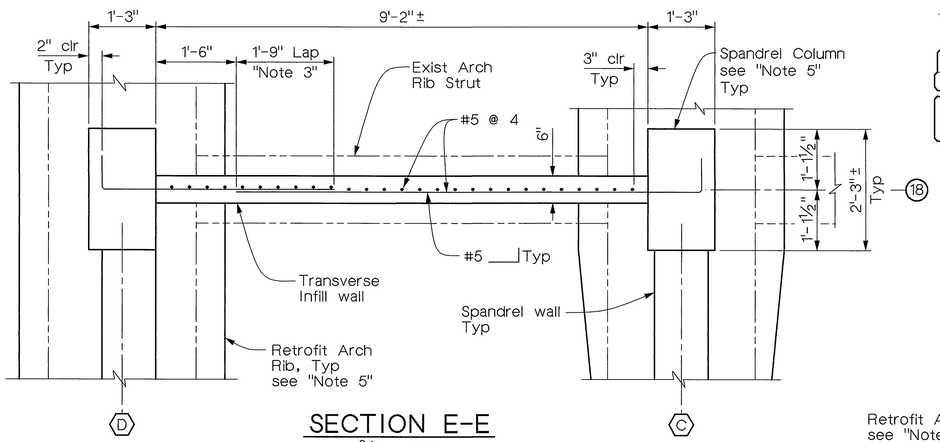

SECTION E-E
¾" = 1'-0"

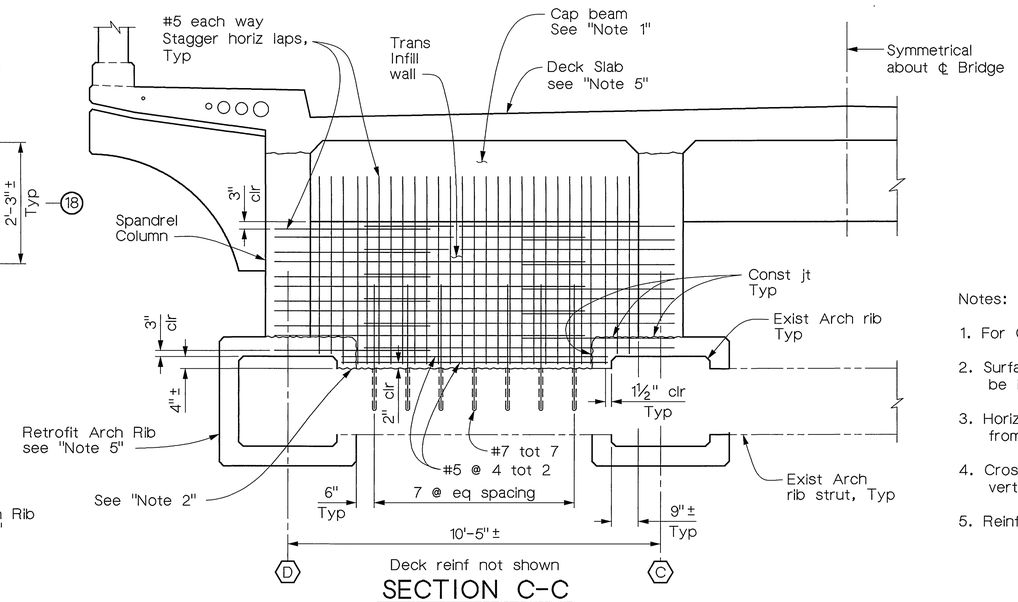

Deck reinf not shown
SECTION C-C
½" = 1'-0"

Notes:

1. For Cap Beam details, see "Cap Beam Details" sheet.
2. Surface of exist Arch Rib and Arch Rib Strut shall be intentionally roughened.
3. Horizontal lap splice locations shall be alternated from one side of infill wall to the other.
4. Cross ties shall be hooked around both vertical & horizontal reinforcement.
5. Reinforcement not shown for clarity.

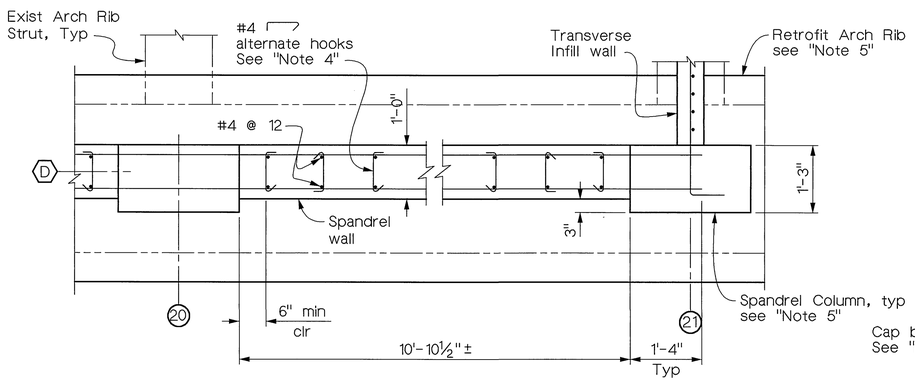

SECTION G-G
¾" = 1'-0"

Left Exterior Spandrel Wall shown
Right Exterior Spandrel Wall similar

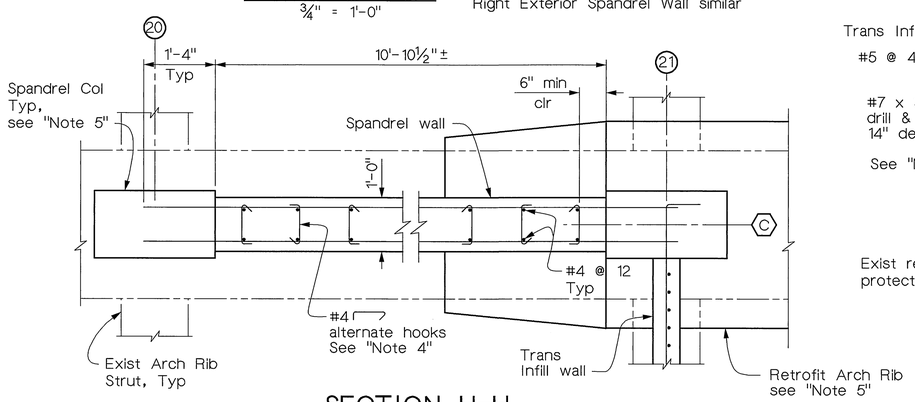

SECTION H-H
¾" = 1'-0"

Right Interior Spandrel Wall shown
Left Interior Spandrel Wall similar

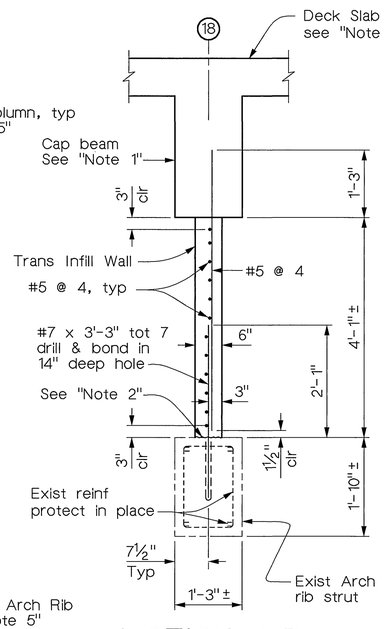

SECTION D-D
¾" = 1'-0"

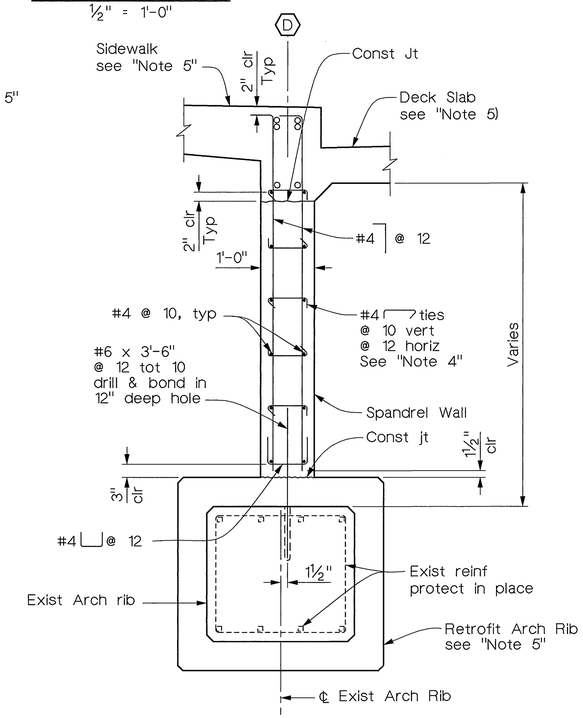

SECTION F-F
¾" = 1'-0"

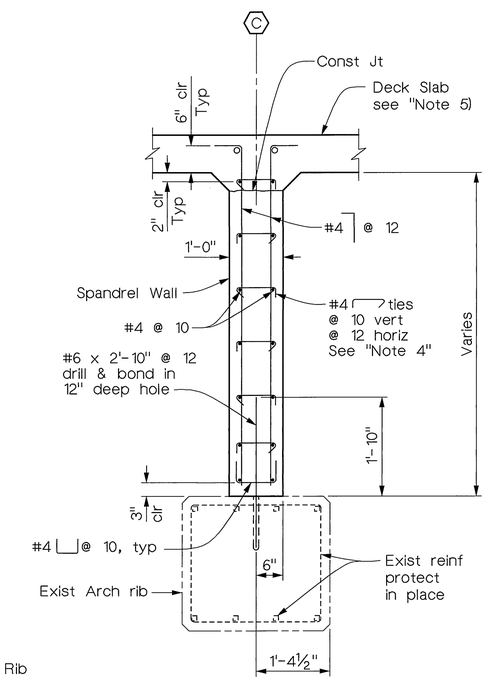

SECTION J-J
¾" = 1'-0"

Note:
The Contractor shall verify all controlling field dimensions before ordering or fabricating any material.

DIST	COUNTY	ROUTE	POST MILES TOTAL PROJECT	SHEET NO.	TOTAL SHEETS
8	Riv	LOC			

REGISTERED CIVIL ENGINEER
12/20/02
PLANS APPROVAL DATE
REGISTERED PROFESSIONAL ENGINEER T.W. DUDLEY No. 39514 Exp. 12/31/05 CIVIL STATE OF CALIFORNIA

CITY OF RIVERSIDE
DEPARTMENT OF PUBLIC WORKS
3900 Main Street
Riverside, California 92522

LIM & NASCIMENTO ENGINEERING
12 Mauchly, Bldg L
Irvine, California 92618

MIKE KATUSIAN
DESIGN OVERSIGHT
12/20/02
SIGN OFF DATE

	BY	CHECKED
DESIGN	M. CHAR	T.W. DUDLEY
DETAILS	R. ANDRASEK	T.W. DUDLEY
QUANTITIES	N. MORCILLO	Y. KIM

CITY OF RIVERSIDE

G.J. NASCIMENTO
PROJECT ENGINEER

BRIDGE NO. 56C-55
POST MILE

VICTORIA AVENUE BRIDGE
SEISMIC RETROFIT
INFILL WALL DETAILS 2

ORIGINAL SCALE IN INCHES FOR REDUCED PLANS 0 1 2 3

CU
EA

DISREGARD PRINTS BEARING EARLIER REVISION DATES →

REVISION DATES (PRELIMINARY STAGE ONLY)

SHEET 29 OF 62

INDEXED 12-6-04 LPH

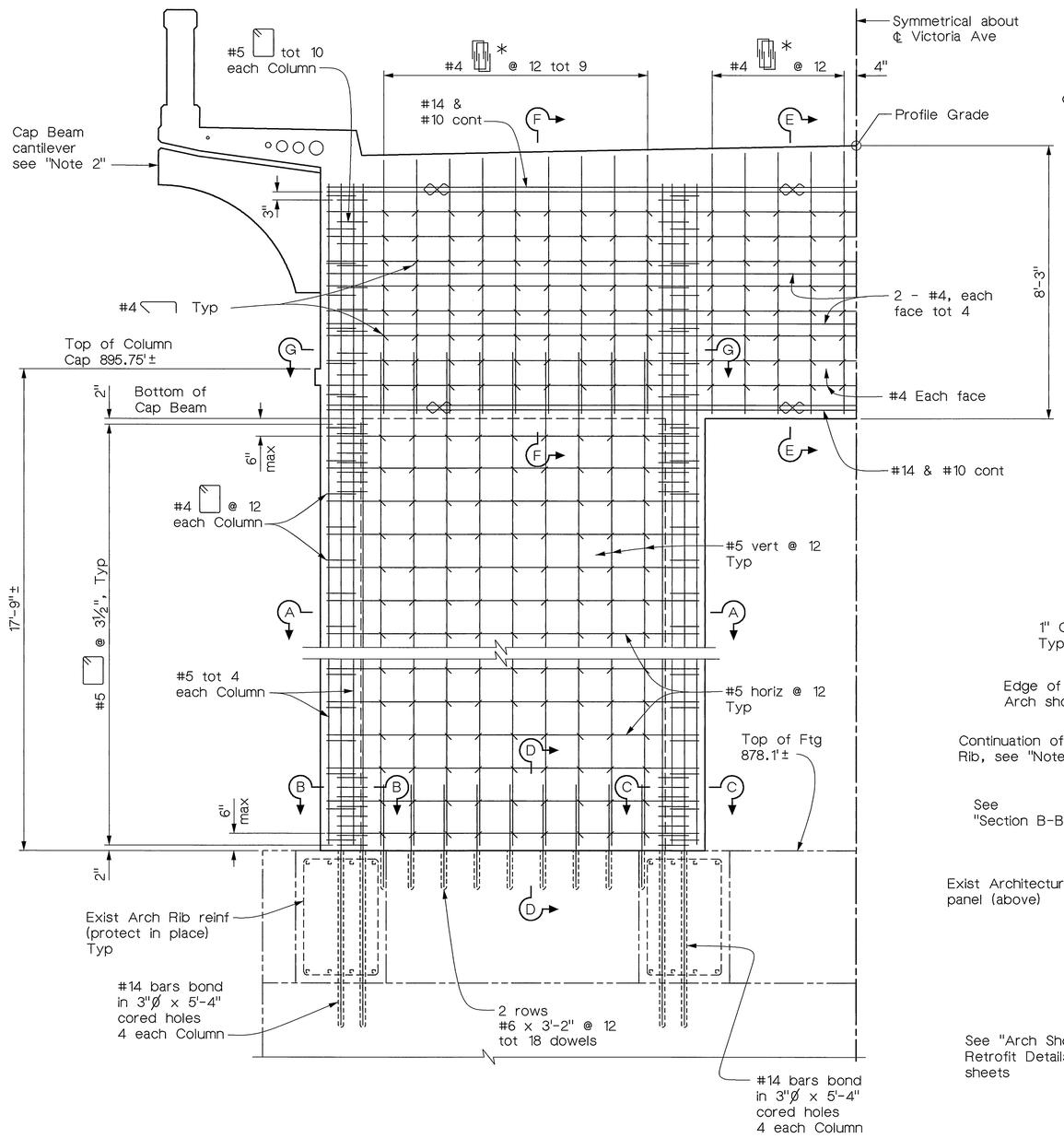

SHEAR WALL ELEVATION

½" = 1'-0"

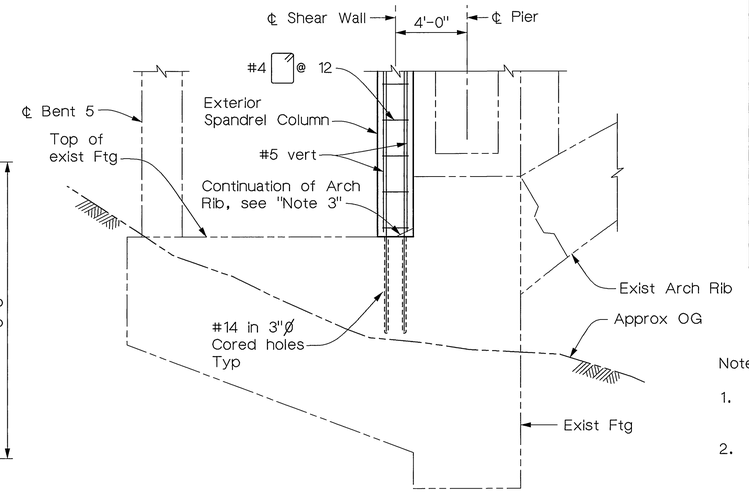

(Bent 6 shown, Bent 33 similar)

END ELEVATION

¼" = 1'-0"

Notes:

1. For Sections A-A, B-B, C-C, D-D, E-E, F-F, & G-G, see "Shear Wall Details 2" sheet.
2. For details of Cap Beam cantilever see "Cap Beam Details" sheet.
3. Remove interfering portion of Arch Rib, protecting exist reinf steel in place, to provide for construction of new shear walls.

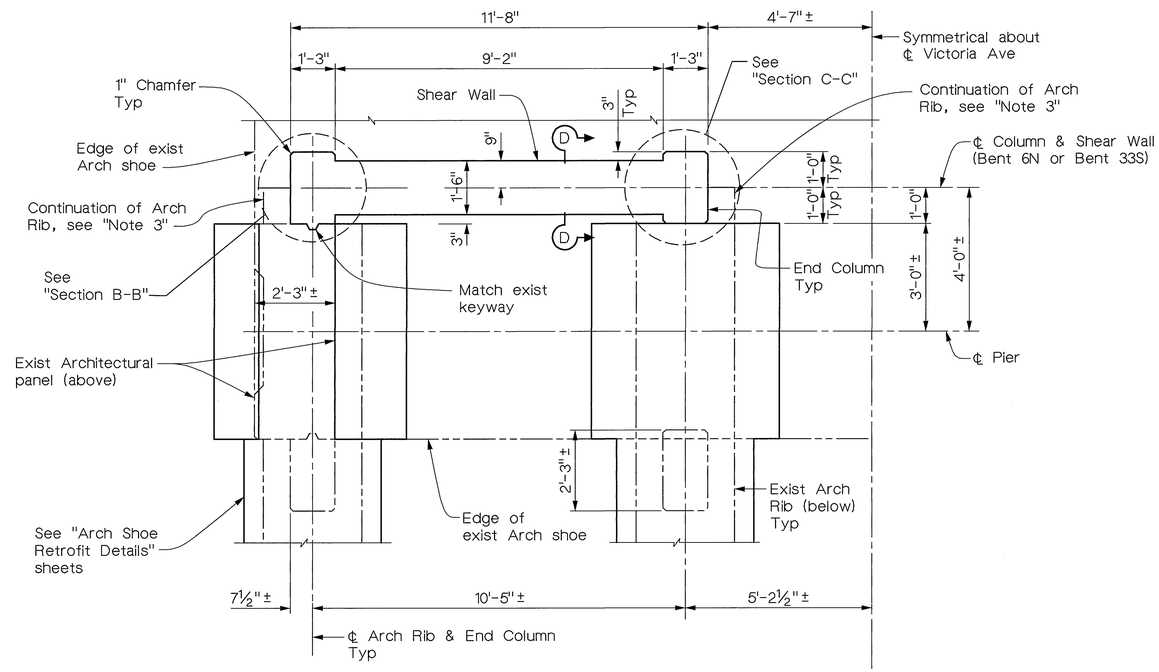

PART PLAN - PIER 6 & 33

½" = 1'-0"

* Adjust spacing to clear pipe assembly

Note:
The Contractor shall verify all controlling field dimensions before ordering or fabricating any material.

DIST	COUNTY	ROUTE	POST MILES TOTAL PROJECT	SHEET NO.	TOTAL SHEETS
8	Riv	LOC			

REGISTERED CIVIL ENGINEER

12/20/02
PLANS APPROVAL DATE

REGISTERED PROFESSIONAL ENGINEER T.W. DUDLEY No. 39514 Exp. 12/31/05 CIVIL STATE OF CALIFORNIA

CITY OF RIVERSIDE
DEPARTMENT OF PUBLIC WORKS
3900 Main Street
Riverside, California 92522

LIM & NASCIMENTO ENGINEERING
12 Mauchly, Bldg L
Irvine, California 92618

VICTORIA AVENUE BRIDGE
SEISMIC RETROFIT
SHEAR WALL DETAILS 1

MIKE KATUSIAN
DESIGN OVERSIGHT
12/20/02
SIGN/OFF DATE

	BY	CHECKED
DESIGN	M. CHAR	T.W. DUDLEY
DETAILS	R. ANDRASEK	T.W. DUDLEY
QUANTITIES	N. MORCILLO	Y. KIM

CITY OF RIVERSIDE

G.J. NASCIMENTO
PROJECT ENGINEER

BRIDGE NO. 56C-55
POST MILE

ORIGINAL SCALE IN INCHES FOR REDUCED PLANS 0 1 2 3

CU
EA

DISREGARD PRINTS BEARING EARLIER REVISION DATES →

REVISION DATES (PRELIMINARY STAGE ONLY)

SHEET 30 OF 62

INDEXED 12-6-04 LH

DIST	COUNTY	ROUTE	POST MILES TOTAL PROJECT	SHEET NO.	TOTAL SHEETS
8	Riv	LOC			

REGISTERED CIVIL ENGINEER

12/20/02
PLANS APPROVAL DATE

REGISTERED PROFESSIONAL ENGINEER T.W. DUDLEY No. 39514 Exp. 12/31/05 CIVIL STATE OF CALIFORNIA

CITY OF RIVERSIDE
DEPARTMENT OF PUBLIC WORKS
3900 Main Street
Riverside, California 92522

LIM & NASCIMENTO ENGINEERING
12 Mauchly, Bldg L
Irvine, California 92618

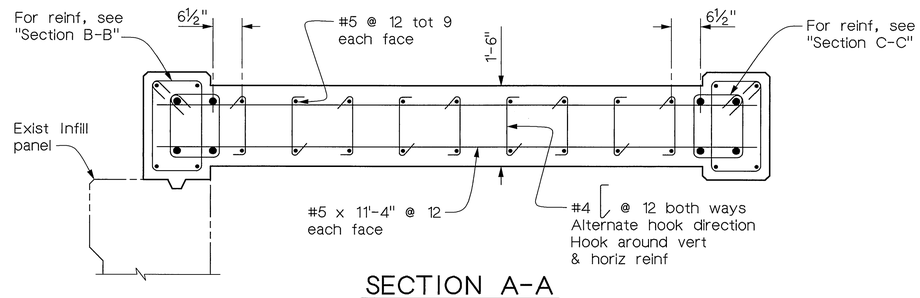

SECTION A-A
¾" = 1'-0"

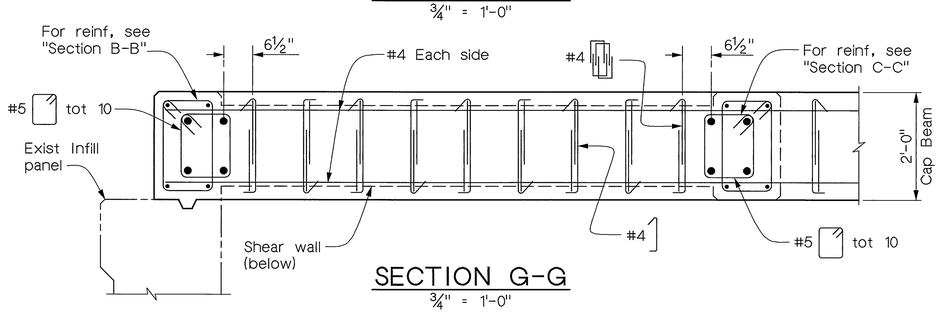

SECTION G-G
¾" = 1'-0"

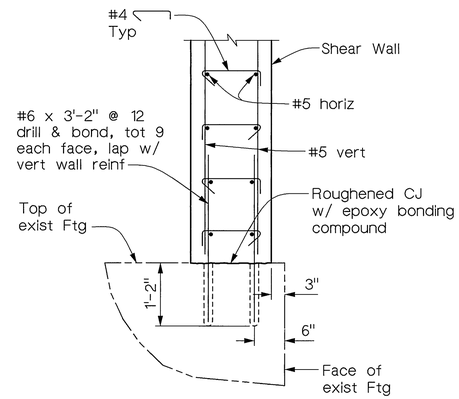

SECTION D-D
¾" = 1'-0"

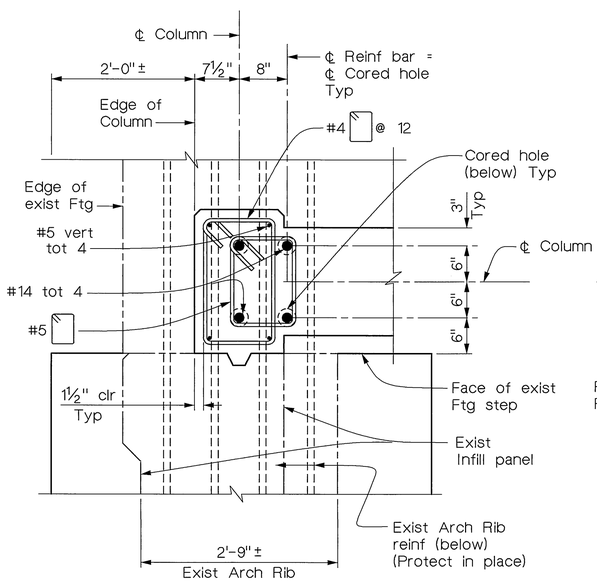

SECTION B-B
1" = 1'-0"

For shear wall reinf see "Section A-A"

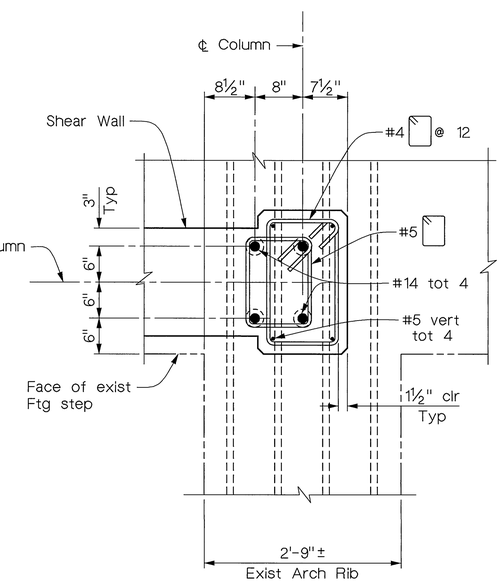

SECTION C-C
1" = 1'-0"

For information not shown see "Section B-B"

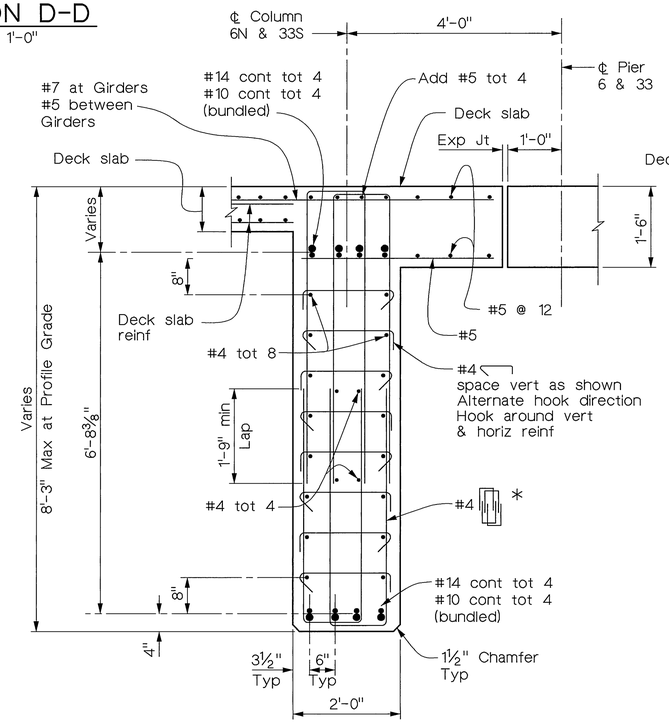

SECTION E-E
¾" = 1'-0"

* Adjust spacing to clear pipe key assembly

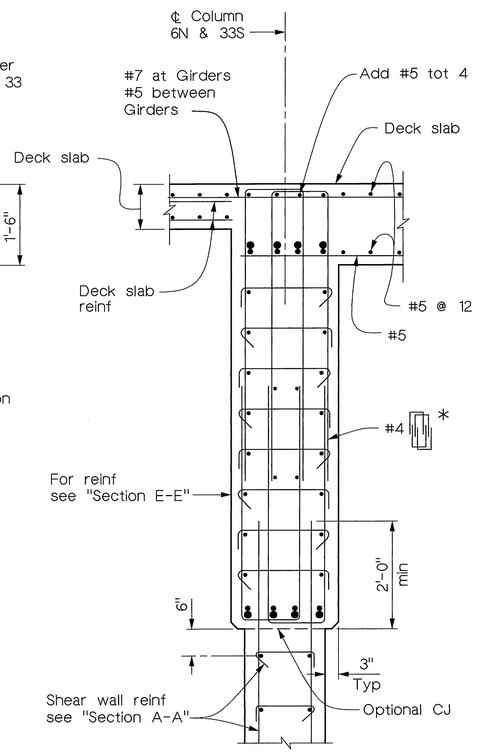

SECTION F-F
¾" = 1'-0"

Note:
The Contractor shall verify all controlling field dimensions before ordering or fabricating any material.

MIKE KATUSIAN
DESIGN OVERSIGHT
12/20/02
SIGN OFF DATE

	BY	CHECKED
DESIGN	M. CHAR	T.W. DUDLEY
DETAILS	R. ANDRASEK	T.W. DUDLEY
QUANTITIES	N. MORCILLO	Y. KIM

CITY OF RIVERSIDE

G.J. NASCIMENTO
PROJECT ENGINEER

BRIDGE NO. 56C-55
POST MILE

VICTORIA AVENUE BRIDGE
SEISMIC RETROFIT
SHEAR WALL DETAILS 2

ORIGINAL SCALE IN INCHES FOR REDUCED PLANS 0 1 2 3

CU
EA

DISREGARD PRINTS BEARING EARLIER REVISION DATES →

REVISION DATES (PRELIMINARY STAGE ONLY)

SHEET 31 OF 62

INDEXED 12-6-04 LFH

DIST	COUNTY	ROUTE	POST MILES TOTAL PROJECT	SHEET NO.	TOTAL SHEETS
8	Riv	LOC			

REGISTERED CIVIL ENGINEER

12/20/02
PLANS APPROVAL DATE

REGISTERED PROFESSIONAL ENGINEER T.W. DUDLEY No. 39514 Exp. 12/31/05 CIVIL STATE OF CALIFORNIA

CITY OF RIVERSIDE
DEPARTMENT OF PUBLIC WORKS
3900 Main Street
Riverside, California 92522

LIM & NASCIMENTO ENGINEERING
12 Mauchly, Bldg L
Irvine, California 92618

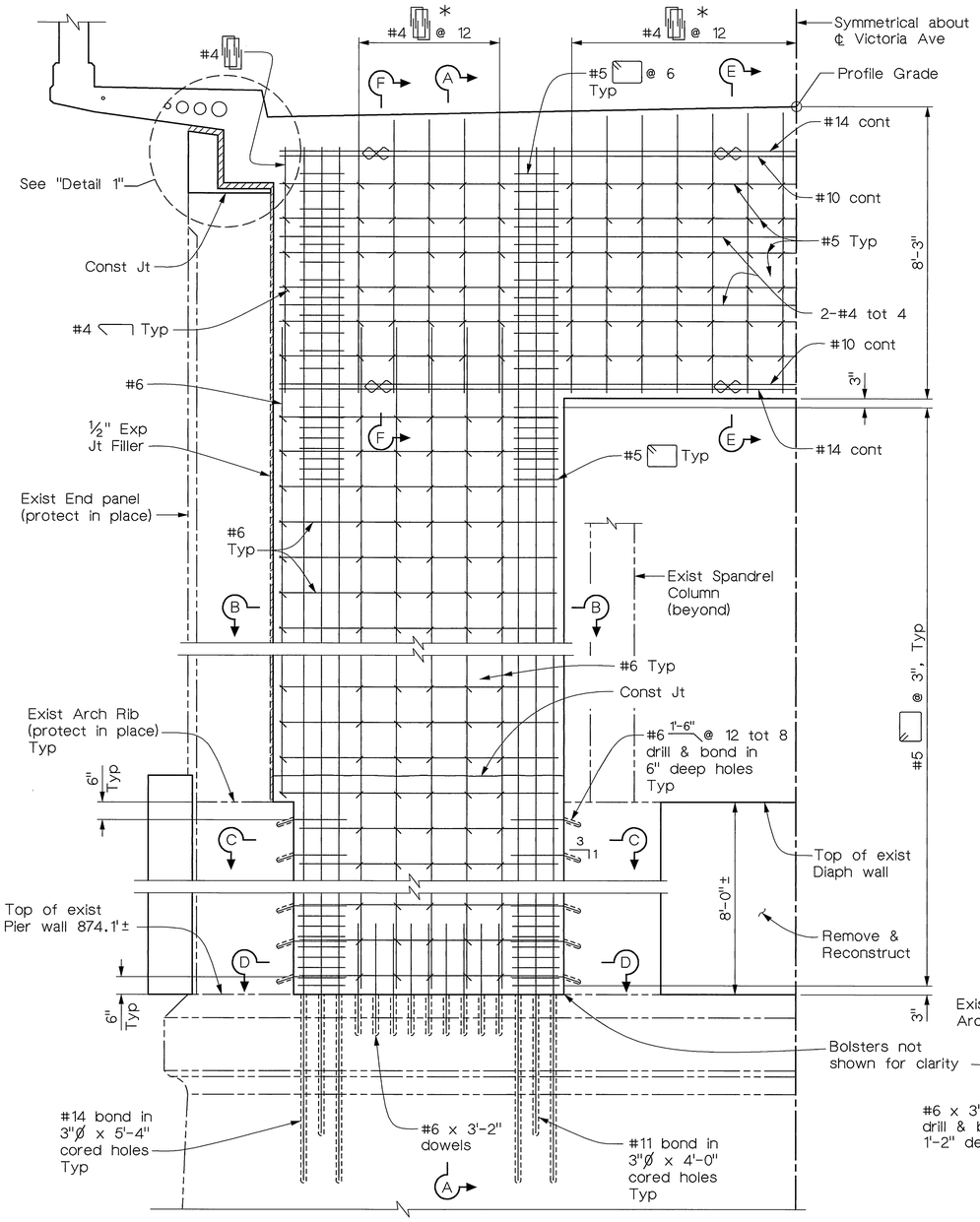

SHEAR WALL ELEVATION
½" = 1'-0"

* Adjust spacing to clear pipe assembly

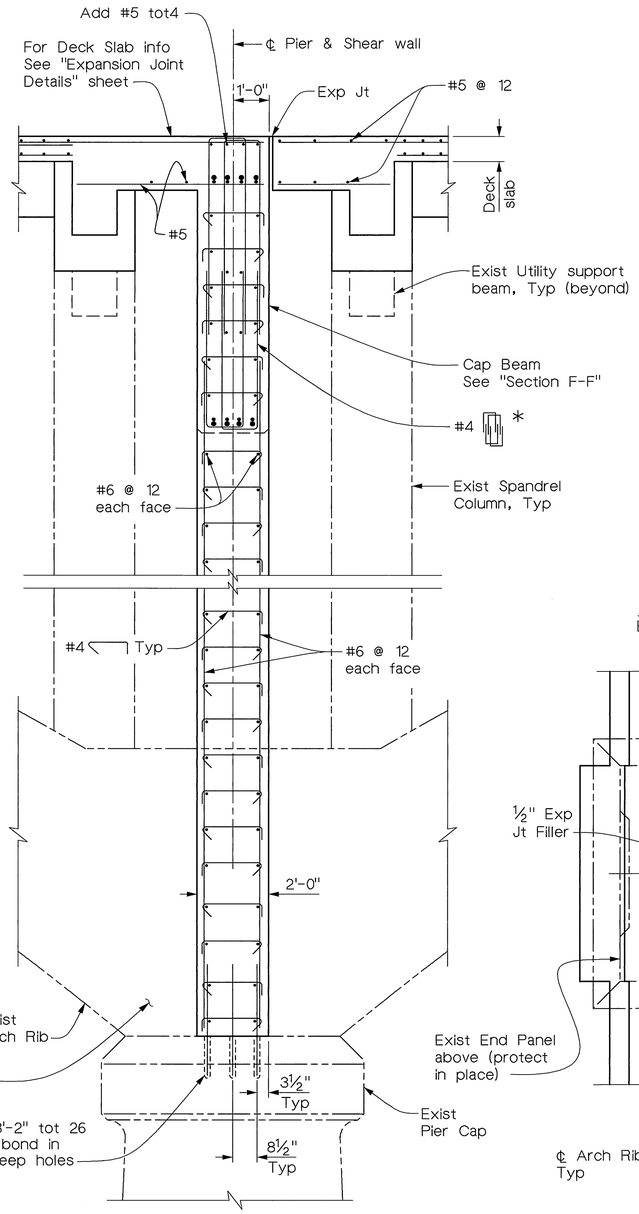

SECTION A-A
½" = 1'-0"

Notes:

1. For Sections B-B, C-C, D-D, E-E, F-F and "Detail 1" see "Shear Wall Details 4" sheet.
2. Details of Arch Rib retrofit not shown for clarity.

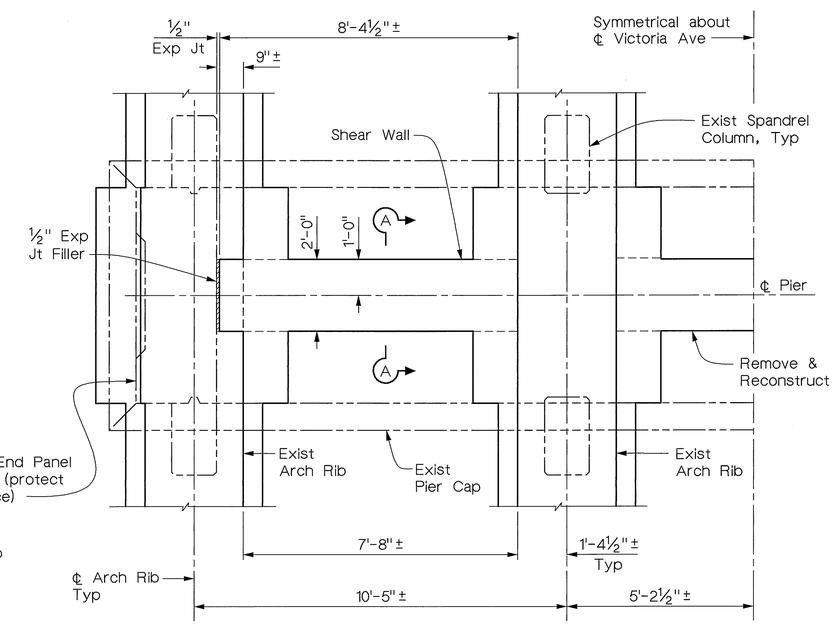

PART PLAN - PIERS 15 & 24
½" = 1'-0"
(Deck slab not shown)

Note:
The Contractor shall verify all controlling field dimensions before ordering or fabricating any material.

MIKE KATUSIAN
DESIGN OVERSIGHT
12/20/02
SIGN OFF DATE

	BY	CHECKED
DESIGN	M. CHAR	T.W. DUDLEY
DETAILS	R. ANDRASEK	T.W. DUDLEY
QUANTITIES	N. MORCILLO	Y. KIM

CITY OF RIVERSIDE

G.J. NASCIMENTO
PROJECT ENGINEER

BRIDGE NO. 56C-55
POST MILE

VICTORIA AVENUE BRIDGE
SEISMIC RETROFIT
SHEAR WALL DETAILS 3

ORIGINAL SCALE IN INCHES FOR REDUCED PLANS 0 1 2 3

CU
EA

DISREGARD PRINTS BEARING EARLIER REVISION DATES →

REVISION DATES (PRELIMINARY STAGE ONLY)

SHEET 32 OF 62

INDEXED 12-6-04 LH

DIST	COUNTY	ROUTE	POST MILES TOTAL PROJECT	SHEET NO.	TOTAL SHEETS
8	Riv	LOC			

REGISTERED CIVIL ENGINEER

12/20/02
PLANS APPROVAL DATE

PROFESSIONAL ENGINEER REGISTERED T.W. DUDLEY No. 39514 Exp. 12/31/05 CIVIL STATE OF CALIFORNIA

CITY OF RIVERSIDE
DEPARTMENT OF PUBLIC WORKS
3900 Main Street
Riverside, California 92522

LIM & NASCIMENTO ENGINEERING
12 Mauchly, Bldg L
Irvine, California 92618

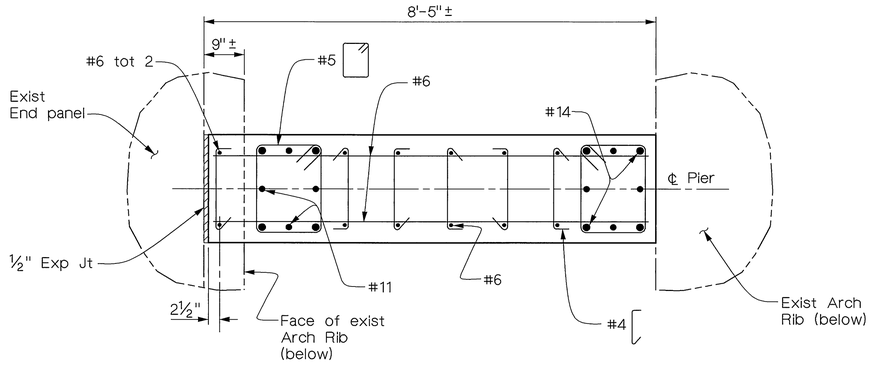

SECTION B-B
¾" = 1'-0"

For information not shown See "Section C-C"

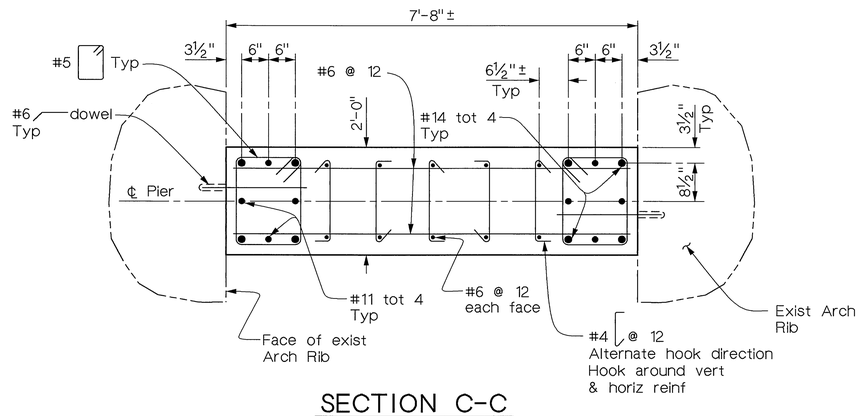

SECTION C-C
¾" = 1'-0"

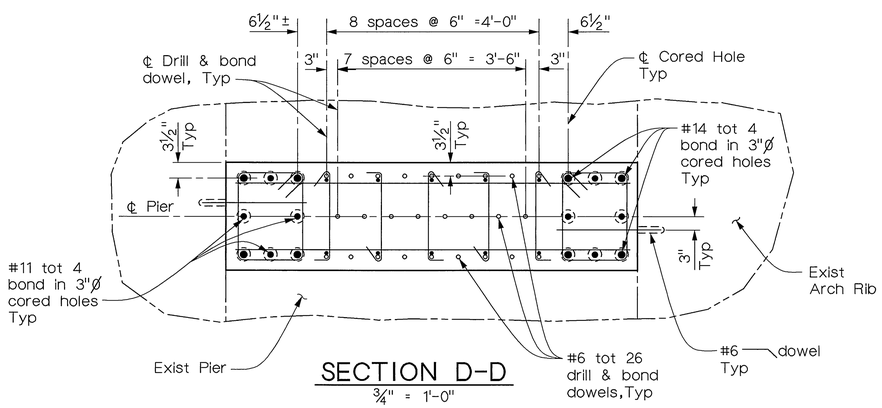

SECTION D-D
¾" = 1'-0"

Note:
For information not shown see "Section C-C"

Note:
The Contractor shall verify all controlling field dimensions before ordering or fabricating any material.

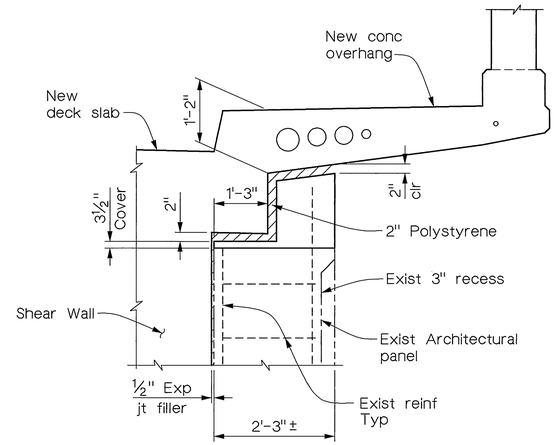

DETAIL 1
¾" = 1'-0"

Notes:

1. For reinforcing, see "Section A-A" on "Shear Wall Details 3" sheet.

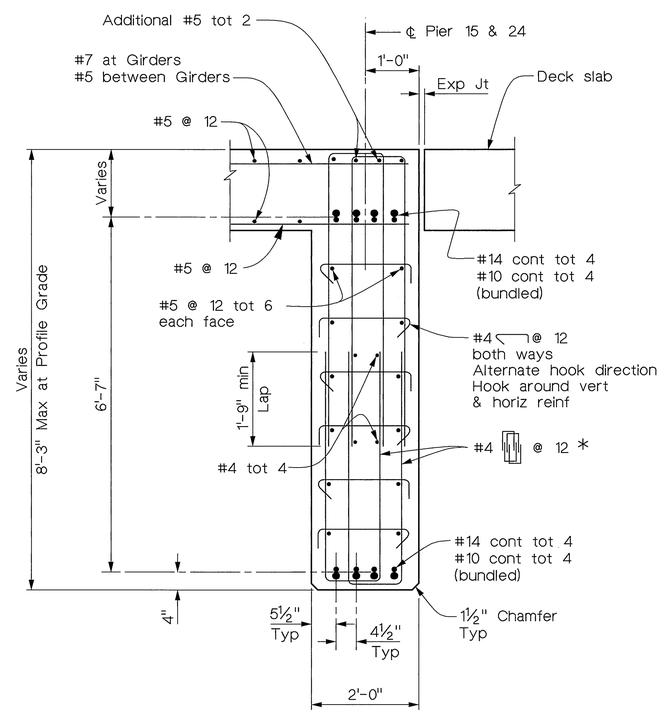

SECTION E-E
¾" = 1'-0"

* Adjust spacing to clear pipe assembly

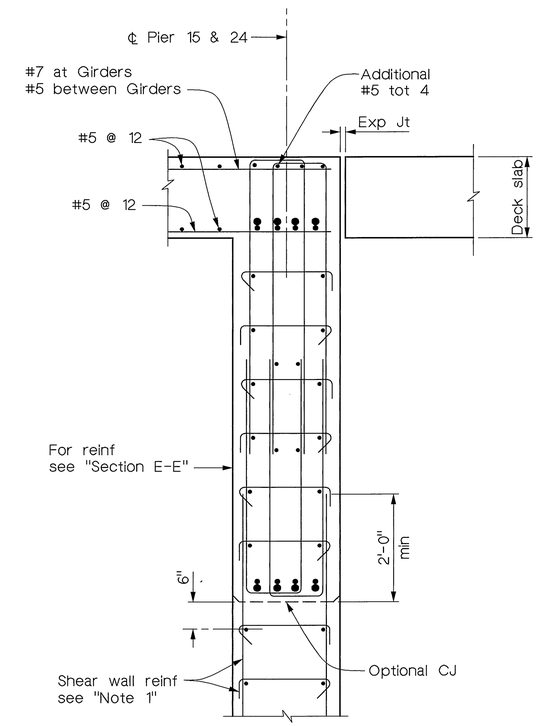

SECTION F-F
¾" = 1'-0"

MIKE KATUSIAN DESIGN OVERSIGHT 12/20/02 SIGN OFF DATE		DESIGN	BY M. CHAR	CHECKED T.W. DUDLEY	CITY OF RIVERSIDE
		DETAILS	BY R. ANDRASEK	CHECKED T.W. DUDLEY	
		QUANTITIES	BY N. MORCILLO	CHECKED Y. KIM	

G.J. NASCIMENTO
PROJECT ENGINEER

BRIDGE NO. 56C-55
POST MILE

VICTORIA AVENUE BRIDGE
SEISMIC RETROFIT
SHEAR WALL DETAILS 4

ORIGINAL SCALE IN INCHES FOR REDUCED PLANS 0 1 2 3

CU
EA

DISREGARD PRINTS BEARING EARLIER REVISION DATES →

REVISION DATES (PRELIMINARY STAGE ONLY)

SHEET 33 OF 62

INDEXED 12-6-04 GH

DIST	COUNTY	ROUTE	POST MILES TOTAL PROJECT	SHEET NO.	TOTAL SHEETS
8	Riv	LOC			

REGISTERED CIVIL ENGINEER

12/20/02
PLANS APPROVAL DATE

REGISTERED PROFESSIONAL ENGINEER T.W. DUDLEY No. 39514 Exp. 12/31/05 CIVIL STATE OF CALIFORNIA

CITY OF RIVERSIDE
DEPARTMENT OF PUBLIC WORKS
3900 Main Street
Riverside, California 92522

LIM & NASCIMENTO ENGINEERING
12 Mauchly, Bldg L
Irvine, California 92618

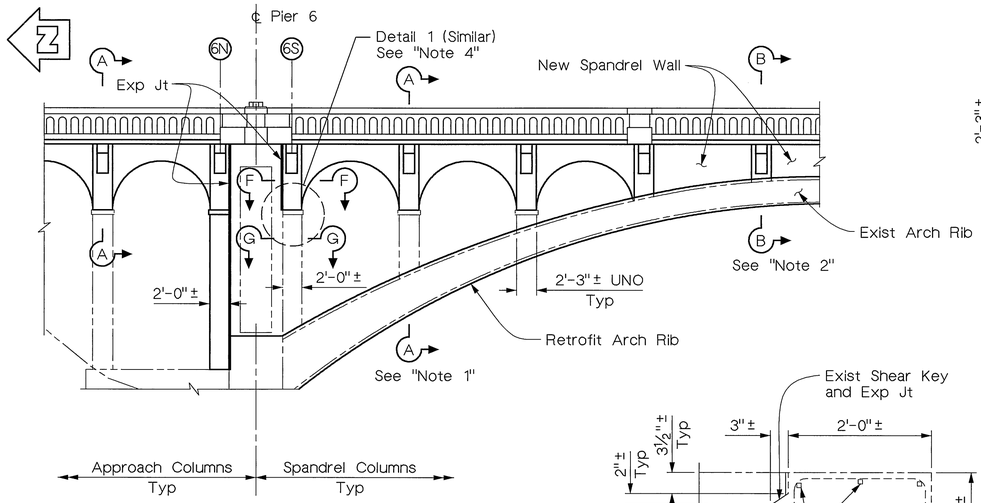

ELEVATION
1/8" = 1'-0"

Note:
Typical Span shown
(Bent 4 to Bent 11)
other Bents similar

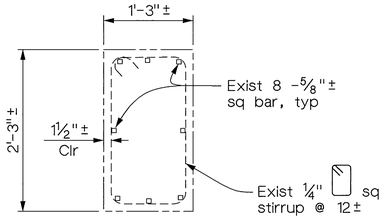

SECTION C-C
1" = 1'-0"

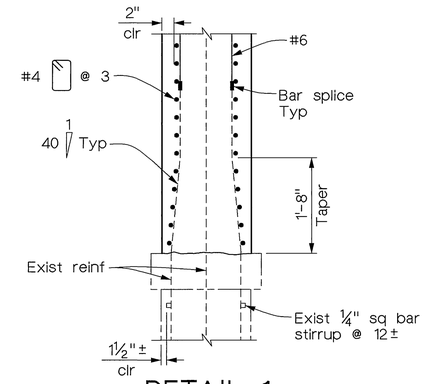

DETAIL 1
1" = 1'-0"

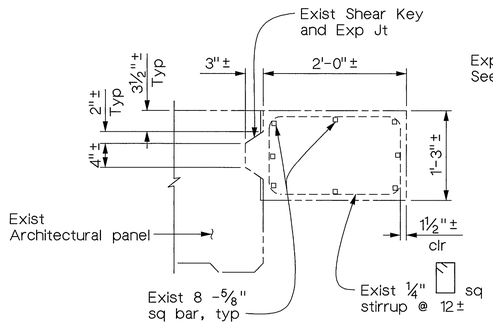

SECTION G-G
1" = 1'-0"

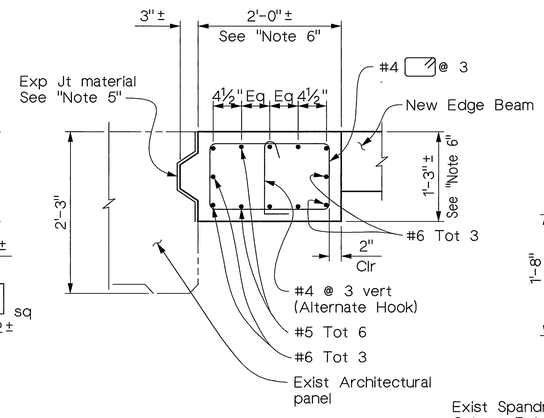

SECTION F-F
1" = 1'-0"

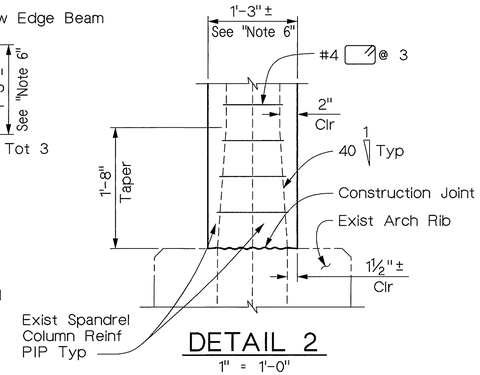

DETAIL 2
1" = 1'-0"

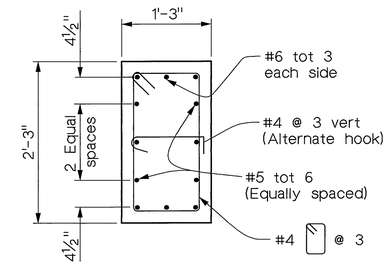

SECTION E-E
1" = 1'-0"

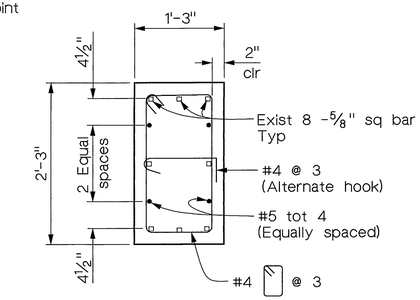

SECTION D-D
1" = 1'-0"

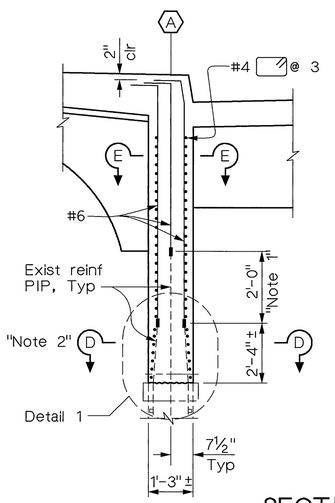

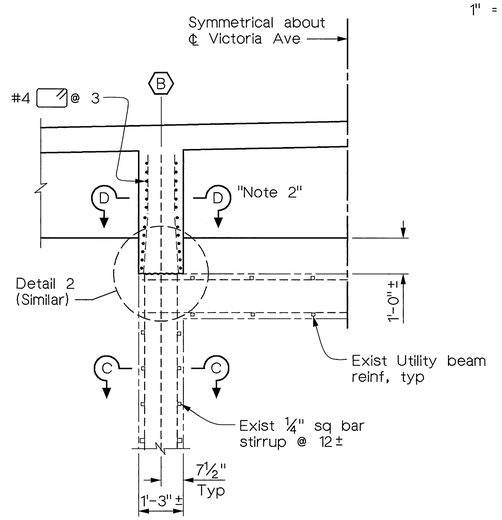

SECTION A-A
½" = 1'-0"

Note:
The Contractor shall verify all controlling field dimensions before ordering or fabricating any material.

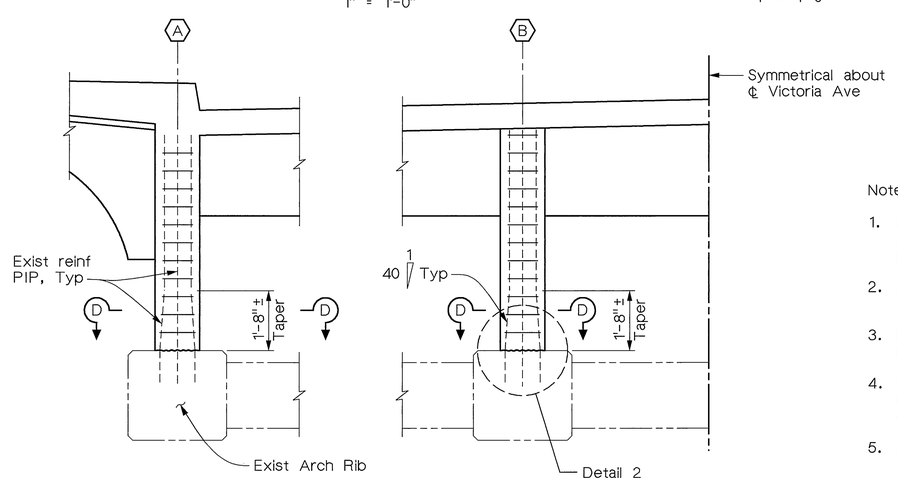

SECTION B-B
½" = 1'-0"

Notes:

1. Section A-A applies to reconstruction of both Spandrel & Approach Columns to be constructed on top of protected portion of existing columns.
2. Section B-B applies to construction of Spandrel Columns to be constructed on top of existing the Arch Rib.
3. For reconstruction of Column at the Bent 6N & 33S, refer to "Shear Wall Details" sheet".
4. Section F-F applies to reconstruction of Exterior Spandrel Columns to be constructed beside of existing Architectural Panel excluding Bent 6N & 33S.
5. Select thickness of expansion joint material to match with thickness of exist expansion joint. Existing dimensions shown are approximate.
6. Match existing As-Built dimensions.

MIKE KATUSIAN
DESIGN OVERSIGHT
12/20/02
SIGN/OFF DATE

	BY	CHECKED
DESIGN	M. CHAR	T.W. DUDLEY
DETAILS	N. MORCILLO	T.W. DUDLEY
QUANTITIES	N. MORCILLO	Y. KIM

CITY OF RIVERSIDE

G.J. NASCIMENTO
PROJECT ENGINEER

BRIDGE NO. 56C-55
POST MILE

VICTORIA AVENUE BRIDGE
SEISMIC RETROFIT
SPANDREL COLUMN DETAILS

ORIGINAL SCALE IN INCHES FOR REDUCED PLANS 0 1 2 3

CU
EA

DISREGARD PRINTS BEARING EARLIER REVISION DATES →

REVISION DATES (PRELIMINARY STAGE ONLY)

SHEET 34 OF 62

INDEXED 12-6-04 LFH

DIST	COUNTY	ROUTE	POST MILES TOTAL PROJECT	SHEET NO.	TOTAL SHEETS
8	Riv	LOC			

REGISTERED CIVIL ENGINEER

12/20/02
PLANS APPROVAL DATE

REGISTERED PROFESSIONAL ENGINEER T.W. DUDLEY No. 39514 Exp. 12/31/05 CIVIL STATE OF CALIFORNIA

CITY OF RIVERSIDE
DEPARTMENT OF PUBLIC WORKS
3900 Main Street
Riverside, California 92522

LIM & NASCIMENTO ENGINEERING
12 Mauchly, Bldg L
Irvine, California 92618

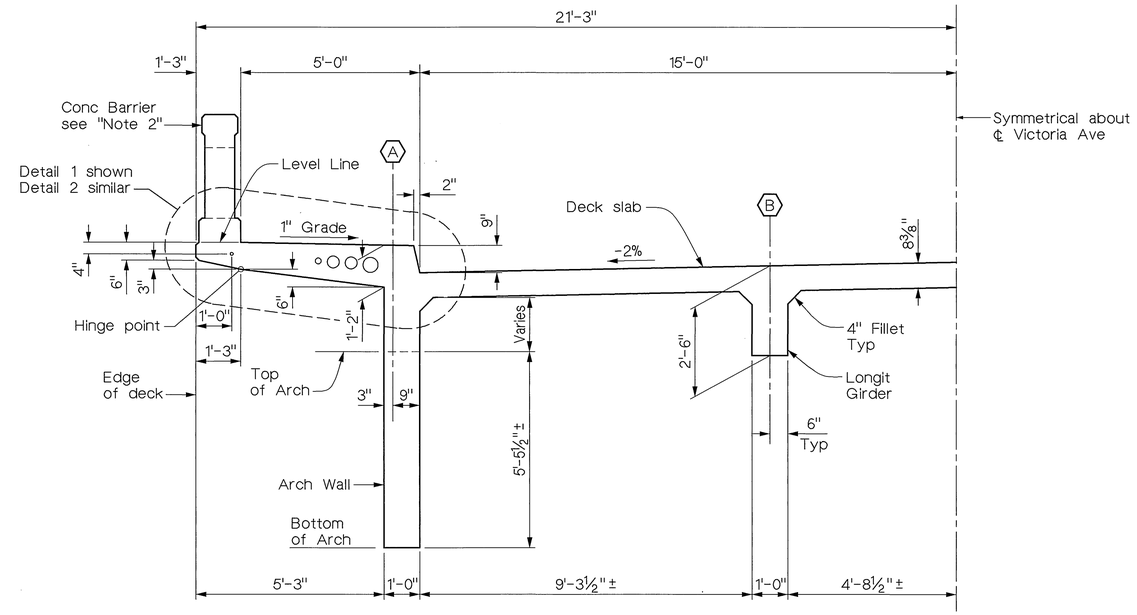

TYPICAL SECTION
1/2" = 1'-0"

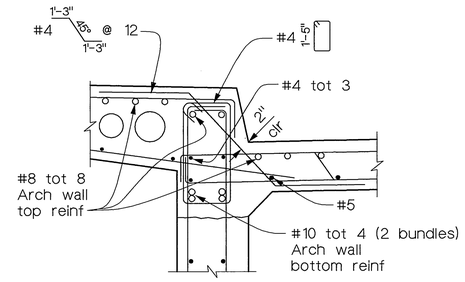

DETAIL 3
1" = 1'-0"

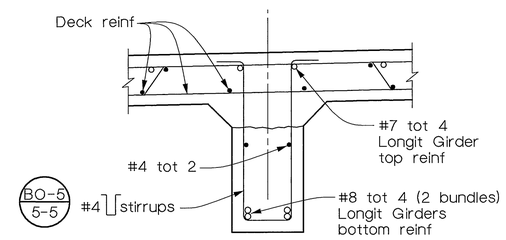

DETAIL 4
1" = 1'-0"

Notes:

1. For Arch Wall reinforcement, see "Girder Reinforcement Details 2" sheet.
2. For reinforcing bar installation, see "Barrier Railing Details 2" sheet.
3. For conduit installation details, see "Electrical Plans".

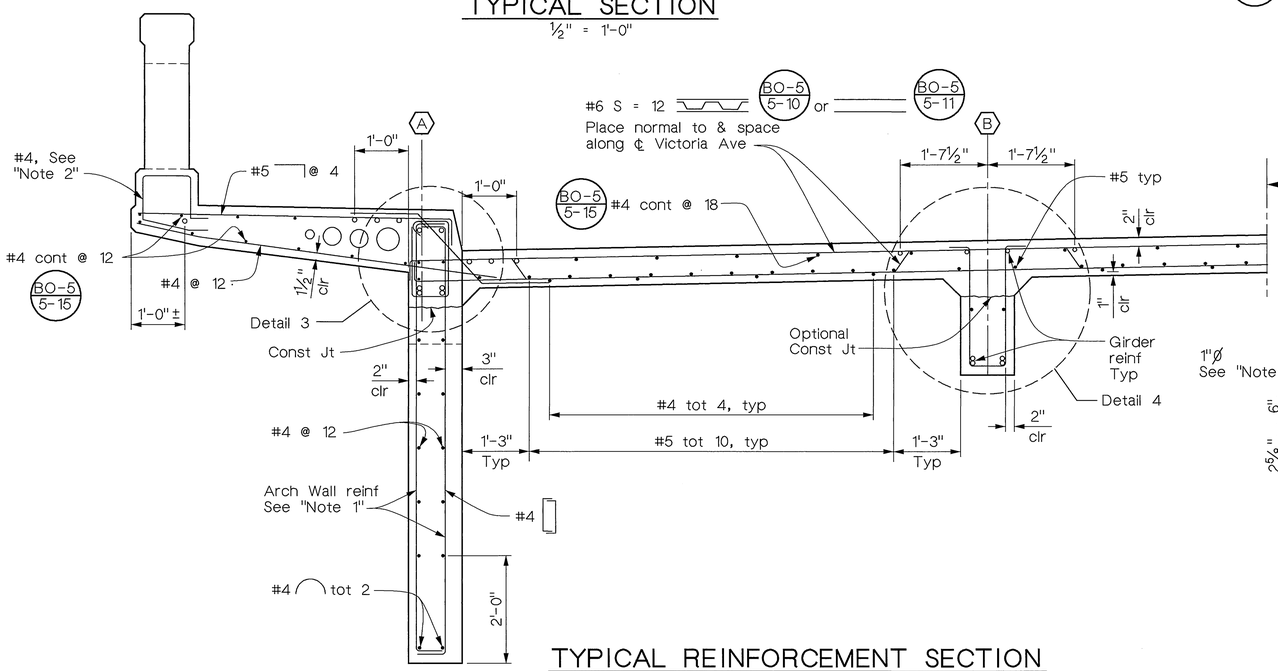

TYPICAL REINFORCEMENT SECTION
3/4" = 1'-0"

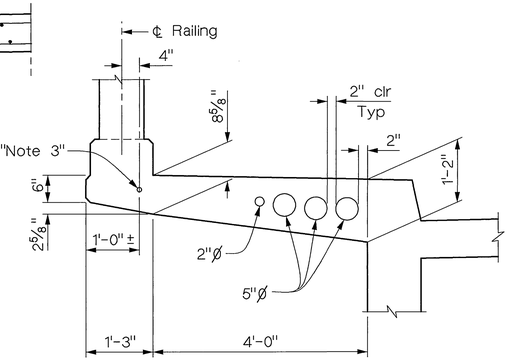

WEST SIDE

DETAIL 1
3/4" = 1'-0"

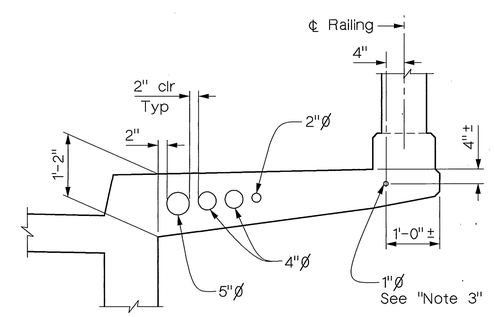

EAST SIDE

DETAIL 2
3/4" = 1'-0"

For information not shown See "Detail 1"

Note:
The Contractor shall verify all controlling field dimensions before ordering or fabricating any material.

MIKE KATUSIAN
DESIGN OVERSIGHT
12/20/02
SIGN OFF DATE

	BY	CHECKED
DESIGN	M. CHAR	T.W. DUDLEY
DETAILS	R. ANDRASEK	T.W. DUDLEY
QUANTITIES	N. MORCILLO	Y. KIM

CITY OF RIVERSIDE

G.J. NASCIMENTO
PROJECT ENGINEER

BRIDGE NO. 56C-55
POST MILE

VICTORIA AVENUE BRIDGE
SEISMIC RETROFIT
TYPICAL SECTION

ORIGINAL SCALE IN INCHES FOR REDUCED PLANS 0 1 2 3

CU
EA

DISREGARD PRINTS BEARING EARLIER REVISION DATES →

REVISION DATES (PRELIMINARY STAGE ONLY)

SHEET 35 OF 62

INDEXED 12-6-04 LFH

DIST	COUNTY	ROUTE	POST MILES TOTAL PROJECT	SHEET NO.	TOTAL SHEETS
8	Riv	LOC			

REGISTERED CIVIL ENGINEER

12/20/02
PLANS APPROVAL DATE

REGISTERED PROFESSIONAL ENGINEER
T.W. DUDLEY
No. 39514
Exp. 12/31/05
CIVIL
STATE OF CALIFORNIA

CITY OF RIVERSIDE
DEPARTMENT OF PUBLIC WORKS
3900 Main Street
Riverside, California 92522

LIM & NASCIMENTO ENGINEERING
12 Mauchly, Bldg L
Irvine, California 92618

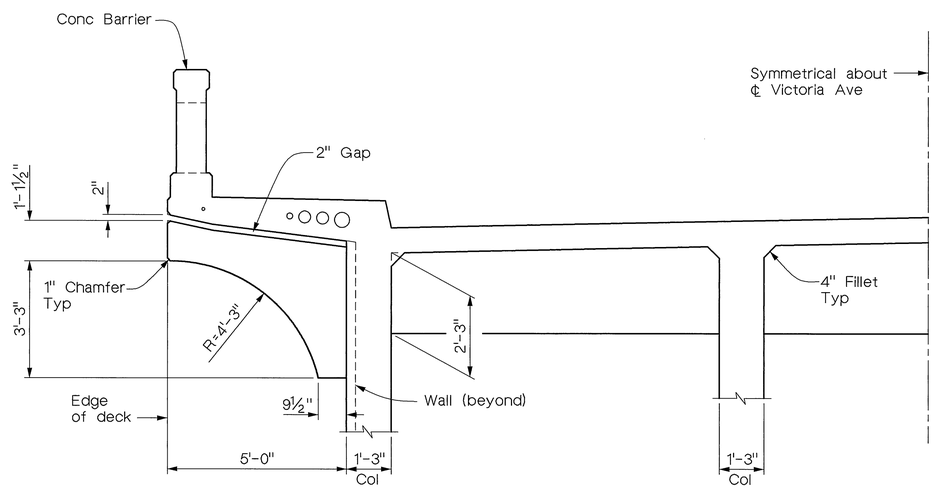

CAP BEAM SECTION
½" = 1'-0"

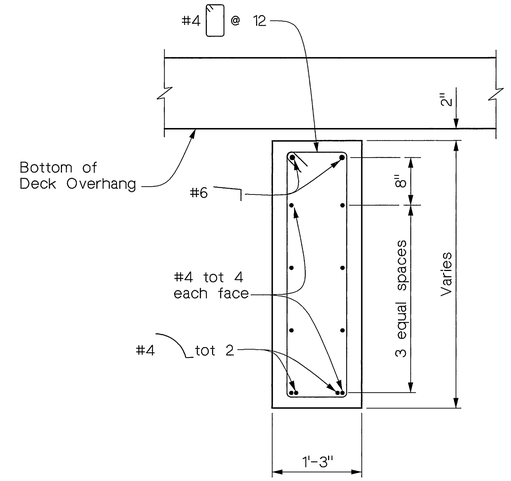

SECTION A-A
1" = 1'-0"

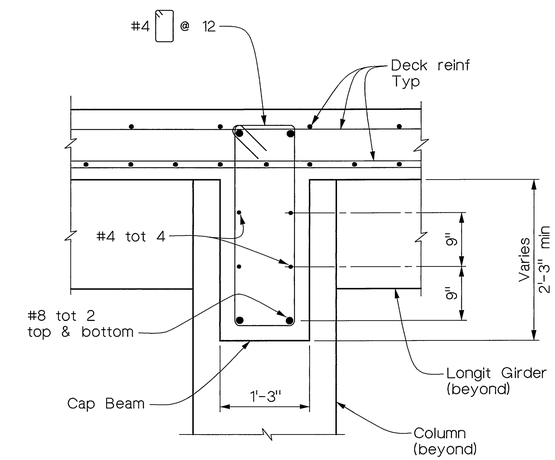

SECTION B-B
1" = 1'-0"

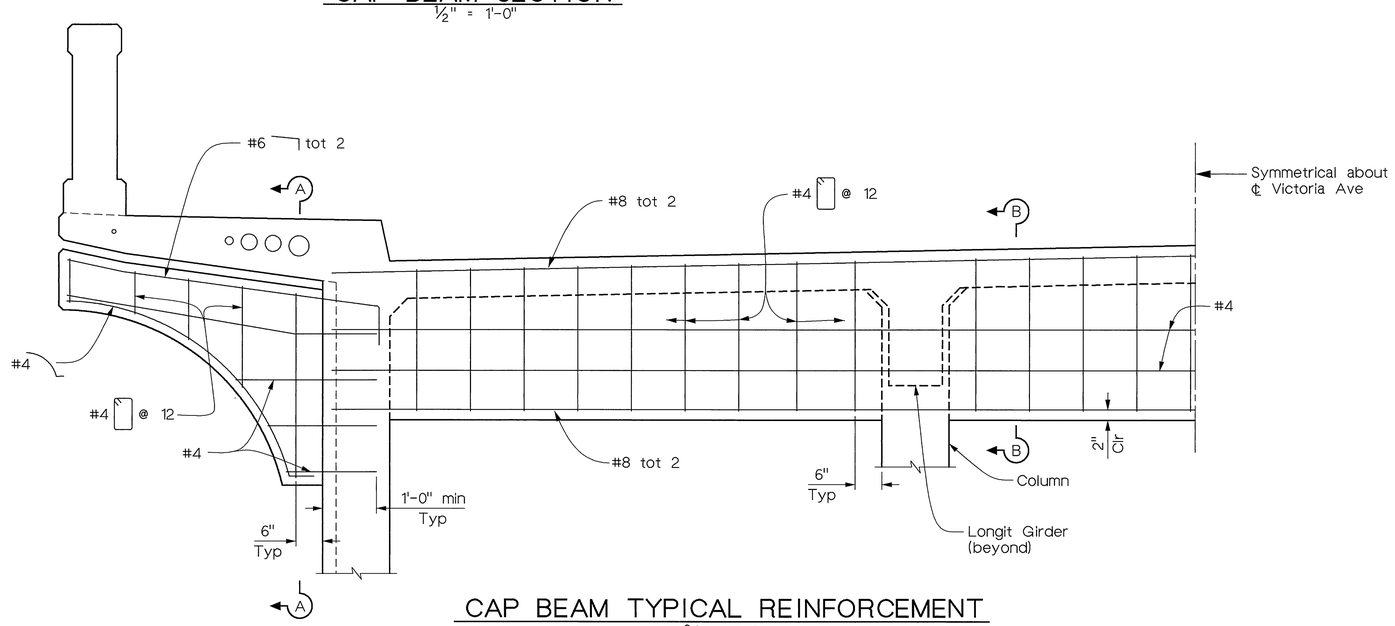

CAP BEAM TYPICAL REINFORCEMENT
¾" = 1'-0"

Notes

1. For reinforcement not shown see "Girder Details 2" sheet

Note:
The Contractor shall verify all controlling field dimensions before ordering or fabricating any material.

MIKE KATUSIAN
DESIGN OVERSIGHT
12/20/02
SIGN OFF DATE

	BY	CHECKED
DESIGN	M. CHAR	T.W. DUDLEY
DETAILS	N. MORCILLO	T.W. DUDLEY
QUANTITIES	N. MORCILLO	Y. KIM

CITY OF RIVERSIDE

G.J. NASCIMENTO
PROJECT ENGINEER

BRIDGE NO. 56C-55
POST MILE

VICTORIA AVENUE BRIDGE
SEISMIC RETROFIT
CAP BEAM DETAILS

ORIGINAL SCALE IN INCHES FOR REDUCED PLANS 0 1 2 3

CU
EA

DISREGARD PRINTS BEARING EARLIER REVISION DATES →

REVISION DATES (PRELIMINARY STAGE ONLY)

SHEET 36 OF 62

INDEXED 12-6-04 LPH

DIST	COUNTY	ROUTE	POST MILES TOTAL PROJECT	SHEET NO.	TOTAL SHEETS
8	Riv	LOC			

REGISTERED CIVIL ENGINEER

12/20/02
PLANS APPROVAL DATE

REGISTERED PROFESSIONAL ENGINEER T.W. DUDLEY No. 39514 Exp. 12/31/05 CIVIL STATE OF CALIFORNIA

CITY OF RIVERSIDE
DEPARTMENT OF PUBLIC WORKS
3900 Main Street
Riverside, California 92522

LIM & NASCIMENTO ENGINEERING
12 Mauchly, Bldg L
Irvine, California 92618

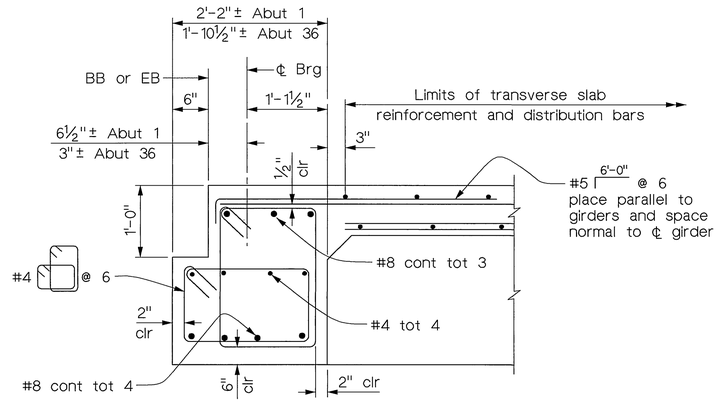

For reinf not shown, see "Girder Reinforcement Details" sheets

SECTION A-A
1" = 1'-0"

Notes:

1. Girder layouts for Arch spans between Pier 15 & Pier 24 and between Pier 24 & Pier 33 similar to layout shown for arch spans between Pier 6 & Pier 15.
2. Deck slab supports at (A) & (D) are comprised of Arch Walls, UNO. See "Girder Reinforcement" sheet for details.
3. Deck slab supports at (B) & (C) are comprised of longitudinal girders, UNO. See "Girder Reinforcement" sheet for details.
4. For "View B-B, "View C-C", "View D-D", and "View E-E.", see "Girder Reinforcement Details 2" sheet.
5. Camber is not required to counteract long term deflections of longitudinal girders. The contractor shall provide any camber needed to accomodate falsework settlements.

LEGEND

- [12] Girder stem width
- Spandrel Wall
- Transverse Shear Wall See "Shear Wall Details 3" sheet

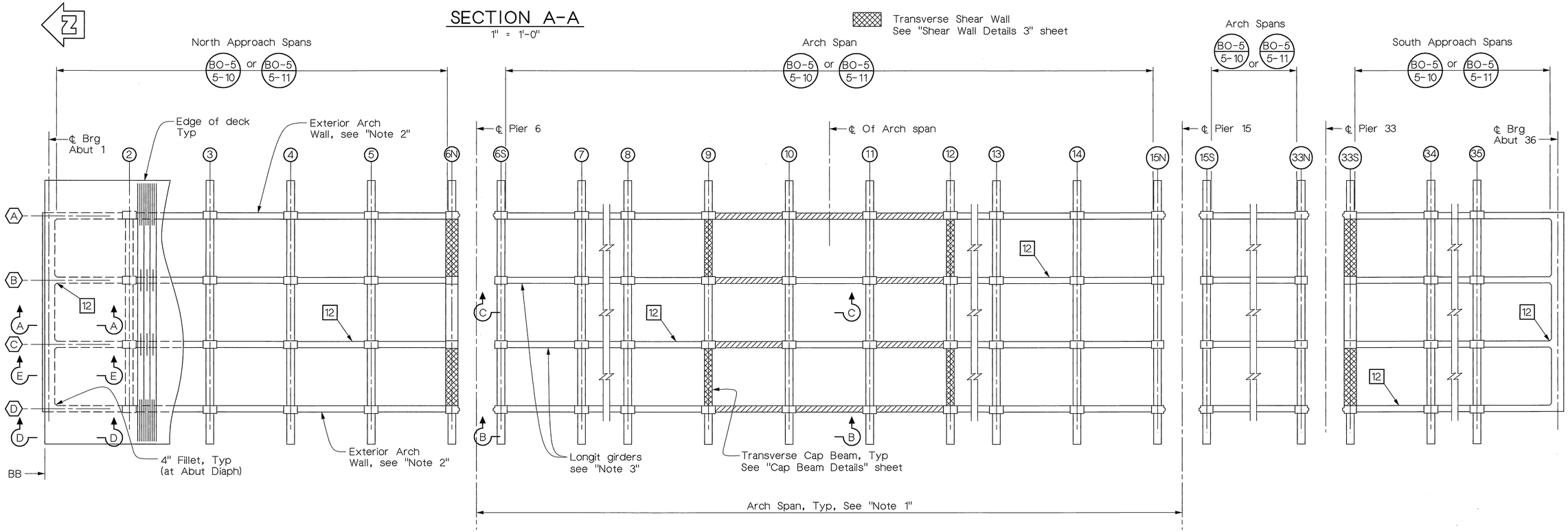

GIRDER LAYOUT
⅛" = 1'-0"

Note:
The Contractor shall verify all controlling field dimensions before ordering or fabricating any material.

MIKE KATUSIAN DESIGN OVERSIGHT 12/20/02 SIGN OFF DATE	DESIGN	BY M. CHAR	CHECKED T.W. DUDLEY	CITY OF RIVERSIDE	G.J. NASCIMENTO PROJECT ENGINEER
	DETAILS	BY R. ANDRASEK	CHECKED T.W. DUDLEY		
	QUANTITIES	BY N. MORCILLO	CHECKED Y. KIM		

ORIGINAL SCALE IN INCHES FOR REDUCED PLANS 0 1 2 3

CU
EA

BRIDGE NO. 56C-55
POST MILE

VICTORIA AVENUE BRIDGE
SEISMIC RETROFIT
GIRDER LAYOUT

DISREGARD PRINTS BEARING EARLIER REVISION DATES →
REVISION DATES (PRELIMINARY STAGE ONLY)

SHEET 37 OF 62

INDEXED 12-6-04 4H

DIST	COUNTY	ROUTE	POST MILES TOTAL PROJECT	SHEET NO.	TOTAL SHEETS
8	Riv	LOC			

REGISTERED CIVIL ENGINEER

12/20/02
PLANS APPROVAL DATE

REGISTERED PROFESSIONAL ENGINEER T.W. DUDLEY No. 39514 Exp. 12/31/05 CIVIL STATE OF CALIFORNIA

CITY OF RIVERSIDE
DEPARTMENT OF PUBLIC WORKS
3900 Main Street
Riverside, California 92522

LIM & NASCIMENTO ENGINEERING
12 Mauchly, Bldg L
Irvine, California 92618

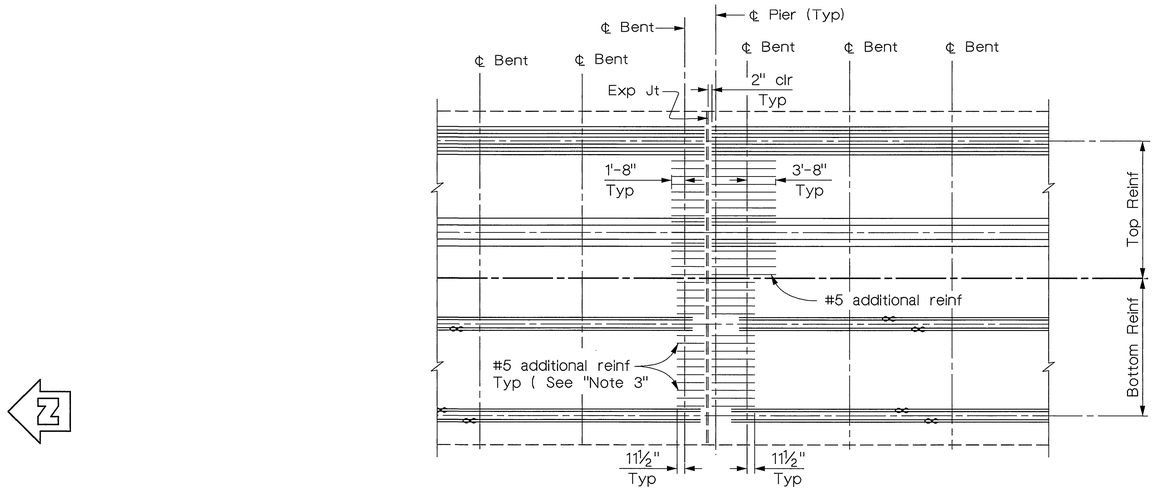

ADDITIONAL REINFORCEMENT PART PLAN

No Scale

Notes:

1. For "Sections, B-B & C-C", see "Expansion Joint Details 2" sheet.
2. For cross sections of Arch Walls & Girders, see "Typical Section" sheet.
3. For reinforcement information not shown on "Additional Reinforcement Part Plan" see "Expansion Joint Details 2" sheet

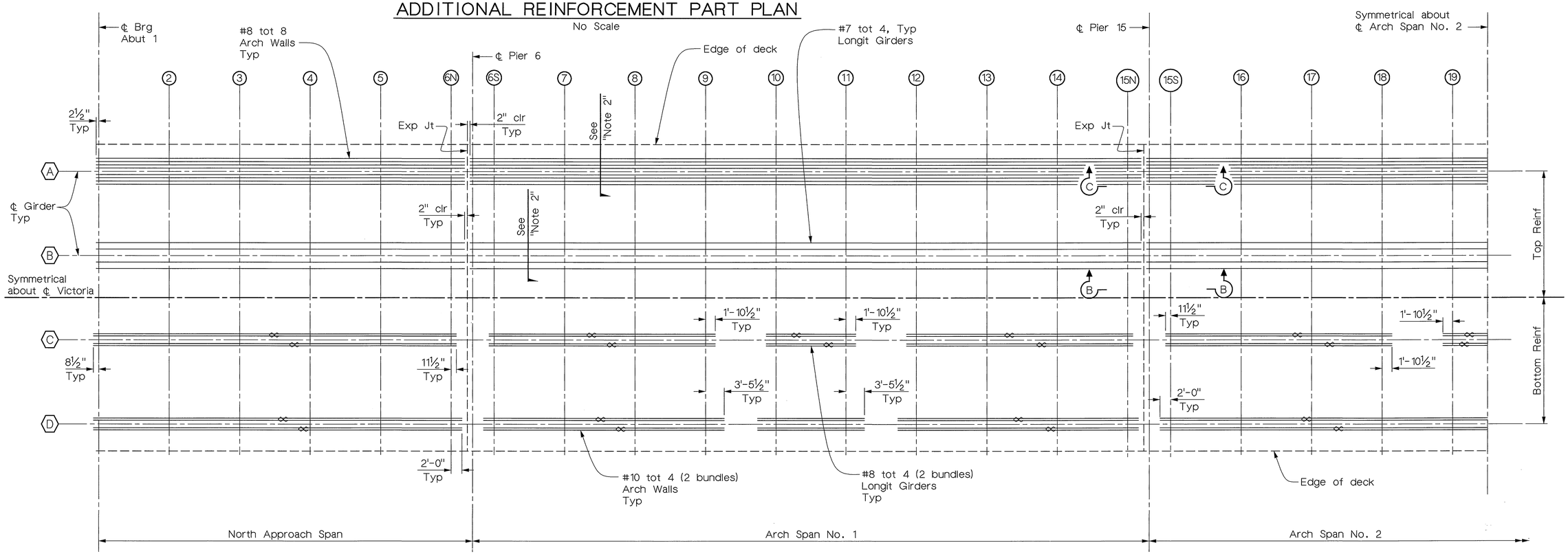

GIRDER REINFORCEMENT PART PLAN

No Scale

Note:
The Contractor shall verify all controlling field dimensions before ordering or fabricating any material.

MIKE KATUSIAN
DESIGN OVERSIGHT
12/20/02
SIGN OFF DATE

	BY	CHECKED
DESIGN	M. CHAR	T.W. DUDLEY
DETAILS	R. ANDRASEK	T.W. DUDLEY
QUANTITIES	N. MORCILLO	Y. KIM

ORIGINAL SCALE IN INCHES FOR REDUCED PLANS 0 1 2 3

CITY OF RIVERSIDE

G.J. NASCIMENTO
PROJECT ENGINEER

CU
EA

BRIDGE NO. 56C-55
POST MILE

VICTORIA AVENUE BRIDGE
SEISMIC RETROFIT
GIRDER REINFORCEMENT DETAILS 1

DISREGARD PRINTS BEARING EARLIER REVISION DATES →
REVISION DATES (PRELIMINARY STAGE ONLY)

SHEET 38 OF 62

INDEXED 12-6-09 LFH

DIST	COUNTY	ROUTE	POST MILES TOTAL PROJECT	SHEET NO.	TOTAL SHEETS
8	Riv	LOC			

REGISTERED CIVIL ENGINEER

12/20/02
PLANS APPROVAL DATE

REGISTERED PROFESSIONAL ENGINEER T.W. DUDLEY No. 39514 Exp. 12/31/05 CIVIL STATE OF CALIFORNIA

CITY OF RIVERSIDE
DEPARTMENT OF PUBLIC WORKS
3900 Main Street
Riverside, California 92522

LIM & NASCIMENTO ENGINEERING
12 Mauchly, Bldg L
Irvine, California 92618

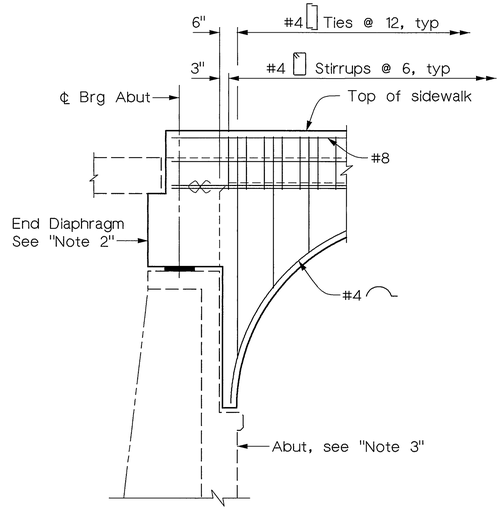

VIEW D-D

½" = 1'-0"

For information not shown See "View B-B"

Abutment 1 shown, Abutment 36 similar

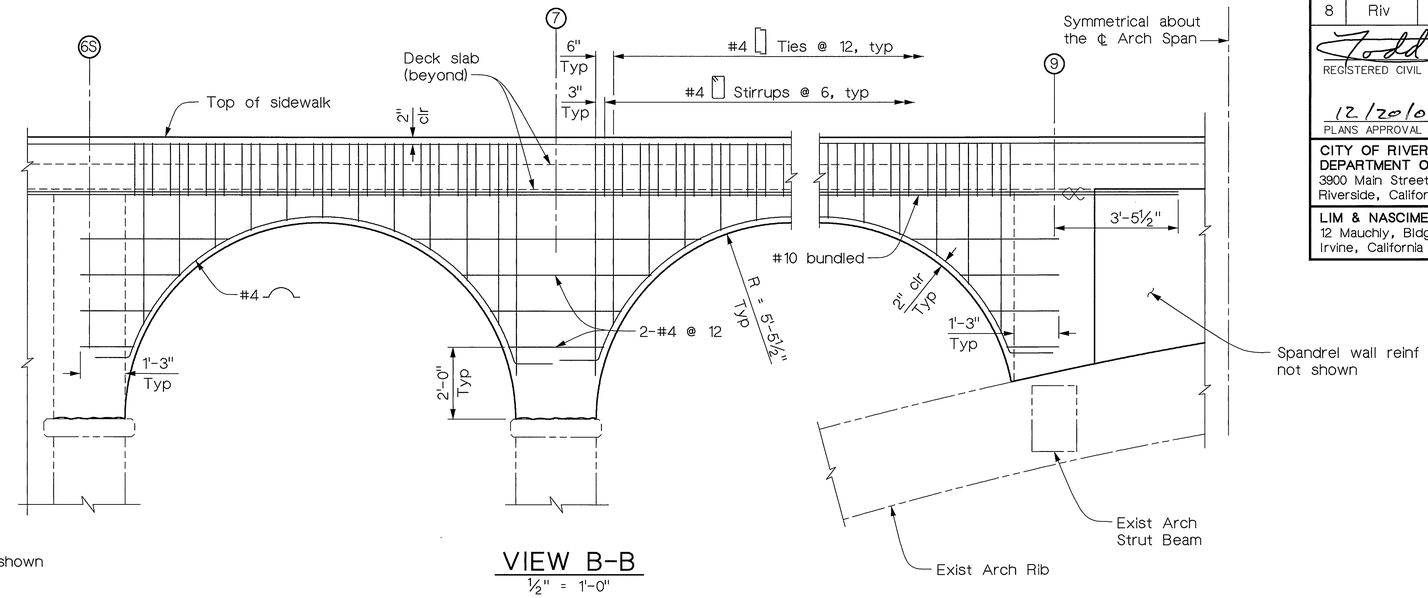

VIEW B-B

½" = 1'-0"

(Arch Wall Reinforcement)

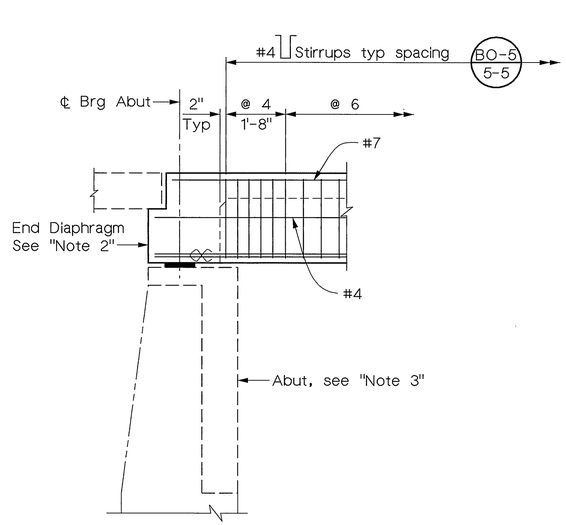

VIEW E-E

½" = 1'-0"

For information not shown See "View C-C"

Abutment 1 shown, Abutment 36 similar

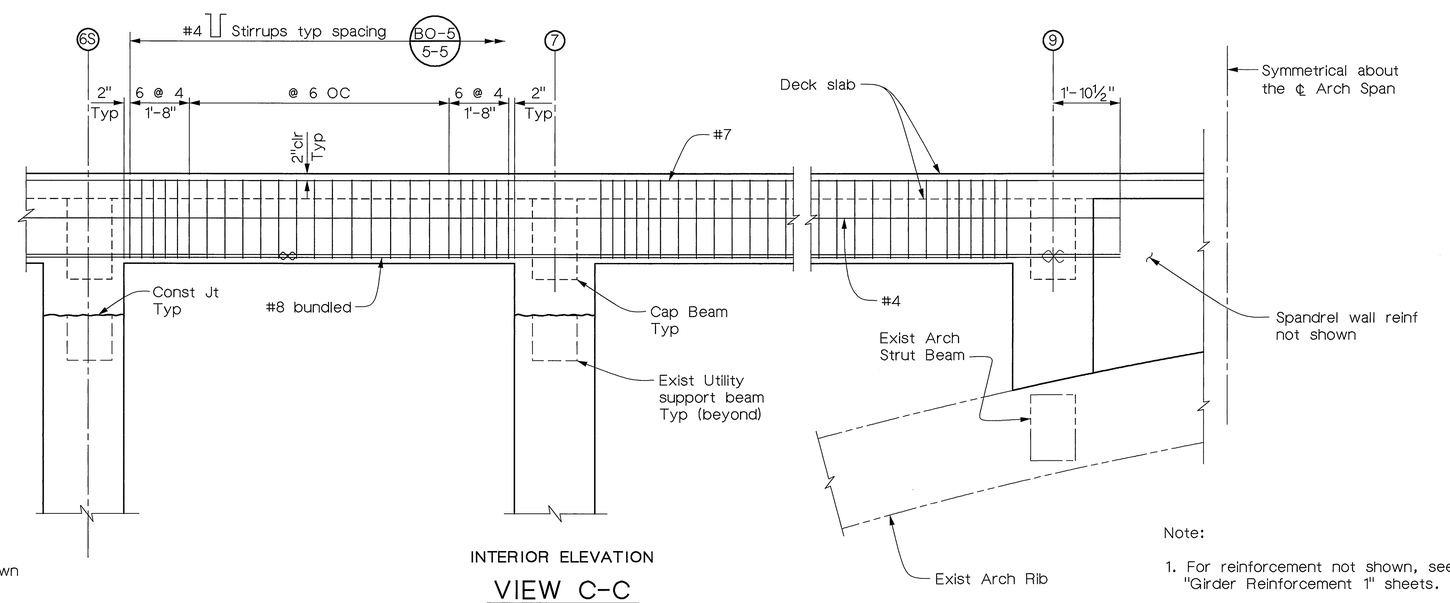

INTERIOR ELEVATION

VIEW C-C

½" = 1'-0"

(Longitudinal Beam Reinforcement)

Note:

1. For reinforcement not shown, see "Typical Section" & "Girder Reinforcement 1" sheets.
2. For End Diaphragm reinforcement, see "Girder Layout" sheet.
3. For Abutment reinforcement, see "Abutment Details 1" sheet.

Note:
The Contractor shall verify all controlling field dimensions before ordering or fabricating any material.

MIKE KATUSIAN
DESIGN OVERSIGHT
12/20/02
SIGN OFF DATE

	BY	CHECKED
DESIGN	M. CHAR	T.W. DUDLEY
DETAILS	R. ANDRASEK	T.W. DUDLEY
QUANTITIES	N. MORCILLO	Y. KIM

CITY OF RIVERSIDE

G.J. NASCIMENTO
PROJECT ENGINEER

BRIDGE NO. 56C-55
POST MILE

VICTORIA AVENUE BRIDGE
SEISMIC RETROFIT
GIRDER REINFORCEMENT DETAILS 2

ORIGINAL SCALE IN INCHES FOR REDUCED PLANS 0 1 2 3

CU
EA

DISREGARD PRINTS BEARING EARLIER REVISION DATES →

REVISION DATES (PRELIMINARY STAGE ONLY)

SHEET 39 OF 62

INDEXED 12-6-09 LFH

DIST	COUNTY	ROUTE	POST MILES TOTAL PROJECT	SHEET NO.	TOTAL SHEETS
8	Riv	LOC			

REGISTERED CIVIL ENGINEER

12/20/02
PLANS APPROVAL DATE

REGISTERED PROFESSIONAL ENGINEER T.W. DUDLEY No. 39514 Exp. 12/31/05 CIVIL STATE OF CALIFORNIA

CITY OF RIVERSIDE
DEPARTMENT OF PUBLIC WORKS
3900 Main Street
Riverside, California 92522

LIM & NASCIMENTO ENGINEERING
12 Mauchly, Bldg L
Irvine, California 92618

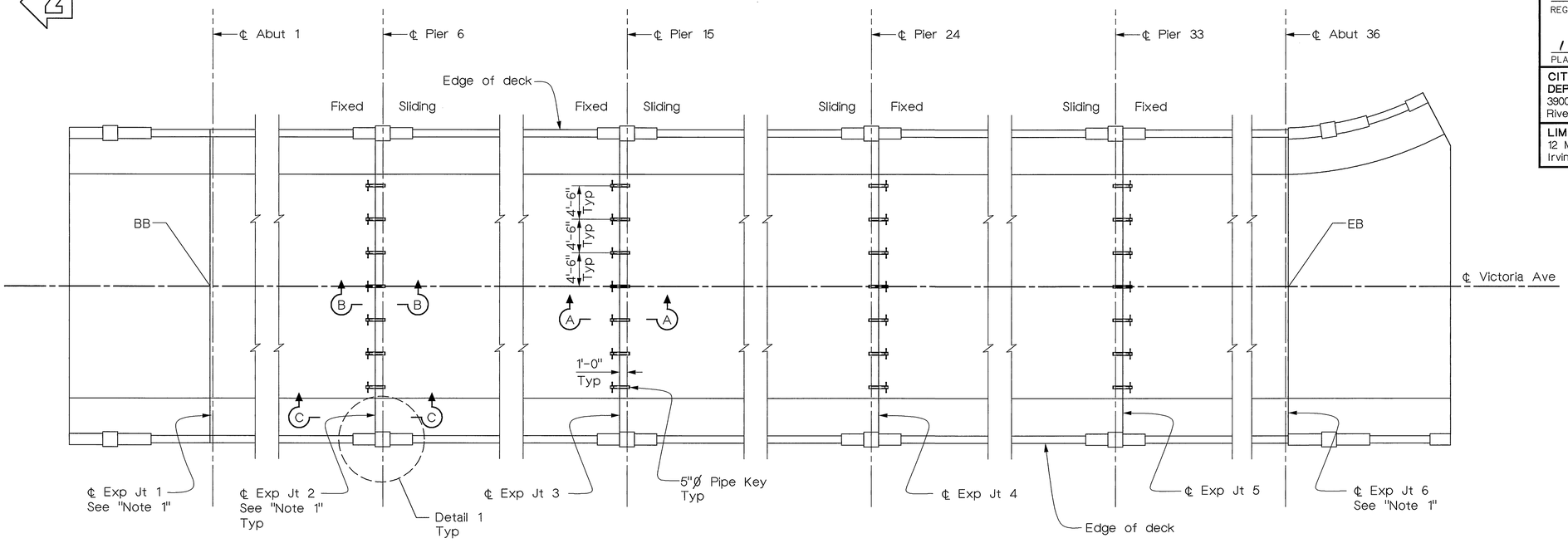

PLAN
1/8" = 1'-0"

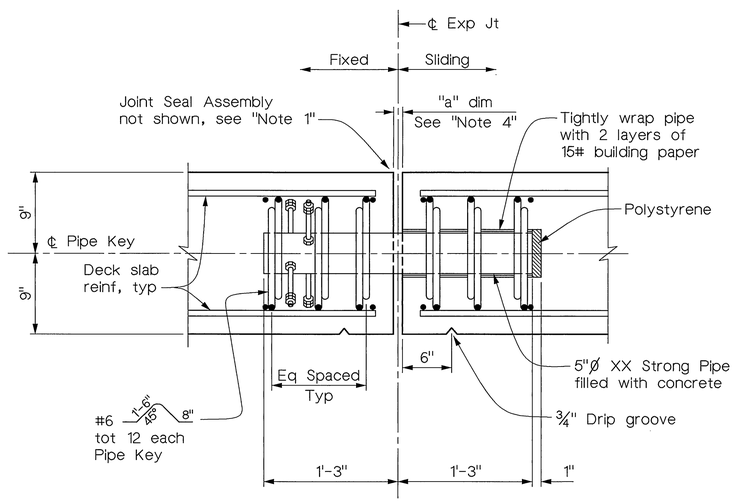

SECTION A-A
1 1/2" = 1'-0"

Note:
Applies to Pier deck
Expansion Joints 2 thru 5

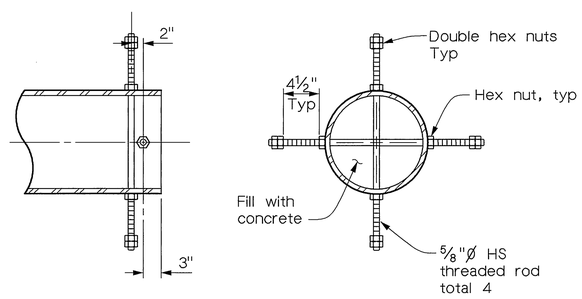

PIPE END DETAIL
No Scale

Notes:

1. For Expansion Joint Seal Assembly, see "Joint Seal Assembly (Max MR=4")" sheet. Typical at all expansion joints.
2. For "Sections B-B & C-C", see "Expansion Joint Details 2" sheet.
3. Place screws with insert assemblies on approaching traffic end.
4. For "a" dimension use values shown for BB/EB on "Joint Seal Assembly (Max MR=4")" sheet.

Note:
The Contractor shall verify all controlling field dimensions before ordering or fabricating any material.

MIKE KATUSIAN
DESIGN OVERSIGHT
12/20/02
SIGN OFF DATE

	BY	CHECKED
DESIGN	M. CHAR	T.W. DUDLEY
DETAILS	R. ANDRASEK	T.W. DUDLEY
QUANTITIES	N. MORCILLO	Y. KIM

CITY OF RIVERSIDE

G.J. NASCIMENTO
PROJECT ENGINEER

BRIDGE NO. 56C-55
POST MILE

VICTORIA AVENUE BRIDGE
SEISMIC RETROFIT
EXPANSION JOINT DETAILS 1

ORIGINAL SCALE IN INCHES FOR REDUCED PLANS 0 1 2 3

CU
EA

DISREGARD PRINTS BEARING EARLIER REVISION DATES →

REVISION DATES (PRELIMINARY STAGE ONLY)

SHEET 40 OF 62

INDEXED 12-6-04 LFH

DIST	COUNTY	ROUTE	POST MILES TOTAL PROJECT	SHEET NO.	TOTAL SHEETS
8	Riv	LOC			

REGISTERED CIVIL ENGINEER

12/20/02
PLANS APPROVAL DATE

REGISTERED PROFESSIONAL ENGINEER T.W. DUDLEY No. 39514 Exp. 12/31/05 CIVIL STATE OF CALIFORNIA

CITY OF RIVERSIDE
DEPARTMENT OF PUBLIC WORKS
3900 Main Street
Riverside, California 92522

LIM & NASCIMENTO ENGINEERING
12 Mauchly, Bldg L
Irvine, California 92618

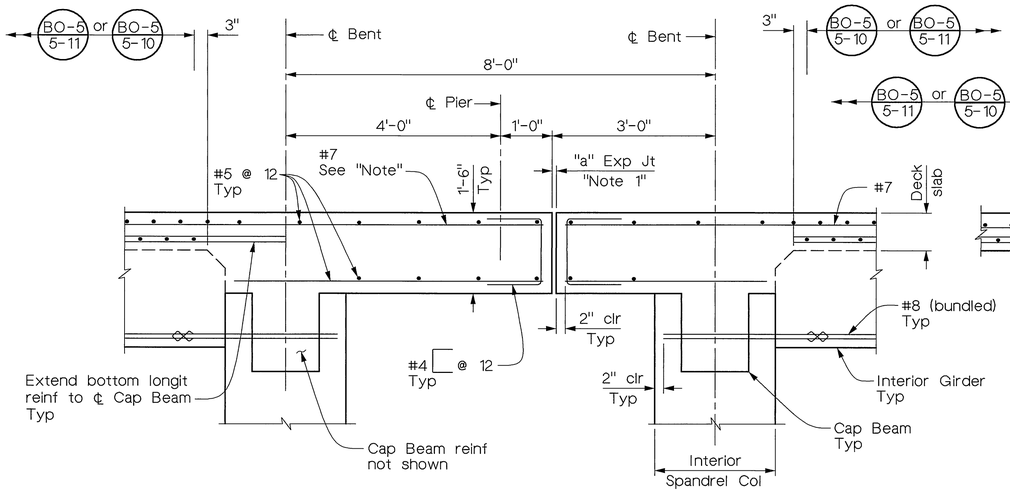

SECTION TAKEN AT INTERIOR GIRDER

Note:
For longitudinal Girder top reinforcement.
See "Girder Reinforcement Details 1" sheet

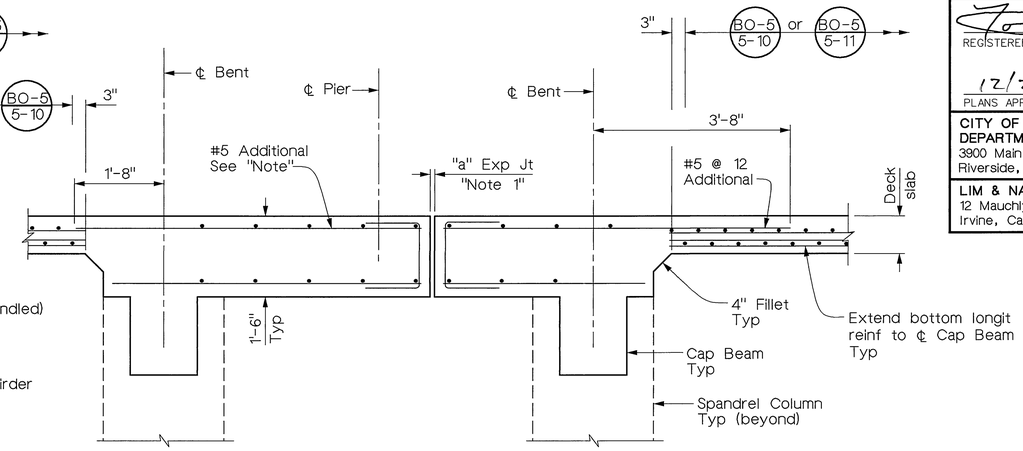

For information not shown
See "Section Taken at Interior Girder"

SECTION TAKEN BETWEEN GIRDERS

Note:
For additional Slab top reinforcement between longitudinal girders.
See "Girder Reinforcement Details 1" sheet

SECTION B-B

3/4" = 1'-0"

Note:
Expansion Joint Assembly not shown.
See "Note 2"

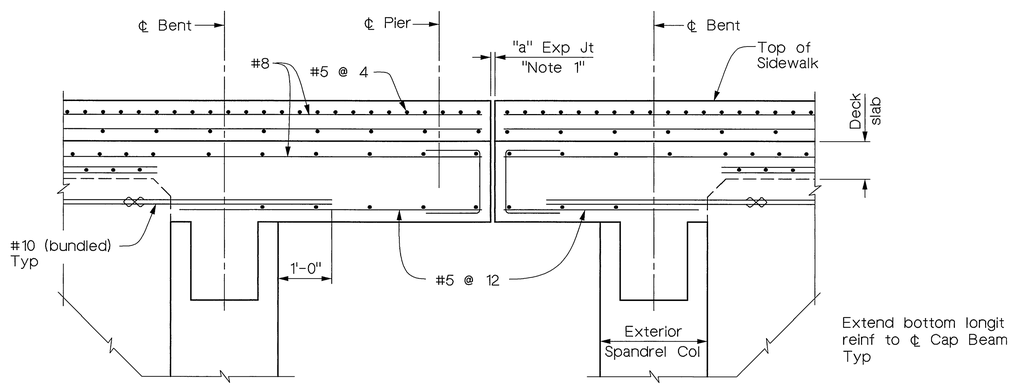

SECTION C-C

3/4" = 1'-0"

For information not shown
See "Section B-B"

Note:
Expansion Joint Assembly not shown.
See "Note 2"

Notes

1. For "a" dimension, see "Joint Seal Assembly (Max MR=4")" sheet.
2. For Expansion joint assembly details, see "Joint Seal Assembly (Max MR=4")" sheet.

Note:
The Contractor shall verify all controlling field dimensions before ordering or fabricating any material.

MIKE KATUSIAN DESIGN OVERSIGHT 12/20/02 SIGN OFF DATE	DESIGN	BY M. CHAR	CHECKED T.W. DUDLEY	CITY OF RIVERSIDE	G.J. NASCIMENTO PROJECT ENGINEER	BRIDGE NO. 56C-55 POST MILE
	DETAILS	BY R. ANDRASEK	CHECKED T.W. DUDLEY			
	QUANTITIES	BY N. MORCILLO	CHECKED Y. KIM			

VICTORIA AVENUE BRIDGE
SEISMIC RETROFIT
EXPANSION JOINT DETAILS 2

ORIGINAL SCALE IN INCHES FOR REDUCED PLANS 0 1 2 3

CU
EA

DISREGARD PRINTS BEARING EARLIER REVISION DATES →

REVISION DATES (PRELIMINARY STAGE ONLY)

SHEET 41 OF 62

INDEXED 12-6-04 LH

DIST	COUNTY	ROUTE	POST MILES TOTAL PROJECT	SHEET NO.	TOTAL SHEETS
8	Riv	LOC			

REGISTERED CIVIL ENGINEER

12/20/02
PLANS APPROVAL DATE

REGISTERED PROFESSIONAL ENGINEER T.W. DUDLEY No. 39514 Exp. 12/31/05 CIVIL STATE OF CALIFORNIA

CITY OF RIVERSIDE
DEPARTMENT OF PUBLIC WORKS
3900 Main Street
Riverside, California 92522

LIM & NASCIMENTO ENGINEERING
12 Mauchly, Bldg L
Irvine, California 92618

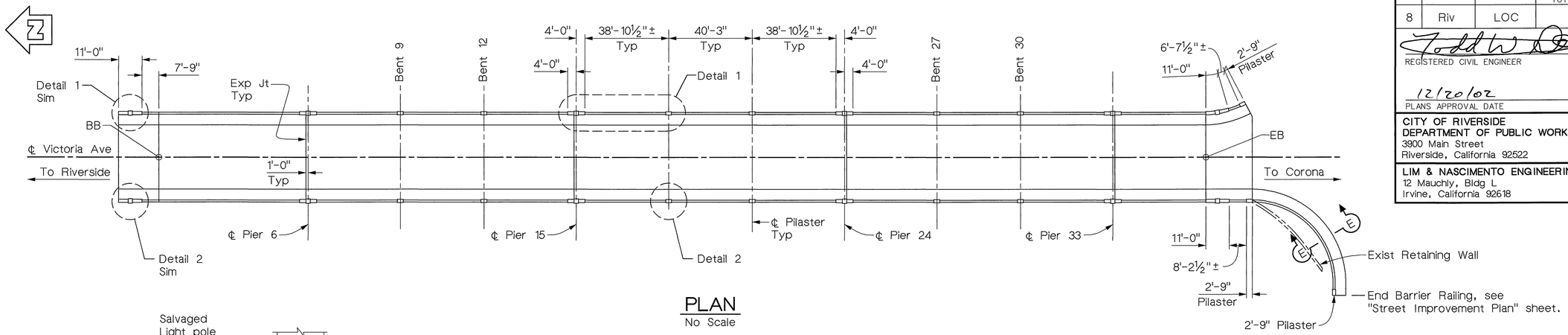

PLAN
No Scale

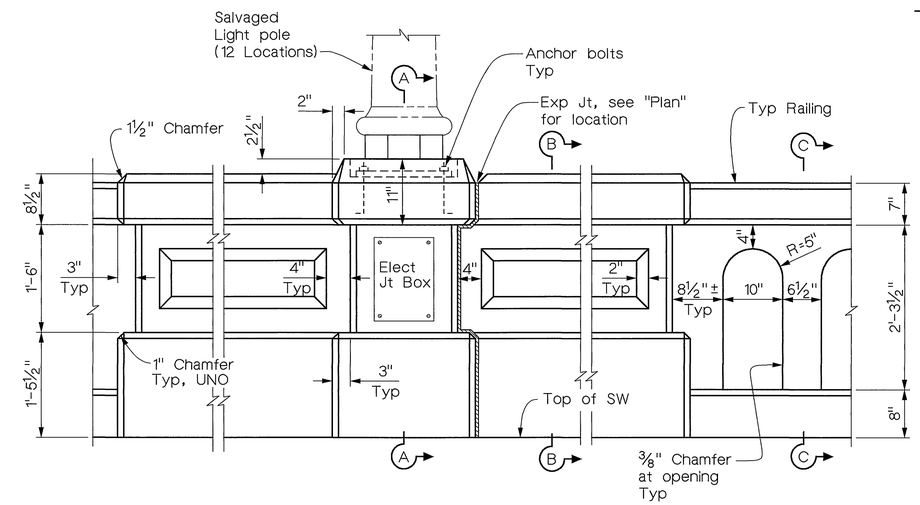

INTERIOR ELEVATION

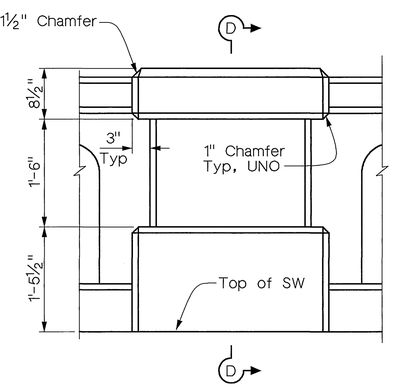

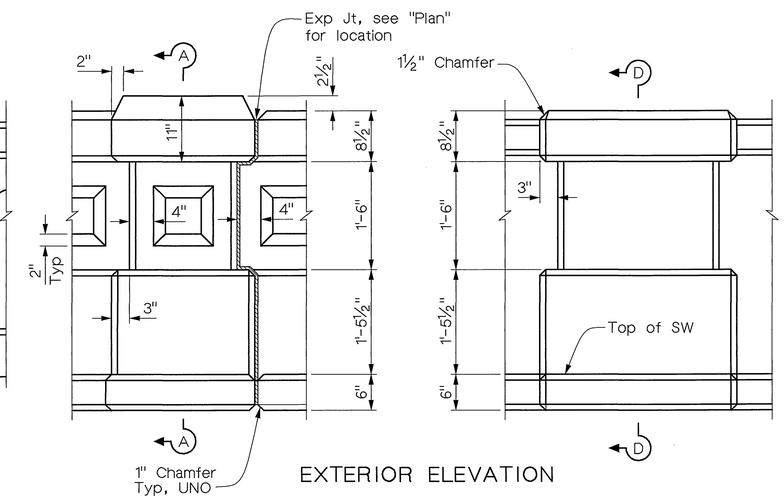

EXTERIOR ELEVATION

DETAIL 2
1" = 1'-0"

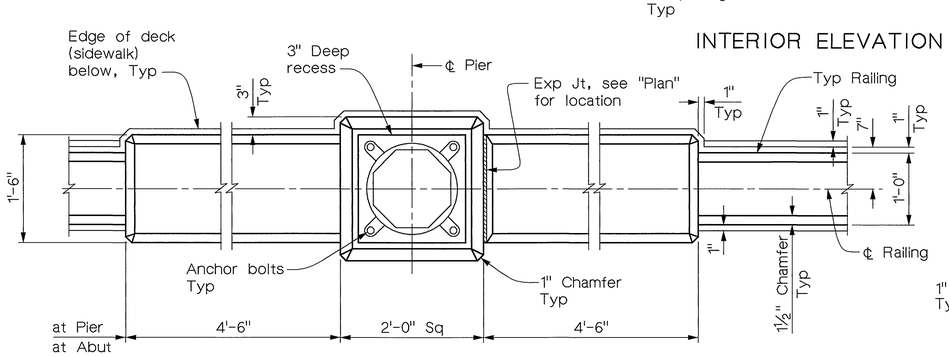

PLAN

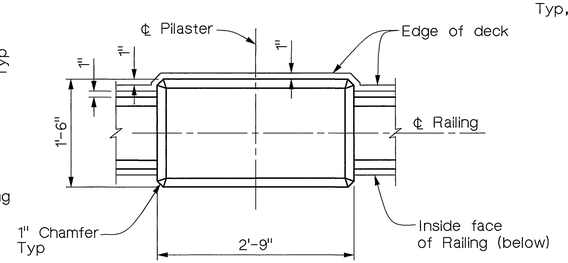

DETAIL 1
1" = 1'-0"

Note:
1. For "Sections A-A, B-B, C-C, & D-D", see "Barrier Railing Details 2" sheet.
2. For "Section E-E, see "Barrier Railing Details 3" sheet.

Note:
The Contractor shall verify all controlling field dimensions before ordering or fabricating any material.

MIKE KATUSIAN DESIGN OVERSIGHT 12/20/02 SIGN OFF DATE	DESIGN	BY M. CHAR	CHECKED T.W. DUDLEY	CITY OF RIVERSIDE	G.J. NASCIMENTO PROJECT ENGINEER
	DETAILS	BY E. GIROD	CHECKED T.W. DUDLEY		
	QUANTITIES	BY N. MORCILLO	CHECKED Y. KIM		

ORIGINAL SCALE IN INCHES FOR REDUCED PLANS 0 1 2 3

CU
EA

BRIDGE NO. 56C-55
POST MILE

VICTORIA AVENUE BRIDGE
SEISMIC RETROFIT
BARRIER RAILING DETAILS 1

DISREGARD PRINTS BEARING EARLIER REVISION DATES →
REVISION DATES (PRELIMINARY STAGE ONLY)

SHEET 42 OF 62

INDEXED 12-6-04 LFH

DIST	COUNTY	ROUTE	POST MILES TOTAL PROJECT	SHEET NO.	TOTAL SHEETS
8	Riv	LOC			

REGISTERED CIVIL ENGINEER

12/20/02
PLANS APPROVAL DATE

REGISTERED PROFESSIONAL ENGINEER T.W. DUDLEY No. 39514 Exp. 12/31/05 CIVIL STATE OF CALIFORNIA

CITY OF RIVERSIDE
DEPARTMENT OF PUBLIC WORKS
3900 Main Street
Riverside, California 92522

LIM & NASCIMENTO ENGINEERING
12 Mauchly, Bldg L
Irvine, California 92618

Notes:

1. For Typical Sidewalk reinf, see B0-5 / 5-15
2. Install salvaged Light post with new anchor bolts. Size & number of anchor bolts to match existing. Existing Base plates may need to be replaced.
3. Minimum 1" Dia conduit & Junction Box. For Street Lighting see, "Electrical Plans"
4. Deck overhang reinforcement not shown for clarity. See "Typical Section" sheet for details.

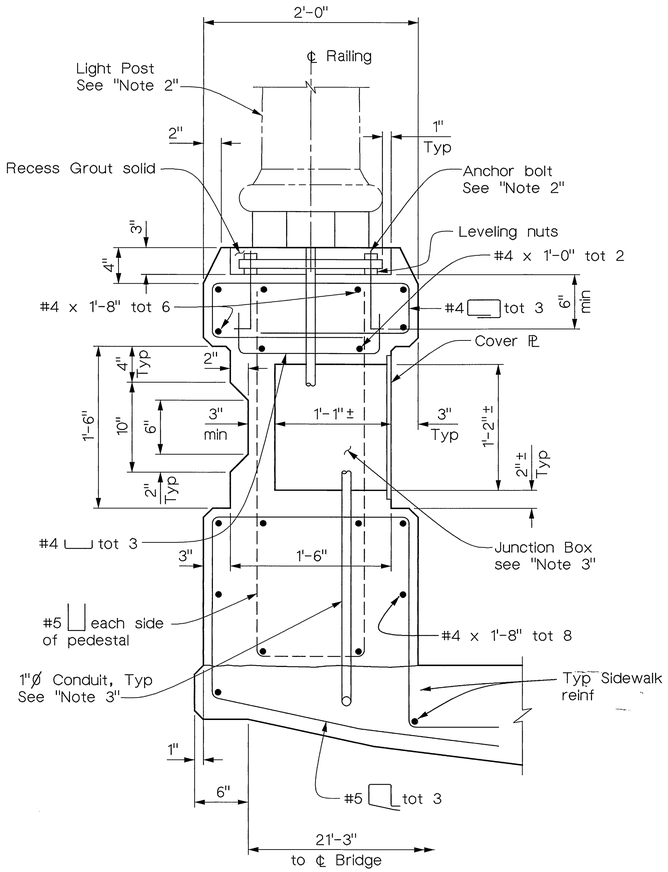

SECTION A-A
1½" = 1'-0"

Note:
Longit reinf from
"Section B-B" not shown

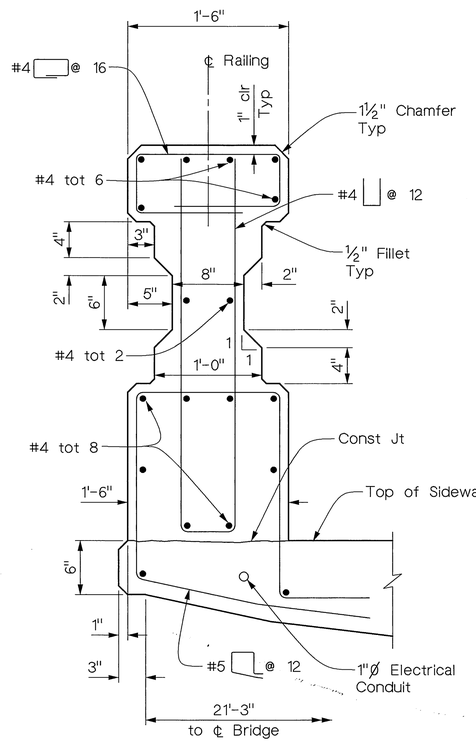

SECTION B-B
1½" = 1'-0"

Note:
Barrier dimensions
shown are typical

Note:
Longit reinf from
"Section C-C" not shown

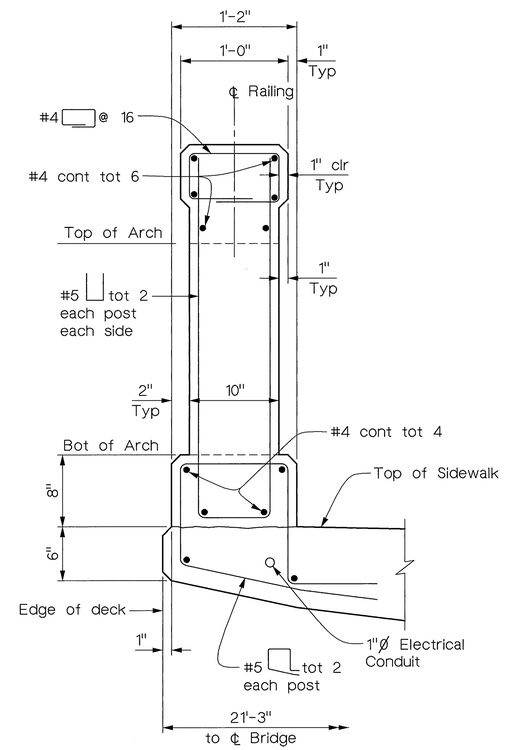

SECTION C-C
1½" = 1'-0"

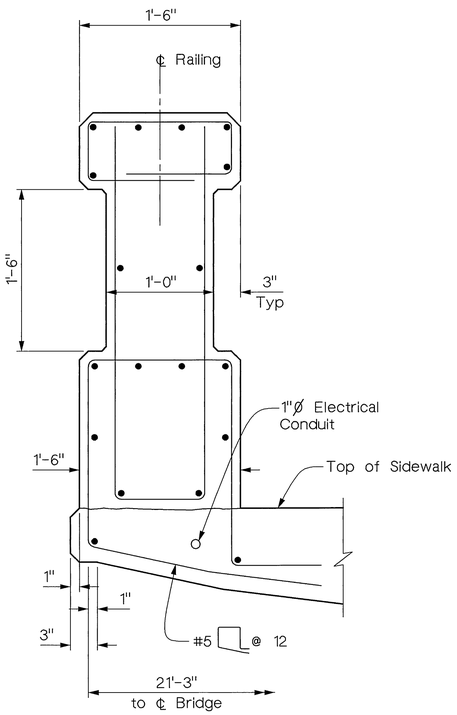

SECTION D-D
1½" = 1'-0"

Note:
For information not shown
see "Section B-B"

Note:
The Contractor shall verify all
controlling field dimensions before
ordering or fabricating any material.

MIKE KATUSIAN
DESIGN OVERSIGHT
12/20/02
SIGN OFF DATE

	BY	CHECKED
DESIGN	M. CHAR	T.W. DUDLEY
DETAILS	R. ANDRASEK	T.W. DUDLEY
QUANTITIES	N. MORCILLO	Y. KIM

CITY OF RIVERSIDE

G.J. NASCIMENTO
PROJECT ENGINEER

BRIDGE NO. 56C-55
POST MILE

VICTORIA AVENUE BRIDGE
SEISMIC RETROFIT
BARRIER RAILING DETAILS 2

ORIGINAL SCALE IN INCHES FOR REDUCED PLANS 0 1 2 3

CU
EA

DISREGARD PRINTS BEARING EARLIER REVISION DATES →

REVISION DATES (PRELIMINARY STAGE ONLY)

SHEET 43 OF 62

INDEXED 12-6-04 [illegible]

DIST	COUNTY	ROUTE	POST MILES TOTAL PROJECT	SHEET NO.	TOTAL SHEETS
8	Riv	LOC			

REGISTERED CIVIL ENGINEER

12/20/02
PLANS APPROVAL DATE

REGISTERED PROFESSIONAL ENGINEER T.W. DUDLEY No. 39514 Exp. 12/31/05 CIVIL STATE OF CALIFORNIA

CITY OF RIVERSIDE
DEPARTMENT OF PUBLIC WORKS
3900 Main Street
Riverside, California 92522

LIM & NASCIMENTO ENGINEERING
12 Mauchly, Bldg L
Irvine, California 92618

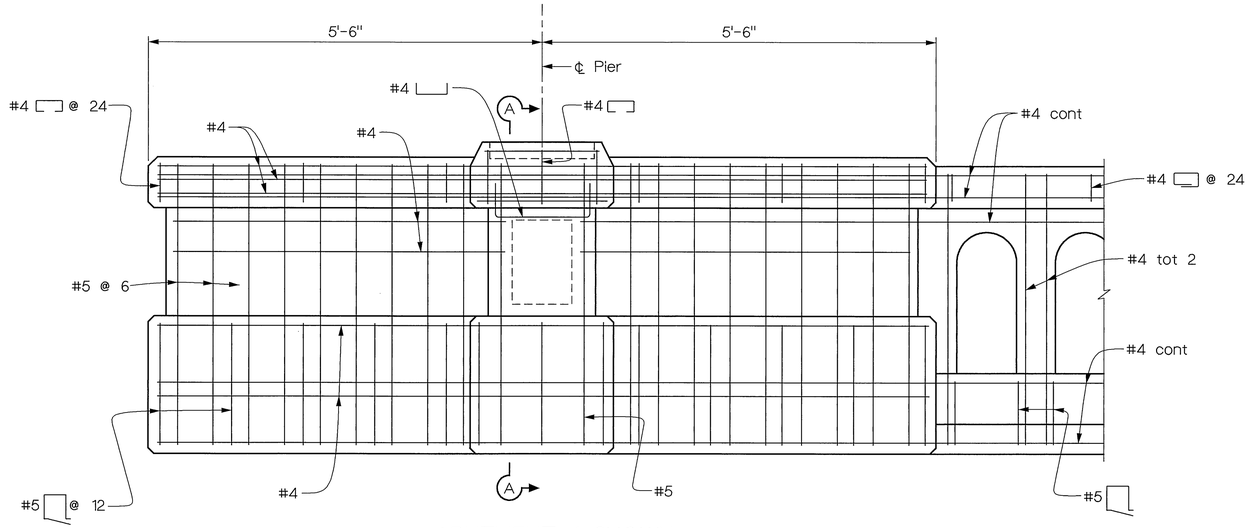

ABUTMENT 1 SHOWN
ABUTMENT 36 SIMILAR

INTERIOR ELEVATION AT ABUTMENTS

1" = 1'-0"

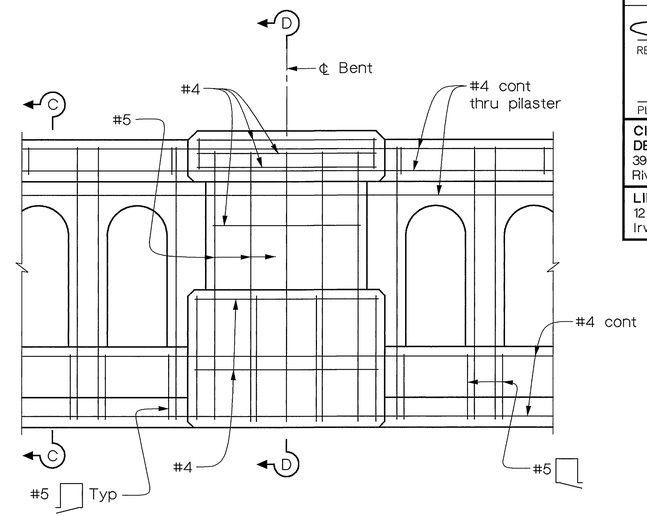

BENTS 9, 12, 18, 21, 27 & 30

INTERIOR ELEVATION AT BENTS

1" = 1'-0"

Note:

1. For "Sections A-A, B-B, C-C & D-D, see "Barrier Railing Details 2" sheet.

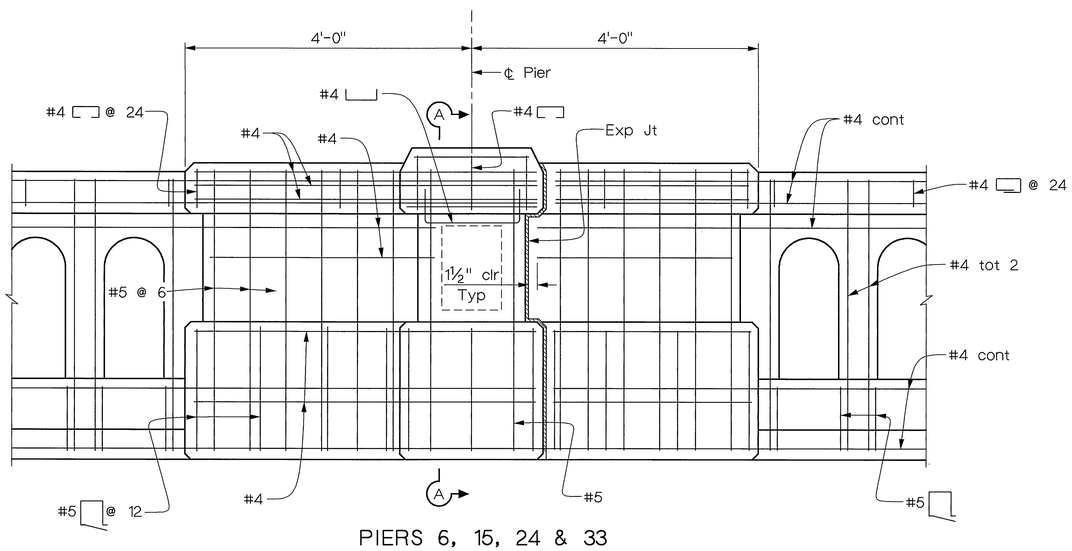

PIERS 6, 15, 24 & 33

INTERIOR ELEVATION AT PIERS

1" = 1'-0"

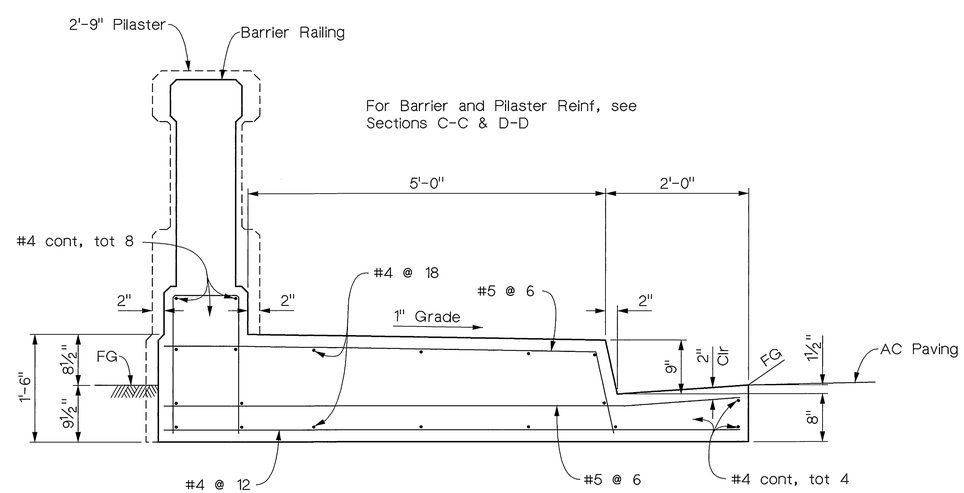

SECTION E-E

1" = 1'-0"

Note:
The Contractor shall verify all controlling field dimensions before ordering or fabricating any material.

MIKE KATUSIAN DESIGN OVERSIGHT 12/20/02 SIGN OFF DATE	DESIGN	BY M. CHAR	CHECKED T.W. DUDLEY	CITY OF RIVERSIDE	G.J. NASCIMENTO PROJECT ENGINEER	BRIDGE NO. 56C-55 POST MILE
	DETAILS	BY N. MORCILLO	CHECKED T.W. DUDLEY			
	QUANTITIES	BY N. MORCILLO	CHECKED Y. KIM			

VICTORIA AVENUE BRIDGE
SEISMIC RETROFIT
BARRIER RAILING DETAILS 3

ORIGINAL SCALE IN INCHES FOR REDUCED PLANS 0 1 2 3

CU
EA

DISREGARD PRINTS BEARING EARLIER REVISION DATES →

REVISION DATES (PRELIMINARY STAGE ONLY)

SHEET 44 OF 62

INDEXED 12-6-04 GH

DIST	COUNTY	ROUTE	POST MILES TOTAL PROJECT	SHEET NO.	TOTAL SHEETS
8	Riv	LOC			

REGISTERED CIVIL ENGINEER

12/20/02
PLANS APPROVAL DATE

REGISTERED PROFESSIONAL ENGINEER T.W. DUDLEY No. 39514 Exp. 12/31/05 CIVIL STATE OF CALIFORNIA

CITY OF RIVERSIDE
DEPARTMENT OF PUBLIC WORKS
3900 Main Street
Riverside, California 92522

LIM & NASCIMENTO ENGINEERING
12 Mauchly, Bldg L
Irvine, California 92618

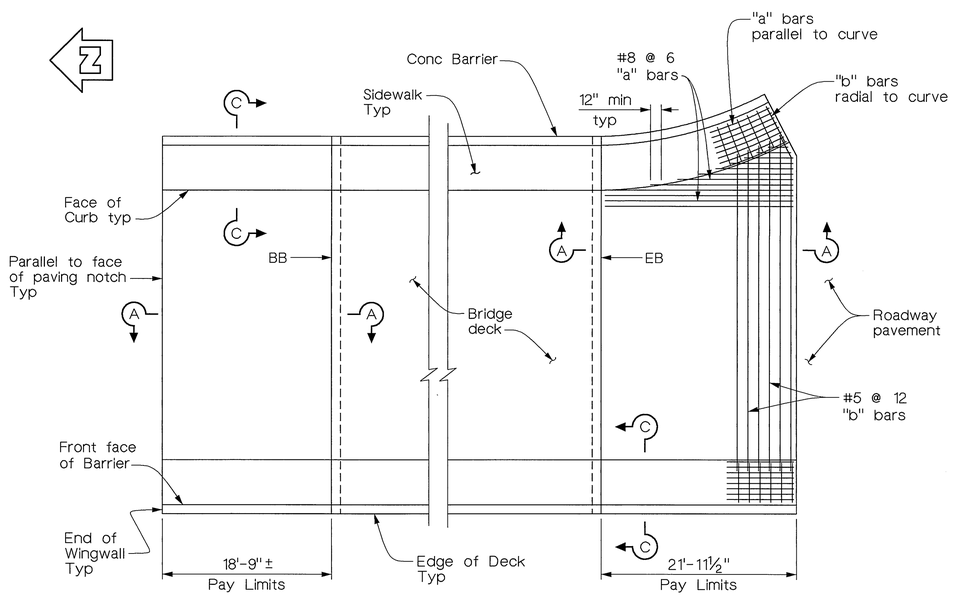

PLAN
⅛" = 1'-0"

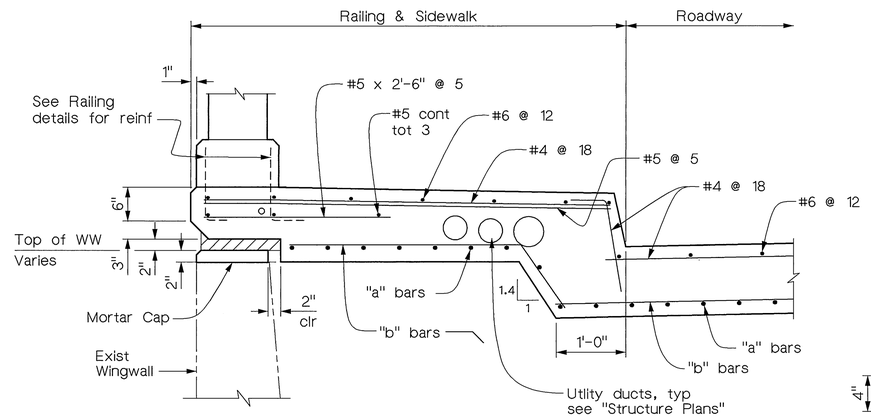

SECTION C-C
1" = 1'-0"

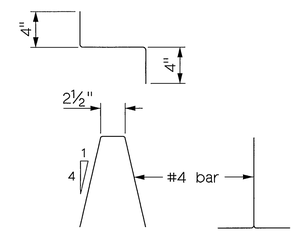

BAR CHAIR DETAIL
No Scale

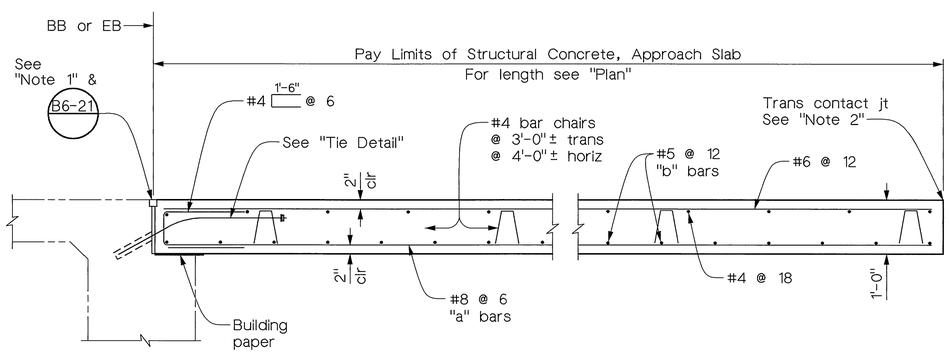

SECTION A-A
¾" = 1'-0"

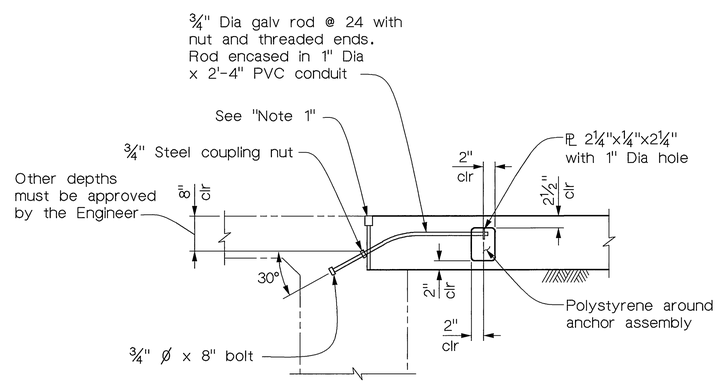

TIE DETAIL
¾" = 1'-0"

Notes:

1. For details not shown or noted, see "Structure Plans". Adjust bar reinforcement to clear a sawcut for sealed joint, when required.
2. For transverse contact joint with new PCC paving refer to Standard Plan A35-A.
3. Space to avoid existing main deck reinforcement.

LEGEND

Polystyrene to be removed

Note:
The Contractor shall verify all controlling field dimensions before ordering or fabricating any material.

MIKE KATUSIAN, DESIGN OVERSIGHT, SIGN OFF DATE 12/20/02	DESIGN	BY M. CHAR	CHECKED T.W. DUDLEY	CITY OF RIVERSIDE	G.J. NASCIMENTO, PROJECT ENGINEER
	DETAILS	BY R. ANDRASEK	CHECKED T.W. DUDLEY		
	QUANTITIES	BY N. MORCILLO	CHECKED Y. KIM		

BRIDGE NO. 56C-55
POST MILE

VICTORIA AVENUE BRIDGE
SEISMIC RETROFIT
STRUCTURE APPROACH DETAILS

ORIGINAL SCALE IN INCHES FOR REDUCED PLANS 0 1 2 3
CU
EA
DISREGARD PRINTS BEARING EARLIER REVISION DATES
REVISION DATES (PRELIMINARY STAGE ONLY)
SHEET 45 OF 62

INDEXED 12-6-04 GH

DIST	COUNTY	ROUTE	POST MILES TOTAL PROJECT	SHEET NO.	TOTAL SHEETS
8	Riv	LOC			

REGISTERED CIVIL ENGINEER

12/20/02
PLANS APPROVAL DATE

REGISTERED PROFESSIONAL ENGINEER T.W. DUDLEY No. 39514 Exp. 12/31/05 CIVIL STATE OF CALIFORNIA

CITY OF RIVERSIDE
DEPARTMENT OF PUBLIC WORKS
3900 Main Street
Riverside, California 92522

LIM & NASCIMENTO ENGINEERING
12 Mauchly, Bldg L
Irvine, California 92618

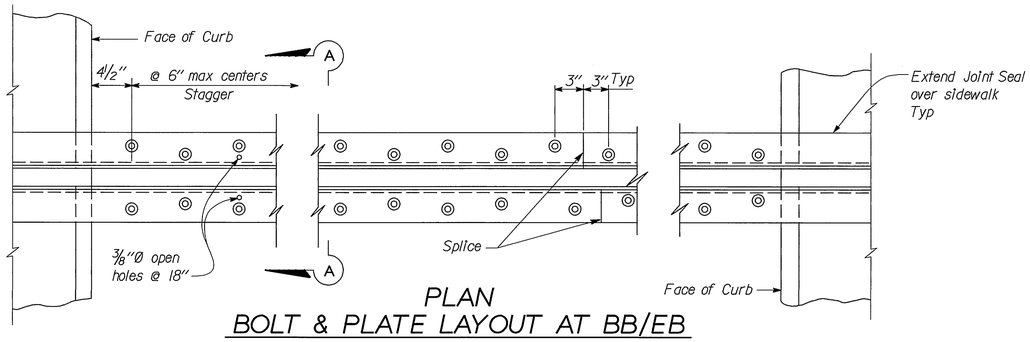

PLAN
BOLT & PLATE LAYOUT AT BB/EB
No Scale

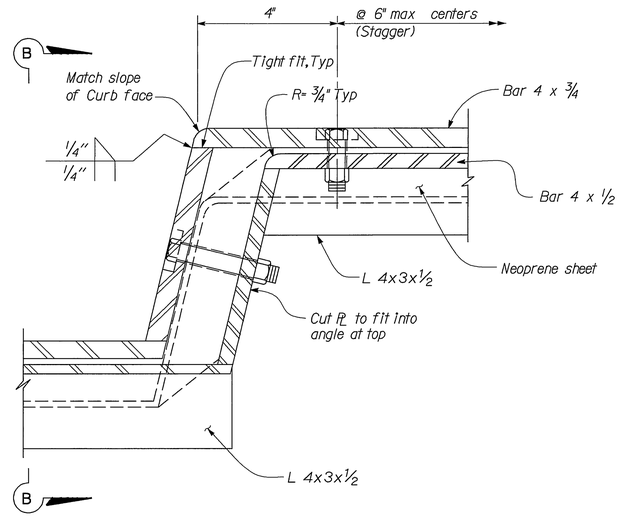

SIDEWALK DETAIL
No Scale

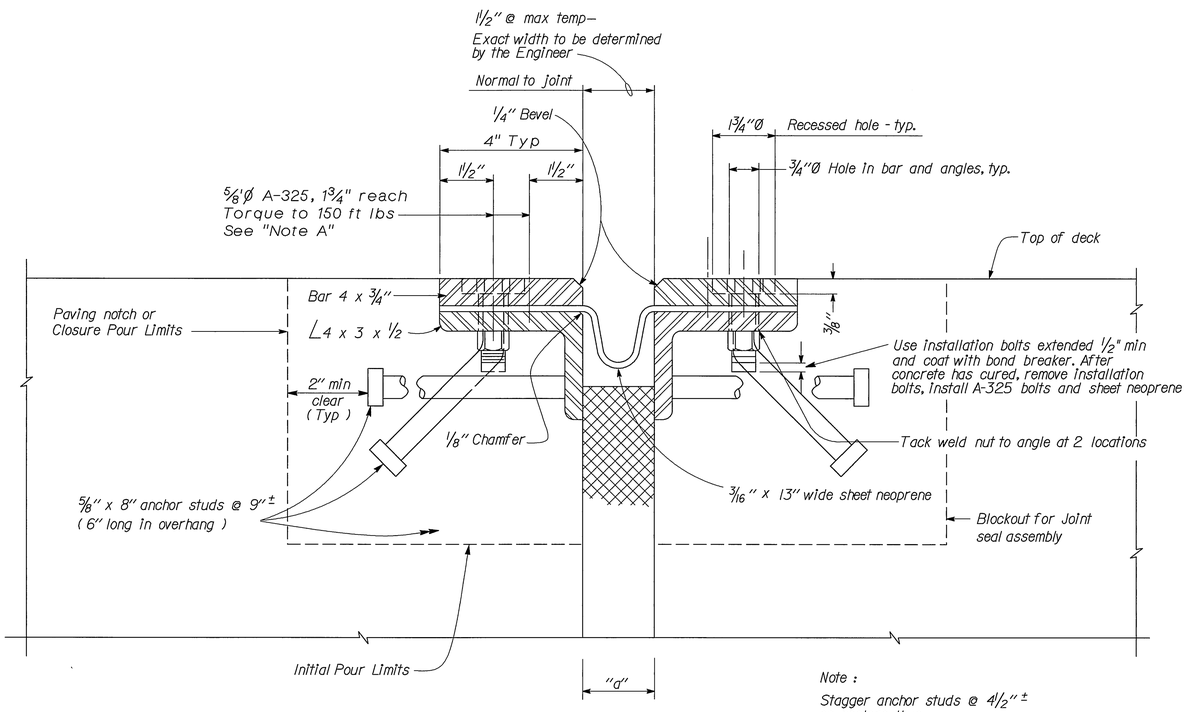

SECTION A-A
No Scale

Note :
Stagger anchor studs @ 4½"± on centers thus :

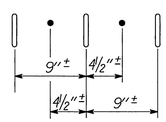

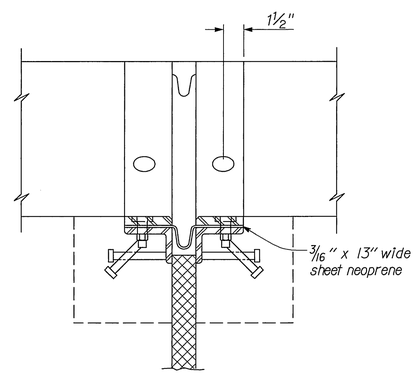

VIEW B-B
No Scale

Note:
The Contractor shall verify all controlling field dimensions before ordering or fabricating any material.

Joint Information			"d" Dimensions		
Location	Movement Rating (MR)	Skew	Winter	Spring & Fall	Summer
PIERS 6, 15, 24 & 33	4"	0°	2½"	2"	1½"

NOTES:

Full penetration butt welds may be substituted for fillet welds on all anchor studs.

Alternate types of anchor studs may be permitted subject to the approval by the Engineer.

Joint seal assembly to be used in conjunction with closure pour. Closure pour shall not be placed until final deck surface is within the tolerance specified.

Use joint at crown of roadway, at any change in transverse slope in deck and at changes in horizontal direction. Place other joints at or near lanes. All metal parts to be painted or galvanized after fabrication.

Sheet neoprene shall be fabricated in one continuous piece or joints shall be vulcanized. Neoprene shall be fabricated to bend around corners. 1" holes in neoprene sheets shall be drilled or punched so that the neoprene is not distorted at the time of installation.

NOTE A

Insert assembly or expansion anchorage for ⅝" x 1¾" A-325 bolt.

MIKE KATUSIAN
DESIGN OVERSIGHT
12/20/02
SIGN/OFF DATE

	BY	CHECKED
DESIGN	M. CHAR	T.W. DUDLEY
DETAILS	N. MORCILLO	T.W. DUDLEY
QUANTITIES	N. MORCILLO	Y. KIM

CITY OF RIVERSIDE

G.J. NASCIMENTO
PROJECT ENGINEER

BRIDGE NO. 56C-55
POST MILE

VICTORIA AVENUE BRIDGE
SEISMIC RETROFIT
JOINT SEAL ASSEMBLY
(MAXIMUM MOVEMENT RATING = 4")

ORIGINAL SCALE IN INCHES FOR REDUCED PLANS 0 1 2 3

CU
EA

DISREGARD PRINTS BEARING EARLIER REVISION DATES →
REVISION DATES (PRELIMINARY STAGE ONLY)

SHEET 46 OF 62

INDEXED 12-6-04 LFH

DIST	COUNTY	ROUTE	POST MILES TOTAL PROJECT	SHEET NO.	TOTAL SHEETS
8	Riv	LOC			

REGISTERED CIVIL ENGINEER

12/20/02
PLANS APPROVAL DATE

REGISTERED PROFESSIONAL ENGINEER T.W. DUDLEY No. 39514 Exp. 12/31/05 CIVIL STATE OF CALIFORNIA

CITY OF RIVERSIDE
DEPARTMENT OF PUBLIC WORKS
3900 Main Street
Riverside, California 92522

LIM & NASCIMENTO ENGINEERING
12 Mauchly, Bldg L
Irvine, California 92618

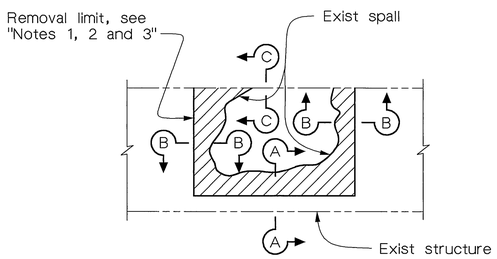

PLAN

TYPICAL CONCRETE SPALL DEFECT

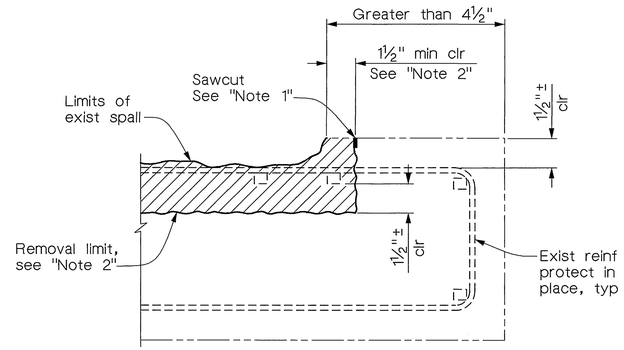

SECTION A-A

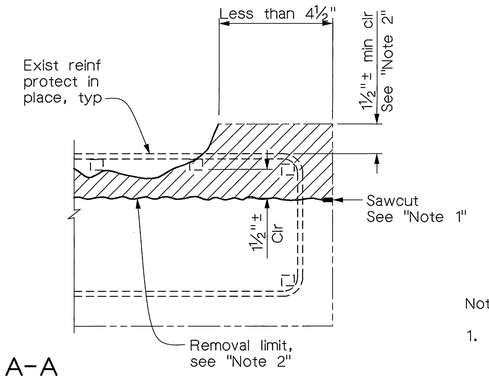

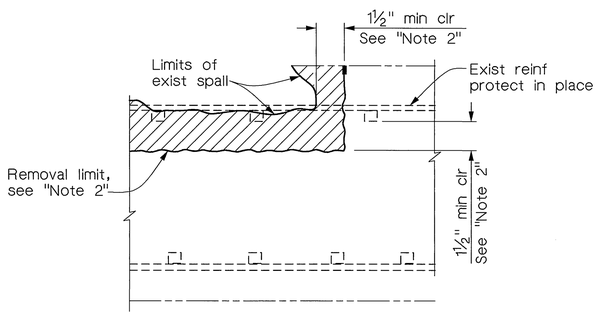

SECTION B-B

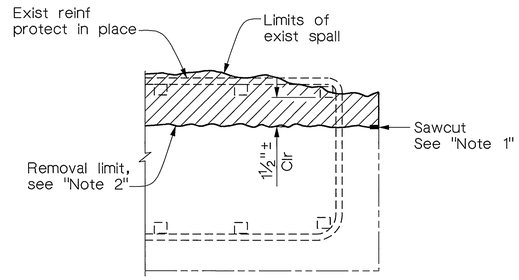

SECTION C-C

LEGEND

- Existing structure
- New construction
- Bent or Pier number
- Longit Girder or Arch Rib designation
- Bridge removal (portion)
- Repair View

Notes:

1. Sawcut ¾" all around removal limits. Removal edges shall be made perpendicular to adjacent concrete surfaces. Feathering of removal at edges will not be allowed.
2. Removals shall expose hard, sound concrete with a roughened surface texture.
3. Removal limits shall be rectangular or square in shape.
4. For Views 1 thru 4, see "Bridge Repair Details 2" sheet.
   For Views 5 and 6, see "Bridge Repair Details 3" sheet.
   For Views 7 and 8, see "Bridge Repair Details 4" sheet.
   For Views 9 and 10, see "Bridge Repair Details 5" sheet.
   For Views 11 and 12, see "Bridge Repair Details 6" sheet.
   For View 13, see "Bridge Repair Details 7" sheet.
5. Removal limits for crack repairs, where removal occurs, shall be similar to removal limits for concrete spall repairs, where visible limits of cracks are treated as being similar to the limits of concrete spall.

BRIDGE REMOVAL (PORTION) LIMITS FOR CONCRETE SPALL REPAIRS

No Scale (See "Note 5")

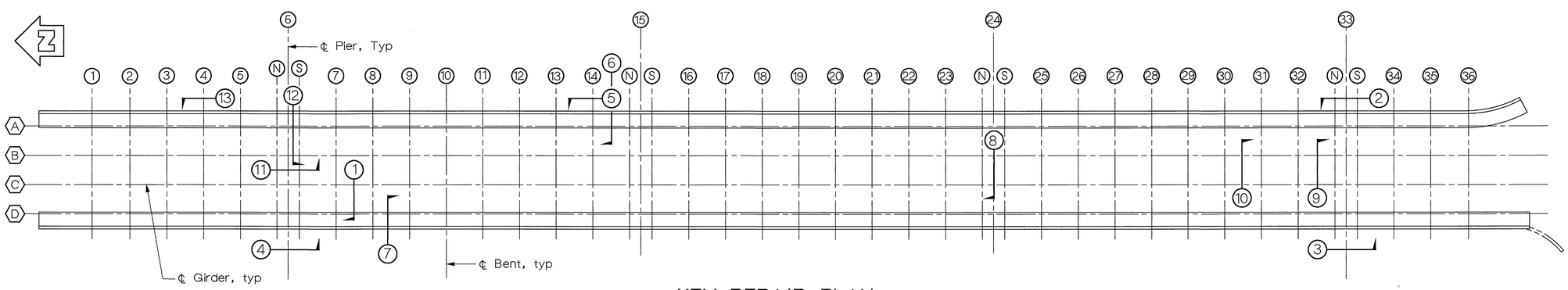

KEY REPAIR PLAN

1" = 20'

Note:
The Contractor shall verify all controlling field dimensions before ordering or fabricating any material.

MIKE KATUSIAN, DESIGN OVERSIGHT; 12/20/02, SIGN-OFF DATE	DESIGN	BY M. CHAR	CHECKED T.W. DUDLEY	CITY OF RIVERSIDE	G.J. NASCIMENTO, PROJECT ENGINEER
	DETAILS	BY N. MORCILLO	CHECKED T.W. DUDLEY		
	QUANTITIES	BY N. MORCILLO	CHECKED Y. KIM		

ORIGINAL SCALE IN INCHES FOR REDUCED PLANS 0 1 2 3

CU
EA

BRIDGE NO. 56C-55
POST MILE

VICTORIA AVENUE BRIDGE
SEISMIC RETROFIT
BRIDGE REPAIR DETAILS 1

DISREGARD PRINTS BEARING EARLIER REVISION DATES →
REVISION DATES (PRELIMINARY STAGE ONLY)

SHEET 47 OF 62

INDEXED 12-6-04 JH

DIST	COUNTY	ROUTE	POST MILES TOTAL PROJECT	SHEET NO.	TOTAL SHEETS
8	Riv	LOC			

REGISTERED CIVIL ENGINEER

12/20/02
PLANS APPROVAL DATE

REGISTERED PROFESSIONAL ENGINEER T.W. DUDLEY No. 39514 Exp. 12/31/05 CIVIL STATE OF CALIFORNIA

CITY OF RIVERSIDE
DEPARTMENT OF PUBLIC WORKS
3900 Main Street
Riverside, California 92522

LIM & NASCIMENTO ENGINEERING
12 Mauchly, Bldg L
Irvine, California 92618

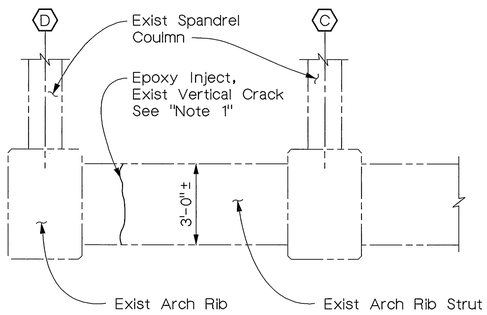

VIEW 1
(BENT 7 ARCH STRUT BEAM)
3/8" = 1'-0"

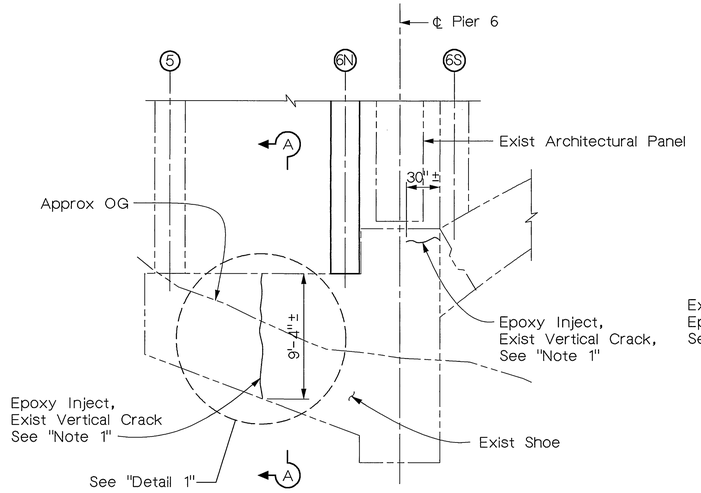

VIEW 4
(ARCHITECTURAL PANEL)
3/16" = 1'-0"

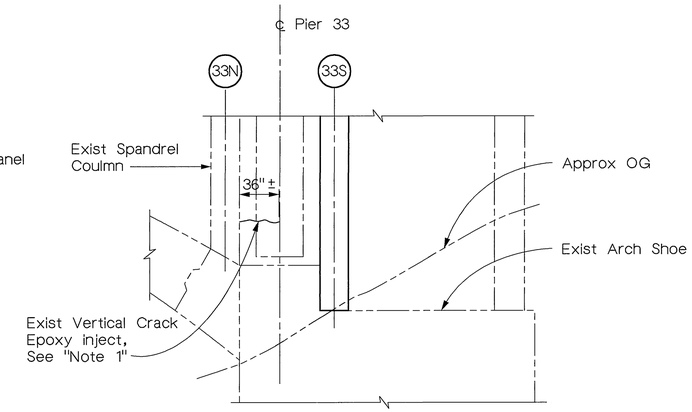

VIEW 3
(ARCHITECTURAL PANEL)
3/16" = 1'-0"

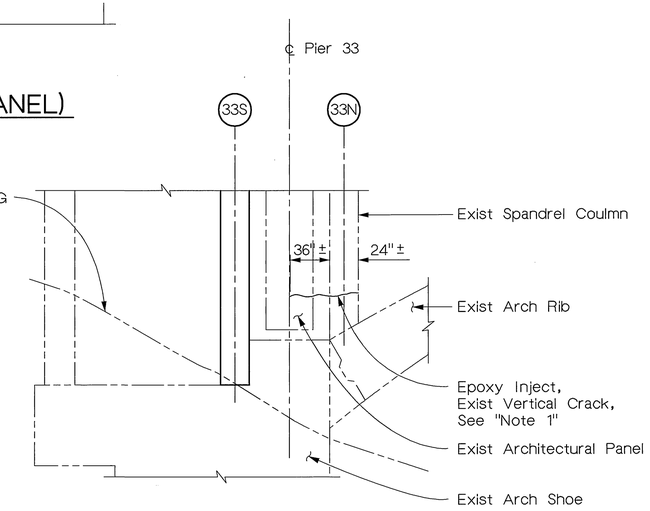

VIEW 2
(ARCHITECTURAL PANEL
& SPANDREL COLUMN)
3/16" = 1'-0"

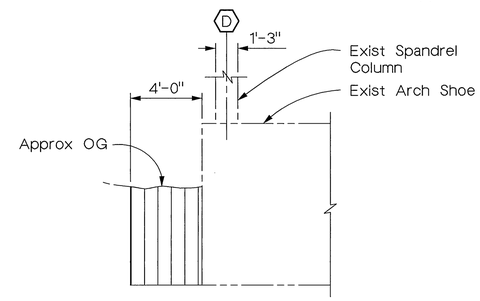

BACKFILL
1/4" = 1'-0"

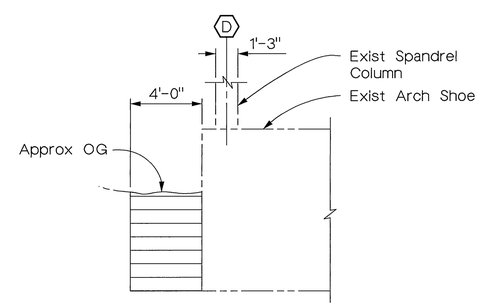

EXCAVATION
SECTION A-A
1/4" = 1'-0"

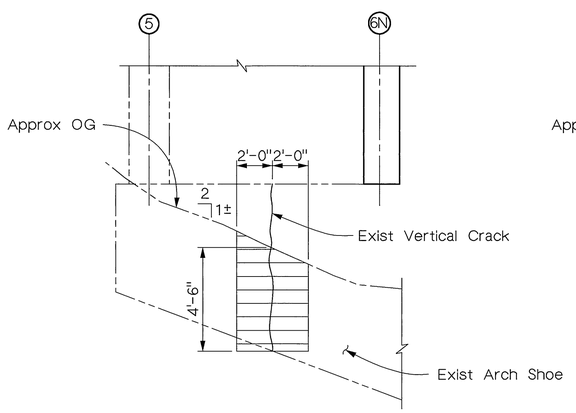

EXCAVATION
BEFORE

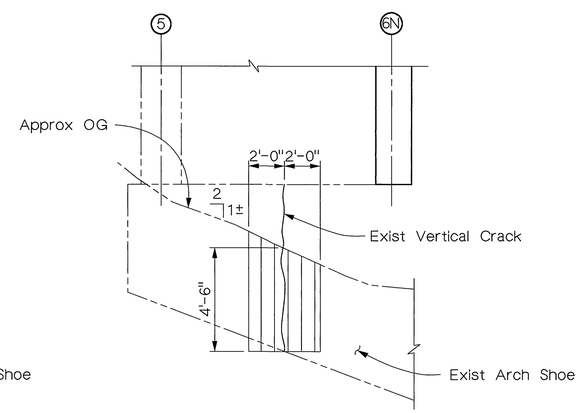

BACKFILL
AFTER

DETAIL 1
1/4" = 1'-0"

LIMITS OF PAYMENT
FOR EXCAVATION & BACKFILL

Notes:

1. Limits shown for epoxy injection are approximate. Final pay limits for epoxy injection shall be established during construction.

LEGEND

Soil excavation limits

Backfill limits

Note:
The Contractor shall verify all controlling field dimensions before ordering or fabricating any material.

MIKE KATUSIAN
DESIGN OVERSIGHT
12/20/02
SIGN OFF DATE

	BY	CHECKED
DESIGN	M. CHAR	T.W. DUDLEY
DETAILS	T. DAVID	T.W. DUDLEY
QUANTITIES	N. MORCILLO	Y. KIM

CITY OF RIVERSIDE

G.J. NASCIMENTO
PROJECT ENGINEER

BRIDGE NO. 56C-55
POST MILE

VICTORIA AVENUE BRIDGE
SEISMIC RETROFIT
BRIDGE REPAIR DETAILS 2

ORIGINAL SCALE IN INCHES FOR REDUCED PLANS 0 1 2 3

CU
EA

DISREGARD PRINTS BEARING EARLIER REVISION DATES →

REVISION DATES (PRELIMINARY STAGE ONLY)

SHEET 48 OF 62

INDEXED 12-6-04 LFH

DIST	COUNTY	ROUTE	POST MILES TOTAL PROJECT	SHEET NO.	TOTAL SHEETS
8	Riv	LOC			

REGISTERED CIVIL ENGINEER

12/20/02
PLANS APPROVAL DATE

REGISTERED PROFESSIONAL ENGINEER T.W. DUDLEY No. 39514 Exp. 12/31/05 CIVIL STATE OF CALIFORNIA

CITY OF RIVERSIDE
DEPARTMENT OF PUBLIC WORKS
3900 Main Street
Riverside, California 92522

LIM & NASCIMENTO ENGINEERING
12 Mauchly, Bldg L
Irvine, California 92618

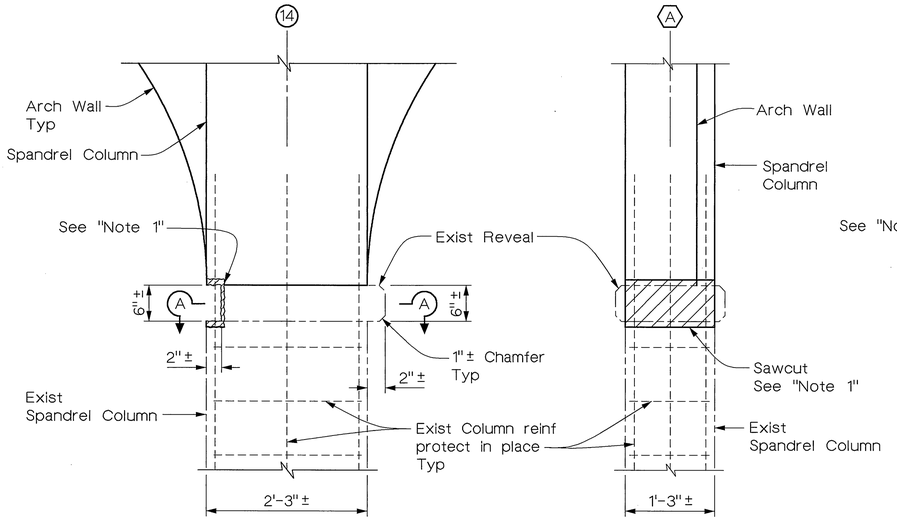

ELEVATION

ELEVATION

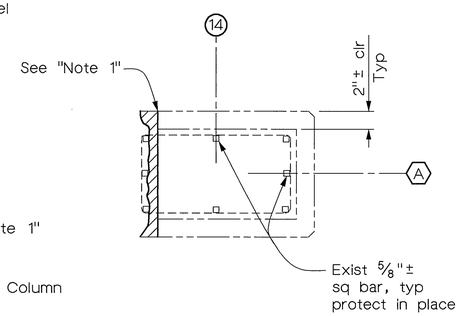

SECTION A-A

REMOVAL

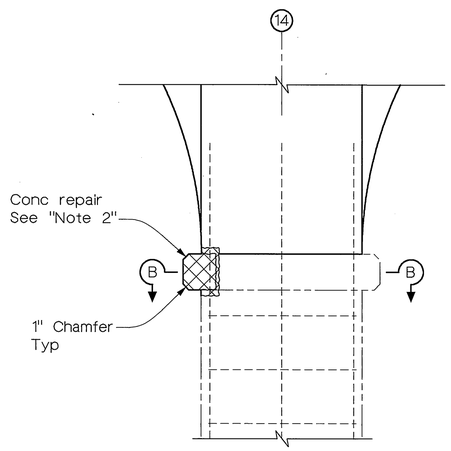

ELEVATION

VIEW 5

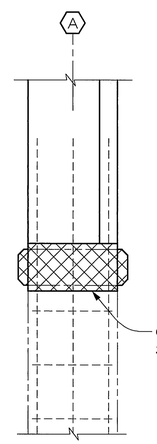

ELEVATION

VIEW 6

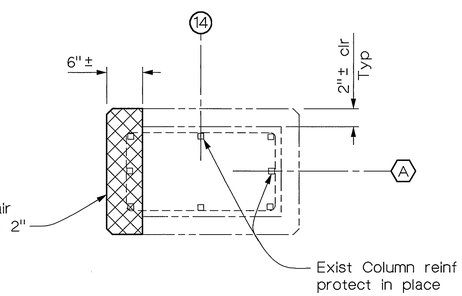

SECTION B-B

REPAIR

BENT 14 EXTERIOR SPANDREL COLUMN

1" = 1'-0"

Notes:

1. For bridge removal limits, see "Bridge Repair Details 1" sheet.
2. Limits of concrete repairs shall be made flush with adjacent existing concrete surfaces and shall be match existing structure geometry and architectural features & formwork.

LEGEND

Removal limits

Replace limits

Note:
The Contractor shall verify all controlling field dimensions before ordering or fabricating any material.

MIKE KATUSIAN
DESIGN OVERSIGHT
12/20/02
SIGN/OFF DATE

	BY	CHECKED
DESIGN	M. CHAR	T.W. DUDLEY
DETAILS	N. MORCILLO	T.W. DUDLEY
QUANTITIES	N. MORCILLO	Y. KIM

CITY OF RIVERSIDE

G.J. NASCIMENTO
PROJECT ENGINEER

BRIDGE NO. 56C-55
POST MILE

VICTORIA AVENUE BRIDGE
SEISMIC RETROFIT
BRIDGE REPAIR DETAILS 3

ORIGINAL SCALE IN INCHES FOR REDUCED PLANS 0 1 2 3

CU
EA

DISREGARD PRINTS BEARING EARLIER REVISION DATES →

REVISION DATES (PRELIMINARY STAGE ONLY)

SHEET 49 OF 62

INDEXED 12-6-04 LH

DIST	COUNTY	ROUTE	POST MILES TOTAL PROJECT	SHEET NO.	TOTAL SHEETS
8	Riv	LOC			

REGISTERED CIVIL ENGINEER

12/20/02
PLANS APPROVAL DATE

REGISTERED PROFESSIONAL ENGINEER T.W. DUDLEY No. 39514 Exp. 12/31/05 CIVIL STATE OF CALIFORNIA

CITY OF RIVERSIDE
DEPARTMENT OF PUBLIC WORKS
3900 Main Street
Riverside, California 92522

LIM & NASCIMENTO ENGINEERING
12 Mauchly, Bldg L
Irvine, California 92618

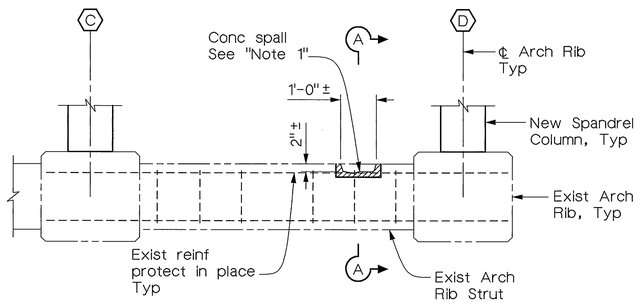

ELEVATION

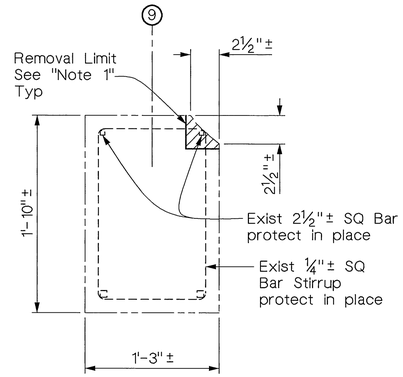

SECTION A-A

REMOVAL

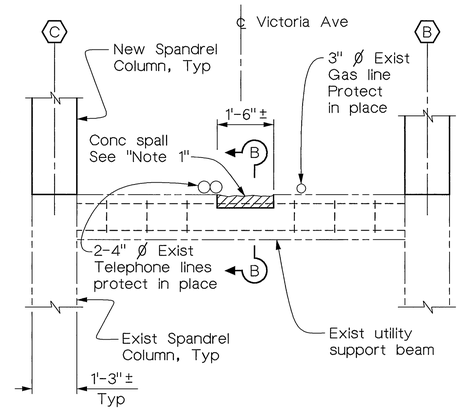

ELEVATION

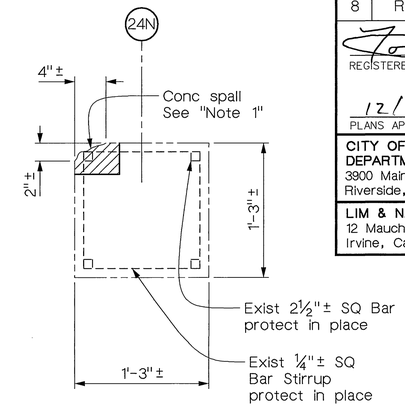

SECTION B-B

REMOVAL

REMOVAL

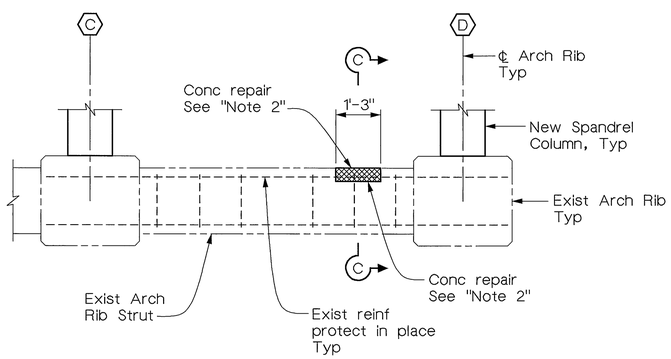

ELEVATION

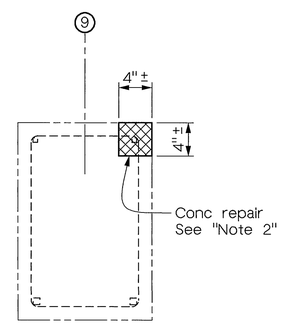

SECTION C-C

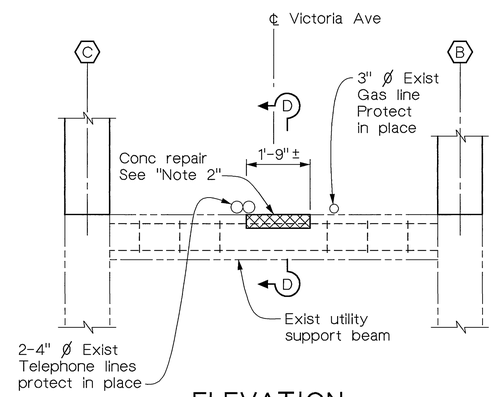

ELEVATION

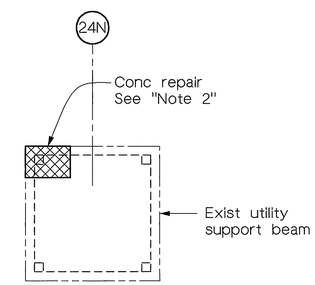

SECTION D-D

REPAIR

REPAIR

VIEW 7 - BENT 9 ARCH RIB STRUT BEAM

1½" = 1'-0"

VIEW 8 - BENT 24N UTILITY SUPPORT BEAM

1½" = 1'-0"

Notes:

1. For bridge removal limits, see "Bridge Repair Details 1" sheet.
2. Final limits of concrete repair to match limits of concrete removal as shown on "Bridge Repair Details 1" sheet.
3. Limits of concrete repairs shall be made flush with adjacent existing concrete surfaces and shall be match existing structure geometry and architectural features & formwork.

LEGEND

Removal limits

Repair limits

Note:
The Contractor shall verify all controlling field dimensions before ordering or fabricating any material.

MIKE KATUSIAN
DESIGN OVERSIGHT
12/20/02
SIGN OFF DATE

	BY	CHECKED
DESIGN	M. CHAR	T.W. DUDLEY
DETAILS	R. ANDRASEK	T.W. DUDLEY
QUANTITIES	N. MORCILLO	Y. KIM

CITY OF RIVERSIDE

G.J. NASCIMENTO
PROJECT ENGINEER

BRIDGE NO. 56C-55
POST MILE

VICTORIA AVENUE BRIDGE
SEISMIC RETROFIT
BRIDGE REPAIR DETAILS 4

ORIGINAL SCALE IN INCHES FOR REDUCED PLANS 0 1 2 3

CU
EA

DISREGARD PRINTS BEARING EARLIER REVISION DATES

REVISION DATES (PRELIMINARY STAGE ONLY)

SHEET 50 OF 62

INDEXED 12-6-04 4H

DIST	COUNTY	ROUTE	POST MILES TOTAL PROJECT	SHEET NO.	TOTAL SHEETS
8	Riv	LOC			

REGISTERED CIVIL ENGINEER

12/20/02
PLANS APPROVAL DATE

PROFESSIONAL ENGINEER — REGISTERED — T.W. DUDLEY — No. 39514 — Exp. 12/31/05 — CIVIL — STATE OF CALIFORNIA

CITY OF RIVERSIDE
DEPARTMENT OF PUBLIC WORKS
3900 Main Street
Riverside, California 92522

LIM & NASCIMENTO ENGINEERING
12 Mauchly, Bldg L
Irvine, California 92618

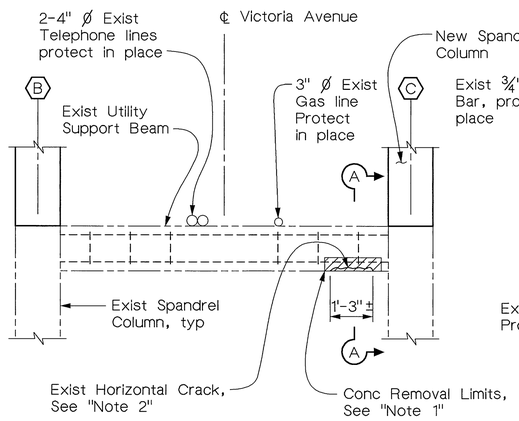

ELEVATION

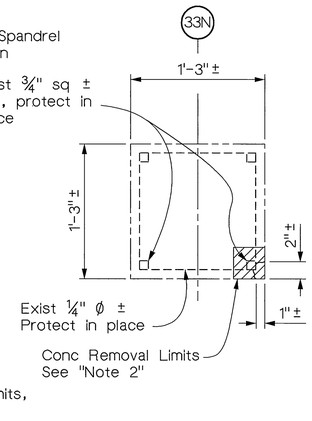

SECTION A-A

REMOVAL

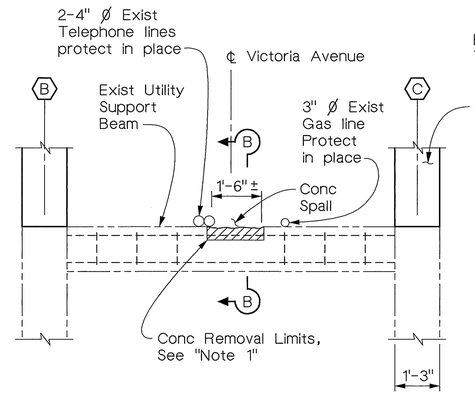

ELEVATION

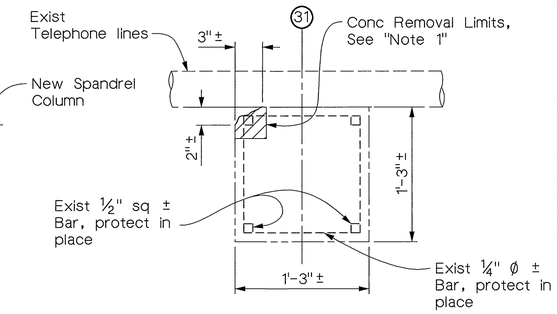

SECTION B-B

REMOVAL

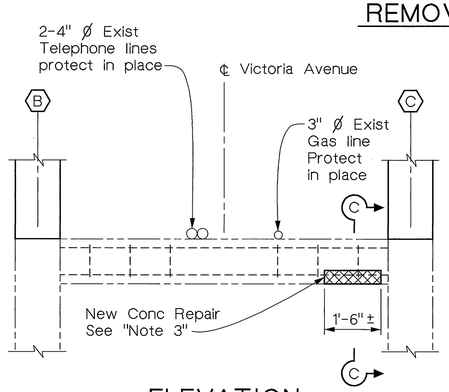

ELEVATION

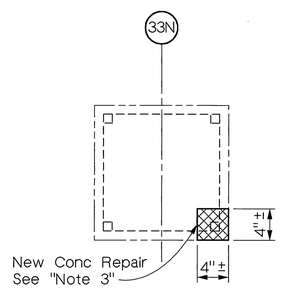

SECTION C-C

REPAIR

VIEW 9 - BENT 33N UTILITY SUPPORT BEAM

½" = 1'-0"

REMOVAL

½" = 1'-0"

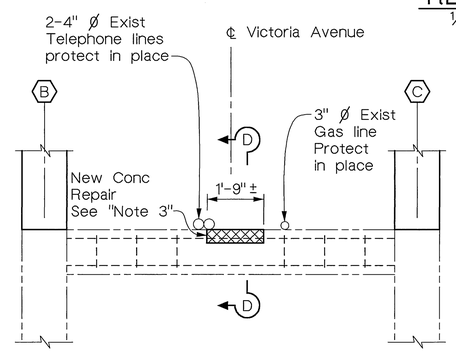

VIEW 10

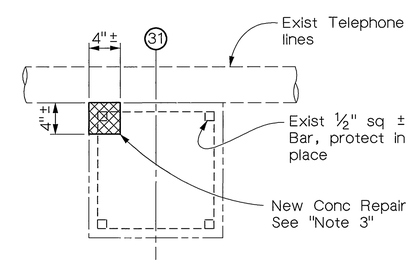

SECTION D-D

REPAIR

VIEW 10 - BENT 31 UTILITY SUPPORT BEAM

½" = 1'-0"

Notes:

1. See "Bridge Repair Details 1" sheet for details of bridge removal limits.
2. Removal limits for crack repairs shall be similar to removal limits for concrete spall repairs, where the visible limits of cracks are treated as being similar to the limits of concrete spalls.
3. Final limits of concrete repair to match limits of concrete removed as described on "Bridge Repair Details 1" sheet.
4. Limits of concrete repairs shall be made flush with adjacent concrete surfaces and shall match existing structure geometry and architectural features including formwork.

LEGEND

Removal limits

Repair limits

Note:
The Contractor shall verify all controlling field dimensions before ordering or fabricating any material.

MIKE KATUSIAN
DESIGN OVERSIGHT
12/20/02
SIGN OFF DATE

	BY	CHECKED
DESIGN	M. CHAR	T.W. DUDLEY
DETAILS	T. DAVID	T.W. DUDLEY
QUANTITIES	N. MORCILLO	Y. KIM

CITY OF RIVERSIDE

G.J. NASCIMENTO
PROJECT ENGINEER

BRIDGE NO. 56C-55
POST MILE

VICTORIA AVENUE BRIDGE
SEISMIC RETROFIT
BRIDGE REPAIR DETAILS 5

ORIGINAL SCALE IN INCHES FOR REDUCED PLANS 0 1 2 3

CU
EA

DISREGARD PRINTS BEARING EARLIER REVISION DATES →

REVISION DATES (PRELIMINARY STAGE ONLY)

SHEET 51 OF 62

INDEXED 12-6-04 (FH)

DIST	COUNTY	ROUTE	POST MILES TOTAL PROJECT	SHEET NO.	TOTAL SHEETS
8	Riv	LOC			

REGISTERED CIVIL ENGINEER

12/20/02
PLANS APPROVAL DATE

REGISTERED PROFESSIONAL ENGINEER T.W. DUDLEY No. 39514 Exp. 12/31/05 CIVIL STATE OF CALIFORNIA

CITY OF RIVERSIDE
DEPARTMENT OF PUBLIC WORKS
3900 Main Street
Riverside, California 92522

LIM & NASCIMENTO ENGINEERING
12 Mauchly, Bldg L
Irvine, California 92618

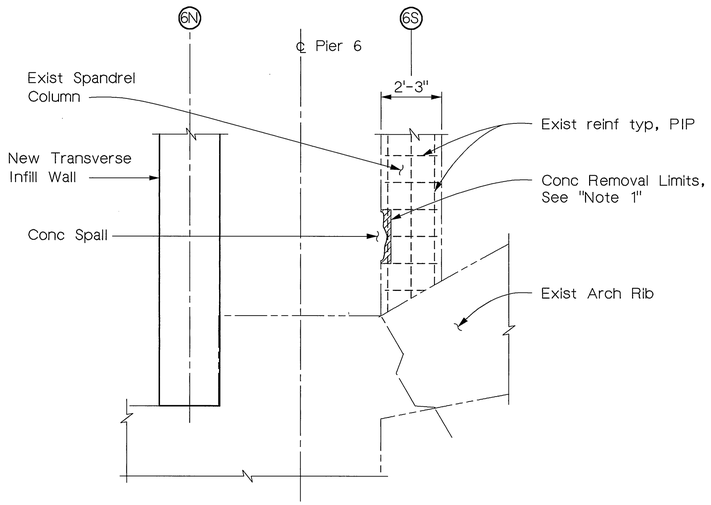

ELEVATION

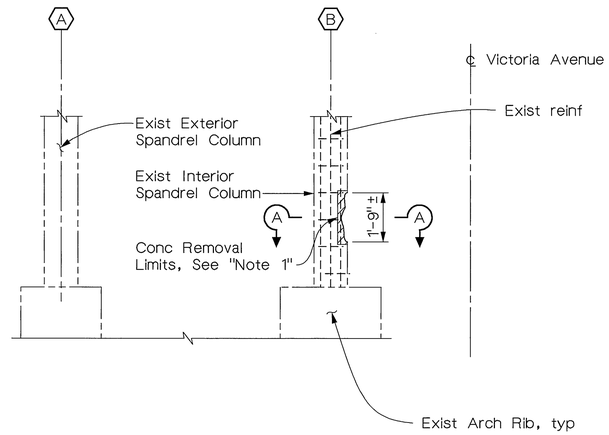

ELEVATION

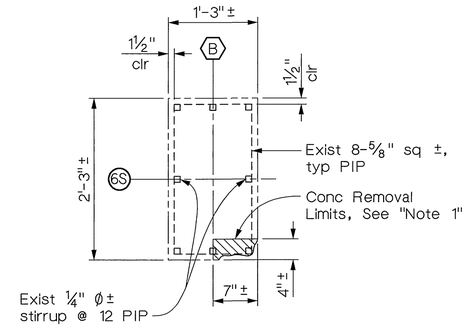

SECTION A-A
1" = 1'-0"

REMOVAL

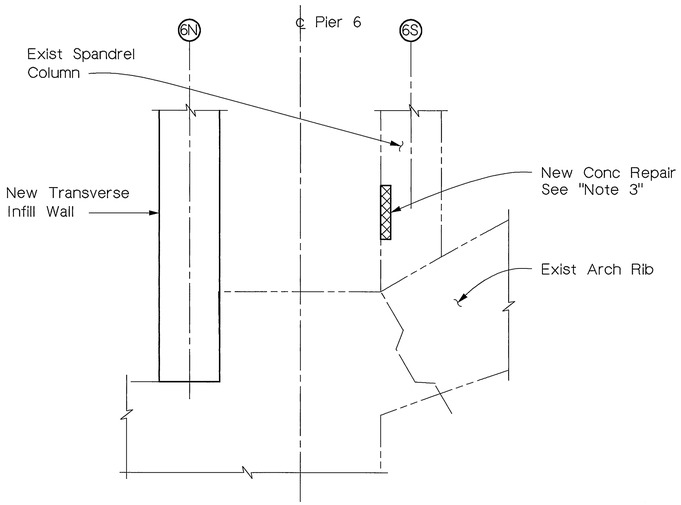

VIEW 11

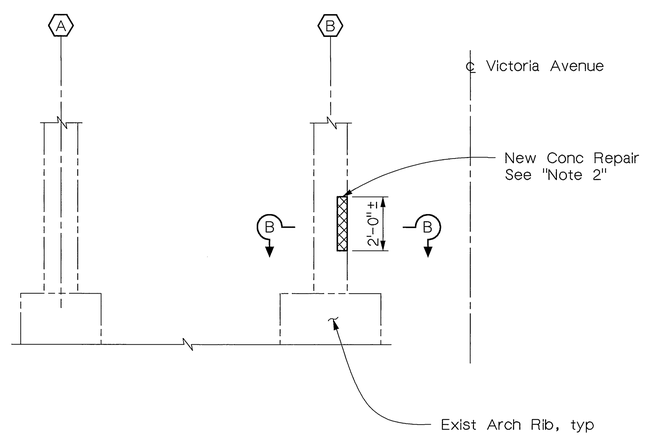

VIEW 12

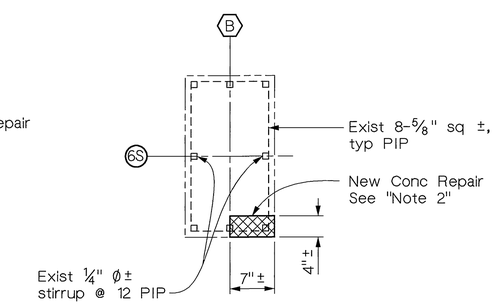

SECTION B-B
1" = 1'-0"

REPAIR

BENT 6S SPANDREL COLUMN
⅜" = 1'-0" (U.N.O.)

Notes:

1. See "Bridge Repair Details 1" sheet for details of bridge removal limits.
2. Final limits of concrete repair to match limits of concrete removed as described on "Bridge Repair Details 1" sheet.
3. Limits of concrete repairs shall be made flush with adjacent concrete surfaces and shall match existing structure geometry and architectural features including formwork.

LEGEND

Removal limits

Repair limits

Note:
The Contractor shall verify all controlling field dimensions before ordering or fabricating any material.

MIKE KATUSIAN DESIGN OVERSIGHT 12/20/02 SIGN OFF DATE	DESIGN	BY M. CHAR	CHECKED T.W. DUDLEY	CITY OF RIVERSIDE	G.J. NASCIMENTO PROJECT ENGINEER
	DETAILS	BY T. DAVID	CHECKED T.W. DUDLEY		
	QUANTITIES	BY N. MORCILLO	CHECKED Y. KIM		

ORIGINAL SCALE IN INCHES FOR REDUCED PLANS 0 1 2 3

CU
EA

BRIDGE NO. 56C-55
POST MILE/

VICTORIA AVENUE BRIDGE
SEISMIC RETROFIT
BRIDGE REPAIR DETAILS 6

DISREGARD PRINTS BEARING EARLIER REVISION DATES →

REVISION DATES (PRELIMINARY STAGE ONLY)

SHEET 52 OF 62

INDEXED 12-6-04 LH

DIST	COUNTY	ROUTE	POST MILES TOTAL PROJECT	SHEET NO.	TOTAL SHEETS
8	Riv	LOC			

REGISTERED CIVIL ENGINEER

12/20/02
PLANS APPROVAL DATE

REGISTERED PROFESSIONAL ENGINEER
T.W. DUDLEY
No. 39514
Exp. 12/31/05
CIVIL
STATE OF CALIFORNIA

CITY OF RIVERSIDE
DEPARTMENT OF PUBLIC WORKS
3900 Main Street
Riverside, California 92522

LIM & NASCIMENTO ENGINEERING
12 Mauchly, Bldg L
Irvine, California 92618

REMOVAL

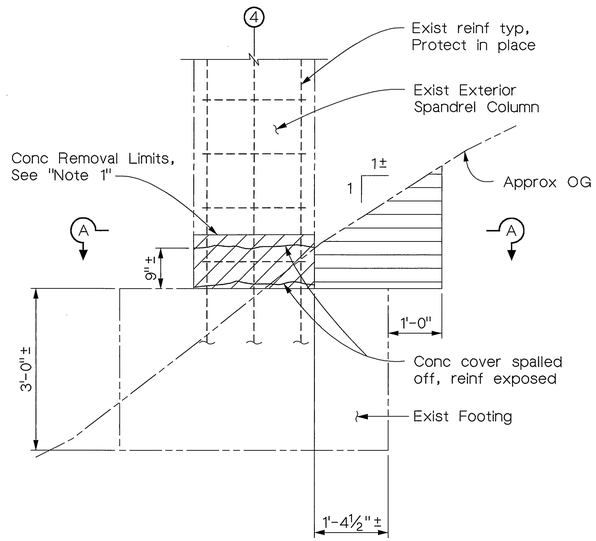

ELEVATION

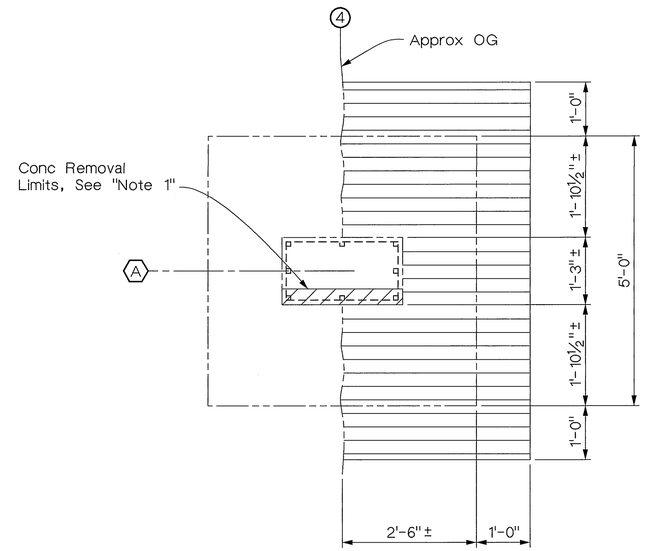

SECTION A-A

REPAIR

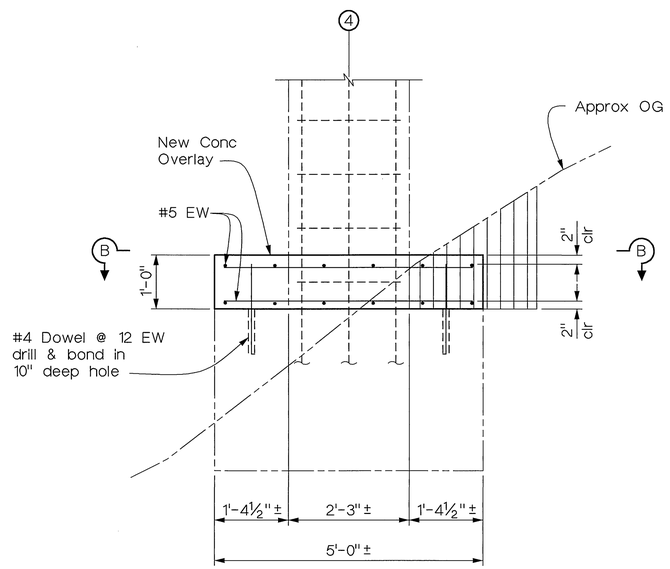

VIEW 13
¾" = 1'-0"

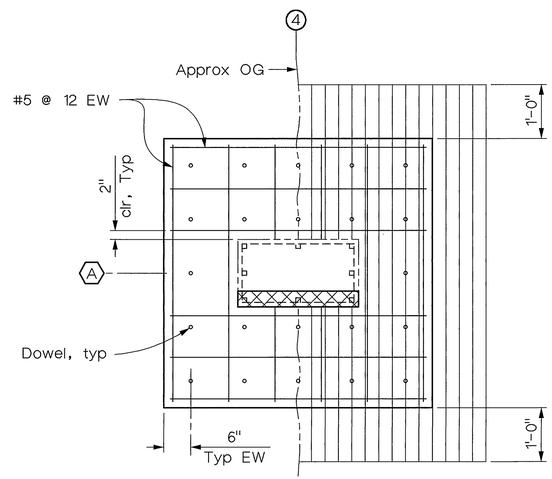

SECTION B-B
¾" = 1'-0"

Notes:

1. See "Bridge Repair Details 1" sheet for details at Bridge Removal Limits.
2. Hatching indicates limits of payment for excavation and backfill.

LEGEND

- Excavation limits, See "Note 2"
- Backfill limits, See "Note 2"
- Removal limits
- Replace limits

Note:
The Contractor shall verify all controlling field dimensions before ordering or fabricating any material.

VICTORIA AVENUE BRIDGE
SEISMIC RETROFIT
BRIDGE REPAIR DETAILS 7

MIKE KATUSIAN
DESIGN OVERSIGHT
12/20/02
SIGN OFF DATE

	BY	CHECKED
DESIGN	M. CHAR	T.W. DUDLEY
DETAILS	T. DAVID	T.W. DUDLEY
QUANTITIES	N. MORCILLO	Y. KIM

CITY OF RIVERSIDE

G.J. NASCIMENTO
PROJECT ENGINEER

BRIDGE NO. 56C-55
POST MILE

ORIGINAL SCALE IN INCHES FOR REDUCED PLANS 0 1 2 3

CU
EA

DISREGARD PRINTS BEARING EARLIER REVISION DATES →

REVISION DATES (PRELIMINARY STAGE ONLY)

SHEET 53 OF 62

INDEXED 12-6-04 JH

DIST	COUNTY	ROUTE	POST MILES TOTAL PROJECT	SHEET NO.	TOTAL SHEETS
8	Riv	LOC			

REGISTERED CIVIL ENGINEER

12/20/02
PLANS APPROVAL DATE

REGISTERED PROFESSIONAL ENGINEER T.W. DUDLEY No. 39514 Exp. 12/31/05 CIVIL STATE OF CALIFORNIA

CITY OF RIVERSIDE
DEPARTMENT OF PUBLIC WORKS
3900 Main Street
Riverside, California 92522

LIM & NASCIMENTO ENGINEERING
12 Mauchly, Bldg L
Irvine, California 92618

Notes:

1. All the existing Light Posts to be salvaged. Remove Light Posts before barrier demolition.
2. For Sections A-A, B-B, & C-C, & Details 1 & 2, see "Demolition Details 2" sheet.
3. Barrier removal may be started and completed in any order of the Contractor's option.
4. For Bridge removal sequence, excepting barrier removal, see "Demolition Sequence" sheet.

Notes: (cont)

5. The Contractor shall ensure that the portions of columns, piers, arch ribs, arch rib struts and utility support beams to remain in place are well protected from any damage during and after concrete removal operations. Should such damage occur, all work around the affected area shall be halted and the Engineer shall be notified immediately.

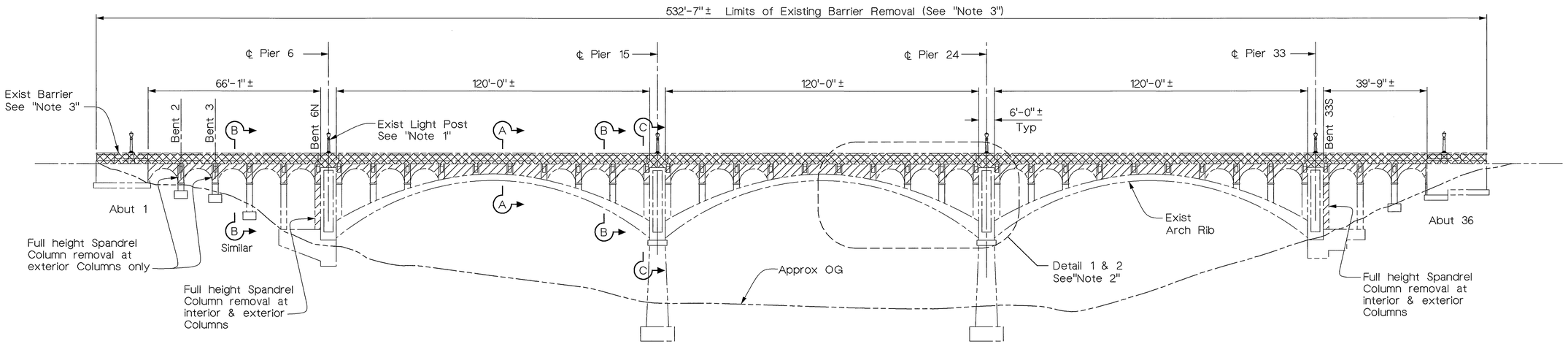

ELEVATION
1" = 20'

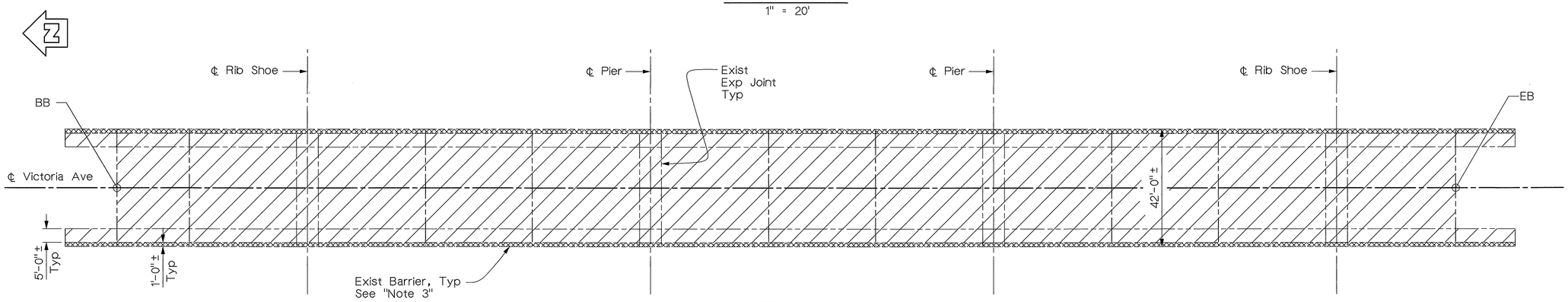

PLAN
1" = 20'

LEGEND

- Bridge Removal (See "Note 4")
- Barrier Removal

Note:
The Contractor shall verify all controlling field dimensions before ordering or fabricating any material.

MIKE KATUSIAN, DESIGN OVERSIGHT	DESIGN	BY M. CHAR	CHECKED T.W. DUDLEY
12/20/02, SIGN OFF DATE	DETAILS	BY N. MORCILLO	CHECKED T.W. DUDLEY
	QUANTITIES	BY N. MORCILLO	CHECKED Y. KIM

CITY OF RIVERSIDE

G.J. NASCIMENTO, PROJECT ENGINEER

BRIDGE NO. 56C-55
POST MILE

VICTORIA AVENUE BRIDGE
SEISMIC RETROFIT
DEMOLITION DETAILS 1

ORIGINAL SCALE IN INCHES FOR REDUCED PLANS 0 1 2 3

CU
EA

DISREGARD PRINTS BEARING EARLIER REVISION DATES →

REVISION DATES (PRELIMINARY STAGE ONLY)

SHEET 54 OF 62

INDEXED 12-6-04 LH

DIST	COUNTY	ROUTE	POST MILES TOTAL PROJECT	SHEET NO.	TOTAL SHEETS
8	Riv	LOC			

REGISTERED CIVIL ENGINEER

12/20/02
PLANS APPROVAL DATE

REGISTERED PROFESSIONAL ENGINEER T.W. DUDLEY No. 39514 Exp. 12/31/05 CIVIL STATE OF CALIFORNIA

CITY OF RIVERSIDE
DEPARTMENT OF PUBLIC WORKS
3900 Main Street
Riverside, California 92522

LIM & NASCIMENTO ENGINEERING
12 Mauchly, Bldg L
Irvine, California 92618

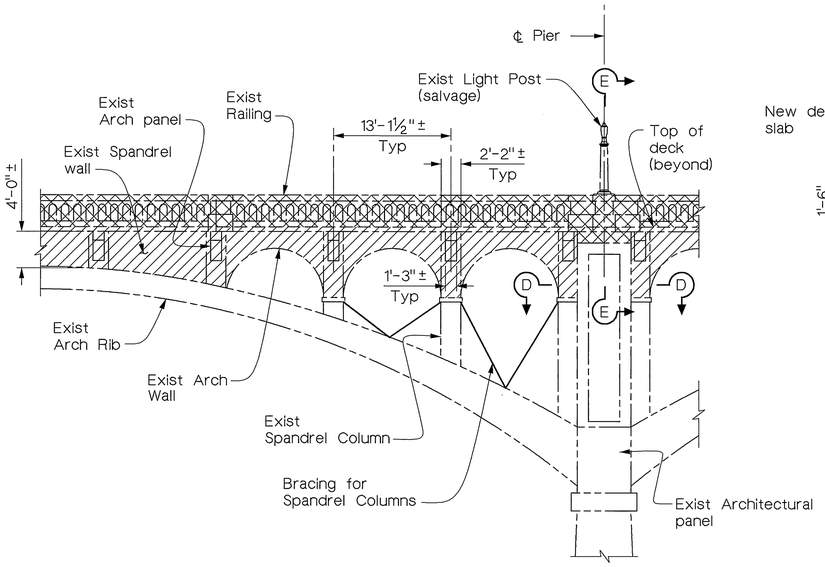

DETAIL 1 - EXTERIOR ELEVATION
⅛" = 1'-0"

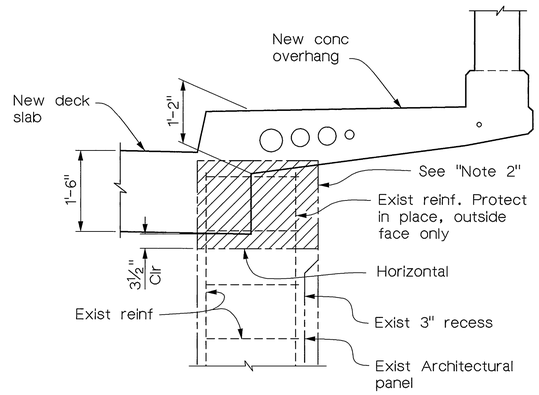

SECTION E-E
¾" = 1'-0"

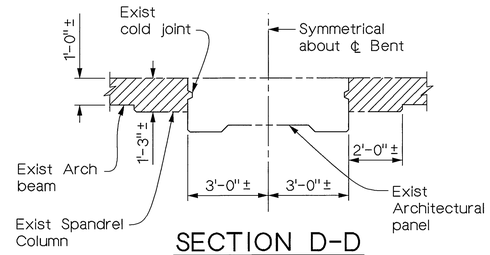

SECTION D-D
⅜" = 1'-0"

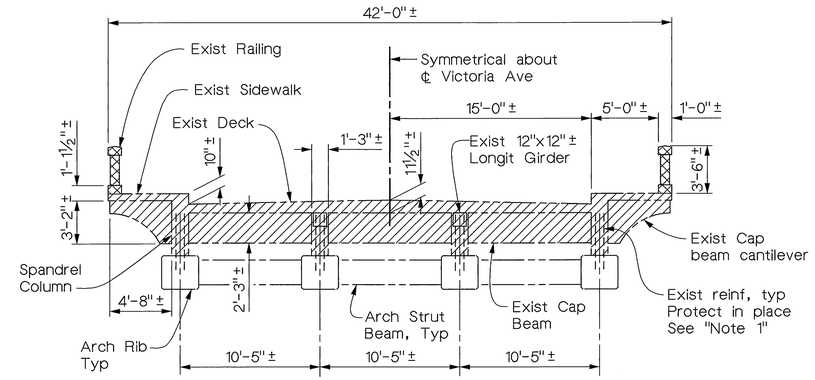

SECTION A-A
3/16" = 1'-0"

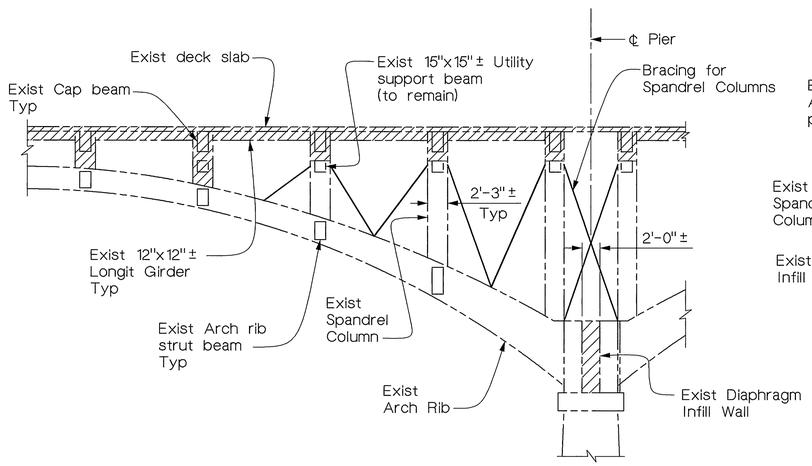

DETAIL 2 - INTERIOR ELEVATION
⅛" = 1'-0"

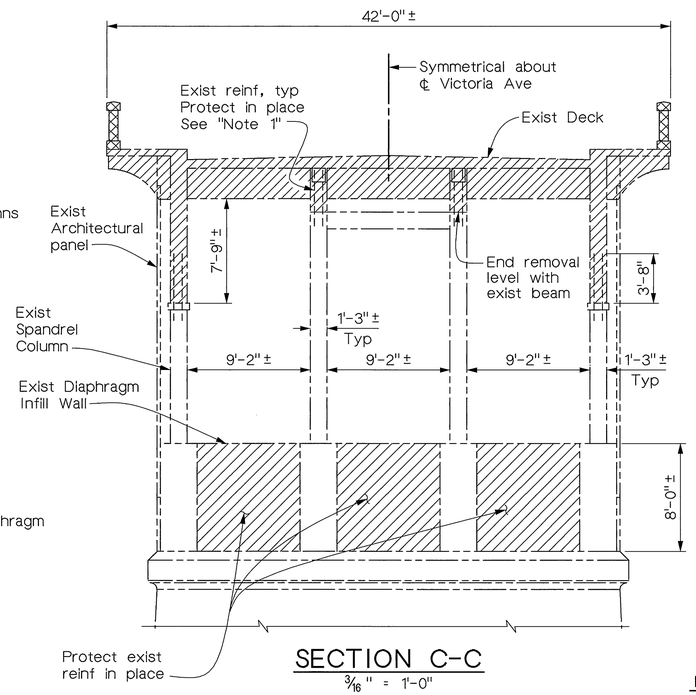

SECTION C-C
3/16" = 1'-0"

Note:
For information not shown see "Section A-A & B-B"

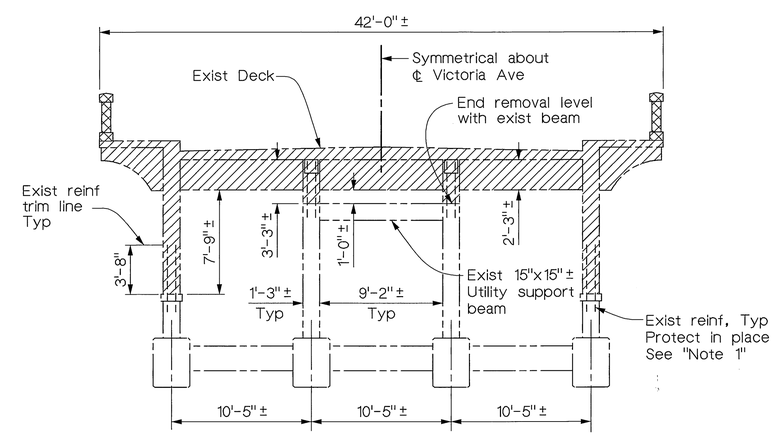

SECTION B-B
3/16" = 1'-0"

Note:
For information not shown see "Section A-A"

Notes:
1. For reinf details refer to "Spandrel Column Details" sheet.
2. For reconstruction of Architectural Panel refer to "Shear Wall Details 4" sheet.

LEGEND
- Bridge Removal
- Barrier Removal

Note:
The Contractor shall verify all controlling field dimensions before ordering or fabricating any material.

MIKE KATUSIAN
DESIGN OVERSIGHT
12/20/02
SIGN OFF DATE

	BY	CHECKED
DESIGN	M. CHAR	T.W. DUDLEY
DETAILS	R. ANDRASEK	T.W. DUDLEY
QUANTITIES	N. MORCILLO	Y. KIM

CITY OF RIVERSIDE

G.J. NASCIMENTO
PROJECT ENGINEER

BRIDGE NO. 56C-55
POST MILE

VICTORIA AVENUE BRIDGE
SEISMIC RETROFIT
DEMOLITION DETAILS 2

ORIGINAL SCALE IN INCHES FOR REDUCED PLANS 0 1 2 3

CU
EA

DISREGARD PRINTS BEARING EARLIER REVISION DATES →

REVISION DATES (PRELIMINARY STAGE ONLY)

SHEET 55 OF 62

INDEXED 12-6-04 YH

DIST	COUNTY	ROUTE	POST MILES TOTAL PROJECT	SHEET NO.	TOTAL SHEETS
8	Riv	LOC			

REGISTERED CIVIL ENGINEER

12/20/02
PLANS APPROVAL DATE

REGISTERED PROFESSIONAL ENGINEER T.W. DUDLEY No. 39514 Exp. 12/31/05 CIVIL STATE OF CALIFORNIA

CITY OF RIVERSIDE
DEPARTMENT OF PUBLIC WORKS
3900 Main Street
Riverside, California 92522

LIM & NASCIMENTO ENGINEERING
12 Mauchly, Bldg L
Irvine, California 92618

Notes:

1. For Barrier removal, see "Demolition Details 1" sheet.
2. Bridge removal, excepting barrier removal, shall be started at the center of Arch Span 2 (Stage 1) and proceeded towards Abutments on either side simultaneously as shown in the demolition sequence.
3. Early demolition of portions of the bridge deck near Pier 15 may facilitate the installation of CIDH piles. (See "Footing Retrofit Details 1" sheet for further information).
4. The contractor shall submit a demolition plan addendum for the engineer's approval if early demolition near Pier 15 is desired.

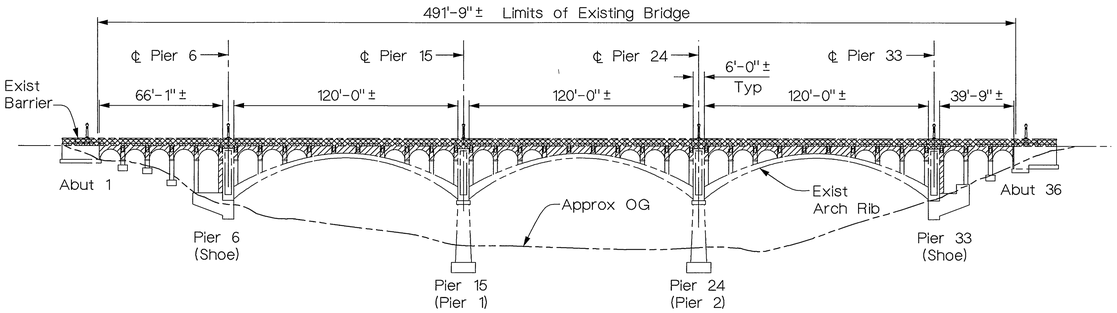

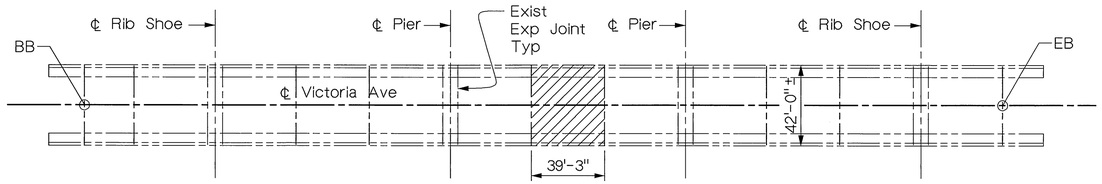

STAGE 1

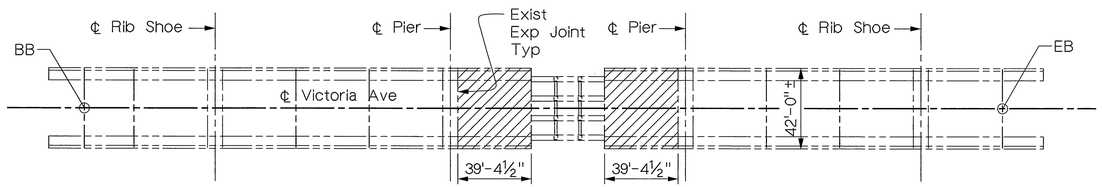

STAGE 2

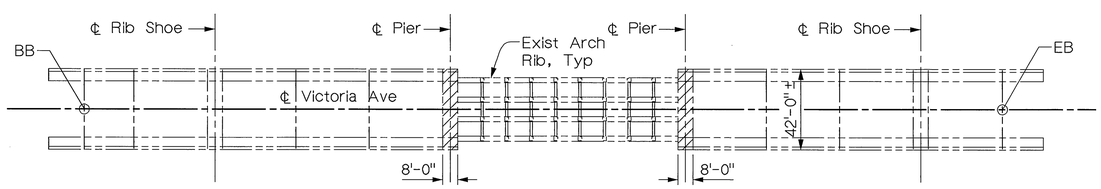

STAGE 3

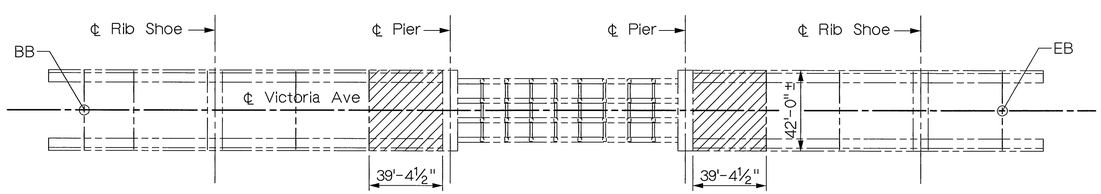

STAGE 4

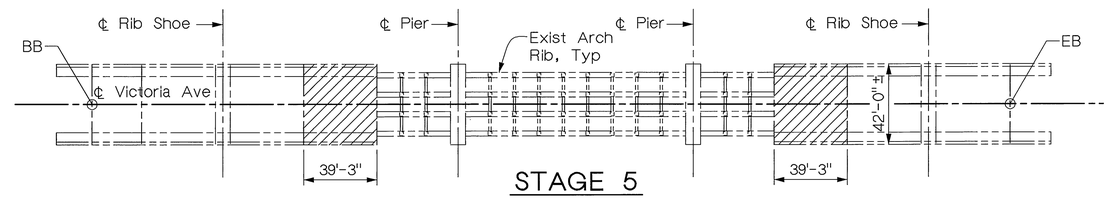

STAGE 5

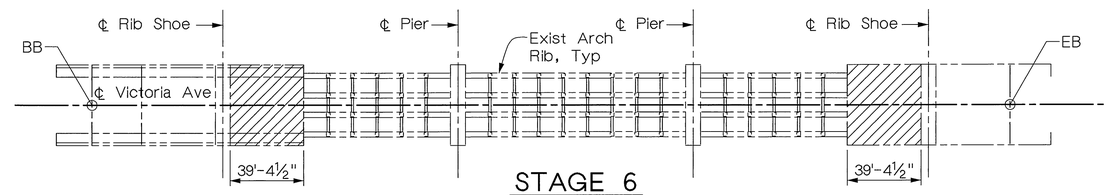

STAGE 6

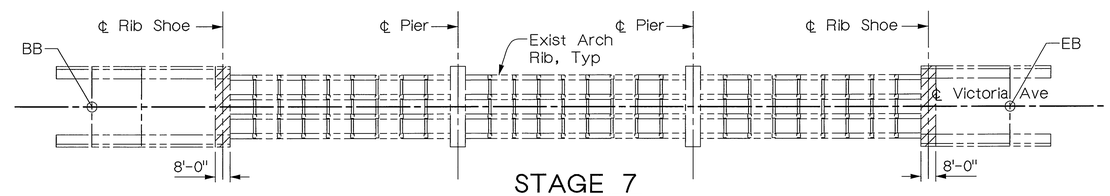

STAGE 7

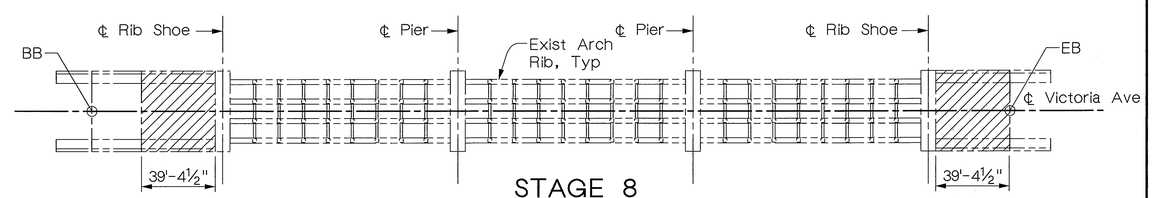

STAGE 8

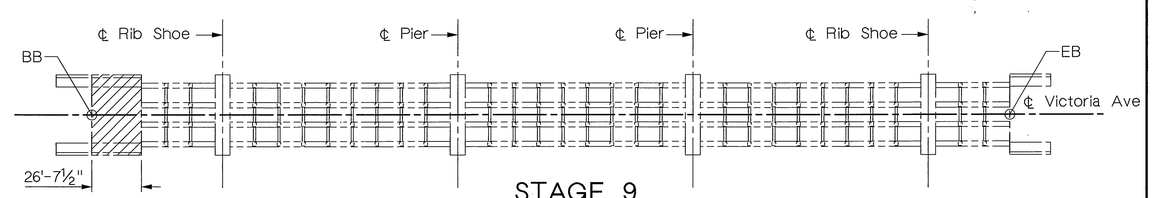

STAGE 9

Note:
The Contractor shall verify all controlling field dimensions before ordering or fabricating any material.

LEGEND

Bridge Removal

MIKE KATUSIAN
DESIGN OVERSIGHT
12/20/02
SIGN OFF DATE

	BY	CHECKED
DESIGN	M. CHAR	T.W. DUDLEY
DETAILS	R. ANDRASEK	T.W. DUDLEY
QUANTITIES	N. MORCILLO	Y. KIM

CITY OF RIVERSIDE

G.J. NASCIMENTO
PROJECT ENGINEER

ORIGINAL SCALE IN INCHES FOR REDUCED PLANS 0 1 2 3

CU
EA

BRIDGE NO. 56C-55
POST MILE

DISREGARD PRINTS BEARING EARLIER REVISION DATES →

REVISION DATES (PRELIMINARY STAGE ONLY)

SHEET 56 OF 62

VICTORIA AVENUE BRIDGE
SEISMIC RETROFIT
DEMOLITION SEQUENCE

INDEXED 12-6-04 GH

DIST	COUNTY	ROUTE	POST MILES TOTAL PROJECT	SHEET NO.	TOTAL SHEETS
8	Riv	LOC			

REGISTERED CIVIL ENGINEER

12/20/02
PLANS APPROVAL DATE

REGISTERED PROFESSIONAL ENGINEER T.W. DUDLEY No. 39514 Exp. 12/31/05 CIVIL STATE OF CALIFORNIA

CITY OF RIVERSIDE
DEPARTMENT OF PUBLIC WORKS
3900 Main Street
Riverside, California 92522

LIM & NASCIMENTO ENGINEERING
12 Mauchly, Bldg L
Irvine, California 92618

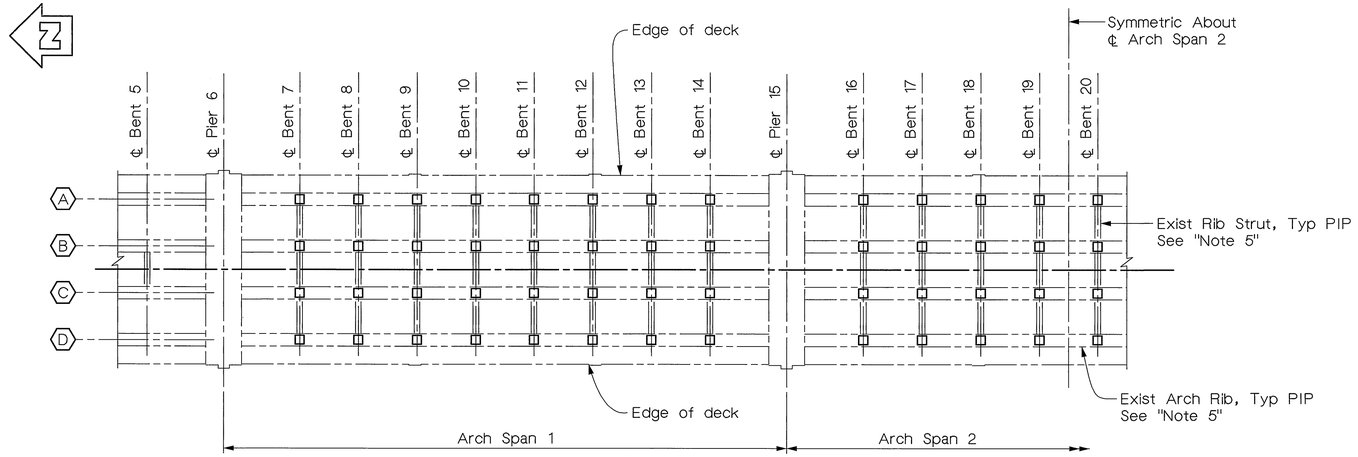

BOTTOM VIEW LOOKING UP AT ARCH RIB STRUTS

1/16" = 1'-0"

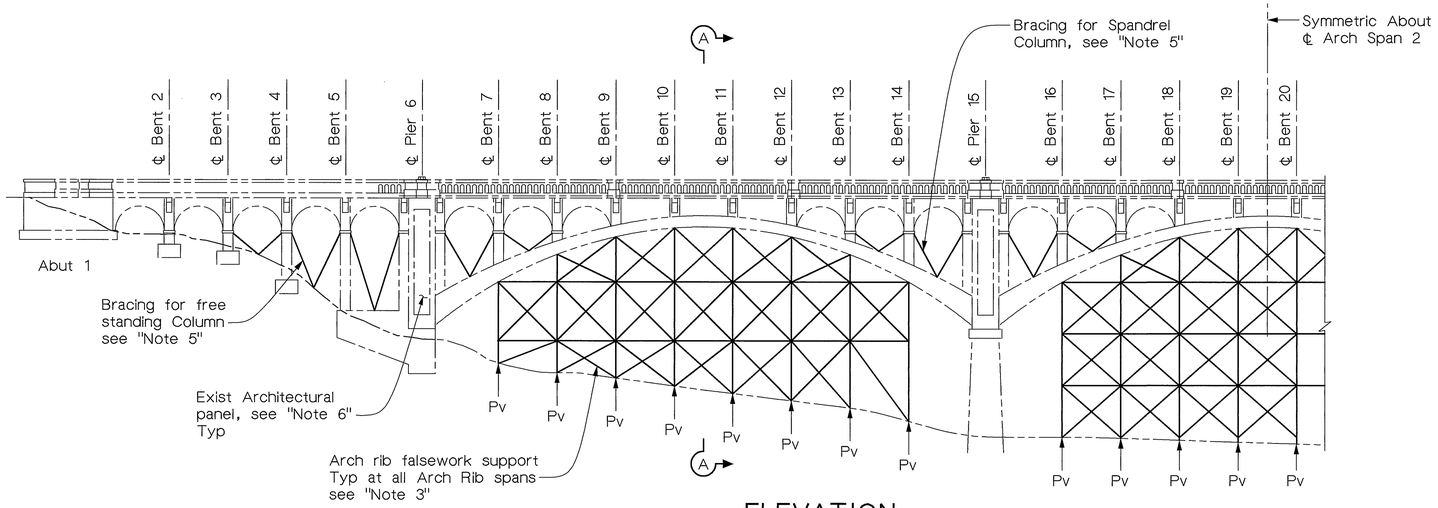

ELEVATION

1/16" = 1'-0"

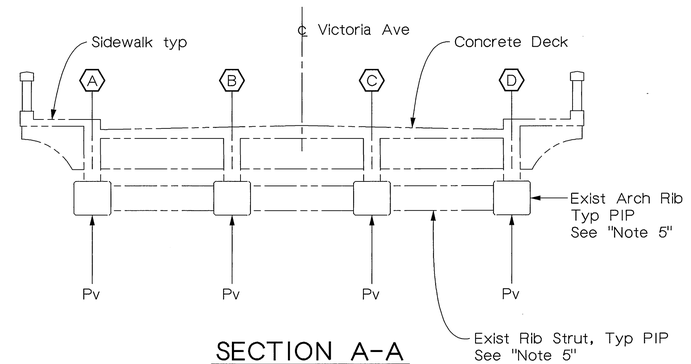

SECTION A-A

3/16" = 1'-0"

Notes:

1. Support requirements are symmetric about each arch rib span.
2. Longitudinal and Transverse restraints shall be developed to resist reversible forces.
3. Falsework detail shown are schematic only, the Contractor is required to develop all falsework details independently, and submit for review and approval. Falsework support settlement shall be monitored and any necessary height adjustment to the Arch support points shall be made.
4. Existing Arch Ribs and Rib Struts shall be protected from falling debris during demolition and construction operations.
5. Lateral bracing shall be provided for free standing columns and spandrel columns below the removal limits.
6. The Contractor shall protect existing Architectural panel in place during construction of Shear wall.

Minimum Arch Rib Vertical Support Requirements (Pv)

Note: Minimum vertical support for arch ribs at column bent intersections shown in Kips.

Spandrel Column Bent	7	8	9	10	11	12	13	14		16	17	18	19	20	21	22	23		25	26	27	28	29	30	31	32
Arch Rib																										
A	65	60	55	55	55	55	60	65		65	60	55	55	55	55	60	65		65	60	55	55	55	55	60	65
B	55	45	45	40	40	45	45	55		55	45	45	40	40	45	45	55		55	45	45	40	40	45	45	55
C	55	45	45	40	40	45	45	55		55	45	45	40	40	45	45	55		55	45	45	40	40	45	45	55
D	65	60	55	55	55	55	60	65		65	60	55	55	55	55	60	65		65	60	55	55	55	55	60	65

LEGEND

□ Arch Rib Support Location

Pv Vertical Arch Rib support

Note:
The Contractor shall verify all controlling field dimensions before ordering or fabricating any material.

MIKE KATUSIAN
DESIGN OVERSIGHT
12/20/02
SIGN/OFF DATE

	BY	CHECKED
DESIGN	M. CHAR	T.W. DUDLEY
DETAILS	T. DAVID	T.W. DUDLEY
QUANTITIES	N. MORCILLO	Y. KIM

CITY OF RIVERSIDE

G.J. NASCIMENTO
PROJECT ENGINEER

BRIDGE NO. 56C-55
POST MILE

VICTORIA AVENUE BRIDGE
SEISMIC RETROFIT
FALSEWORK DETAILS

ORIGINAL SCALE IN INCHES FOR REDUCED PLANS 0 1 2 3

CU
EA

DISREGARD PRINTS BEARING EARLIER REVISION DATES →

REVISION DATES (PRELIMINARY STAGE ONLY)

SHEET 57 OF 62

INDEXED 12-6-04 GH

DIST	COUNTY	ROUTE	POST MILES TOTAL PROJECT	SHEET NO.	TOTAL SHEETS
8	Riv	LOC			

REGISTERED CIVIL ENGINEER

12/20/02
PLANS APPROVAL DATE

REGISTERED PROFESSIONAL ENGINEER T.W. DUDLEY No. 39514 Exp. 12/31/05 CIVIL STATE OF CALIFORNIA

CITY OF RIVERSIDE
DEPARTMENT OF PUBLIC WORKS
3900 Main Street
Riverside, California 92522

LIM & NASCIMENTO ENGINEERING
12 Mauchly, Bldg L
Irvine, California 92618

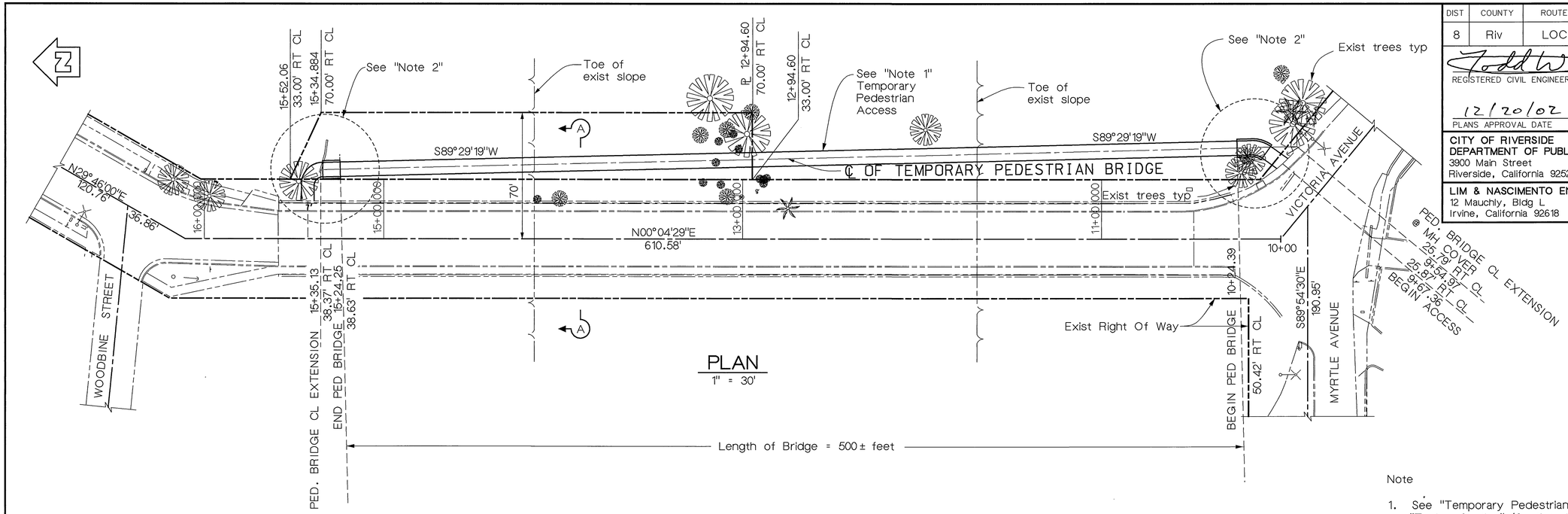

PLAN
1" = 30'

Note

1. See "Temporary Pedestrian Access 2" sheet for "Typical Section" (Section A-A).

2. See "Temporary Pedestrian Access 2" sheet for "South End Approach Detail" or "North End Approach Detail"

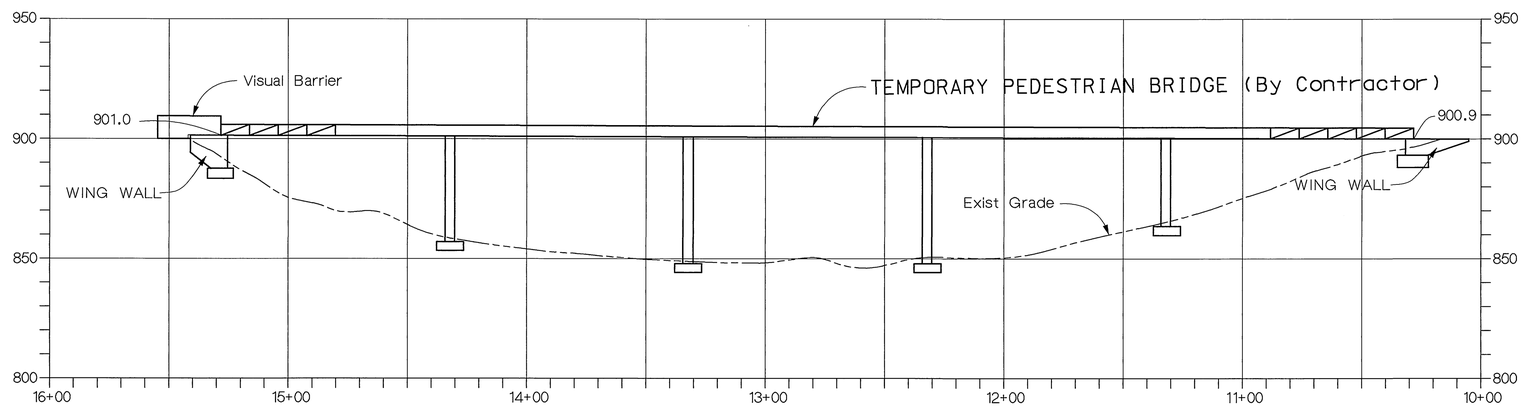

ELEVATION
SCALE
HORIZ: 1"= 30'
VERT : 1"= 30'

General Notes:

1. Temporary Pedestrian Access shall be constructed to meet all applicable ADA requirements.

2. The Contractor shall coordinate construction of the Temporary Pedestrian Access with the foundation retrofit construction required at Pier 15.

3. Contractor shall maintain Temporary Pedestrian Access in place for the duration of the Victoria Avenue Bridge closure.

4. The contractor shall be responsible for all details of Temporary Pedestrian Access design, erection, maintenance, removal and any required restoration or clean up operations.

Note:
The Contractor shall verify all controlling field dimensions before ordering or fabricating any material.

MIKE KATUSIAN
DESIGN OVERSIGHT
12/20/02
SIGN OFF DATE

	BY	CHECKED
DESIGN	M. CHAR	T.W. DUDLEY
DETAILS	T. DAVID	T.W. DUDLEY
QUANTITIES	N. MORCILLO	Y. KIM

CITY OF RIVERSIDE

G.J. NASCIMENTO
PROJECT ENGINEER

BRIDGE NO. 56C-55
POST MILE

VICTORIA AVENUE BRIDGE
SEISMIC RETROFIT
TEMPORARY PEDESTRIAN ACCESS 1

ORIGINAL SCALE IN INCHES FOR REDUCED PLANS 0 1 2 3

CU
EA

DISREGARD PRINTS BEARING EARLIER REVISION DATES →

REVISION DATES (PRELIMINARY STAGE ONLY)

SHEET 58 OF 62

INDEXED 12-6-04 GH

DIST	COUNTY	ROUTE	POST MILES TOTAL PROJECT	SHEET NO.	TOTAL SHEETS
8	Riv	LOC			

REGISTERED CIVIL ENGINEER

12/20/02
PLANS APPROVAL DATE

PROFESSIONAL ENGINEER — REGISTERED — T.W. DUDLEY — No. 39514 — Exp. 12/31/05 — CIVIL — STATE OF CALIFORNIA

CITY OF RIVERSIDE
DEPARTMENT OF PUBLIC WORKS
3900 Main Street
Riverside, California 92522

LIM & NASCIMENTO ENGINEERING
12 Mauchly, Bldg L
Irvine, California 92618

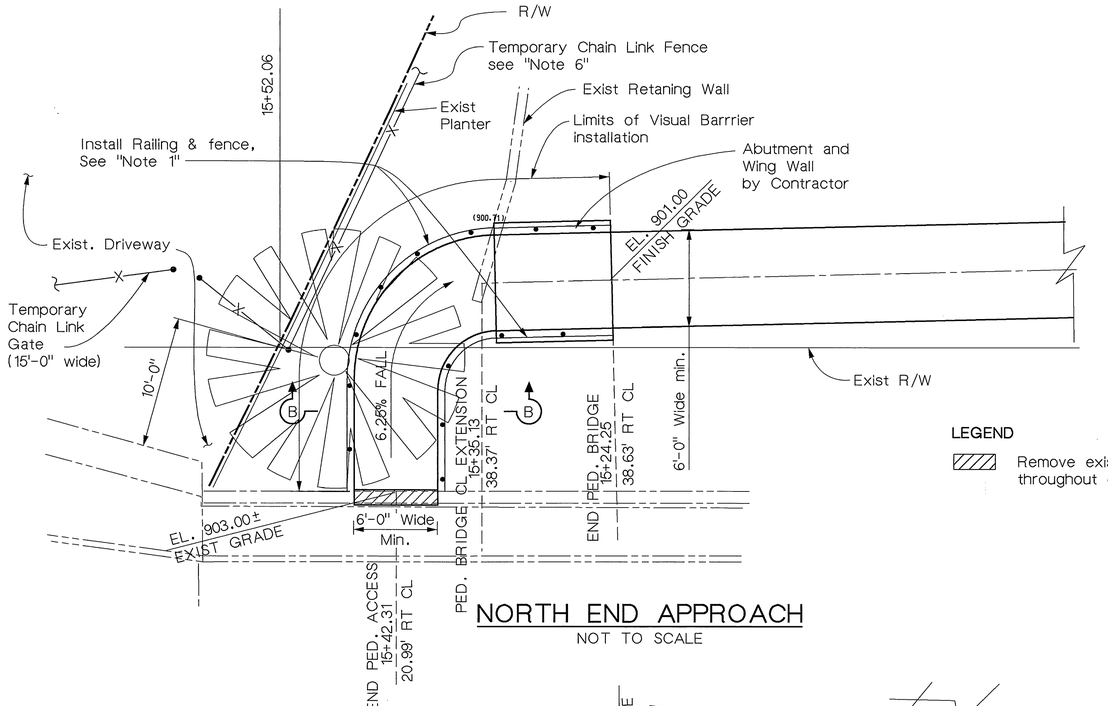

NORTH END APPROACH
NOT TO SCALE

LEGEND

Remove exist. railing for access. maintain throughout construction

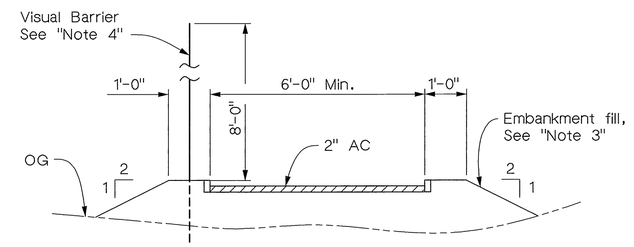

SECTION B-B
NO SCALE

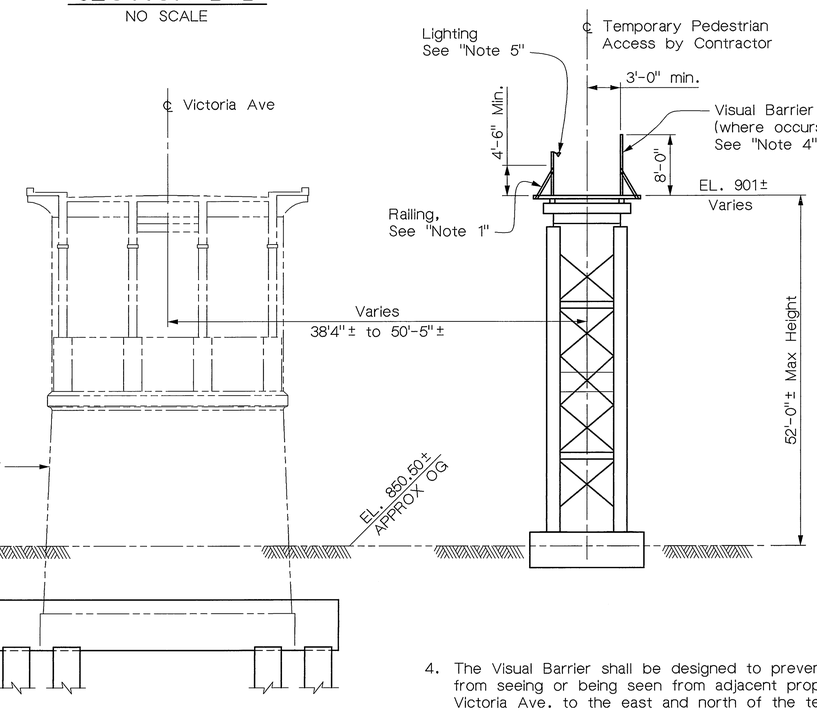

TYPICAL SECTION
SECTION A-A
3/32" = 1'-0"

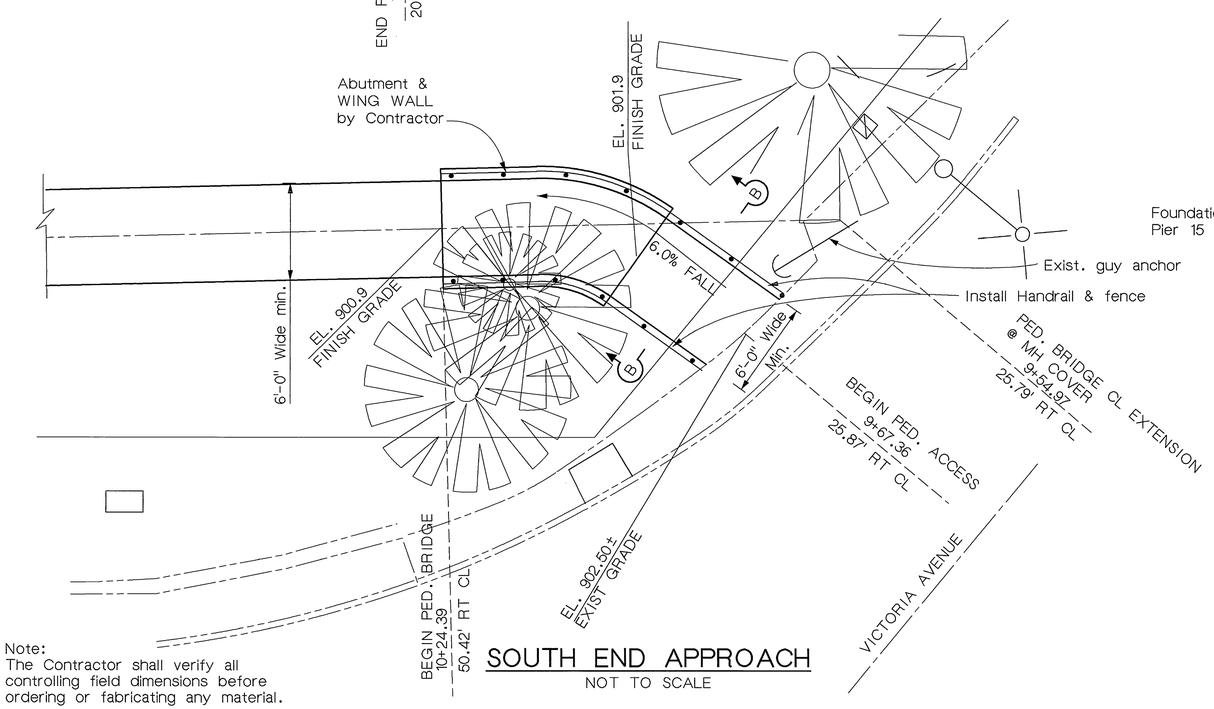

SOUTH END APPROACH
NOT TO SCALE

Note:
The Contractor shall verify all controlling field dimensions before ordering or fabricating any material.

Notes:

1. Railing provided shall satisfy all requirements for bicycle railing as described in Caltrans Bridge Design specifications.
2. Contractor shall provide lighting for the entire length of the Pedestrian Access Structure.The minimum acceptable lighting shall be determined by the Engineer.
3. Embankment fills shall be compacted in accordance with the Special Provisions.
4. The Visual Barrier shall be designed to prevent pedestrians from seeing or being seen from adjacent property at 4904 Victoria Ave. to the east and north of the temporary pedestrian access, from the end of the Pedestrian Bridge to the end of the pedestrian access. The design of the Visual Barrier shall satisfy all wind loading requirements as described in Caltrans' Bridge Design Specifications.
5. The contractor shall provide a lighting system for the temporary pedestrian access. Lighting shall provide the equivalent of a 40 watt bulb placed at 15' OC, the full length of the structure. Contractor shall maintain the system at all times the access structure is open to pedestrian traffic.
6. See "Fencing Details And Slope Restoration" sheet for chain link fencing layout.

VICTORIA AVENUE BRIDGE
SEISMIC RETROFIT
TEMPORARY PEDESTRIAN ACCESS 2

MIKE KATUSIAN
DESIGN OVERSIGHT
12/20/02
SIGN OFF DATE

	BY	CHECKED
DESIGN	M. CHAR	T.W. DUDLEY
DETAILS	T. DAVID	T.W. DUDLEY
QUANTITIES	N. MORCILLO	Y. KIM

CITY OF RIVERSIDE

G.J. NASCIMENTO
PROJECT ENGINEER

BRIDGE NO. 56C-55
POST MILE

ORIGINAL SCALE IN INCHES FOR REDUCED PLANS 0 1 2 3

CU
EA

DISREGARD PRINTS BEARING EARLIER REVISION DATES →

REVISION DATES (PRELIMINARY STAGE ONLY)

SHEET 59 OF 62

INDEXED 12-6-04 KH

DIST	COUNTY	ROUTE	POST MILES TOTAL PROJECT	SHEET NO.	TOTAL SHEETS
8	RIV	LOC			

Michael D. Reader
GEOTECHNICAL PROFESSIONAL

12/20/02
PLANS APPROVAL DATE

REGISTERED PROFESSIONAL ENGINEER — MICHAEL READER — No. C44918 — Exp. 03/31/06 — CIVIL — STATE OF CALIFORNIA

THE LKR GROUP
2341 205th. Street, Suite 103
Torrance, California 90501
Project No.: 97-1023

Laboratory Testing

- (DS) Direct Shear
- (SS) Soluble Sulfate
- (SC) Soluble Chloride
- (R) R- Value
- (C) Composition Test
- N. S. R. = No sample recovery
- OVM580B Gas Readings

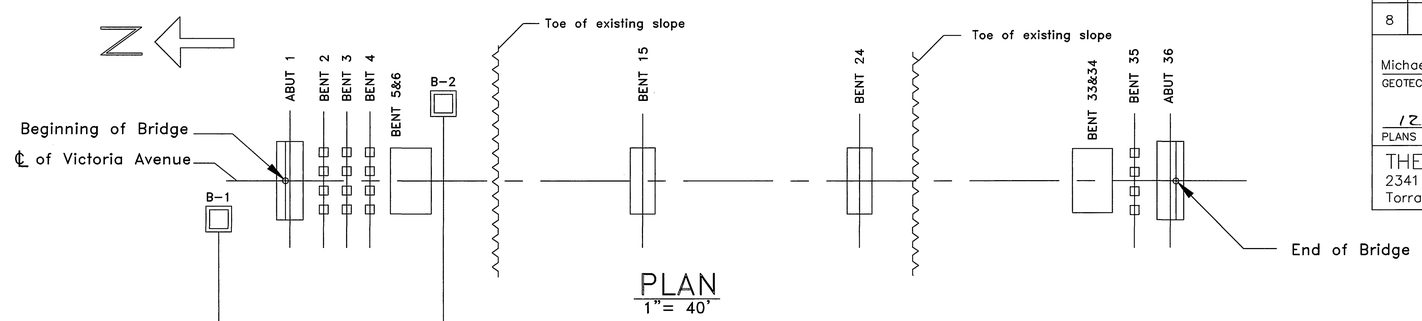

PLAN
1" = 40'

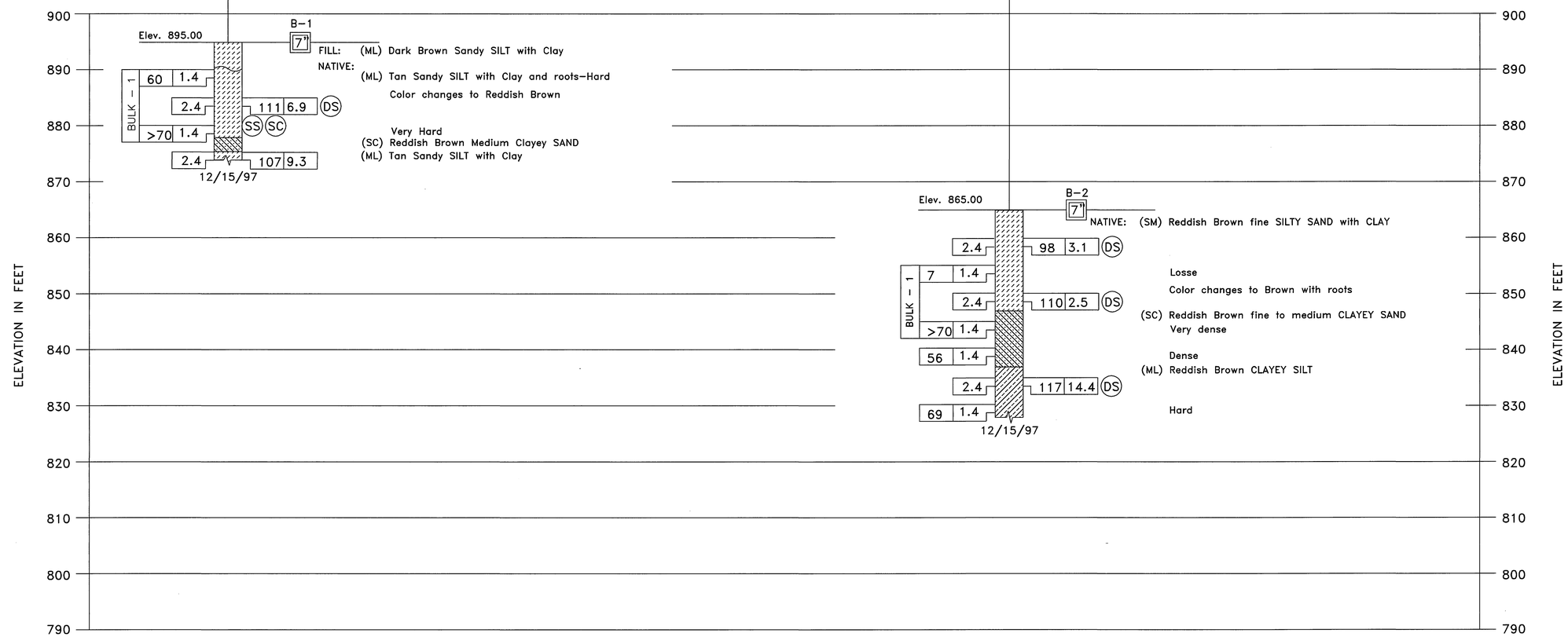

PROFILE
Vertical: 1" = 10"
Horizontal: 1" = 40'

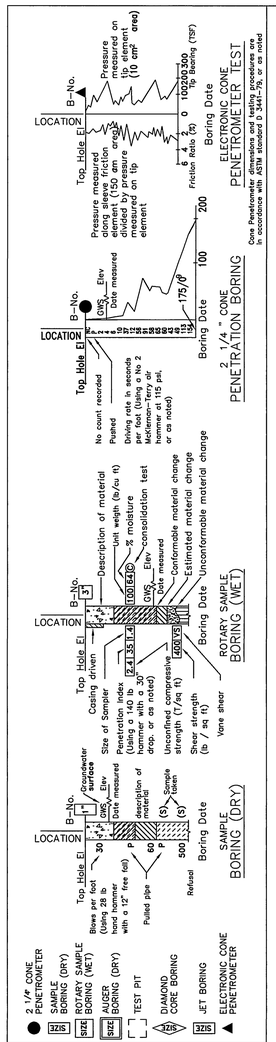

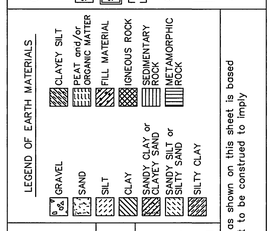

CONSISTENCY CLASSIFICATION FOR SOILS
According to the Standard Penetration Test

Penetration Index (Blows/Ft.)	Granular	Cohesive
0-4	Very loose	Very soft
5-9	Loose	Soft
10-19	Slightly compact	Stiff
20-34	Compact	Very stiff
35-69	Dense	Hard
>70	Very dense	Very hard

NOTE: Classification of earth material as shown on this sheet is based upon field inspection and is not to be construed to imply mechanical analysis

MIKE KATUSIAN, DESIGN OVERSIGHT	DRAWN BY	L. NGUYEN	M. CHI, FIELD INVESTIGATOR	PREPARED FOR THE CITY OF RIVERSIDE	G. J. NASCIMENTO, PROJECT ENGINEER
12/20/02, SIGN OFF DATE	CHECKED BY	M. READER	DATE 12/97		

THE LKR GROUP

ORIGINAL SCALE IN INCHES FOR REDUCED PLANS 0 1 2 3

CU
EA

BRIDGE NO. 56c-55
POST MILE

VICTORIA AVENUE BRIDGE
SEISMIC RETROFIT
LOG OF TEST BORINGS 1

DISREGARD PRINTS BEARING EARLIER REVISION DATES →
REVISION DATES (PRELIMINARY STAGE ONLY)

SHEET 60 OF 62

INDEXED 12-6-04 LFH

DIST	COUNTY	ROUTE	POST MILES TOTAL PROJECT	SHEET NO.	TOTAL SHEETS
8	RIV	LOC			

Michael D. Reader
GEOTECHNICAL PROFESSIONAL

12/20/02
PLANS APPROVAL DATE

REGISTERED PROFESSIONAL ENGINEER — MICHAEL READER — No. C44918 — Exp. 03/31/06 — CIVIL — STATE OF CALIFORNIA

THE LKR GROUP
2341 205th. Street, Suite 103
Torrance, California 90501
Project No.: 97-1023

Laboratory Testing

- (DS) Direct Shear
- (SS) Soluble Sulfate
- (SC) Soluble Chloride
- (R) R- Value
- (C) Composition Test
- N. S. R. = No sample recovery
- OVM580B Gas Readings

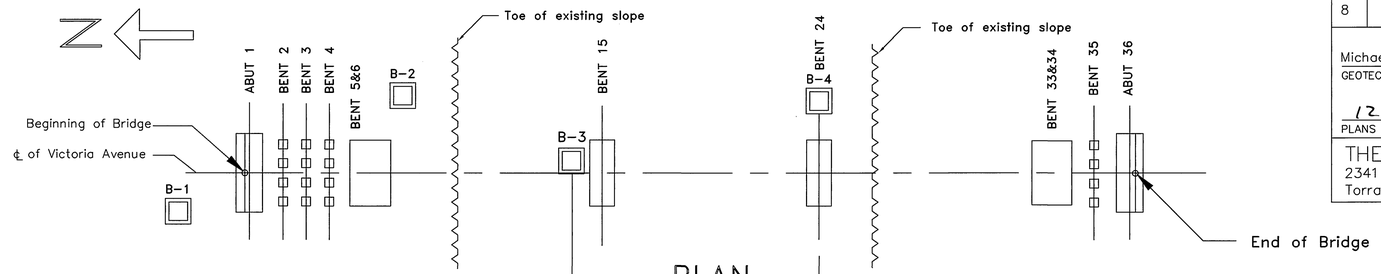

PLAN
1"= 40'

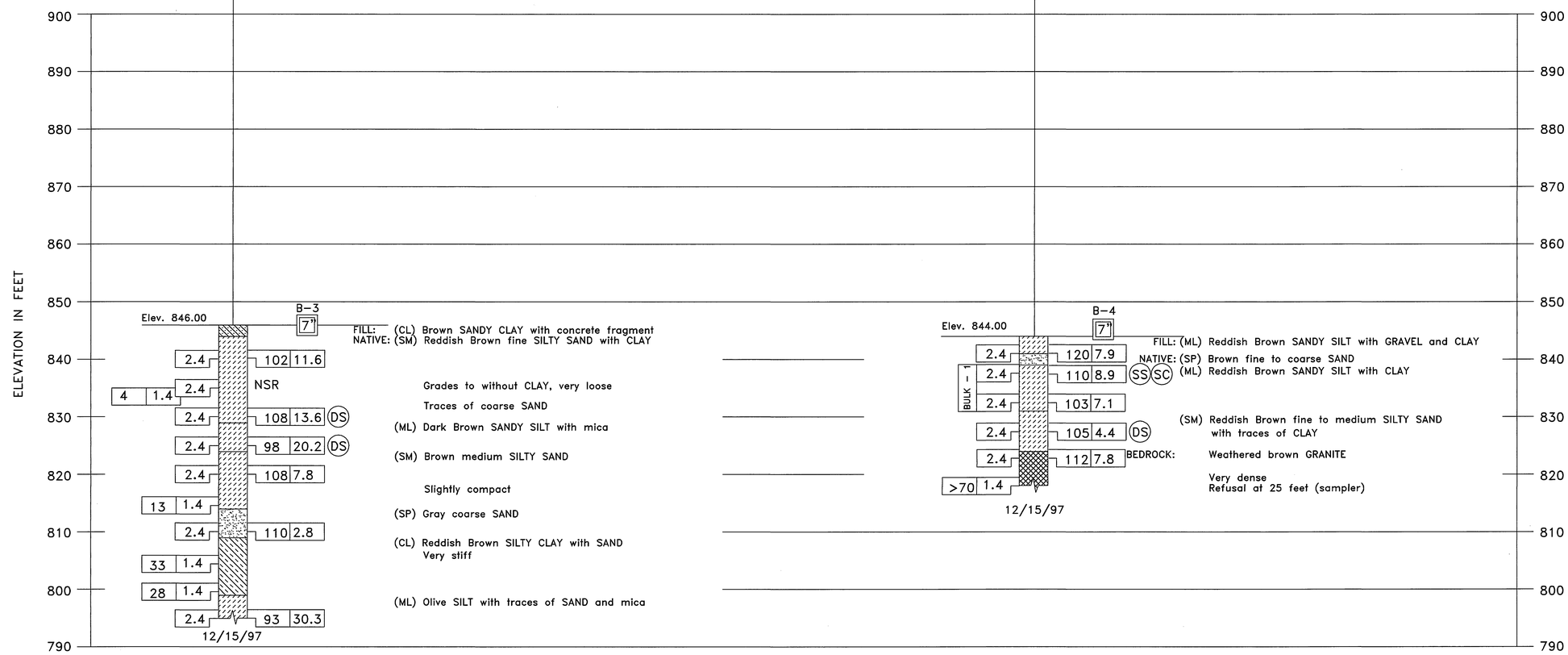

PROFILE
Vertical: 1" = 10"
Horizontal: 1" = 40'

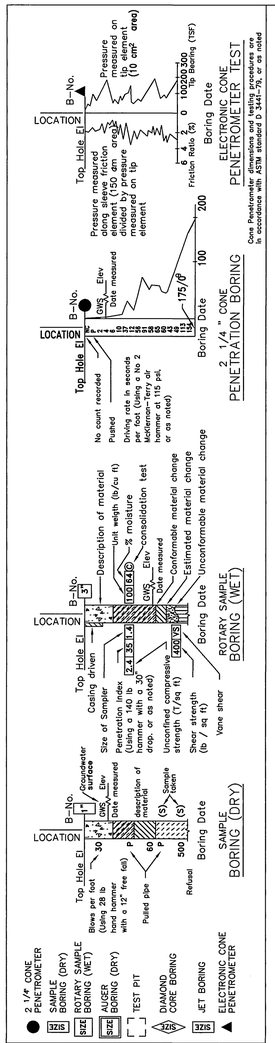

MIKE KATUSIAN DESIGN OVERSIGHT 12/20/02 SIGN OFF DATE	DRAWN BY CHECKED BY	L. NGUYEN M. READER	M. CHI FIELD INVESTIGATOR DATE 12/97	THE LKR GROUP	PREPARED FOR THE CITY OF RIVERSIDE

G. J. NASCIMENTO
PROJECT ENGINEER

BRIDGE NO. 56c-55
POST MILE

VICTORIA AVENUE BRIDGE
SEISMIC RETROFIT
LOG OF TEST BORINGS 2

ORIGINAL SCALE IN INCHES FOR REDUCED PLANS 0 1 2 3

CU
EA

DISREGARD PRINTS BEARING EARLIER REVISION DATES

REVISION DATES (PRELIMINARY STAGE ONLY)

SHEET 61 OF 62

INDEXED 12-6-04 GH

DIST	COUNTY	ROUTE	POST MILES TOTAL PROJECT	SHEET NO.	TOTAL SHEETS
8	RIV	LOC			

Michael D. Reader
GEOTECHNICAL PROFESSIONAL

12/20/02
PLANS APPROVAL DATE

REGISTERED PROFESSIONAL ENGINEER — MICHAEL READER — No. C44918 — Exp. 03/31/06 — CIVIL — STATE OF CALIFORNIA

THE LKR GROUP
2341 205th. Street, Suite 103
Torrance, California 90501

Project No.: 97-1023

Laboratory Testing

- (DS) Direct Shear
- (SS) Soluble Sulfate
- (SC) Soluble Chloride
- (R) R- Value
- (C) Composition Test
- N. S. R. = No sample recovery
- OVM580B Gas Readings

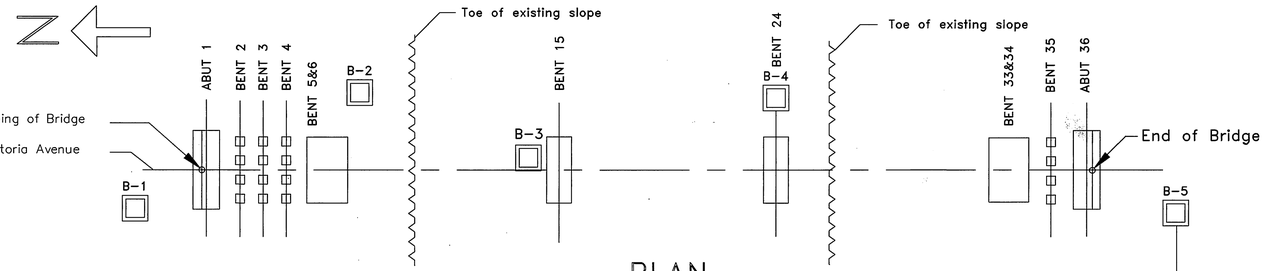

PLAN
1" = 40'

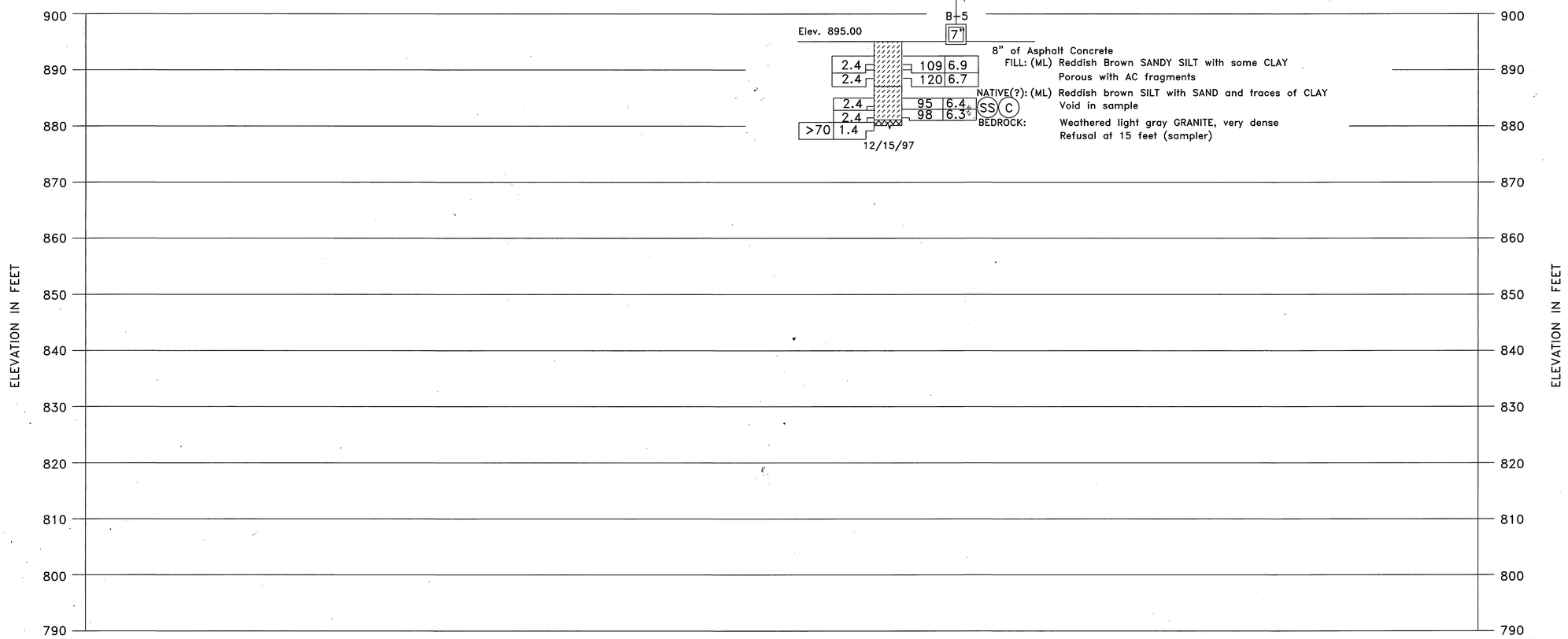

PROFILE
Vertical: 1" = 10"
Horizontal: 1" = 40'

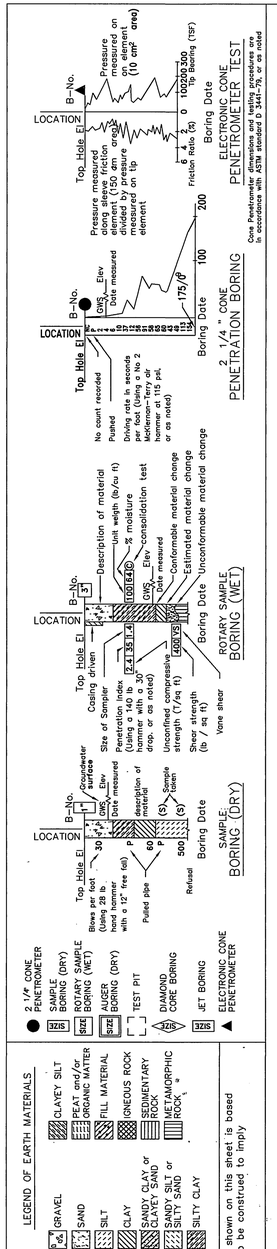

MIKE KATUSIAN DESIGN OVERSIGHT 12/20/02 SIGN OFF DATE	DRAWN BY	L. NGUYEN	M. CHI FIELD INVESTIGATOR DATE 12/97	THE LKR GROUP	PREPARED FOR THE CITY OF RIVERSIDE
	CHECKED BY	M. READER			

G. J. NASCIMENTO
PROJECT ENGINEER

BRIDGE NO. 56c-55
POST MILE

VICTORIA AVENUE BRIDGE
SEISMIC RETROFIT
LOG OF TEST BORINGS 3

ORIGINAL SCALE IN INCHES FOR REDUCED PLANS 0 1 2 3

CU
EA

DISREGARD PRINTS BEARING EARLIER REVISION DATES →

REVISION DATES (PRELIMINARY STAGE ONLY)

SHEET 62 OF 62

INDEXED 12-6-04 KH