STREET IMPROVEMENT PLANS

CITY OF RIVERSIDE, CALIFORNIA

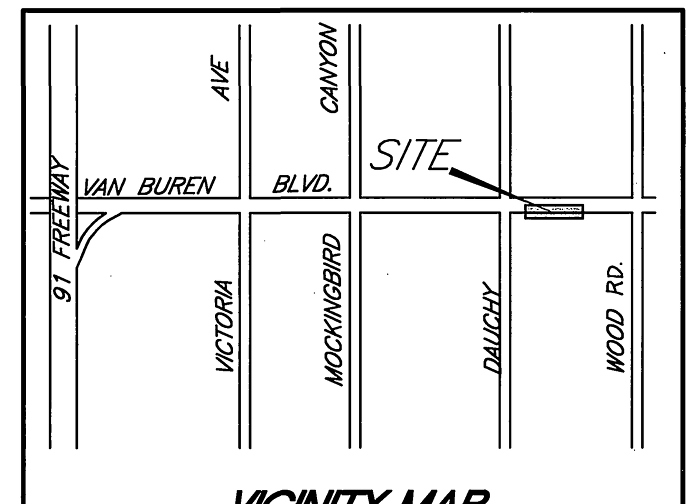

VICINITY MAP

NOT TO SCALE

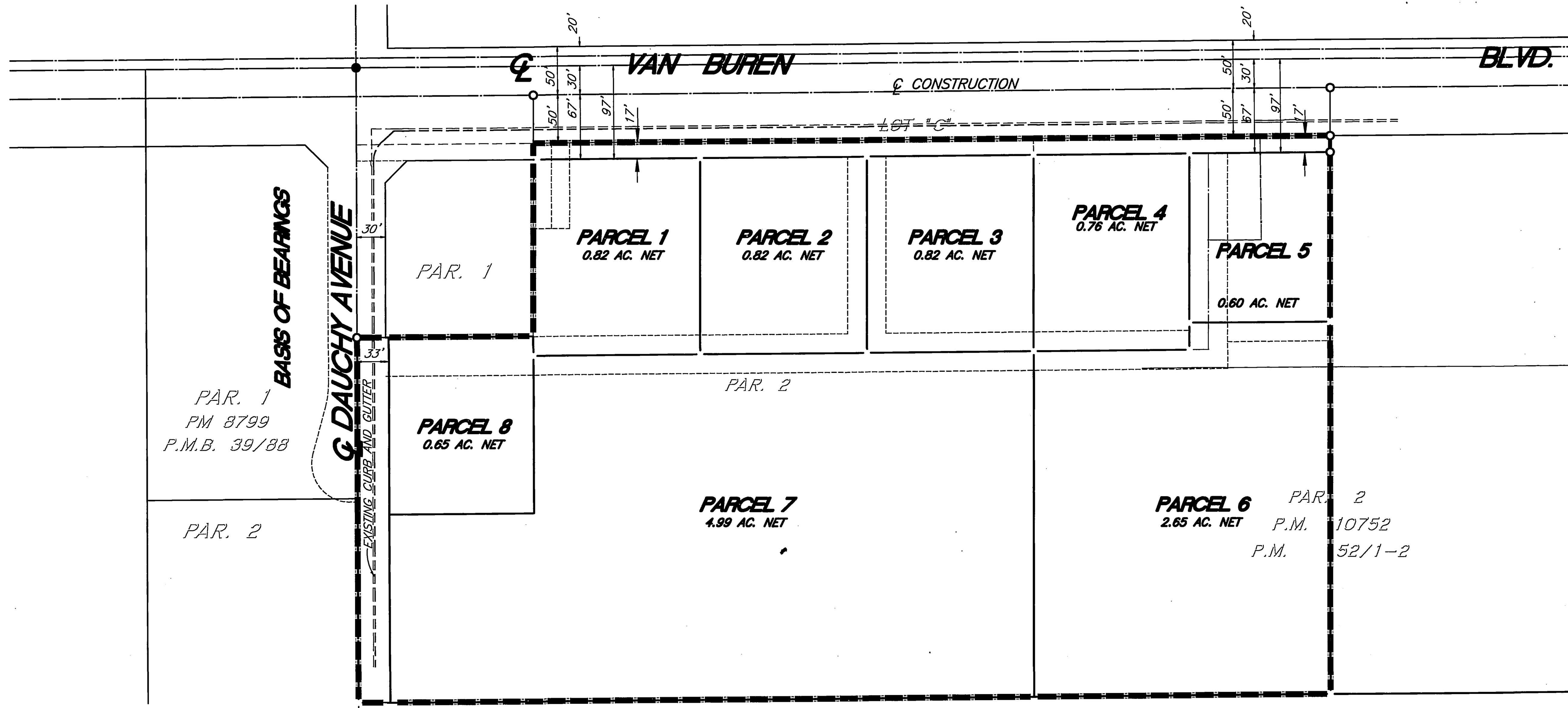

INDEX MAP

NOT TO SCALE

WMWD NOTE:

ALL WORK TO WESTERN'S SYSTEM TO BE CONDUCTED UNDER CONTINUOUS INSPECTION BY WESTERN'S INSPECTOR. WESTERN TO BE NOTIFIED 48 HOURS IN ADVANCE OF ANY CONSTRUCTION.

GENERAL NOTES:

1. NO PERSON SHALL PERFORM ANY CONSTRUCTION ACTIVITY OR INSTALL ANY OBJECTS WITHIN THE PUBLIC RIGHTS-OF-WAY OR EASEMENTS OF THE CITY OF RIVERSIDE WITHOUT A VALID CONSTRUCTION PERMIT OR, A STREET OPENING PERMIT OR AN ENCROACHMENT PERMIT ISSUED BY THE CITY'S PUBLIC WORKS DEPARTMENT.
2. IT SHALL BE THE RESPONSIBILITY OF THE CONTRACTOR TO CLEAR THE RIGHT OF WAY IN ACCORDANCE WITH THE PROVISIONS OF LAW AS IT AFFECTS EACH UTILITY INCLUDING IRRIGATION LINES AND APPURTENANCES AND AT NO COST TO THE CITY.
3. CONSTRUCTION SHALL BE IN ACCORDANCE WITH THE CITY OF RIVERSIDE DEPARTMENT OF PUBLIC WORKS, STANDARD DRAWINGS, ITS SUPPLEMENTAL NOTES AND THE STANDARD SPECIFICATIONS FOR PUBLIC WORKS CONSTRUCTION, CURRENT EDITION.
4. THE PRIVATE ENGINEER SIGNING THESE PLANS IS RESPONSIBLE FOR ASSURING THE ACCURACY AND ACCEPTABILITY OF THE WORK HEREON. IN THE EVENT OF DISCREPANCIES ARISING DURING CONSTRUCTION, THE PRIVATE ENGINEER SHALL BE RESPONSIBLE FOR DETERMINING AN ACCEPTABLE SOLUTION AND REVISING THE PLANS FOR APPROVAL BY THE CITY.
5. THE DEVELOPER SHALL BE RESPONSIBLE FOR PRESERVING OR REESTABLISHING AND REFERENCING SURVEY MONUMENTS DESTROYED, DISTURBED OR BURIED AS A RESULT OF CONSTRUCTION SHOWN HEREON.
6. ALL FLAGGED ELEVATIONS SHALL BE STAKED IN THE FIELD BY PRIVATE ENGINEER.
7. TRIM EDGE OF EXISTING PAVEMENT WHERE NEW PAVEMENT JOINS TO A SMOOTH, STRAIGHT LINE. CONSTRUCT MATCH-UP PAVING AS SHOWN ON PLAN AND OVERLAY PAVING AS DIRECTED IN THE FIELD TO PRODUCE A SMOOTH SECTION.
8. ANY TRAFFIC CONTROL STRIPING OBLITERATED AND/OR BADLY WORN DURING CONSTRUCTION SHALL BE RESTORED BY THE CONTRACTOR WITHIN FIVE DAYS AFTER NOTIFICATION FROM THE CITY INSPECTORS.
9. FINAL STRIPING FOR TRAFFIC CONTROL AND/OR PAVEMENT MARKING TO BE THE RESPONSIBILITY OF THE DEVELOPER.
10. THE CONTRACTOR SHALL CALL IN A LOCATION REQUEST TO UNDERGROUND SERVICE ALERT (USA), PHONE # 1-800-227-2600, TWO WORKING DAYS BEFORE DIGGING. NO CONSTRUCTION PERMIT WILL BE ISSUED BY THE PUBLIC WORKS DEPARTMENT INVOLVING EXCAVATION FOR UNDERGROUND FACILITIES UNLESS THE APPLICANT HAS BEEN PROVIDED AN INQUIRY IDENTIFICATION NUMBER USA.
11. IN PAVEMENT OVERLAY AREAS, DISTRESSED EXISTING PAVEMENT SHALL BE REMOVED AND REPLACED AS DIRECTED BY THE INSPECTOR PRIOR TO OVERLAYING WITH A.C. PAVING.
12. DEVELOPER/CONTRACTOR TO GIVE CITY WATER DIVISION FIVE (5) WORKING DAYS WRITTEN NOTICE PRIOR TO START OF CONSTRUCTION AND TO ALLOW CITY TEN (20) WORKING DAYS FOR COMPLETION OF WORK. (909) 351-6150.
13. ALL TRAFFIC SIGNS SHALL BE INSTALLED PRIOR TO OPENING THE STREETS TO TRAFFIC.

STREET TREE NOTES:

1. ALL RELATED WORK SHALL CONFORM TO THE CITY OF RIVERSIDE PARK AND RECREATION DEPARTMENT STANDARDS AND CITY OF RIVERSIDE STREET TREE POLICIES.
2. WHEN CALLING FOR INSPECTIONS CONTACT THE STREET TREE INSPECTOR A MINIMUM OF 48 HOURS IN ADVANCE AT (909) 351-6126 TO SCHEDULE AN INSPECTION. A FIELD NOTICE WILL BE ISSUED AS WRITTEN APPROVAL FOR EACH STAGE OF INSPECTION. A VERBAL APPROVAL WILL NOT BE ACCEPTABLE. INSPECTIONS ARE REQUIRED:
3. AFTER COMPLETION OF FINAL GRADING OF THE LOTS AND WHEN ALL UTILITY SERVICES AND SEWER LATERAL HAVE BEEN MARKED, BUT PRIOR TO DIGGING PLANT PITS, ALL FINAL STREET TREE LOCATIONS ARE TO BE SPOTTED IN THE FIELD BY THE STREET TREE INSPECTOR;
4. WHILE DIGGING PLANT PITS AND PLANTING/RELOCATING TREES;
5. AFTER PLANTING AND ALL OTHER INDICATED OR SPECIFIED WORK HAS BEEN COMPLETED, FOR START OF MAINTENANCE;
6. AT END OF THE MAINTENANCE PERIOD, THE CONTRACTOR DEVELOPER SHALL CALL THE STREET TREE INSPECTOR AT (909) 351-6126 FOR A FINAL ACCEPTANCE INSPECTION IN ORDER TO BE RELEASED FROM MAINTENANCE. DEVELOPER BONDS WILL NOT BE RELEASED UNTIL AFTER RECEIPT OF WRITTEN NOTIFICATION FOR THE CITY THAT THE TREES PASS FINAL INSPECTION AND THE PARK AND RECREATION DEPARTMENT IS ASSUMING MAINTENANCE RESPONSIBILITIES.
7. ALL STREET TREES ARE TO BE PLANTED PRIOR TO OCCUPANCY.
8. THE DEVELOPER SHALL BE RESPONSIBLE TO ACCEPTABLY MAINTAIN ALL PLANTINGS FOR A MINIMUM PERIOD OF ONE (1) YEAR.
9. STREET TREE PLANTING SHALL BE AS FOLLOWS:
10. BOTH A STREET TREE RELOCATION/REMOVAL PERMIT AS ISSUED BY THE PARK AND RECREATION DEPARTMENT AND A STREET OPENING PERMIT AS ISSUED BY THE PUBLIC WORKS DEPARTMENT ARE REQUIRED PRIOR TO COMMENCEMENT OF TREE RELOCATION AND/OR REMOVAL WORK. FOR ALL EXISTING TREES WITHIN WHAT WILL ULTIMATELY BE THE PUBLIC RIGHT-OF-WAY PAVEMENT AREA, BACKFILL OF ALL HOLES MUST BE INSPECTED BY THE PUBLIC WORKS INSPECTOR FOR PROPER COMPACTION.
11. ALL STREET TREES MUST BE AUTOMATICALLY IRRIGATED, EXCEPT WHERE ADJACENT TO SINGLE FAMILY OR DUPLEX RESIDENTIAL USES.

NOTE: IN THE INTEREST OF PUBLIC SAFETY AND MAINTENANCE THE STREET TREE INSPECTOR SHALL HAVE THE AUTHORITY AUTHORITY TO REVISE THE STREET TREE QUANTITIES AND LOCATIONS SHOWN ON APPROVED PLANS BASED UPON FIELD CONDITIONS FOUND AT THE TIME OF INSTALLATION OF THE TREES.

ATTENTION CONTRACTORS:

GRADES ARE GIVEN FROM TOP OF STAKES AND NAILS UNLESS OTHERWISE NOTED HEREIN. IN THE CASE OF A PIPE OR FLUME, GRADES GIVEN REFER TO THE HEIGHT OF THE BOTTOM OF THE INVERT OR INSIDE BOTTOM. CONTRACTORS ARE CAUTIONED TO OBSERVE THE FOLLOWING RULE IN USING THE GRADE STAKES GIVEN BY THIS OFFICE FOR PUTTING IN CURBS, WALKS, SEWER, FLUMES, AND ALL OTHER WORK.
THREE CONSECUTIVE POINTS THAT ARE SHOWN TO BE ON THE SAME RATE OF SLOPE MUST BE USED IN COMMON IN ORDER THAT ANY VARIATION OUT OF A PERFECT STRAIGHT GRADE MAY BE DETECTED, AND IN CASE ANY SUCH DISCREPANCY IS FOUND, THE SAME MUST BE REPORTED. OTHERWISE THIS OFFICE WILL NOT BE RESPONSIBLE FOR ANY ERROR IN THE GRADE OF THE FINISHED WORK. IN ANY CASE, ALL STAKES, NAILS, ITC., VOID IN THREE (3) DAYS.

CONTRACTOR SHALL VERIFY ALL CONDITIONS AND DIMENSIONS AND SHALL REPORT ALL REPORT ALL DISCREPANCIES TO THE ENGINEER PRIOR TO THE COMMENCEMENT OF WORK.

CONSTRUCTION CONTRACTOR AGREES THAT, IN ACCORDANCE WITH GENERALLY ACCEPTED CONSTRUCTION PRACTICES, CONSTRUCTION CONTRACTOR WILL BE REQUIRED TO ASSUME SOLE AND COMPLETE RESPONSIBILITY FOR JOB SITE CONDITIONS DURING THE COURSE OF CONSTRUCTION OF THE PROJECT, INCLUDING SAFETY OF ALL PERSONS AND PROPERTY: THAT THIS REQUIREMENT SHALL BE MADE TO APPLY CONTINUOUSLY AND NOT BE LIMITED TO NORMAL WORKING HOURS. CONSTRUCTION CONTRACTOR FURTHER AGREES TO DEFEND, INDEMNIFY AND HOLD DESIGN PROFESSIONAL HARMLESS FROM ANY AND ALL LIABILITY, REAL OR ALLEGED, IN CONNECTION WITH THE PERFORMANCE OF WORK ON THIS PROJECT, EXCEPTING LIABILITY ARISING FROM THE SOLE NEGLIGENCE OF DESIGN PROFESSIONAL.

PRIVATE ENGINEER'S NOTICE TO CONTRACTOR:

THE EXISTENCE AND LOCATION OF ANY UNDERGROUND UTILITY PIPES OR STRUCTURES SHOWN ON THESE PLANS WERE OBTAINED BY A SEARCH OF AVAILABLE RECORDS. THESE LOCATIONS ARE APPROXIMATE AND SHALL BE CONFIRMED IN THE FIELD BY THE CONTRACTOR, SO THAT ANY NECESSARY ADJUSTMENTS CAN BE MADE IN ALIGNMENT AND/OR GRADE OF THE PROPOSED IMPROVEMENTS. THE CONTRACTOR IS REQUIRED TO TAKE DUE PRECAUTIONARY MEASURES TO PREVENT ANY UTILITY LINES SHOWN AND ANY OTHER LINES NOT OF RECORD OR NOT SHOWN ON THESE PLANS.
ACTUAL THICKNESS OF BASE MATERIAL TO BE DETERMINED BY THE SOILS TEST AND RECOMMENDED BY THE SOILS ENGINEER. R-VALUES, SAND EQUIVALENTS AND STRUCTURAL SECTION OF STREETS SHALL BE SUBMITTED TO THE CITY OF CORONA FOR APPROVAL UPON COMPLETION OF ROUGH GRADING.
CARE SHOULD BE TAKEN TO PREVENT GRADED DITCHES AND SWALES FROM UNDERMINING STREET IMPROVEMENTS. UPON INSPECTION OF THE SITE, THE CITY ENGINEER MAY REQUIRE TEMPORARY GUNITE SWALES, ENTERING OR LEAVING IMPROVEMENTS.

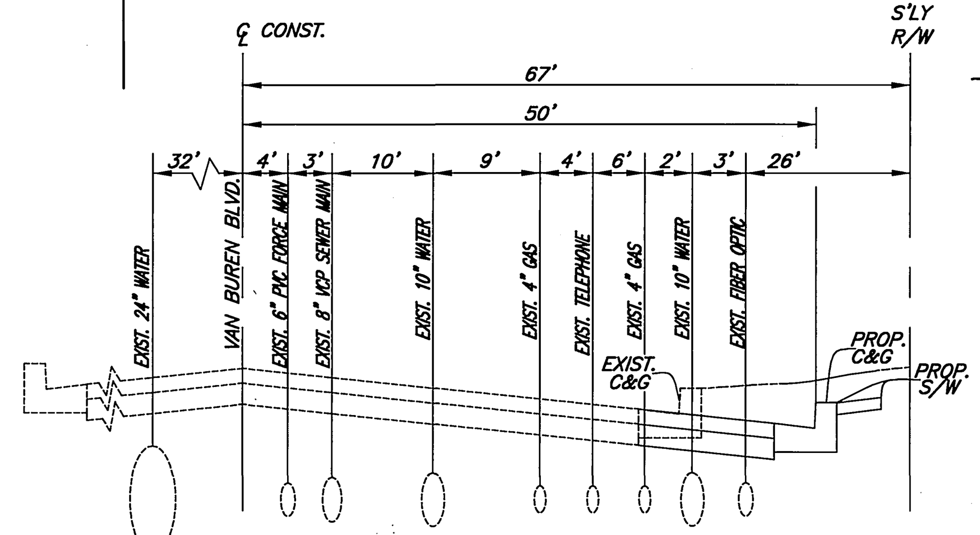

UTILITIES VAN BUREN BLVD.

NOT TO SCALE

NOTE: CONTRACTOR TO FIELD VERIFY LOCATIONS AND DEPTHS OF UTILITIES IN AREAS OF WORK. THESE LOCATIONS ARE APPROXIMATE AND WERE ARRIVED AT BY A SEARCH OF AVAILABLE RECORDS. EXTREME CAUTION SHOULD BE USED AT ALL TIMES WHEN WORKING ABOVE UTILITIES. USA SHOULD BE CONTACTED PRIOR TO WORK. IF A CONFLICT IS NOTED IN THE FIELD THE CONTRACTOR SHALL NOTIFY THE ENGINEER IMMEDIATELY.

BENCH MARK:

P.K. NAIL AND CITY ENGINEER TAG IN THE TOP OF THE SIDEWALK OVER THE EASTERLY WALL OF A CATCH BASIN ALONG THE SOUTHERLY CURB OF VAN BUREN BOULEVARD AND 700 FEET EASTERLY OF WOOD ROAD.

POINT I.D. NO.: E8-G3
ELEVATION: 1642.465

LEGEND

(pattern)	NEW ASPHALT
(pattern)	NEW CONCRETE
(T.C.)	EX. TOP OF CURB
(F.S.)	EX. FINISHED SURFACE
T.C.	TOP OF CURB
F.S.	FINISHED SURFACE
C.L.	CENTER LINE
R.W.	RIGHT OF WAY
B.C.R.	BEGIN CURB RETURN
E.C.R.	END CURB RETURN
S	SLOPE
STA.	STATION

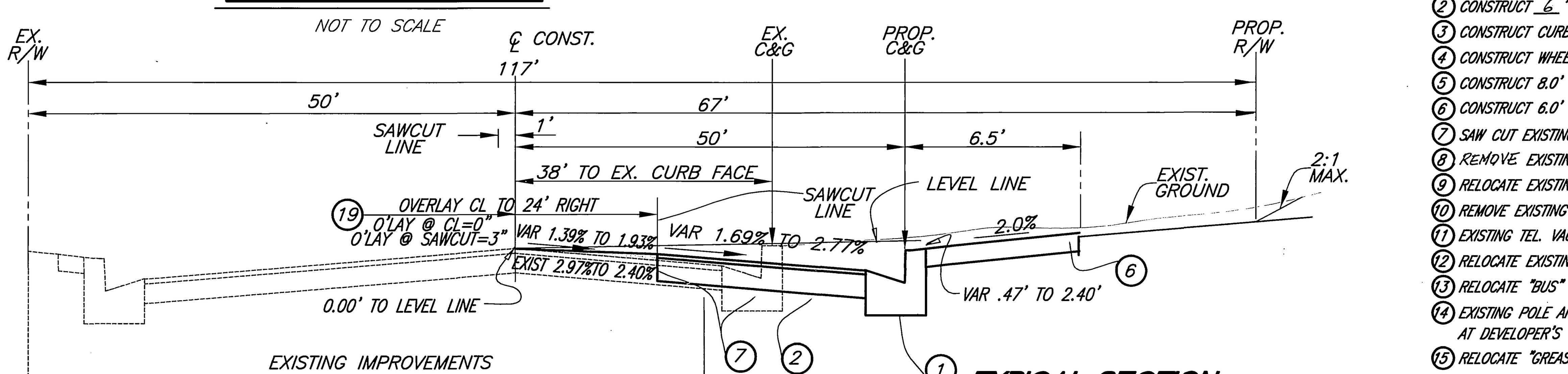

TYPICAL SECTION VAN BUREN BLVD.

NOT TO SCALE
T.I. = 10.5

△1 (4A) CONSTRUCT WHEEL CHAIR RAMP PER STD. DWG 304, TYPE III
(21) CONSTRUCT PARKWAY DRAIN PER A.P.W.A. STD. DWG. 151-1

CONSTRUCTION NOTES:

1	CONSTRUCT CURB AND GUTTER PER CITY OF RIVERSIDE STD. 200. (8" C.F.)	773 L.F.
2	CONSTRUCT 6" A.C. OVER 8" A.B. PER S.R. 1604 R=53	9,568 S.F.
3	CONSTRUCT CURB REVERSE TAPER PER CITY OF RIVERSIDE STD. 122.	9,568 S.F.
4	CONSTRUCT WHEELCHAIR ACCESS RAMP PER CITY OF RIVERSIDE STD. 304 TYPE 1.	2 EA.
5	CONSTRUCT 8.0' CROSS GUTTER PER CITY OF RIVERSIDE STD 220.	300 S.F.
6	CONSTRUCT 6.0' WIDE SIDEWALK PER CITY OF RIVERSIDE STD. 325.	4,460 S.F.
7	SAW CUT EXISTING A.C. AND REMOVE EXISTING CURB AND GUTTER AND 12' OF EXISTING A.C.	18487 S.F.
8	REMOVE EXISTING BILLBOARD	2 EA.
9	RELOCATE EXISTING FIRE HYDRANT PER W.M.W.D. STD. W-0610.	2 EA.
10	REMOVE EXISTING FENCE.	76 L.F.
11	EXISTING TEL. VAULT TO BE ADJUSTED BY PACIFIC BELL AT DEVELOPER'S EXPENSE.	1 EA.
12	RELOCATE EXISTING MAILBOX PER CITY STANDARD.	1 EA.
13	RELOCATE "BUS" SIGN PER CITY STANDARDS.	1 EA.
14	EXISTING POLE AND GUY TO BE RELOCATED BY SOUTHERN CALIFORNIA EDISON AT DEVELOPER'S EXPENSE.	1 EA.
15	RELOCATE "GREASE MONKEY" SIGN PER CITY OF RIVERSIDE STANDARDS.	1 EA.
16	RELOCATE WATER METER PER W.M.W.D. STD. W-0080.	6 EA.
17	RELOCATE WATER BACKFLOW PER W.M.W.D. STD. W0520.	3 EA.
18	INSTALL "STOP" AND R1 STOP SIGN PER CALTRANS STANDARDS AND CITY OF RIVERSIDE STANDARD DRAWING NO. 666.	1 EA.
19	OVERLAY EXISTING PAVEMENT PER TYPICAL SECTION ON THIS SHEET	19760 S.F.

The Gas Company	WESTERN MUNICIPAL WATER DISTRICT	SOUTHERN CALIFORNIA EDISON COMPANY	PACIFIC BELL TELEPHONE COMPANY	RIVERSIDE TRANSIT AUTHORITY
(signature) 12/6/02	(signature) 11/25/02 ~~APPROVED BY~~ REVIEWED	(signature) APPROVED BY	(signature) APPROVED BY 12/2/02	(signature) ~~APPROVED BY~~ REVIEWED

IW Consulting Engineers, Inc.
· Civil Engineering
· Surveying
· Land Planning
3544 University Ave.
Riverside, CA 92501
Tel: 909.687.2929
Fax: 909.687.2999
CITY BUSINESS TAX CERT. NO. 106198, EXPIRES 01/01/2004

REGISTERED PROFESSIONAL ENGINEER — FREDDY IRIANTO — No. 60874 — Exp.12/31/04 — CIVIL — STATE OF CALIFORNIA

PREPARED UNDER THE SUPERVISION OF:
(signature)
FREDDY IRIANTO 10/16/02
RCE 60874 EXP. 12/31/04

MARK	REVISIONS	APPR.	DATE
△1	ADDED COMMERCIAL DWY, SHEET 2	RI2	3.29.06

DESIGNED BY C.A.W. DRAWN BY C.A.W. CHECKED BY B.G.E.

CITY OF RIVERSIDE, CALIFORNIA
PUBLIC WORKS DEPARTMENT

APPROVED BY	BY	DATE
PRINCIPAL ENGINEER	(initials)	4/2/03
STREET SERVICES	(initials)	2/4/03
TRAFFIC DIVISION	(initials)	6/2/3
PARKS DEPARTMENT	(initials)	12/10/02

APPROVED BY (signature) CITY ENGINEER
DATE 6/3/03

VAN BUREN BLVD.
SOUTH SIDE 200' TO 1,100'
EAST SIDE OF DAUCHY
PARCEL MAP 28543

HORIZ. SCALE: 1" = 40' VERT. SCALE: 1" = 4'

R-3697

SHEET 1 OF 2

JOB NO. 103.001

INDEXED 6-30-03 LH

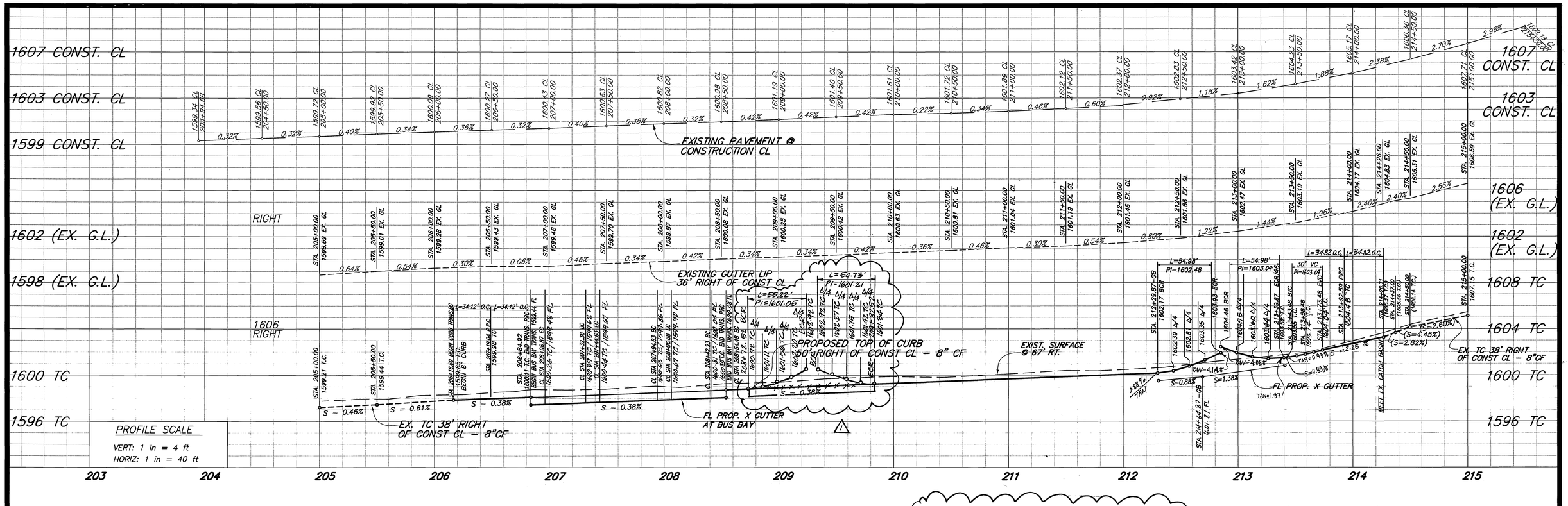

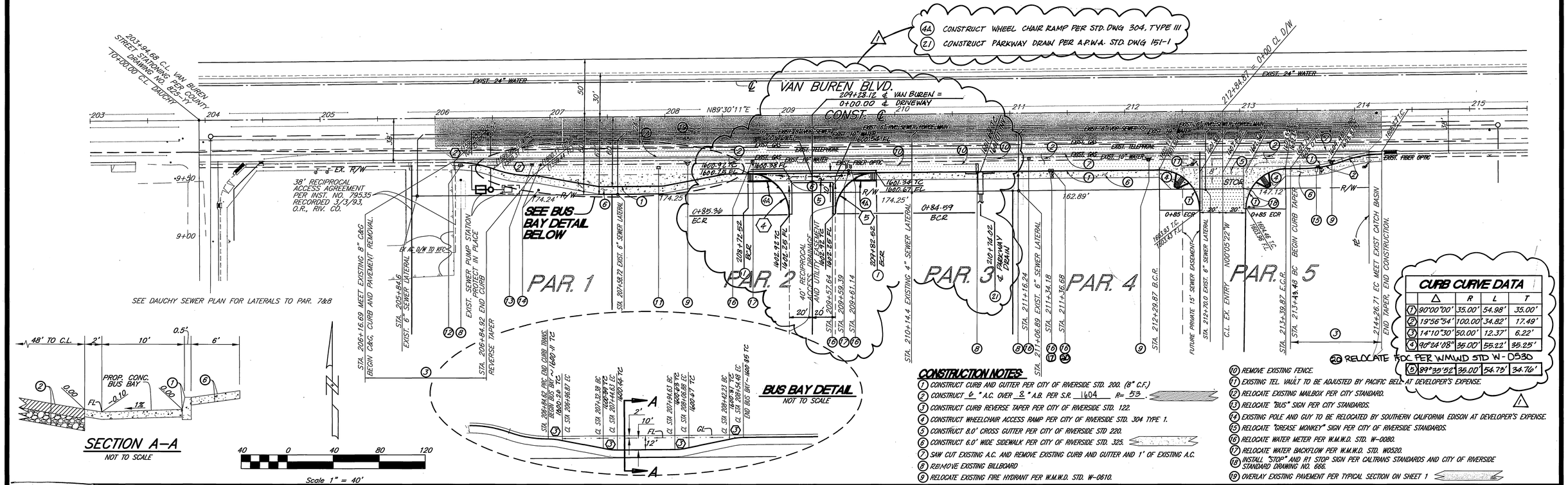

(4A) CONSTRUCT WHEEL CHAIR RAMP PER STD. DWG 304, TYPE III

(2.1) CONSTRUCT PARKWAY DRAIN PER A.P.W.A. STD. DWG 151-1

CURB CURVE DATA

	Δ	R	L	T
(1)	90°00'00"	35.00'	54.98'	35.00'
(2)	19°56'54"	100.00'	34.82'	17.49'
(3)	14°10'30"	50.00'	12.37'	6.22'
(4)	90°24'08"	35.00'	55.22'	35.25'
(5)	89°39'52"	35.00'	54.75'	34.76'

(20) RELOCATE FDC PER W.M.W.D STD W-0530

CONSTRUCTION NOTES:

1. CONSTRUCT CURB AND GUTTER PER CITY OF RIVERSIDE STD. 200. (8" C.F.)
2. CONSTRUCT 6" A.C. OVER 8" A.B. PER S.R. 1604 R= 53'.
3. CONSTRUCT CURB REVERSE TAPER PER CITY OF RIVERSIDE STD. 122.
4. CONSTRUCT WHEELCHAIR ACCESS RAMP PER CITY OF RIVERSIDE STD. 304 TYPE 1.
5. CONSTRUCT 8.0' CROSS GUTTER PER CITY OF RIVERSIDE STD 220.
6. CONSTRUCT 6.0' WIDE SIDEWALK PER CITY OF RIVERSIDE STD. 325.
7. SAW CUT EXISTING A.C. AND REMOVE EXISTING CURB AND GUTTER AND 1' OF EXISTING A.C.
8. REMOVE EXISTING BILLBOARD
9. RELOCATE EXISTING FIRE HYDRANT PER W.M.W.D. STD. W-0810.
10. REMOVE EXISTING FENCE.
11. EXISTING TEL. VAULT TO BE ADJUSTED BY PACIFIC BELL AT DEVELOPER'S EXPENSE.
12. RELOCATE EXISTING MAILBOX PER CITY STANDARD.
13. RELOCATE "BUS" SIGN PER CITY STANDARDS.
14. EXISTING POLE AND GUY TO BE RELOCATED BY SOUTHERN CALIFORNIA EDISON AT DEVELOPER'S EXPENSE.
15. RELOCATE "GREASE MONKEY" SIGN PER CITY OF RIVERSIDE STANDARDS.
16. RELOCATE WATER METER PER W.M.W.D. STD. W-0080.
17. RELOCATE WATER BACKFLOW PER W.M.W.D. STD. W0520.
18. INSTALL "STOP" AND R1 STOP SIGN PER CALTRANS STANDARDS AND CITY OF RIVERSIDE STANDARD DRAWING NO. 686.
19. OVERLAY EXISTING PAVEMENT PER TYPICAL SECTION ON SHEET 1

The Gas Company	WESTERN MUNICIPAL WATER DISTRICT	SOUTHERN CALIFORNIA EDISON COMPANY	PACIFIC BELL TELEPHONE COMPANY
12/16/02	11/25/02 APPROVED BY REVIEWED	APPROVED BY 1-30-03	APPROVED BY 12/17/02

RIVERSIDE TRANSIT AUTHORITY — APPROVED BY REVIEWED

IW Consulting Engineers, Inc.
· Civil Engineering
· Surveying
· Land Planning
3544 University Ave. Riverside, CA 92501
Tel: 909.687.2929 Fax: 909.687.2990
CITY BUSINESS TAX CERT. NO. 106198, EXPIRES 01/01/2004

REGISTERED PROFESSIONAL ENGINEER FREDDY IRLANTO No. 60874 Exp.12/31/04 CIVIL STATE OF CALIFORNIA

PREPARED UNDER THE SUPERVISION OF: FREDDY IRLANTO RCE 60874 — 10/16/02 EXP. 12/31/04

MARK	REVISIONS	APPR.	DATE
1	ADDED COMMERCIAL DWY.	RJZ	3.31.03

DESIGNED BY CAW DRAWN BY CAW CHECKED BY DGE

CITY OF RIVERSIDE, CALIFORNIA
PUBLIC WORKS DEPARTMENT

APPROVED BY	BY	DATE
PRINCIPAL ENGINEER		6/2/03
STREET SERVICES		6/2/03
TRAFFIC DIVISION		6/2/03
PARKS DEPARTMENT		6/2/03

APPROVED BY CITY ENGINEER — DATE 6/2/03

VAN BUREN BLVD. SOUTH SIDE 200' TO 1,100' EAST SIDE OF DAUCHY PARCEL MAP 28543

R. 3697

SHEET 2 OF 2

HORIZ. SCALE: 1" = 40' VERT. SCALE: 1" = 4'

JOB NO. 103.001

INDEXED 6-30-03 JH