STREET IMPROVEMENT PLANS
FOR
ARLINGTON AVENUE AND MURRAY STREET
AT
THE RIVERSIDE REGIONAL LEARNING CENTER

CONSTRUCTION NOTES AND QUANTITY ESTIMATES			
NO.	DESCRIPTION	QUANTITY TOTAL	UNIT
1	CONSTRUCT 7" A.C. PAVEMENT OVER 11" A.B. CLASS II PER CITY OF RIVERSIDE STDS. AND SOIL ENGINEER'S RECOMMENDATIONS. (ARLINGTON AVE.)	3,340	S.F.
2	CONSTRUCT 5" A.C. PAVEMENT OVER 8" A.B. CLASS II PER CITY OF RIVERSIDE STDS. AND SOIL ENGINEER'S RECOMMENDATIONS. (MURRAY STREET)	4,840	S.F.
3	CONSTRUCT 6" CURB AND GUTTER TYPE I PER CITY OF RIVERSIDE STD. DWG. NO. 200.	543	L.F.
4	CONSTRUCT TYPE I ASPHALT CONCRETE BERM PER CITY OF RIVERSIDE STD. NO. 250.	61	L.F.
5	CONSTRUCT CONCRETE DRIVEWAY APPROACH PER CITY OF RIVERSIDE STD. NO. 302, TYPE PL-I OR CURB-I~ SEE PLAN FOR CALLOUT.	1,284	S.F.
6	CONSTRUCT 5' WIDE (MIN.) TEMPORARY A.C. SIDEWALK AS REQUIRED BY CITY OF RIVERSIDE. JOIN EXISTING AND NEW SIDEWALK AT F.S. GRADE.	268	S.F.
7	CONSTRUCT 6.5' WIDE CONCRETE (CURB LINE) SIDEWALK PER CITY OF RIVERSIDE STD. DWG. NO. 325. – ARLINGTON AVE.	1,672	S.F.
8	CONSTRUCT 5' WIDE CONCRETE (PROPERTY LINE) SIDEWALK PER CITY OF RIVERSIDE STD. DWG. NO. 325.– MURRAY ST.	796	S.F.
9	SAWCUT & REMOVE EXISTING A.C. BERM AND PAVEMENT.	6,983	S.F.
10	CONSTRUCT TYPE L GUIDE MARKERS PER CITY OF RIVERSIDE STD. DWG. NO. 665. – INSTALL MARKERS AT 10' O.C.	5	EA.
11	RELOCATE EXISTING POWER POLE W/STREET LIGHT BEHIND NEW CURB AND GUTTER PER CITY OF RIVERSIDE STANDARDS.	2	EA.
12	CONSTRUCT CURB OUTLET PER CITY OF RIVERSIDE STD. DWG. NO. 410.	2	EA.
13	REMOVE EXISTING CURB & GUTTER	25	L.F.
14	REMOVE EXISTING CONCRETE DRIVEWAY	176	S.F.
15	ADJUST SEWER MANHOLE FRAME AND COVER TO GRADE.	1	EA.

NOTICE TO CONTRACTOR

THE EXISTENCE AND LOCATION OF ANY UNDERGROUND UTILITIES AND/OR STRUCTURES SHOWN ON THESE PLANS WERE OBTAINED BY SEARCH OF AVAILABLE RECORDS. TO THE BEST OF OUR KNOWLEDGE THERE ARE NO EXISTING UTILITIES EXCEPT THOSE SHOWN ON THIS PLAN. THE CONTRACTOR IS REQUIRED TO TAKE ALL PRECAUTIONARY MEASURES TO PROTECT THE UTILITIES SHOWN, AND ANY OTHER LINES OR STRUCTURES NOT SHOWN ON THESE PLAN. THE CONTRACTOR IS RESPONSIBLE FOR THE PROTECTION OF AND ANY DAMAGE TO THESE LINES OR STRUCTURES.

THE CONTRACTOR SHALL EXCAVATE INSPECTION HOLES (POT HOLES) AND DETERMINE THE LOCATION AND DEPTH OF ALL UNDERGROUND STRUCTURES AND UTILITIES THAT ARE BEING JOINED WITH NEW IMPROVEMENTS, ARE IN THE VICINITY OF, OR THAT MAY BE AFFECTED BY THE PROPOSED IMPROVEMENT WORK PRIOR TO THE START OF ANY CONSTRICTION WORK WHICH COULD DAMAGE OR CONFLICT WITH SAID STRUCTURES OR UTILITIES.

THE CONTRACTOR AGREES THAT HE SHALL ASSUME SOLE AND COMPLETE RESPONSIBILITY FOR JOB SITE CONDITIONS DURING THE COURSE OF CONSTRUCTION OF THIS PROJECT, INCLUDING SAFETY OF ALL PERSONS AND PROPERTY: THAT THIS REQUIREMENT SHALL APPLY CONTINUOUSLY AND NOT BE LIMITED TO NORMAL WORKING HOURS; AND THAT THE CONTRACTOR SHALL DEFEND, INDEMNIFY AND HOLD THE OWNER AND THE ENGINEER HARMLESS FROM ANY AND ALL LIABILITY, REAL OR ALLEGED, IN CONNECTION WITH THE PERFORMANCE OF WORK ON THIS PROJECT, EXCEPTING FOR LIABILITY ARISING FROM THE SOLE NEGLIGENCE OF THE OWNER OR THE ENGINEER.

CAUTION: THE ENGINEER PREPARING THESE PLANS WILL NOT BE RESPONSIBLE FOR, OR LIABLE FOR, UNAUTHORIZED CHANGES TO OR USES OF THESE PLANS. ALL CHANGES TO THESE PLANS MUST BE IN WRITING AND MUST BE APPROVED BY THE PREPARER OF THESE PLANS.

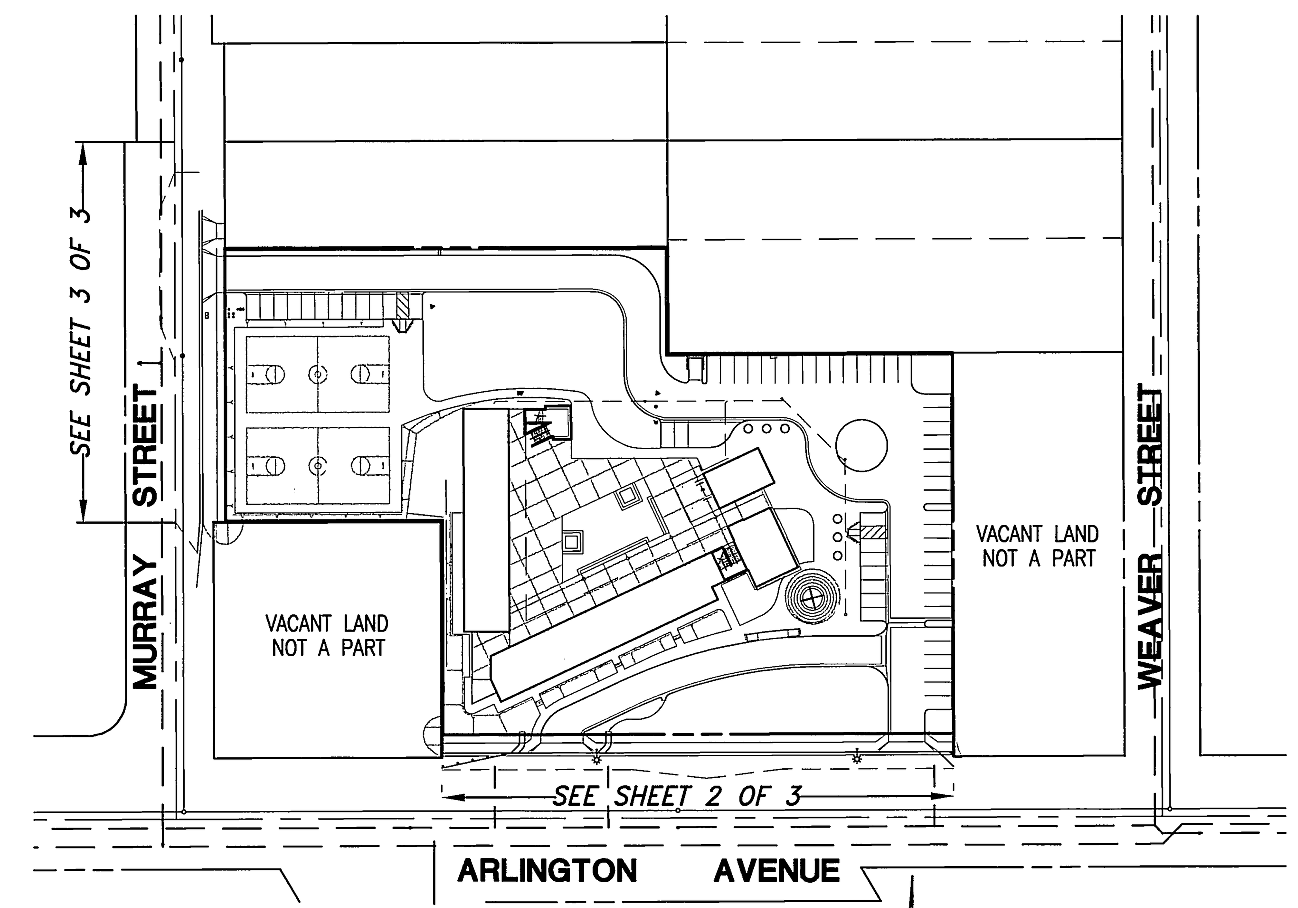

INDEX MAP
SCALE: 1"=100'

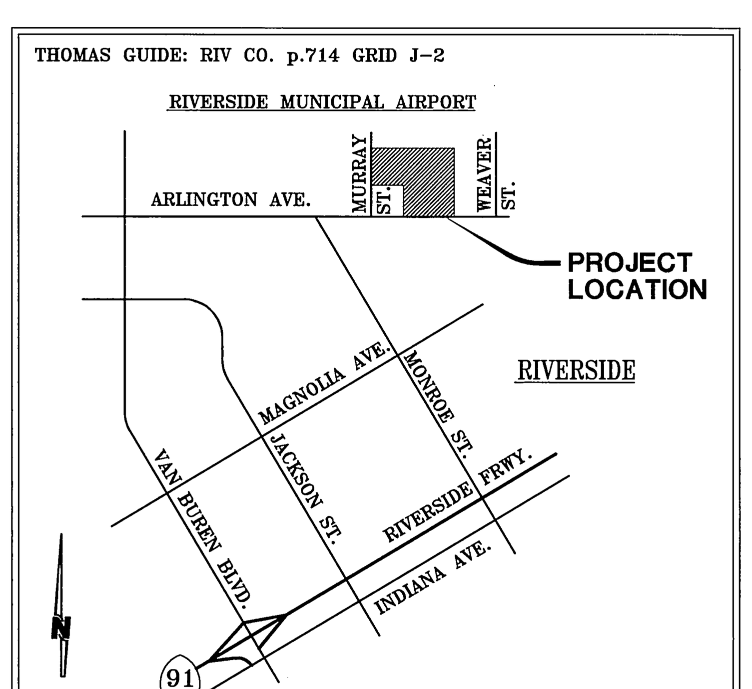

VICINITY MAP
NTS

UNDERGROUND SERVICE ALERT
CALL: TOLL FREE
1-800
227-2600
TWO WORKING DAYS BEFORE YOU DIG

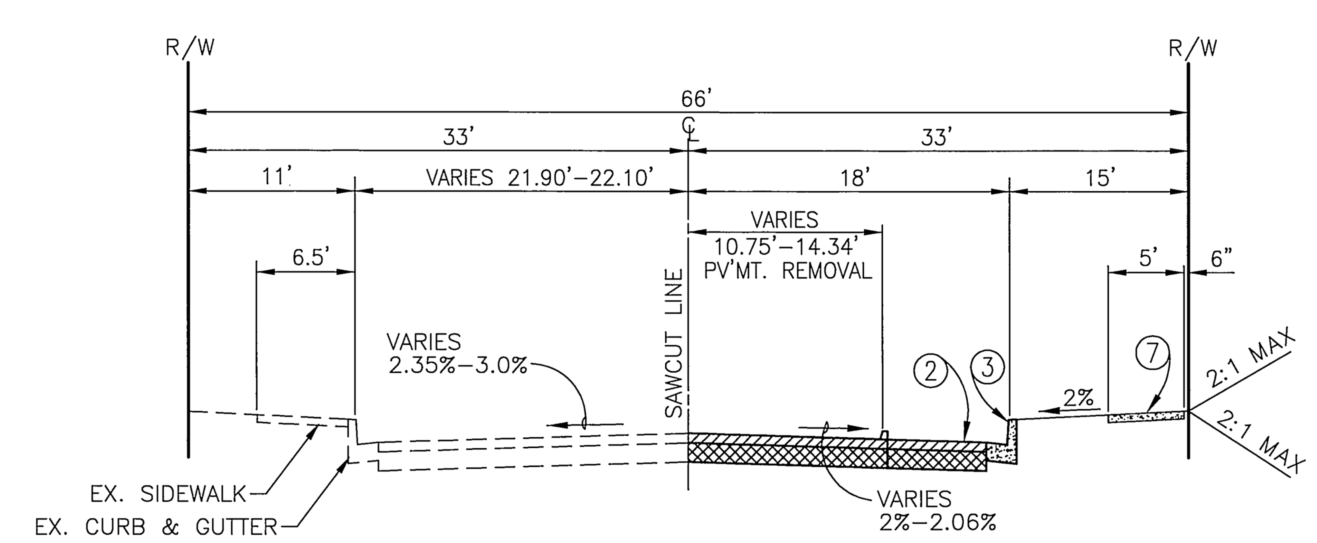

MURRAY STREET
TYPICAL SECTION
STA. 11+94.99 TO STA. 13+00.00
T.I. = 8

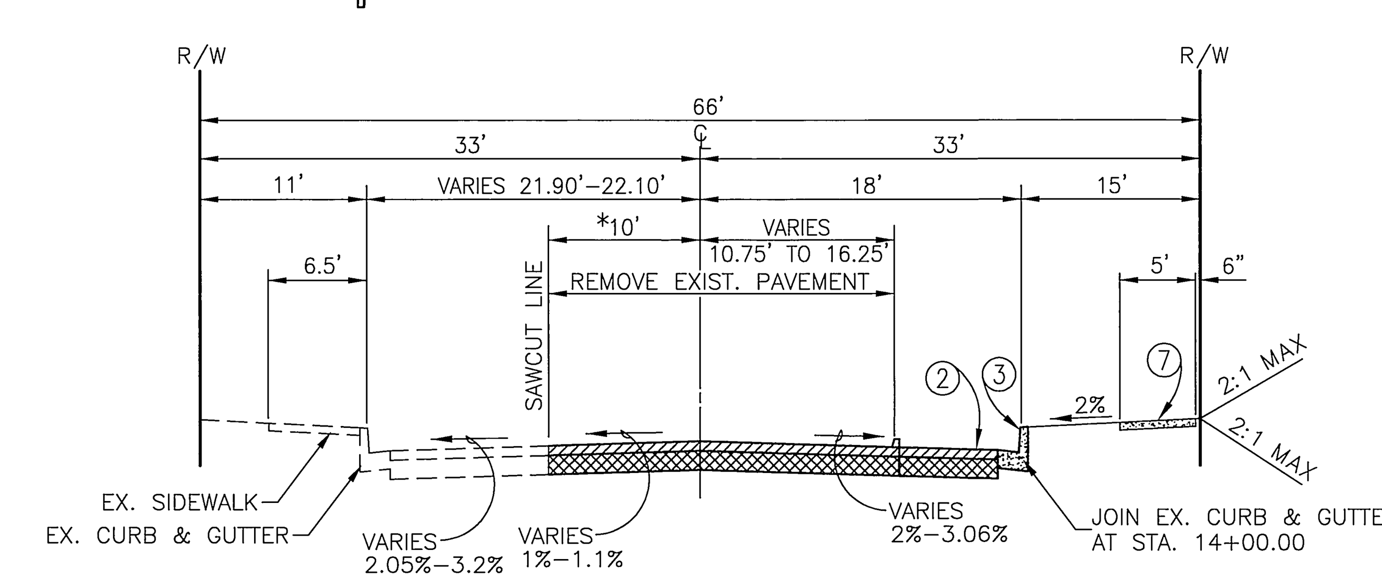

MURRAY STREET
TYPICAL SECTION
STA. 13+00.00 TO STA. 14+25.00
T.I. = 8

* SAWCUT LINE TRANSITIONS FROM C/L TO 10' BETWEEN STA. 13+00 AND STA. 13+25 AND BETWEEN STA. 14+00 TO 14+25

BENCHMARK

CITY OF RIVERSIDE POINT NO. G4-T3.
P.K. NAIL AND CITY ENGINEER TAG IN A STREET LIGHT BASE ALONG THE SOUTHERLY CURB OF ARLINGTON AVENUE, 55 FEET EASTERLY OF NEIL STREET.

ELEV. = 789.705

BASIS OF BEARING

THE CENTERLINE BEARING OF ARLINGTON AVE. BEING N 89°48'14" E IS THE BASIS OF ALL BEARINGS SHOWN ON THESE PLANS.

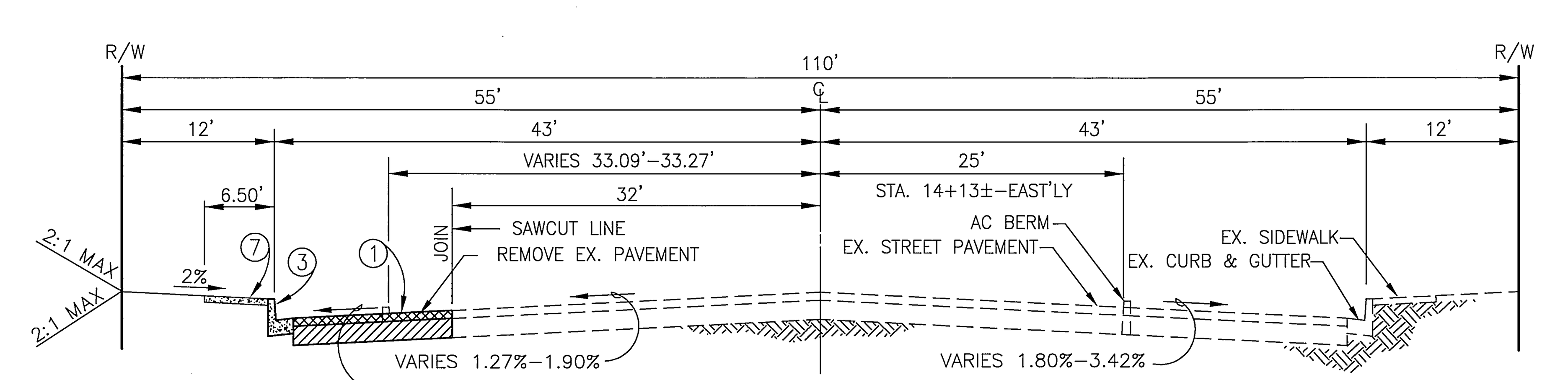

ARLINGTON AVENUE
TYPICAL SECTION
STA. 11+75.16 TO STA. 15+12.91
T.I. = 10.5

GENERAL NOTES

1. NO PERSON SHALL PERFORM ANY CONSTRUCTION ACTIVITY OR INSTALL ANY OBJECTS WITHIN THE PUBLIC RIGHT-OF-WAY OR EASEMENTS OF THE CITY OF RIVERSIDE WITHOUT A VALID CONSTRUCTION PERMIT; OR A STREET OPENING PERMIT; OR AN ENCROACHMENT PERMIT ISSUED BY THE CITY'S PUBLIC WORKS DEPARTMENT.
2. IT SHALL BE THE RESPONSIBILITY OF THE CONTRACTOR TO CLEAR THE RIGHT OF WAY IN ACCORDANCE WITH THE PROVISIONS OF LAW AS IT AFFECTS EACH UTILITY INCLUDING IRRIGATION LINES AND APPURTENANCES AND AT NO COST TO THE CITY.
3. CONSTRUCTION SHALL BE IN ACCORDANCE WITH THE CITY OF RIVERSIDE DEPARTMENT OF PUBLIC WORKS, STANDARD DRAWINGS, STANDARD DRAWING NO.10 AND THE STANDARD SPECIFICATIONS FOR PUBLIC WORKS CONSTRUCTION, CURRENT EDITION.
4. THE PRIVATE ENGINEER SIGNING THESE PLANS IS RESPONSIBLE FOR ASSURING THE ACCURACY AND ACCEPTABILITY OF THE WORK HEREON. IN THE EVENT OF DISCREPANCIES ARISING DURING CONSTRUCTION, THE PRIVATE ENGINEER SHALL BE RESPONSIBLE FOR DETERMINING AN ACCEPTABLE SOLUTION AND REVISING THE PLANS FOR APPROVAL BY THE CITY.
5. QUANTITIES SHOWN ARE FOR INFORMATION ONLY AND THE CITY OF RIVERSIDE IS NOT RESPONSIBLE FOR THEIR ACCURACY.
6. THE DEVELOPER SHALL BE RESPONSIBLE FOR PRESERVING OR RE-ESTABLISHING AND REFERENCING SURVEY MONUMENTS DESTROYED, DISTURBED OR BURIED AS A RESULT OF CONSTRUCTION SHOWN HEREON.
7. SEE "STREET LIGHTING PLANS" FOR QUANTITY AND LOCATION OF REQUIRED STREET LIGHTS.
8. ALL FLAGGED ELEVATIONS SHALL BE STAKED IN THE FIELD BY THE CONTRACTOR'S SURVEYOR.
9. WHERE NEW PAVEMENT IS TO JOIN THE EXISTING PAVEMENT, THE EDGE OF THE EXISTING PAVEMENT SHALL BE TRIMMED IN A SMOOTH AND STRAIGHT LINE. CONSTRUCT MATCH-UP PAVING AS SHOWN ON THE PLANS AND OVERLAY PAVING AS DIRECTED IN THE FIELD TO PRODUCE A SMOOTH SECTION.
10. TRAFFIC INDEX AND PAVEMENT SECTIONS SHOWN HEREON ARE TENTATIVE. THE DEVELOPER SHALL ARRANGE FOR A SOIL TEST TO BE MADE BY A SOILS ENGINEER AFTER THE STREETS HAVE BEEN PREPARED TO ROUGH GRADE AND PRIOR TO CURB AND GUTTER CONSTRUCTION. THE DEPTH OF BASE MATERIAL AND A.C. PAVING SHALL BE DETERMINED BY THE CITY OF RIVERSIDE DESIGN STANDARDS AND TEST PROCEDURES.
11. CONSTRUCT DRIVEWAY APPROACHES PER STANDARD DRAWING 302. EXACT SIZE AND LOCATION TO BE STAKED BY THE CONTRACTOR'S SURVEYOR PRIOR TO CONSTRUCTION OF THE CURB AND GUTTER.
12. ON ALL AREAS WITHIN PUBLIC RIGHT OF WAY WHERE THE FILL IS ONE (1) FOOT OR GREATER, A LETTER WILL BE REQUIRED FROM THE SOILS ENGINEER, CERTIFYING THE COMPACTION OF THE FILL BELOW SUBGRADE, PRIOR TO ISSUANCE OF THE CONSTRUCTION PERMIT/CUT SHEETS.
13. ALL TRAFFIC SIGNS SHALL BE INSTALLED PRIOR TO OPENING THE STREETS TO TRAFFIC.
14. ANY TRAFFIC CONTROL STRIPING OBLITERATED AND/OR BADLY WORN DURING CONSTRUCTION SHALL BE RESTORED BY THE CONTRACTOR WITHIN FIVE DAYS AFTER NOTIFICATION FROM THE CITY INSPECTORS.
15. FINAL STRIPING FOR TRAFFIC CONTROL AND/OR PAVEMENT MARKING TO BE THE RESPONSIBILITY OF THE DEVELOPER.
16. THE CONTRACTOR SHALL CALL IN A LOCATION REQUEST TO UNDERGROUND SERVICE ALERT (USA), PHONE# 1-800-422-4133, TWO (2) WORKING DAYS BEFORE DIGGING. NO CONSTRUCTION PERMIT WILL BE ISSUED BY THE PUBLIC WORKS DEPARTMENT INVOLVING EXCAVATION FOR UNDERGROUND FACILITIES UNLESS THE APPLICANT HAS BEEN PROVIDED AN INQUIRY IDENTIFICATION NUMBER BY U.S.A.
17. CONTRACTOR IS TO VERIFY EXISTING SEWER ELEVATION PRIOR TO CONSTRUCTION.
18. LOCATION OF LATERALS TO BE DETERMINED IN THE FIELD AT THE DIRECTION OF THE OWNER. AVOID CONFLICT WITH PROPOSED AND/OR EXISTING FACILITIES.
19. NO FINISHED FLOOR SHALL BE LESS THAN 4' ABOVE THE SEWER FLOW LINE AT POINT OF CONNECTION WITHOUT HAVING A PROPER BACKWATER VALVE INSTALLED IN THE LATERAL.
20. A PLUG SHALL BE INSTALLED AND WILL REMAIN IN PLACE WHERE THE NEW SEWER CONNECTS WITH THE EXISTING SEWER UNTIL THE NEW SEWER IS ACCEPTED BY THE CITY.
21. IN PAVEMENT OVERLAY AREAS, DISTRESSED EXISTING PAVEMENT SHALL BE REMOVED AND REPLACED AS DIRECTED BY THE INSPECTOR PRIOR TO OVERLAYING WITH A.C. PAVING.

WATER CONSTRUCTION NOTES

⟨1⟩ EXISTING 1" WATER SERVICES TO BE CUT AND PLUGGED BY CITY FORCES.

DEVELOPER TO GIVE CITY WATER DIVISION FIVE (5) WORKING DAYS WRITTEN NOTICE PRIOR TO CONSTRUCTION AND TO ALLOW CITY FIFTEEN (15) WORKING DAYS FOR COMPLETION OF WORK.

STREET LIGHTING

THE CONTRACTOR IS RESPONSIBLE FOR THE INSTALLATION OF STREET LIGHTS AND UNDERGROUND ELECTRICAL FACILITIES. CONTACT CITY OF RIVERSIDE PUBLIC UTILITIES DEPT. 90 DAYS IN ADVANCE OF CONSTRUCTION TO OBTAIN APPROVED STREET LIGHT AND ELECTRICAL PLANS. CONTACT VAHID BAZEL: (951) 826-5830

File name: R:\SCHOOLS\RCDE\RivLc\RivLC_C-7.dwg <R14>
Plot date: 11/22/05 at 17:00

CITY OF RIVERSIDE
PUBLIC UTILITIES DEPARTMENT
ELECTRIC DIVISION
APPROVED BY: [signature] DATE: 12/20/05

CITY OF RIVERSIDE
PUBLIC UTILITIES DEPARTMENT
WATER DIVISION
APPROVED BY: MW McLeod DATE: 12/1/05

REGISTERED PROFESSIONAL ENGINEER — STEVEN L. RAY — 35334 — 9-30-07 — CIVIL — STATE OF CALIFORNIA

PREPARED UNDER THE SUPERVISION OF:
STEVEN L. RAY — R.C.E. 35334 — EXP. 9/30/07 — 11-28-05 DATE

RHA Engineering, Inc.
6974 BROCKTON AVENUE ● SUITE 100
RIVERSIDE, CA 92506
(951) 683-8088 FAX (951) 683-6915
BUSINESS TAX NO.: 41875 EXPIRES: 03-16-06

MARK	REVISIONS	APPR	DATE

DESIGNED BY: ______ DRAWN BY: ______ CHECKED BY: ______

CITY OF RIVERSIDE, CALIFORNIA
PUBLIC WORKS DEPARTMENT

APPROVED BY:	BY:	DATE:
PRINCIPAL ENGINEER	PH	12/27/05
STREET SERVICES		
TRAFFIC DIVISION	[signature]	12/27/05

APPROVED BY: [signature] CITY ENGINEER
DATE 1/3/06

REGIONAL LEARNING CENTER
6511 ARLINGTON AVENUE.
NE'LY CORNER ARLINGTON AVE. & MURRAY ST.
TITLE SHEET
HORIZ. SCALE: AS SHOWN VERT. SCALE: N/A

PW03-0325
ACCOUNT No. –
R-3749
SHEET 1 OF 3
FILE NO. 111-0217

RJ2
INDEXED 1-05-06 GH

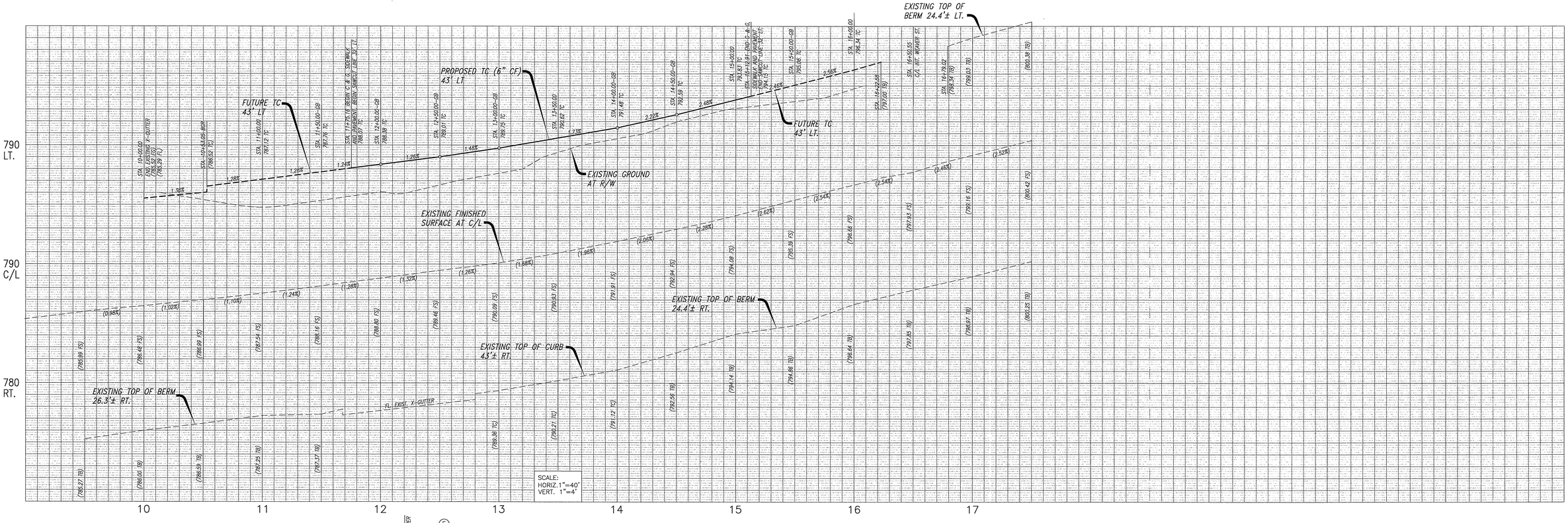

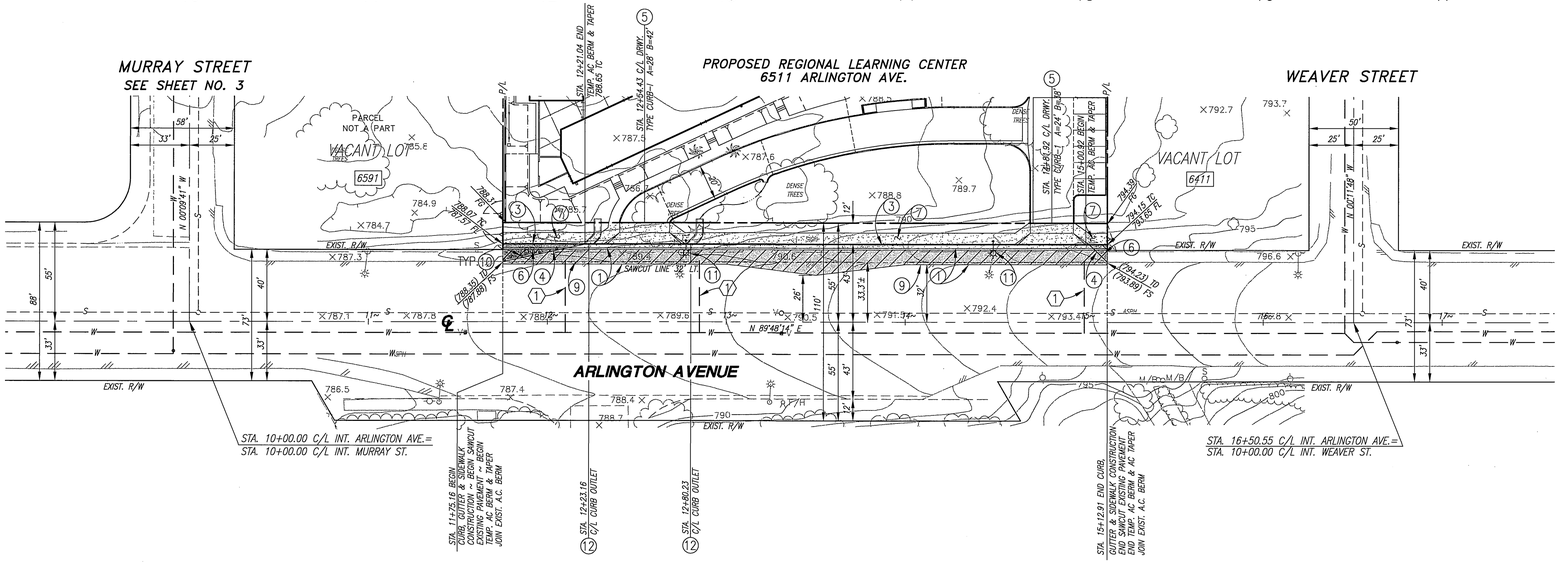

CONSTRUCTION NOTES

1. CONSTRUCT 7" A.C. PAVEMENT OVER 11" A.B. CLASS II PER CITY OF RIVERSIDE STDS. AND SOIL ENGINEER'S RECOMMENDATIONS (ARLINGTON AVE.).
2. CONSTRUCT 5" A.C. PAVEMENT OVER 8" A.B. CLASS II PER CITY OF RIVERSIDE STDS. AND SOIL ENGINEER'S RECOMMENDATIONS (MURRAY STREET).
3. CONSTRUCT 6" CURB AND GUTTER TYPE I PER CITY OF RIVERSIDE STD. DWG. NO. 200.
4. CONSTRUCT TYPE I ASPHALT CONCRETE BERM PER CITY OF RIVERSIDE STD. NO. 250.
5. CONSTRUCT CONCRETE DRIVEWAY APPROACH PER CITY OF RIVERSIDE STD. NO. 302, TYPE CURB–I.
6. CONSTRUCT 5' WIDE (MIN.) TEMPORARY A.C. SIDEWALK AS REQUIRED BY CITY OF RIVERSIDE. JOIN EXISTING AND NEW SIDEWALK AT F.S. GRADE.
7. CONSTRUCT 6.5' WIDE CONCRETE (CURB LINE) SIDEWALK PER CITY OF RIVERSIDE STD. DWG. NO. 325. – ARLINGTON AVE.
8. CONSTRUCT 5' WIDE CONCRETE (PROPERTY LINE) SIDEWALK PER CITY OF RIVERSIDE STD. DWG. NO. 325. – MURRAY ST.
9. SAWCUT & REMOVE EXISTING A.C. BERM AND PAVEMENT.
10. CONSTRUCT TYPE L GUIDE MARKERS PER CITY OF RIVERSIDE STD. DWG. NO. 665. – INSTALL MARKERS AT 10' O.C.
11. RELOCATE EXISTING POWER POLE W/STREET LIGHT BEHIND NEW CURB AND GUTTER PER CITY OF RIVERSIDE STANDARDS.
12. CONSTRUCT CURB OUTLET PER CITY OF RIVERSIDE STD. DWG. NO. 410.

INDICATES EXISTING AC PAVEMENT REMOVAL AND REPLACEMENT

INDICATES NEW AC PAVEMENT

INDICATES TEMPORARY AC WALKWAY

WATER CONSTRUCTION NOTES

1. EXISTING 1" WATER SERVICE TO BE CUT AND PLUGGED BY CITY FORCES.

N

40 20 0 40 80 120

SCALE: 1" = 40'

UNDERGROUND SERVICE ALERT
CALL: TOLL FREE
1–800
227–2600
TWO WORKING DAYS BEFORE YOU DIG

CITY OF RIVERSIDE
PUBLIC UTILITIES DEPARTMENT
ELECTRIC DIVISION

APPROVED BY: 12/20/05 DATE

CITY OF RIVERSIDE
PUBLIC UTILITIES DEPARTMENT
WATER DIVISION

APPROVED BY: 12/1/05 DATE

REGISTERED PROFESSIONAL ENGINEER STEVEN L. RAY 35334 9-30-07 CIVIL STATE OF CALIFORNIA

PREPARED UNDER THE SUPERVISION OF:

STEVEN L. RAY R.C.E. 35334 EXP. 9/30/07 DATE 11-28-05

RHA Engineering, Inc.
6974 BROCKTON AVENUE ● SUITE 100
RIVERSIDE, CA 92506
(951) 683–8088 FAX (951) 683–6915

BUSINESS TAX NO.: 41875 EXPIRES: 03–16–06

MARK	REVISIONS	APPR	DATE

DESIGNED BY: DRAWN BY: CHECKED BY:

CITY OF RIVERSIDE, CALIFORNIA
PUBLIC WORKS DEPARTMENT

APPROVED BY:	BY:	DATE:
PRINCIPAL ENGINEER	PH	12/27/05
STREET SERVICES		
TRAFFIC DIVISION		12/27/05

APPROVED BY: CITY ENGINEER

DATE 1/3/06

REGIONAL LEARNING CENTER

6511 ARLINGTON AVENUE.
NE'LY CORNER ARLINGTON AVE. & MURRAY ST.
ARLINGTON AVENUE
PLAN AND PROFILE SHEET

HORIZ. SCALE: 1"= 40' VERT. SCALE: 1"= 4'

PW03-0325

ACCOUNT No. –

R-3749

SHEET 2 OF 3

FILE NO. 111–0217

R12

INDEXED 1-05-06 GH

File name: R:\SCANDOS\RCDS\RWLC\RWLC_C-7_1.dwg <R14>
Plot date: 11/22/05 at 17:00

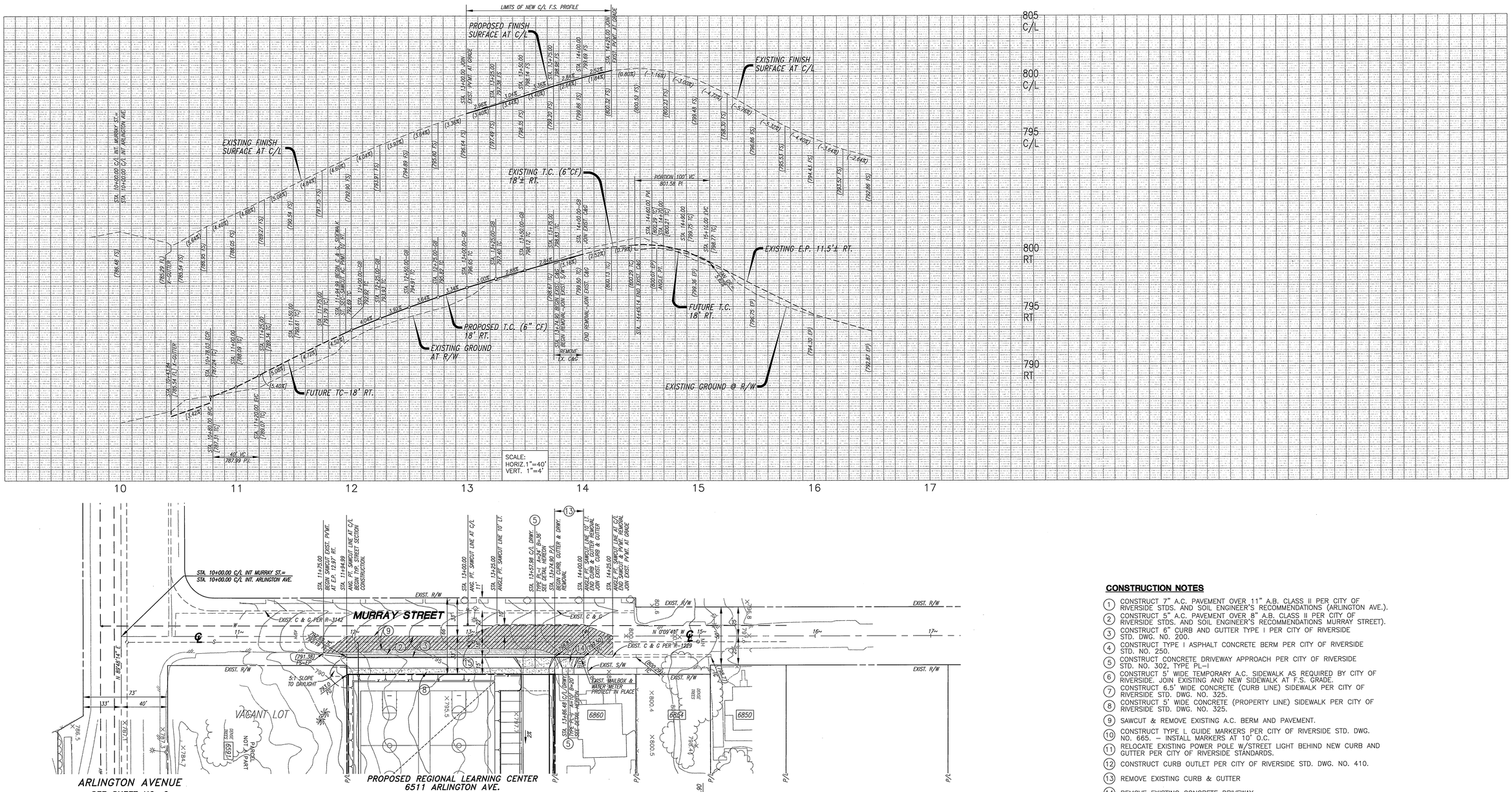

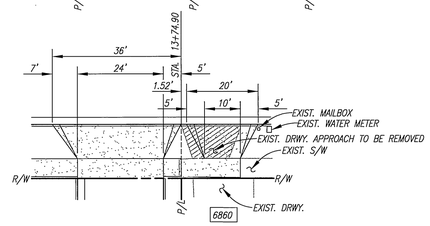

DRIVEWAY DETAIL
1"= 20'

CONSTRUCTION NOTES

1. CONSTRUCT 7" A.C. PAVEMENT OVER 11" A.B. CLASS II PER CITY OF RIVERSIDE STDS. AND SOIL ENGINEER'S RECOMMENDATIONS (ARLINGTON AVE.).
2. CONSTRUCT 5" A.C. PAVEMENT OVER 8" A.B. CLASS II PER CITY OF RIVERSIDE STDS. AND SOIL ENGINEER'S RECOMMENDATIONS MURRAY STREET).
3. CONSTRUCT 6" CURB AND GUTTER TYPE I PER CITY OF RIVERSIDE STD. DWG. NO. 200.
4. CONSTRUCT TYPE I ASPHALT CONCRETE BERM PER CITY OF RIVERSIDE STD. NO. 250.
5. CONSTRUCT CONCRETE DRIVEWAY APPROACH PER CITY OF RIVERSIDE STD. NO. 302, TYPE PL-1
6. CONSTRUCT 5' WIDE TEMPORARY A.C. SIDEWALK AS REQUIRED BY CITY OF RIVERSIDE. JOIN EXISTING AND NEW SIDEWALK AT F.S. GRADE.
7. CONSTRUCT 6.5' WIDE CONCRETE (CURB LINE) SIDEWALK PER CITY OF RIVERSIDE STD. DWG. NO. 325.
8. CONSTRUCT 5' WIDE CONCRETE (PROPERTY LINE) SIDEWALK PER CITY OF RIVERSIDE STD. DWG. NO. 325.
9. SAWCUT & REMOVE EXISTING A.C. BERM AND PAVEMENT.
10. CONSTRUCT TYPE L GUIDE MARKERS PER CITY OF RIVERSIDE STD. DWG. NO. 665. – INSTALL MARKERS AT 10' O.C.
11. RELOCATE EXISTING POWER POLE W/STREET LIGHT BEHIND NEW CURB AND GUTTER PER CITY OF RIVERSIDE STANDARDS.
12. CONSTRUCT CURB OUTLET PER CITY OF RIVERSIDE STD. DWG. NO. 410.
13. REMOVE EXISTING CURB & GUTTER
14. REMOVE EXISTING CONCRETE DRIVEWAY
15. ADJUST SEWER MANHOLE FRAME AND COVER TO GRADE.

INDICATES EXISTING AC PAVEMENT REMOVAL AND REPLACEMENT

INDICATES NEW AC PAVEMENT

N

40 20 0 40 80 120

SCALE: 1" = 40'

UNDERGROUND SERVICE ALERT
CALL: TOLL FREE
1-800
227-2600
TWO WORKING DAYS BEFORE YOU DIG

CITY OF RIVERSIDE
PUBLIC UTILITIES DEPARTMENT
ELECTRIC DIVISION
APPROVED BY: 12/20/05 DATE

CITY OF RIVERSIDE
PUBLIC UTILITIES DEPARTMENT
WATER DIVISION
APPROVED BY: 12/1/05 DATE

REGISTERED PROFESSIONAL ENGINEER STEVEN L. RAY 35334 9-30-07 CIVIL STATE OF CALIFORNIA

PREPARED UNDER THE SUPERVISION OF:
STEVEN L. RAY R.C.E. 35334 EXP. 9/30/07 DATE 11-28-05

RHA Engineering, Inc.
6974 BROCKTON AVENUE ● SUITE 100
RIVERSIDE, CA 92506
(951) 683-8088 FAX (951) 683-6915
BUSINESS TAX NO.: 41875 EXPIRES: 03-16-06

MARK	REVISIONS	APPR	DATE

DESIGNED BY: DRAWN BY: CHECKED BY:

CITY OF RIVERSIDE, CALIFORNIA
PUBLIC WORKS DEPARTMENT

APPROVED BY:	BY:	DATE:
PRINCIPAL ENGINEER		01/27/06
STREET SERVICES		
TRAFFIC DIVISION		01/27/06

APPROVED BY: CITY ENGINEER
DATE 1/30/06

REGIONAL LEARNING CENTER
6511 ARLINGTON AVENUE.
NE'LY CORNER ARLINGTON AVE. & MURRAY ST.
MURRAY STREET
PLAN AND PROFILE SHEET
HORIZ. SCALE: 1"= 40' VERT. SCALE: 1"= 4'

PW03-0325
ACCOUNT No. –
R-3749
SHEET 3 OF 3
FILE NO. 111-0217

INDEXED 1-05-06

File name: R:\SCANDS\R0261\Rlvc\RlvcC_07-2.dwg <R14>
Plot date: 11/22/05 at 17:00