RIVERSIDE CALIFORNIA

CITY OF RIVERSIDE — INCORPORATED 1883

PUBLIC WORKS DEPARTMENT

VICTORIA AVENUE MEDIAN IMPROVEMENTS

(LA SIERRA AVE TO 350' NE'LY OF BOUNDARY LN)

CONSTRUCTION NOTE LEGEND

- NUMBERS ABOVE 100 IN A HEXAGON ON THE PLAN REFER TO THE RESPECTIVE STANDARD DRAWING AND SHALL BE CONSTRUCTED ACCORDINGLY, UNLESS MODIFICATIONS ARE NOTED ON THE PLAN. ANY NUMBER SHOWN BELOW THE STANDARD DRAWING NUMBER INDICATES THE SPECIFIC ALTERNATE TO BE CONSTRUCTED.
- C / S1 — CONSTRUCT STRUCTURAL SECTION OF 0.33' DGAC OVER 0.60' CMB (T.I.=8, R-VALUE=50)
- G2 — COLD MILLING – 10' WIDE AT A UNIFORM DEPTH OF 0.1'
- OL — FEATHER OVERLAY EXISTING PAVEMENT WITH VARIABLE THICKNESS DGAC WHERE NEW PAVEMENT JOINS THE EXISTING.
- PIP — PROTECT IN PLACE (DESCRIPTION PER PLAN).
- REL / PLM — RELOCATE PALM TREES WITHIN PROJECT AREA / ADJACENT PROPERTIES.
- REL / MB — RELOCATE MAILBOX
- REM / GR — REMOVE GAURDRAIL AND SIGN
- ADJ / CV — ADJUST WATER GATE VALVE COVER TO GRADE
- ADJ / MH — ADJUST MANHOLE COVER TO GRADE.
- REL / SGN — RELOCATE EXISTING SIGN PER STRIPING AND SIGNING PLAN
- M 250 / III — CITY OF RIVERSIDE STANDARD DRAWING 250 – AC BERM MODFICATION: CONSTURCT TO PROVIDE 2' WIDTH AND 0.5' HIEGHT. TRANSITION FROM 8" BERM WITHIN 2' OUTSIDE DRIVEWAY WIDTH.
- M 431 — CITY OF RIVERSIDE STANDARD DRAWING 431 – MANHOLE EX MODFICATION: INSIDE WIDTH OF MANHOLE SHALL BE CHANGED FROM 3.5' TO 6'.
- JS 226 — RCFC & WCD STANDARD DRAWING JS 226 – JUNCTION STRUCTURE NO. 1 (SIDE INLET TO BOX)
- CB 110 — RCFC & WCD STANDARD DRAWING CB 110 – CONCRETE DROP INLET
- M CB 108 — RCFC & WCD STANDARD DRAWING CB 108 – CONCRETE DROP INLET MODFICATION: DEPTH FROM OPENING TO TOP OF PIPE ENCASEMENT SHALL NOT BE LESS THAN 0.4'. MODFICATION: CONSTRUCT 1' CONCRETE APRON AROUND INLET (4" THICK ON COMPACTED NATIVE)
- (1) INSTALL STREET LIGHTS AND CONDUIT PER STREET LIGHTING PLAN.
- (2) REMOVE ORANGE TREES (SEE PLAN FOR AMOUNT)
- (3) REMOVE OR CONSTRUCT PAVEMENT AS NECESSARY TO CONSTRUCT MEDIAN BERM ADJACENT TO EXISTING PAVEMENT.
- (4) GRADE MEDIAN TO CREATE EARTHEN SWALE PER TYPICAL SECTIONS AND ELEVATIONS SHOWN. SCARIFY 2' MIN OF SOIL WITHIN MEDIAN.
- (5) COVER OVER EXISTING CHANNEL SHALL NOT BE REDUCED
- (6) CONSTRUCT STORM DRAIN PIPE PER PLAN D-794.
- (7) GRADE DRAINAGE SWALE PER DETAIL SHOWN ON SHEET 2.
- (8) GRADE DRAINAGE SWALE PER DETAIL SHOWN ON SHEET 2.
- (9) GRADE AS NECESSARY TO DIRECT RUNOFF TOWARD PROPOSED INLET.
- (10) REMOVE AND RECONSTRUCT AC BERM TO CONSTRUCT STORM DRAIN FACILITIES.
- (11) DESIGN AND INSTALL IRRIGATION SYSTEM PER DETAIL SHOWN ON SHEET 2.
- (12) REMOVE EXISTING TREE (CLASS PER PLAN)
- (13) MODIFY EXISTING IRRIGATION SYSTEM TO ADEQUATELY COVER THE ADDITIONAL MEDIAN AREA.
- (14) RECONSTRUCT FENCE IN KIND, 6" BEHIND PROPERTY LINE (TYPE PER PLAN)
- (15) REMOVE ALL EXISTING IMPROVEMENTS AS NECESSARY TO CONSTRUCT PROPOSED IMPROVEMENTS, UNLESS OTHERWISE NOTED.
- (16) INSTALL BACKFLOW DEVICE PER DETAIL NO. 4 SHOWN ON SHEET 10.
- (17) INSTALL GATE VALVE PER DETAILS SHOWN ON SHEET 10.
- (18) CONNECT TO THE PROPOSED UNDERGROUND ELECTRICAL FACILITY TO SERVE THE IRRIGATION CONTROLLER SHOWN ON THE PLAN PER DETAIL SHOWN ON SHEET 10 AND LIGHTING PLANS.
- (19) INSTALL IRRIGATION CONTROLLER PER DETAIL NO. 6 SHOWN ON SHEET 10
- (20) PAINT OVER THE EXISTING STRIPING WITH BLACK PAINT AND PLACE EMULSSION-AGGREGATE SLURRY OVER THE ENTIRE EXISTING PAVEMENT ON VICTORIA AVE WITHIN THE LIMITS OF THE IMPROVEMENTS.
- (21) CONSTRUCT BERM ADJACENT TO EXISTING PAVEMENT WITH EMULSION-AGGREGATE SLURRY (AND WITH MINOR WIDENING WHERE NECESSARY) PROFILE SHOWN ONLY FOR BERM WITHIN LARGE PAVEMENT CONSTRUCTION AREAS.
- (22) CONSTRUCT AC DRIVEWAY WITH FOUR 8" PIPE CULVERTS ENCASED IN AC PER DETAIL SHOWN ON SHEET 2. WIDTH AND STATION PER PLAN. ADDITIONAL AC AND PIPE REQUIRED TO EXTEND JOIN PROPOSED SWALE.
- E — ELECTRICAL POWER POLE AND OTHER FACILITIES TO BE RELOCATED BY THE RIVERSIDE PUBLIC UTILITIES DEPT.
- T — TELEPHONE FACILITIES TO BE RELOCATED, IF NECESSARY, BY AT&T (SBC). OTHERWISE, PROTECT IN PLACE.
- W1 — WATER METER TO BE RELOCATED AND LATERAL TO BE EXTENDED BY CITY FORCES.
- W2 — WATER LINE CROSSING AT PROPOSED STORM DRAIN TO BE MODIFIED BY CITY FORCES.
- W3 — 2" IRRIGATION LATERAL AND 1-1/2" WATER METER (BY CITY FORCES, STATION PER PLAN). WATER SERVICE SUMMARY TABLE SHOWN ON SHEET NO. 8 SHALL BE COMPLETED FOR EACH POINT OF CONNECTION.
- G — GAS LINE CROSSING AT PROPOSED STORM DRAIN TO BE MODIFIED BY SOUTHERN CALIFORNIA GAS COMPANY.

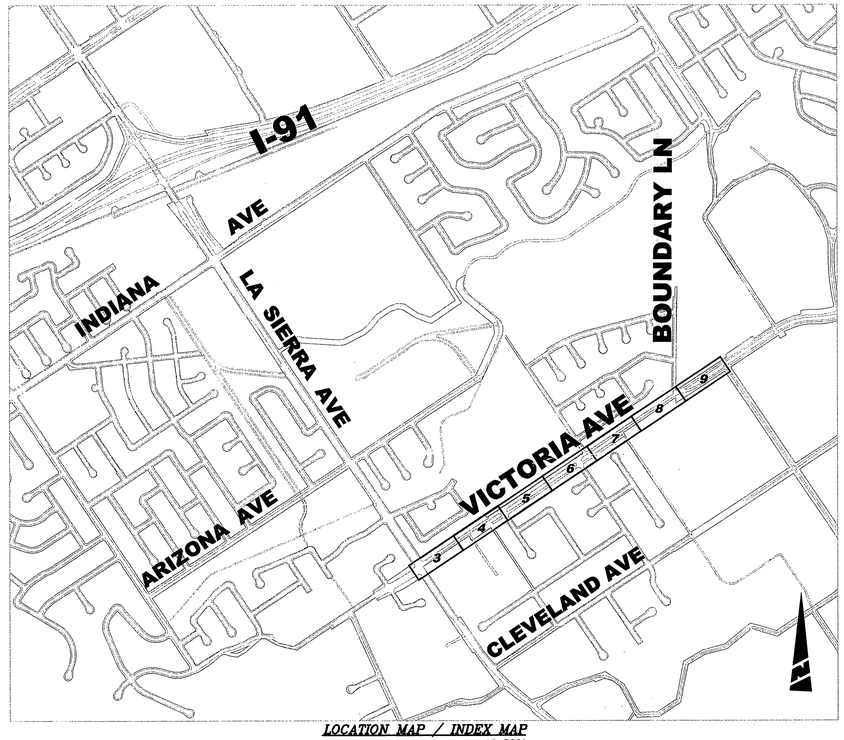

LOCATION MAP / INDEX MAP
1"=800'

EXISTING TOPOGRAPHY:

- SANITARY SEWER M.H.
- STORM DRAIN M.H.
- WATER GATE VALE
- ELECTRIC M.H.
- TELEPHONE M.H.
- WATER METER
- FIRE HYDRANT
- IRRIGATION BOX
- BLOW-OFF VALVE
- TRAFFIC SIGN
- POWER POLE
- GUY ANCHOR
- STREET LIGHT ON MAST ARM
- EXISTING UTILITY RISER
- PALM TREE
- MISC. TREE
- EXIST BUILDING
- TOP OF SLOPE
- TOE OF SLOPE
- DIRECTION OF DRAINAGE FLOW
- EDGE OF PAVEMENT
- EXISTING TREE LINE
- EXISTING FENCE
- EXISTING WALL
- EXISTING SIGNS

CONSTRUCTION LEGEND:

- CONSTRUCT STRUCTURAL SECTION OF DGAC OVER CRUSHED MISCELLANEOUS BASE (DESCRIPTION PER PLAN).
- OVERLAY EXISTING PAVEMENT WITH VARIABLE THICKNESS DGAC. FEATHER OVERLAY EXISTING PAVEMENT ADJANCE TO JOIN AREAS.
- CONSTRUCT CONCRETE (DESCRIPTION PER PLAN)
- PROPOSED WHEELCHAIR RAMP WITH SCORING (SEE PLAN FOR TYPE)
- PROPOSED STORM DRAIN FACILITIES
- STREET CENTERLINE
- STREET R/W OR PRIVATE PROPERTY LINE
- EASEMENT LINE
- (8"W) TYPICAL EXISTING UTILITY (SEE PLAN FOR VARIOUS UTILITIES)

TC	TOP OF CURB	STA	STREET STATION
EP	EDGE OF PAVEMENT	S'LY	SOUTHERLY
FL	FLOWLINE	E'LY	EASTERLY
FS	FINISHED SURFACE	BCR	BEGIN CURB RETURN
CL	CENTERLINE	BCR	END CURB RETURN
GB	GRADE BREAK	RGT	RIGHT
AC	ASPHALT CONCRETE	C&G	CURB AND GUTTER
PCC	PORTLAND CONCRETE CEMENT	R/W	RIGHT OF WAY

STREET IMPROVEMENT PLANS R3758 SHEET INDEX:

SHEET NO.	DESCRIPTION
1	NOTES, LEGEND, & TITLE SHEET
2	TYPICAL SECTION, DETAILS, CURVE DATA
3	STREET IMPROVEMENTS (STA 30+00 TO STA 35+00)
4	STREET IMPROVEMENTS (STA 35+00 TO STA 41+00)
5	STREET IMPROVEMENTS (STA 41+00 TO STA 47+00)
6	STREET IMPROVEMENTS (STA 47+00 TO STA 53+00)
7	STREET IMPROVEMENTS (STA 53+00 TO STA 59+00)
8	STREET IMPROVEMENTS (STA 59+00 TO STA 65+00)
9	STREET IMPROVEMENTS (STA 65+00 TO STA 68+00)
10	IRRIGATION NOTES AND DETAILS

STREET LIGHTING PLANS 050007-4 SHEET INDEX:

SHEET NO.	DESCRIPTION
1-2	STREET LIGHT INSTALLATION

UNDERGROUND ELECTRIC PLANS 050006-21 SHEET INDEX:

SHEET NO.	DESCRIPTION
1-3	UNDERGROUND ELECTRIC IMPROVEMENTS

SIGNAL MODIFICATION PLAN X-351B SHEET INDEX:

SHEET NO.	DESCRIPTION
1	SIGNAL PLAN

STRIPING IMPROVEMENT PLANS XL-508 SHEET INDEX:

SHEET NO.	DESCRIPTION
1-2	STRIPING PLAN

STORM DRAIN IMPROVEMENT PLANS D-794 SHEET INDEX:

SHEET NO.	DESCRIPTION
1	NOTES, DETAILS AND TITLE SHEET
2	PLAN, PROFILES, AND INLETS

GENERAL NOTES:

1. CONSTRUCTION SHALL BE IN ACCORDANCE WITH THE CITY OF RIVERSIDE STANDARD DRAWINGS AND STANDARD SPECIFICATIONS FOR PUBLIC WORKS CONSTRUCTION, 2003 EDITION.
2. ALL ELEVATIONS SHOWN IN THE PLAN VIEW SHALL BE STAKED IN THE FIELD, EXCEPT FOR ELEVATIONS SHOWN IN PARENTHESIS WHICH DENOTE EXISTING GRADES.
3. CUT AND FILL SLOPES SHALL BE 2:1 OR FLATTER UNLESS OTHERWISE SHOWN ON THE PLAN.
4. EXISTING UTILITIES SHOWN ON THE PLANS, ARE PLOTTED FROM UTILITY RECORDS THE CONTRACTOR IS REQUIRED TO TAKE DUE PRECAUTIONARY MEASURES TO LOCATE AND PROTECT ALL UTILITIES WHETHER OR NOT SHOWN ON THESE PLANS.

ENGINEER IN RESPONSIBLE CHARGE
MICHAEL KATUSIAN
R.C.E. No. 36686 expires 6/30/06
DATE 3/9/06

REGISTERED PROFESSIONAL ENGINEER — MICHAEL KATUSIAN — No. 36686 — Exp. 6-30-06 — CIVIL — STATE OF CALIFORNIA

MARK	REVISIONS	APPR.	DATE

DESIGNED BY F.L. DRAWN BY F.L. CHECKED BY M.K.

CITY OF RIVERSIDE, CALIFORNIA
PUBLIC WORKS DEPARTMENT

APPROVED BY	BY	DATE
PRINCIPAL ENGINEER	PH	3/10/06
CONSTRUCTION ADMIN.	DC	3/10/06
SURVEYOR	[illegible]	3/10/06
STREET SERVICES	[illegible]	3/10/06
TRAFFIC ENGINEER	[illegible]	3/10/06

APPROVED BY [signature] CITY ENGINEER
DATE 3/15/06

VICTORIA AVENUE MEDIAN IMPROVEMENTS
(FROM LA SIERRA AVENUE TO 350' NE'LY OF BOUNDARY LANE)
NOTES, LEGEND, & TITLE SHEET

HORIZ. SCALE: N/A VERT. SCALE: N/A

ACCOUNT NO. 9542330214-440302
WORK ORDER NO. 0501803

R-3758

SHEET 1 OF 10

FILE NO.

G:\COMMON\MIKE'S GROUP\PROJECTS\STREETS\VICTORIA AVE - LA SIERRA TO BOUNDARY\DRAWINGS\PLANS\IMPROVEMENTS\STREET\R3758-01.DWG 03/09/06 2:04 pm

INDEXED 6-12-06 [illegible]

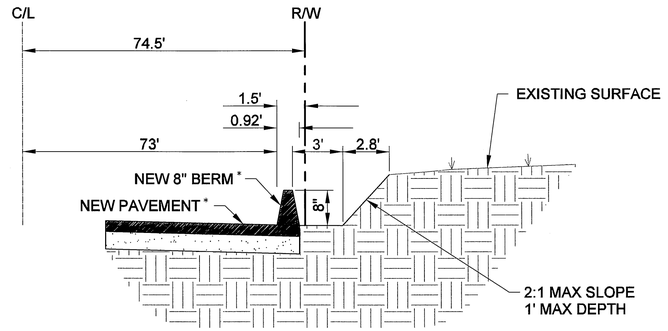

7 DRAINAGE SWALE
SCALE: NTS

* NEW IMPROVEMENTS TO BE CONSTRUCTED AS SHOWN ON THE STREET IMPROVVEMENT PLANS (PLAN NO. R-3758).

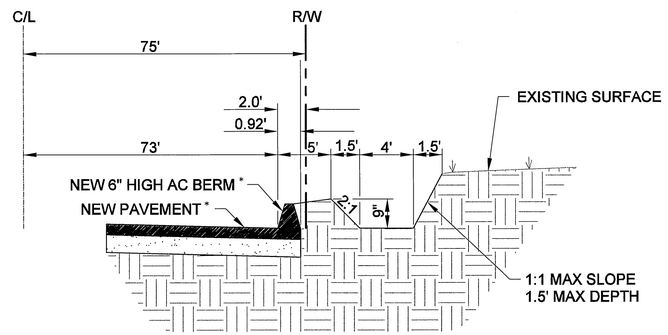

8 DRAINAGE SWALE
SCALE: NTS

* NEW IMPROVEMENTS TO BE CONSTRUCTED AS SHOWN ON THE STREET IMPROVVEMENT PLANS (PLAN NO. R-3758).

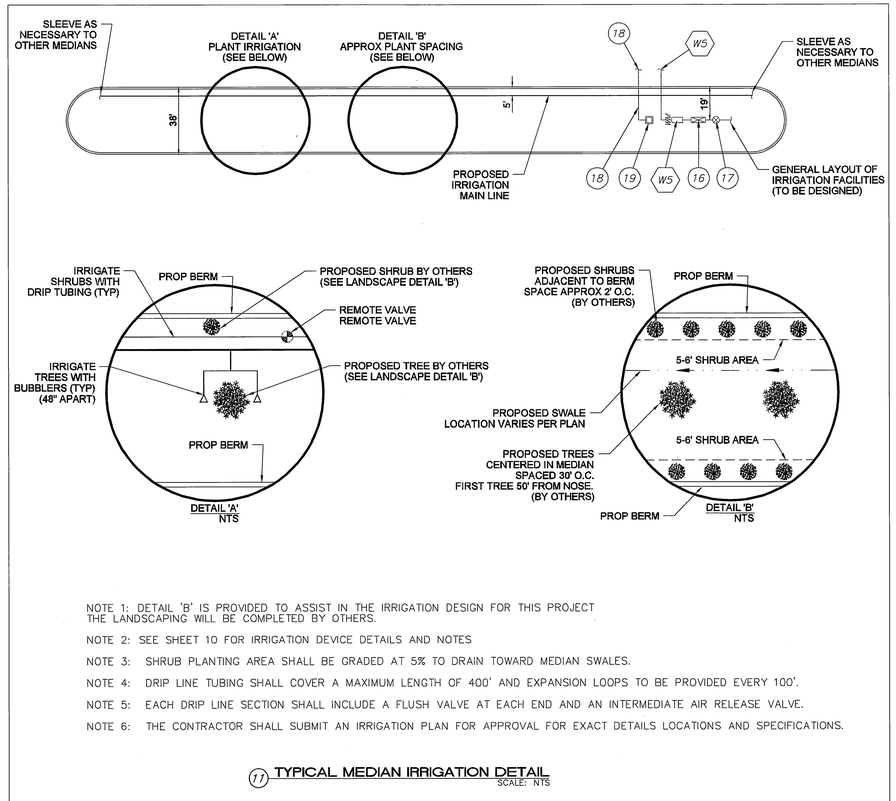

NOTE 1: DETAIL 'B' IS PROVIDED TO ASSIST IN THE IRRIGATION DESIGN FOR THIS PROJECT THE LANDSCAPING WILL BE COMPLETED BY OTHERS.

NOTE 2: SEE SHEET 10 FOR IRRIGATION DEVICE DETAILS AND NOTES

NOTE 3: SHRUB PLANTING AREA SHALL BE GRADED AT 5% TO DRAIN TOWARD MEDIAN SWALES.

NOTE 4: DRIP LINE TUBING SHALL COVER A MAXIMUM LENGTH OF 400' AND EXPANSION LOOPS TO BE PROVIDED EVERY 100'.

NOTE 5: EACH DRIP LINE SECTION SHALL INCLUDE A FLUSH VALVE AT EACH END AND AN INTERMEDIATE AIR RELEASE VALVE.

NOTE 6: THE CONTRACTOR SHALL SUBMIT AN IRRIGATION PLAN FOR APPROVAL FOR EXACT DETAILS LOCATIONS AND SPECIFICATIONS.

11 TYPICAL MEDIAN IRRIGATION DETAIL
SCALE: NTS

CURVE DATA TABLE					
◇	DELTA	RADIUS	LENGTH	TANGENT	REMARK
1	89°41'42"	35.00'	54.79'	34.81'	LA SIERRA AVE CURB RETURN TC
2	6°50'34"	1000.00'	119.43'	59.79'	N'LY MEDIAN REVERSE TAPER FL
3	6°50'34"	1000.00'	119.43'	59.79'	N'LY MEDIAN REVERSE TAPER FL
4	180°00'00"	19.00'	59.69'	--	E'LY MEDIAN NOSE FL
5	180°00'00"	19.00'	59.69'	--	W'LY MEDIAN NOSE FL
6	90°00'00"	30.00'	47.12'	30.00'	MILLSWEET PL CURB RETURN FL
7	90°00'00"	30.00'	47.12'	30.00'	MILLSWEET PL CURB RETURN FL
8	180°00'00"	19.00'	59.69'	--	E'LY MEDIAN NOSE FL
9	180°00'00"	19.00'	59.69'	--	W'LY MEDIAN NOSE FL
10	180°00'00"	19.00'	59.69'	--	E'LY MEDIAN NOSE FL
11	180°00'00"	19.00'	59.69'	--	W'LY MEDIAN NOSE FL
12	180°00'00"	19.00'	59.69'	--	E'LY MEDIAN NOSE FL
13	180°00'00"	16.50'	51.84'	--	W'LY MEDIAN NOSE FL

NOTE: SEE PLANS FOR LOCATIONS

A	TBD	"A" CONTROLLER: SHALL BE CALSENSE ET2000-??(# OF STATIONS)-LR-RR-G-RB, WITH LR-DOME-RR ANTENNA, TP-1 BOARD, AND TP-110 LINE SURGE PROTECTOR. WHEN TWO CONTROLLERS USE ONE SINGLE SOURCE OF WATER, THE FL-SOFTWARE IS REQUIRED AT EACH CONTROLLER. SHALL BE INSTALLED IN A MYERS POWER PRODUCTS CAT. NO. MEUG22X-ENC-RIV S.S. ENCLOSURE TO SUPPORT ALL MATERIALS REQUIRED BY CITY AGENCIES, OR EQUAL THAT IS COMPATIBLE WITH CITY'S IRRIGATION CENTRAL CONTROL SYSTEM.
B	TBD	"B" CONTROLLER: SHALL BE CALSENSE ET2000-??(# OF STATIONS)-LR-RR, WITH LR-DOME-RR ANTENNA, TP-1 BOARD, AND TP-110 LINE SURGE PROTECTOR. WHEN TWO CONTROLLERS USE ONE SINGLE SOURCE OF WATER, THE FL-SOFTWARE IS REQUIRED AT EACH CONTROLLER. SHALL BE INSTALLED IN A MYERS POWER PRODUCTS CAT. NO. MEUG22X-ENC-RIV S.S. ENCLOSURE TO SUPPORT ALL MATERIALS REQUIRED BY CITY AGENCIES, OR EQUAL THAT IS COMPATIBLE WITH CITY'S IRRIGATION CENTRAL CONTROL SYSTEM.
M	TBD	WATER METER: SIZE AS APPROVED ON PLANS.
FM	TBD	FLOW METER: SHALL BE TYPE APPROVED BY THE CONTROLLER MANUFACTURE, SO AS TO ENSURE CERTIFICATION OF THE CONTROLLER.
	TBD	MASTER VALVE: SUPERIOR TYPE BRASS, MODEL NUMBER 950DW LINE SIZE, NON-REGULATING.
	TBD	BACK FLOW: FEBCO 825YA TO INCLUDE BRASS FITTINGS, Y-STRAINER, S.S. ENCLOSURE LOCKABLE WITH PAD LOCK, REGULATING, 140MESH MINIMUM DISK FILTER.
	TBD	ISOLATION VALVES: SHALL BE NIBCO CLASS 125 BRONZE MODEL #T-113-K, GATE VALVE, OR EQUAL.
	TBD	REMOTE CONTROL VALVES: SHALL BE BRASS SUPERIOR #950-DWPRS, REGULATING, OR EQUAL
	1"	QUICK COUPLERS: SHALL BE RAIN BIRD MODEL #44-LRC, BRASS OR EQUAL.
	TBD	MAIN LINE/CONSTANT PRESSURE PIPE: SHALL BE CL-315, PVC
	TBD	LATERAL LINE/INTERMITTENT PIPE: SHALL BE SCH 40, PVC. BROWNLINE UVR FITTINGS AND PIPE ARE REQUIRED WHEN INSTALLED ABOVE GRADE.
	2x LINE SIZE	SLEEVING MAIN LINE/CONSTANT PRESSURE: SHALL BE CLASS 315, PVC
	2" MIN	LOW VOLTAGE WIRE SLEEVING: SHALL BE SCH 40, PVC
	AS APPROVED	DRIP TUBING: NETAFIM DRIP TUBING MODEL # TLDL-9-24-10, NON PRESSURE COMPENSATING, OR EQUAL, WITH FLUSHING CAPS, AIR RELEASE VALVES, PRESSURE INDICATORS, ETC.
	1/2"	BUBBLERS: PRESSURE COMPENSATING BUBBLER 1GPM. TO INSTALLED IN A 4" PVC PERFORATED PIPE, WITH A 4" PVC CAP.
	TBD	ET GAUGE: SHALL BE TYPE EQUAL TO MANUFACTURE.
	LINE SIZE	ARV'S: SHALL BE SAME MANUFACTURED BY DRIP TUBING MANUFACTURE.
	LINE SIZE	FLUSH VALVES: SAME MANUFACTURE AS DRIP TUBING
	TBD	SPARE WIRE BOX: SHALL BE LOCKABLE CONCRETE BOX WITH NON-HINGED, CAST IRON LID, WITH TWO ELECTRICAL SWEEPS, AND THREE FOOT LOOP OF SPARE WIRE FOR EACH STATION WITH WIRE CONNECTORS.
	LINE SIZE	FILTER: FILTER SHALL BE A MINIMUM 140MESH, FLUSHABLE.
	TBD	FERTILIZER INJECTOR: SHALL BE SIZED TO MANUFACTURE RECOMMENDATIONS, INSTALLED IN A CONCRETE VALVE BOX, WITH C.I. LID MARKED "FI", ABLE TO ACCOMMODATE THE FLOW NEEDED FOR EACH STATION. EQUAL TO ZEE-FLO FERTILIZING SYSTEMS, (866) 393-5601

IRRIGATION LEGEND DETAIL

NOTE: PLANS PREPARED FOR APPROVAL SHALL UTILIZE THIS LEGEND.

TYPICAL SECTION:

NOTE: LOCATION OF ITEMS TO BE CONSTRUCTED VARY. SEE PLAN FOR SPECIFIC LOCATIONS.

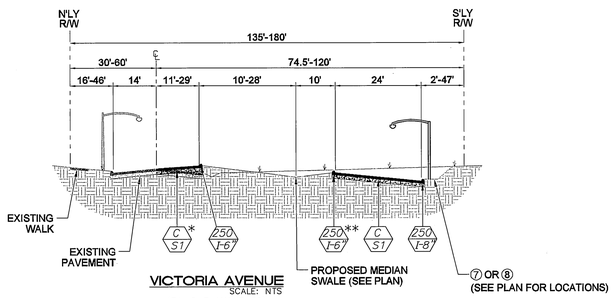

VICTORIA AVENUE
SCALE: NTS
(T.I.=8, R-VALUE=50)
STA 30+50 TO 36+50

* ENTIRE EXISTING PAVEMENT WILL BE REMOVED AND RECONSTRUCTED BETWEEN STA 30+50 TO STA 31+50.

** PROVIDE 2' OPENING AS DESCRIBED ON OTHER TYPICAL SECTION BUT AT STATION 31+10 AND ON THE S'LY SIDE OF THE MEDIAN.

TYPICAL SECTION:

NOTE: LOCATION OF ITEMS TO BE CONSTRUCTED VARY. SEE PLAN FOR SPECIFIC LOCATIONS.

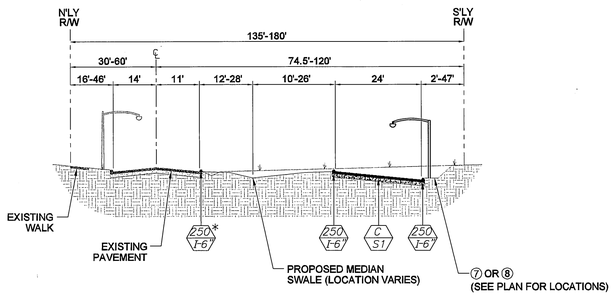

VICTORIA AVENUE
SCALE: NTS
(T.I.=8, R-VALUE=50)
STA 36+50 TO 66+00

* PROVIDE 2' BERM OPENINGS (NO BERM) EVERY 50' BETWEEN STATIONS 37+00 AND 66+00 ON N'LY SIDE OF THE MEDIAN. CONSTRUCT 2'W x 3'L OF ADDITIONAL PAVEMENT (BEYOND BERM) WITHIN THE MEDIAN AT THESE LOCATIONS

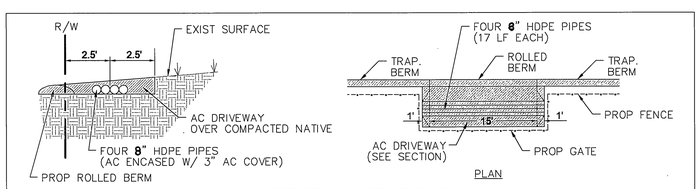

22 AC DRIVEWAY WITH PIPE CULVERT
SCALE: NTS

ENGINEER IN RESPONSIBLE CHARGE
MICHAEL KATUSIAN
R.C.E. No. 36686 expires 6/30/06
DATE 3/9/06

REGISTERED PROFESSIONAL ENGINEER MICHAEL KATUSIAN No. 36686 Exp. 6-30-06 CIVIL STATE OF CALIFORNIA

MARK	REVISIONS	APPR.	DATE

DESIGNED BY FL DRAWN BY FL CHECKED BY MK

CITY OF RIVERSIDE, CALIFORNIA
PUBLIC WORKS DEPARTMENT

APPROVED BY	BY	DATE
PRINCIPAL ENGINEER		3/16/06
CONSTRUCTION ADMIN.		3/16/06
SURVEYOR		3/16/06
STREET SERVICES		3/16/06
TRAFFIC ENGINEER		3/16/06

APPROVED BY
CITY ENGINEER
DATE 3/15/06

VICTORIA AVENUE
MEDIAN IMPROVEMENTS
(FROM LA SIERRA AVENUE TO 350' NE'LY OF BOUNDARY LANE)
TYPICAL SECTION, DETAILS, CURVE DATA

HORIZ. SCALE: NA VERT. SCALE: NA

ACCOUNT. NO. 9542330214-440302
WORK ORDER. NO. 0501803

R-3758

SHEET 2 OF 10

FILE NO

INDEXED 6-12-06 [illegible]

G:\COMMON\MIKE'S GROUP\PROJECTS\STREETS\VICTORIA AVE - LA SIERRA TO BOUNDARY\DRAWINGS\PLANS\IMPROVEMENTS\STREET\R3758-02.DWG 03/09/06 2:01 pm

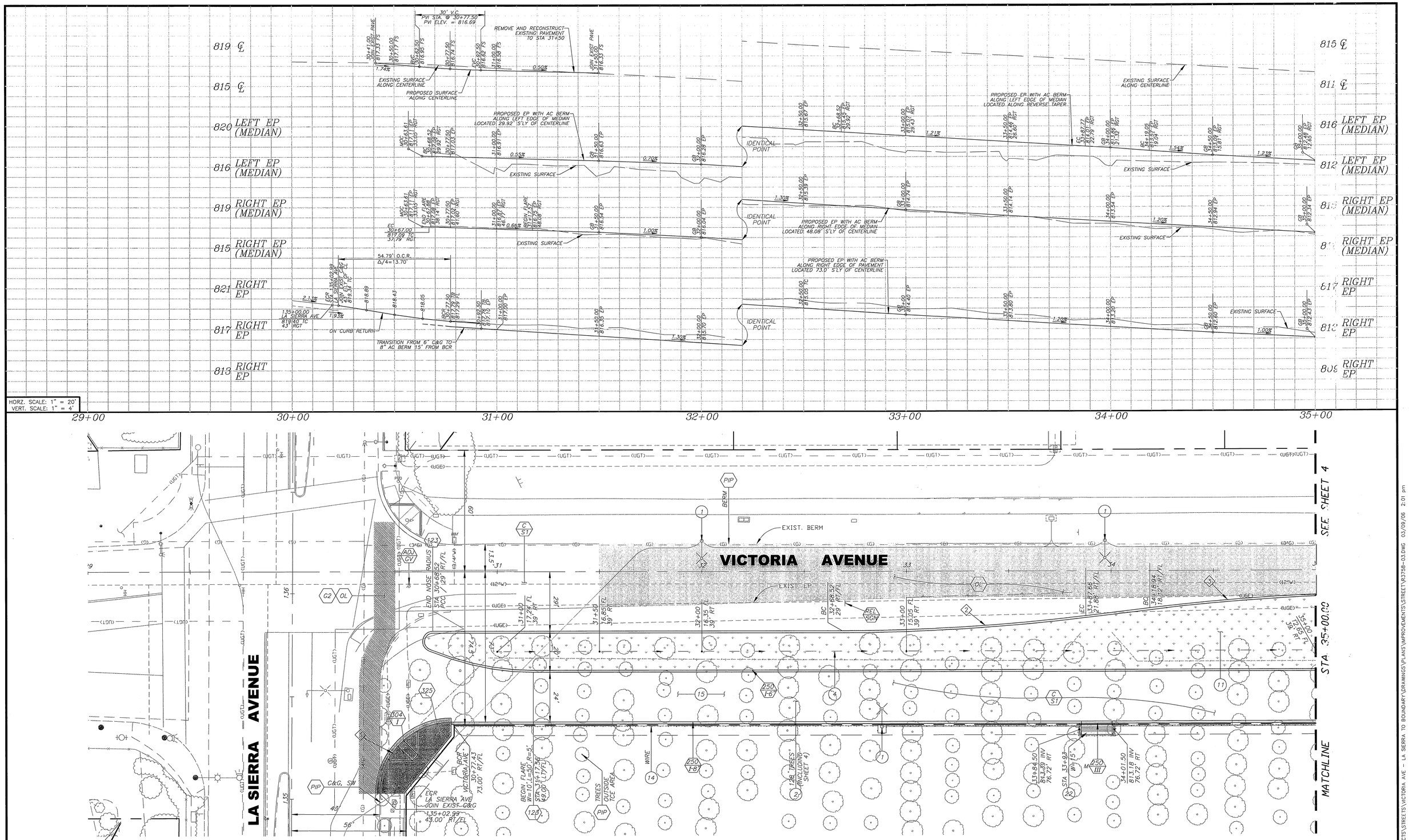

BENCHMARK E2-P2

CHISELED SQUARE ON THE TOP OF CURB AT THE WESTERLY END OF A CATCH BASIN FRONTING THE SOUTHERLY CURB OF INDIANA AVENUE AT THE SOUTHEAST CORNER OF INDIANA AVENUE AND FILLMORE STREET.

ELEVATION: 738.410

ENGINEER IN RESPONSIBLE CHARGE

MICHAEL KATUSIAN

R.C.E. No. 36686 expires 6/30/06

DATE 3/9/06

REGISTERED PROFESSIONAL ENGINEER MICHAEL KATUSIAN No. 36686 Exp. 6-30-06 CIVIL STATE OF CALIFORNIA

MARK	REVISIONS	APPR.	DATE

DESIGNED BY EL DRAWN BY EL CHECKED BY MK

CITY OF RIVERSIDE, CALIFORNIA
PUBLIC WORKS DEPARTMENT

APPROVED BY	BY	DATE
PRINCIPAL ENGINEER	PK	3/10/06
CONSTRUCTION ADMIN.	DC	3/14/06
SURVEYOR	[illegible]	3/14/06
STREET SERVICES	[illegible]	3/15/06
TRAFFIC ENGINEER	SC	3/15/06

APPROVED BY [signature] CITY ENGINEER

DATE 3/15/06

VICTORIA AVENUE
MEDIAN IMPROVEMENTS
(FROM LA SIERRA AVENUE TO 350' NE'LY OF BOUNDARY LANE)
STA 30+00 TO STA 35+00

HORIZ. SCALE: 1"=20' VERT. SCALE: 1"=4'

ACCOUNT NO. 9542330214-440302
WORK ORDER NO. 0501803

R-3758

SHEET 3 OF 10

FILE NO.

INDEXED 6-12-06 LH

G:\COMMON\MIKE'S GROUP\PROJECTS\STREETS\VICTORIA AVE - LA SIERRA TO BOUNDARY\DRAWINGS\PLANS\IMPROVEMENTS\STREET\R3758-03.DWG 03/09/06 2:01 pm

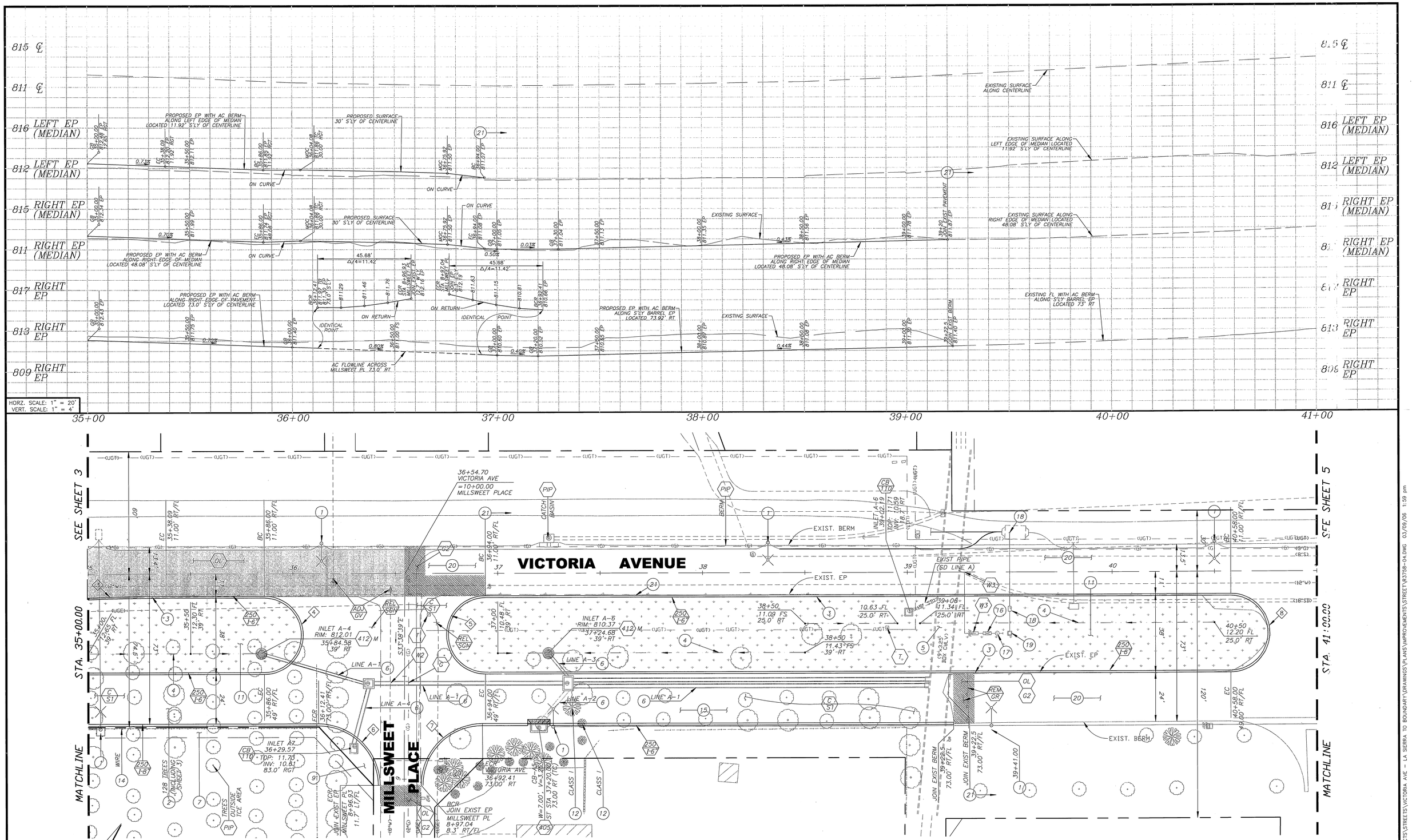

BENCHMARK E2-P2

CHISELED SQUARE ON THE TOP OF CURB AT THE WESTERLY END OF A CATCH BASIN FRONTING THE SOUTHERLY CURB OF INDIANA AVENUE AND FILLMORE STREET.

ELEVATION: 738.410

ENGINEER IN RESPONSIBLE CHARGE

MICHAEL KATUSIAN
R.C.E. No. 36686 expires 6/30/06
DATE 3/9/06

REGISTERED PROFESSIONAL ENGINEER MICHAEL KATUSIAN No. 36686 Exp. 6-30-06 CIVIL STATE OF CALIFORNIA

MARK	REVISIONS	APPR.	DATE

DESIGNED BY F.L. DRAWN BY F.L. CHECKED BY M.K.

CITY OF RIVERSIDE, CALIFORNIA
PUBLIC WORKS DEPARTMENT

APPROVED BY	BY	DATE
PRINCIPAL ENGINEER		3/30/06
CONSTRUCTION ADMIN.		3/30/06
SURVEYOR		3/30/06
STREET SERVICES		3/30/06
TRAFFIC ENGINEER		3/30/06

APPROVED BY
CITY ENGINEER
DATE 3/30/06

VICTORIA AVENUE MEDIAN IMPROVEMENTS

(FROM LA SIERRA AVENUE TO 350' NE'LY OF BOUNDARY LANE)

STA 35+00 TO STA 41+00

HORIZ. SCALE: 1"=20' VERT. SCALE: 1"=4'

ACCOUNT NO. 9542330214-440302
WORK ORDER NO. 0501803

R-3758

SHEET 4 OF 10

FILE

INDEXED 6-12-06 JH

G:\COMMON\MIKE'S GROUP\PROJECTS\STREETS\VICTORIA AVE - LA SIERRA TO BOUNDARY\DRAWINGS\PLANS\IMPROVEMENTS\STREET\R3758-04.DWG 03/09/06 1:59 pm

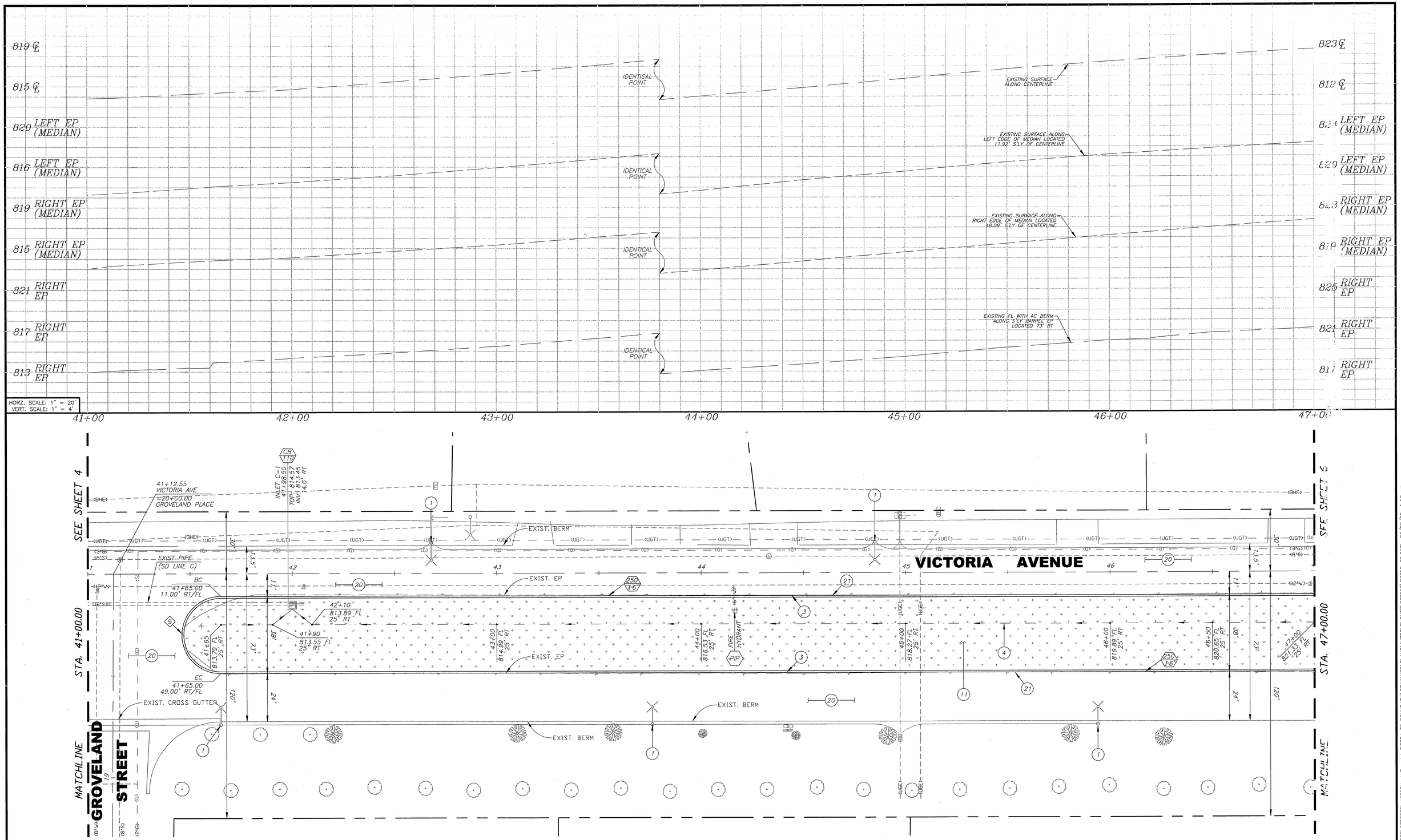

BENCHMARK E2-P2

CHISELED SQUARE ON THE TOP OF CURB AT THE WESTERLY END OF A CATCH BASIN FRONTING THE SOUTHERLY CURB OF INDIANA AVENUE AT THE SOUTHEAST CORNER OF INDIANA AVENUE AND FILLMORE STREET.

ELEVATION: 738.410

ENGINEER IN RESPONSIBLE CHARGE

MICHAEL KATUSIAN
R.C.E. No. 36686 expires 6/30/06
DATE 3/9/06

REGISTERED PROFESSIONAL ENGINEER MICHAEL KATUSIAN No. 36686 Exp. 6-30-06 CIVIL STATE OF CALIFORNIA

MARK	REVISIONS	APPR.	DATE

DESIGNED BY EL DRAWN BY EL CHECKED BY MK

CITY OF RIVERSIDE, CALIFORNIA
PUBLIC WORKS DEPARTMENT

APPROVED BY	BY	DATE
PRINCIPAL ENGINEER		3/16/06
CONSTRUCTION ADMIN.		3/14/06
SURVEYOR		3/14/06
STREET SERVICES		3/15/06
TRAFFIC ENGINEER		3/16/06

APPROVED BY
CITY ENGINEER
DATE 3/15/06

VICTORIA AVENUE
MEDIAN IMPROVEMENTS
(FROM LA SIERRA AVENUE TO 350' NE'LY OF BOUNDARY LANE)
STA 41+00 TO STA 47+00

HORIZ. SCALE: 1"=20' VERT. SCALE: 1"=4'

ACCOUNT. NO. 9542330214-440302
WORK ORDER. NO. 0501803

R-3758

SHEET 5 OF 10

FILE NO.

G:\COMMON\MIKE'S GROUP\PROJECTS\STREETS\VICTORIA AVE - LA SIERRA TO BOUNDARY\DRAWINGS\PLANS\IMPROVEMENTS\STREET\R3758-05.DWG 03/09/06 1:58 pm

INDEXED 6-12-06 KH

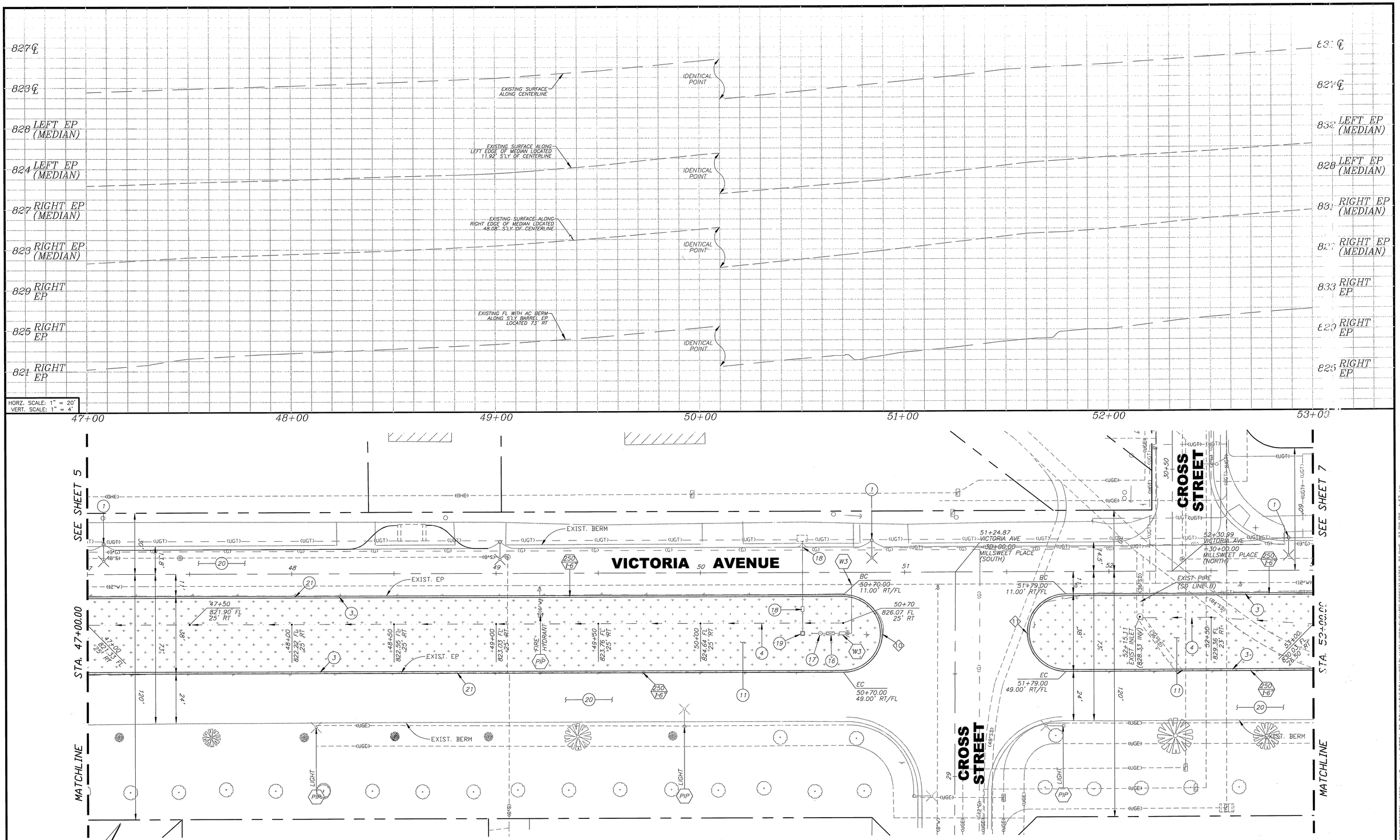

BENCHMARK E2-P2

CHISELED SQUARE ON THE TOP OF CURB AT THE WESTERLY END OF A CATCH BASIN FRONTING THE SOUTHERLY CURB OF INDIANA AVENUE AT THE SOUTHEAST CORNER OF INDIANA AVENUE AND FILLMORE STREET.

ELEVATION: 738.410

ENGINEER IN RESPONSIBLE CHARGE

MICHAEL KATUSIAN

R.C.E. No. 36686 expires 6/30/06

DATE 3/9/06

REGISTERED PROFESSIONAL ENGINEER MICHAEL KATUSIAN No. 36686 Exp. 6-30-06 CIVIL STATE OF CALIFORNIA

MARK	REVISIONS	APPR.	DATE

DESIGNED BY EL DRAWN BY EL CHECKED BY MK

CITY OF RIVERSIDE, CALIFORNIA
PUBLIC WORKS DEPARTMENT

APPROVED BY	BY	DATE
PRINCIPAL ENGINEER	PH	3/10/06
CONSTRUCTION ADMIN.	SL	3/10/06
SURVEYOR	[illegible]	3/10/06
STREET SERVICES	[illegible]	3/15/06
TRAFFIC ENGINEER	SL	3/15/06

APPROVED BY

CITY ENGINEER

DATE 3/15/06

VICTORIA AVENUE
MEDIAN IMPROVEMENTS
(FROM LA SIERRA AVENUE TO 350' NE'LY OF BOUNDARY LANE)
STA 47+00 TO STA 53+00

HORIZ. SCALE: 1"=20' VERT. SCALE: 1"=4'

ACCOUNT. NO. 9542330214-440302
WORK ORDER. NO. 0501803

R-3758

SHEET 6 OF 10

FILE

INDEXED 6-12-06 LH

G:\COMMON\MIKE'S GROUP\PROJECTS\STREETS\VICTORIA AVE - LA SIERRA TO BOUNDARY\DRAWINGS\PLANS\IMPROVEMENTS\STREET\R3758-06.DWG 03/09/06 1:57 pm

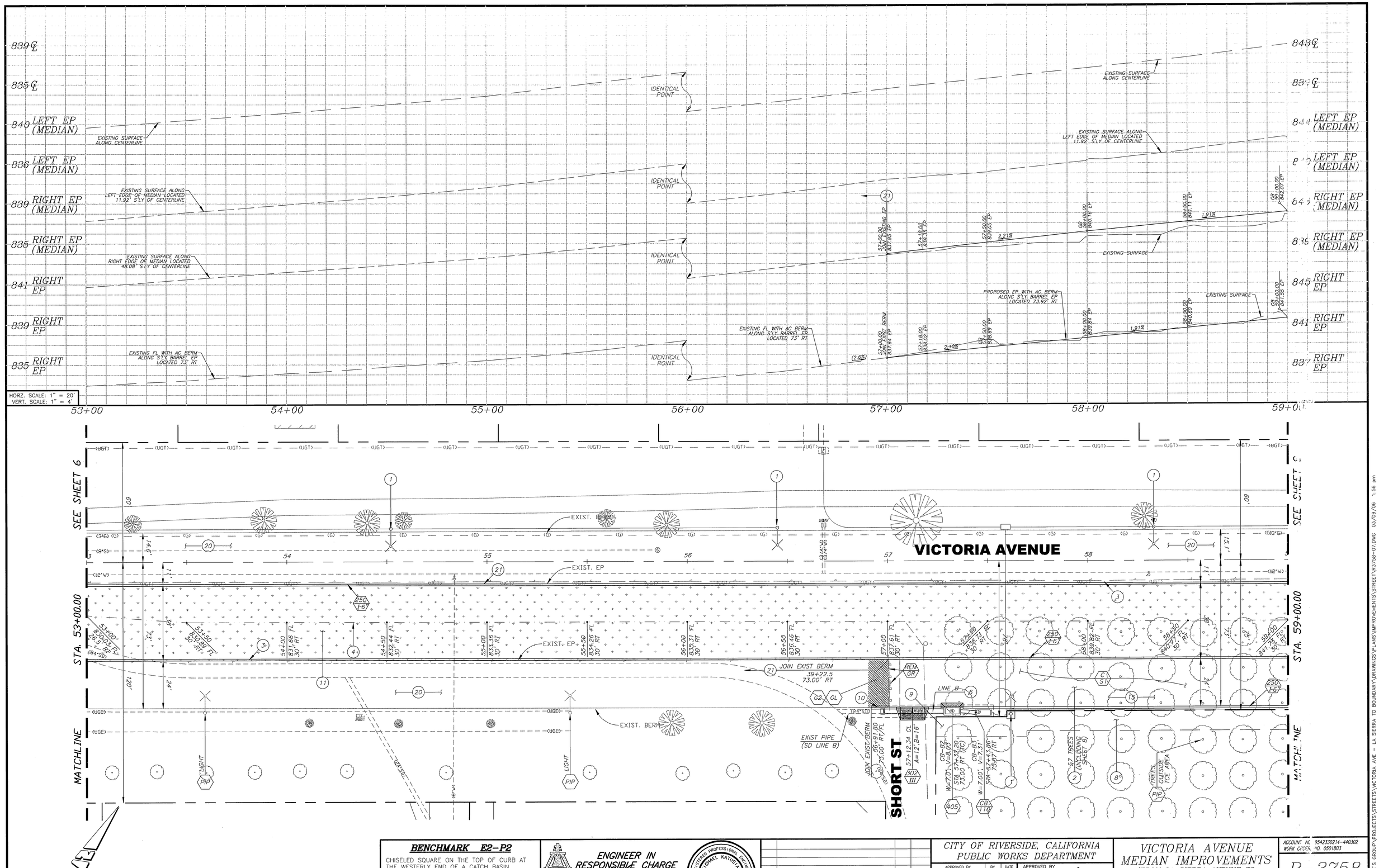

BENCHMARK E2-P2

CHISELED SQUARE ON THE TOP OF CURB AT THE WESTERLY END OF A CATCH BASIN FRONTING THE SOUTHERLY CURB OF INDIANA AVENUE AT THE SOUTHEAST CORNER OF INDIANA AVENUE AND FILLMORE STREET.

ELEVATION: 738.410

ENGINEER IN RESPONSIBLE CHARGE

MICHAEL KATUSIAN
R.C.E. No. 36686 Expires 6/30/06
DATE 3/9/06

REGISTERED PROFESSIONAL ENGINEER MICHAEL KATUSIAN No. 36686 Exp. 6-30-06 CIVIL STATE OF CALIFORNIA

MARK	REVISIONS	APPR.	DATE

DESIGNED BY F.L. DRAWN BY F.L. CHECKED BY M.K.

CITY OF RIVERSIDE, CALIFORNIA
PUBLIC WORKS DEPARTMENT

APPROVED BY	BY	DATE
PRINCIPAL ENGINEER		3/16/06
CONSTRUCTION ADMIN.		3/14/06
SURVEYOR		3/14/06
STREET SERVICES		3/16/06
TRAFFIC ENGINEER		3/16/06

APPROVED BY
CITY ENGINEER
DATE 3/15/06

VICTORIA AVENUE
MEDIAN IMPROVEMENTS
(FROM LA SIERRA AVENUE TO 350' NE'LY OF BOUNDARY LANE)
STA 53+00 TO STA 59+00

HORIZ. SCALE: 1"=20' VERT. SCALE: 1"=4'

ACCOUNT NO. 9542330214-440302
WORK ORDER NO. 0501803

R-3758

SHEET 7 OF 10

FILE NO.

INDEXED 6-12-06 GH

G:\COMMON\MIKE'S GROUP\PROJECTS\STREETS\VICTORIA AVE - LA SIERRA TO BOUNDARY\DRAWINGS\PLANS\IMPROVEMENTS\STREET\R3758-07.DWG 03/09/06 1:56 pm

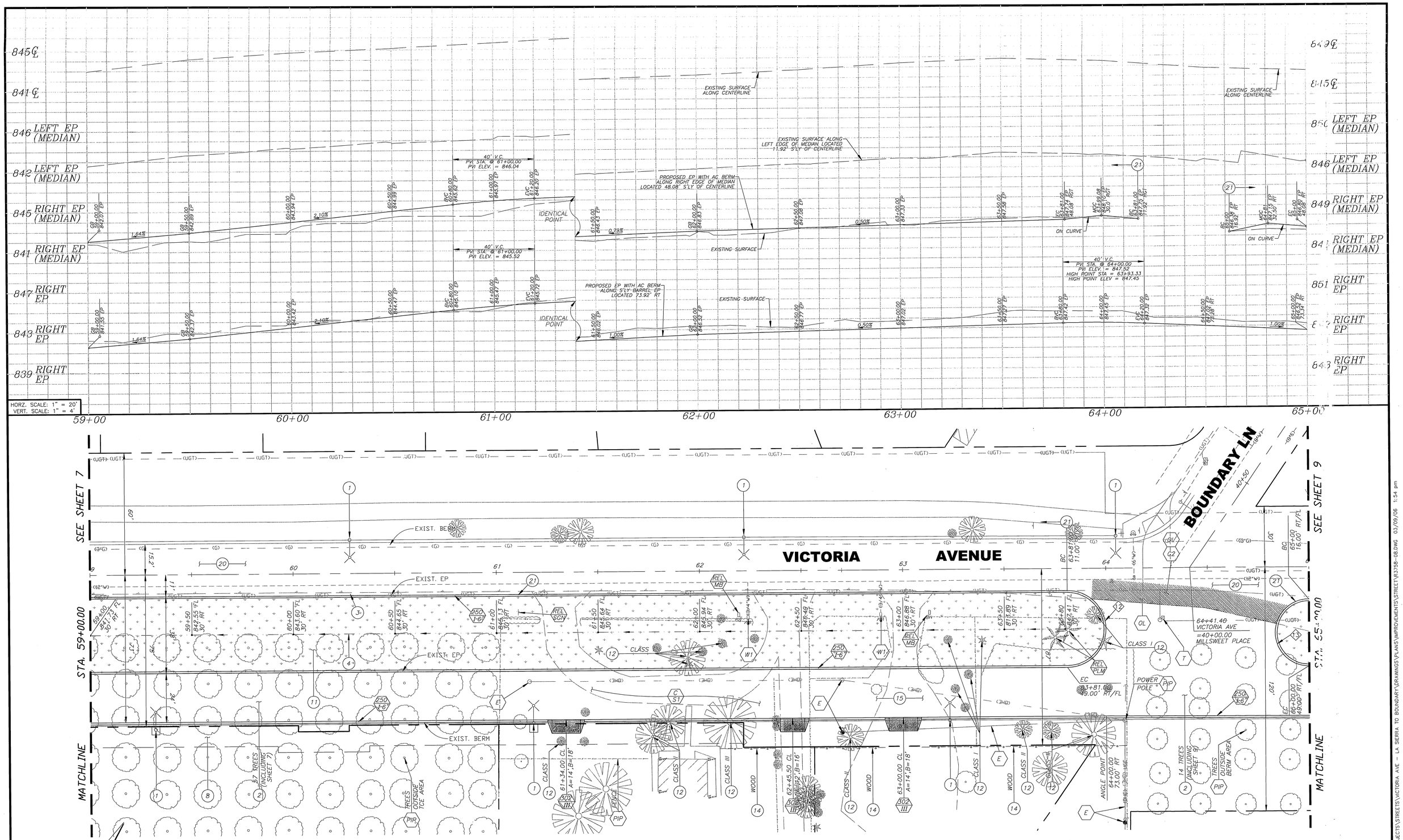

BENCHMARK E2-P2

CHISELED SQUARE ON THE TOP OF CURB AT THE WESTERLY END OF A CATCH BASIN FRONTING THE SOUTHERLY CURB OF INDIANA AVENUE AT THE SOUTHEAST CORNER OF INDIANA AVENUE AND FILLMORE STREET.

ELEVATION: 738.410

ENGINEER IN RESPONSIBLE CHARGE

MICHAEL KATUSIAN
R.C.E. No. 36686 Expires 6/30/06
DATE 3/9/06

REGISTERED PROFESSIONAL ENGINEER — MICHAEL KATUSIAN — No. 36686 — Exp. 6-30-06 — CIVIL — STATE OF CALIFORNIA

MARK	REVISIONS	APPR.	DATE

DESIGNED BY FL DRAWN BY FL CHECKED BY MK

CITY OF RIVERSIDE, CALIFORNIA
PUBLIC WORKS DEPARTMENT

APPROVED BY	BY	DATE
PRINCIPAL ENGINEER		3/16/06
CONSTRUCTION ADMIN.		3/17/06
SURVEYOR		3/16/06
STREET SERVICES		3/17/06
TRAFFIC ENGINEER		3/16/06

APPROVED BY
CITY ENGINEER
DATE 3/15/06

VICTORIA AVENUE MEDIAN IMPROVEMENTS

(FROM LA SIERRA AVENUE TO 350' NE'LY OF BOUNDARY LANE)

STA 59+00 TO STA 65+00

HORIZ. SCALE: 1"=20' VERT. SCALE: 1"=4'

ACCOUNT. NO. 9542330214-440302
WORK ORDER NO. 0501803

R-3758

SHEET 8 OF 10

FILE

G:\COMMON\MIKE'S GROUP\PROJECTS\STREETS\VICTORIA AVE - LA SIERRA TO BOUNDARY\DRAWINGS\PLANS\IMPROVEMENTS\STREETS\R3758-08.DWG 03/09/06 1:54 pm

INDEXED 6-12-06 LH

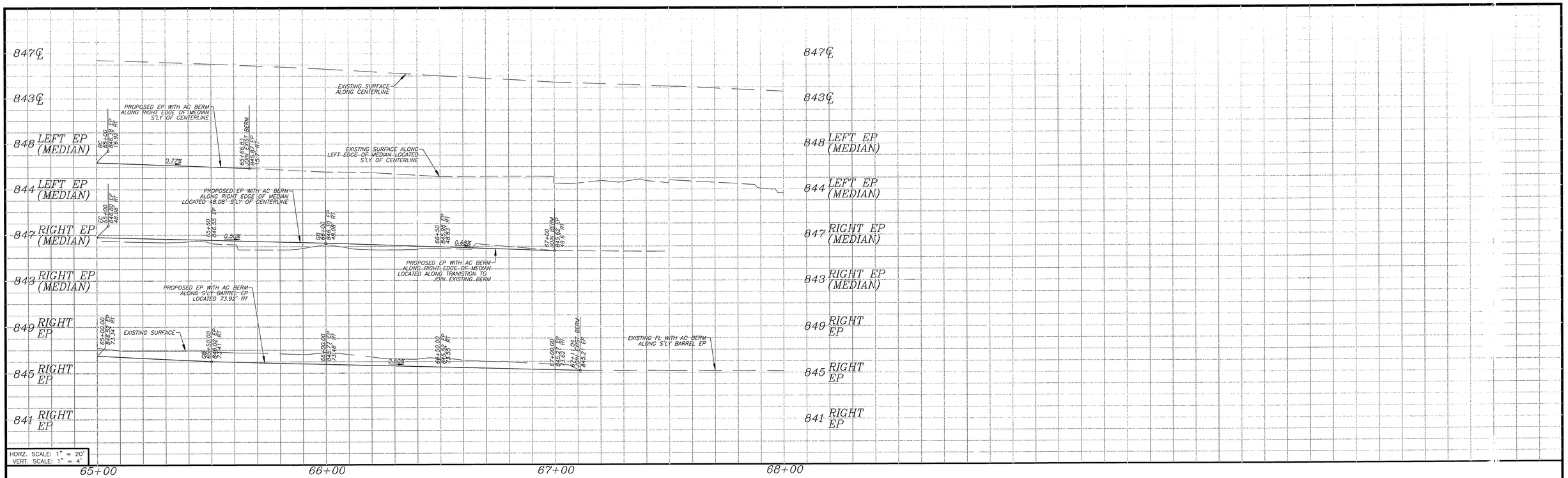

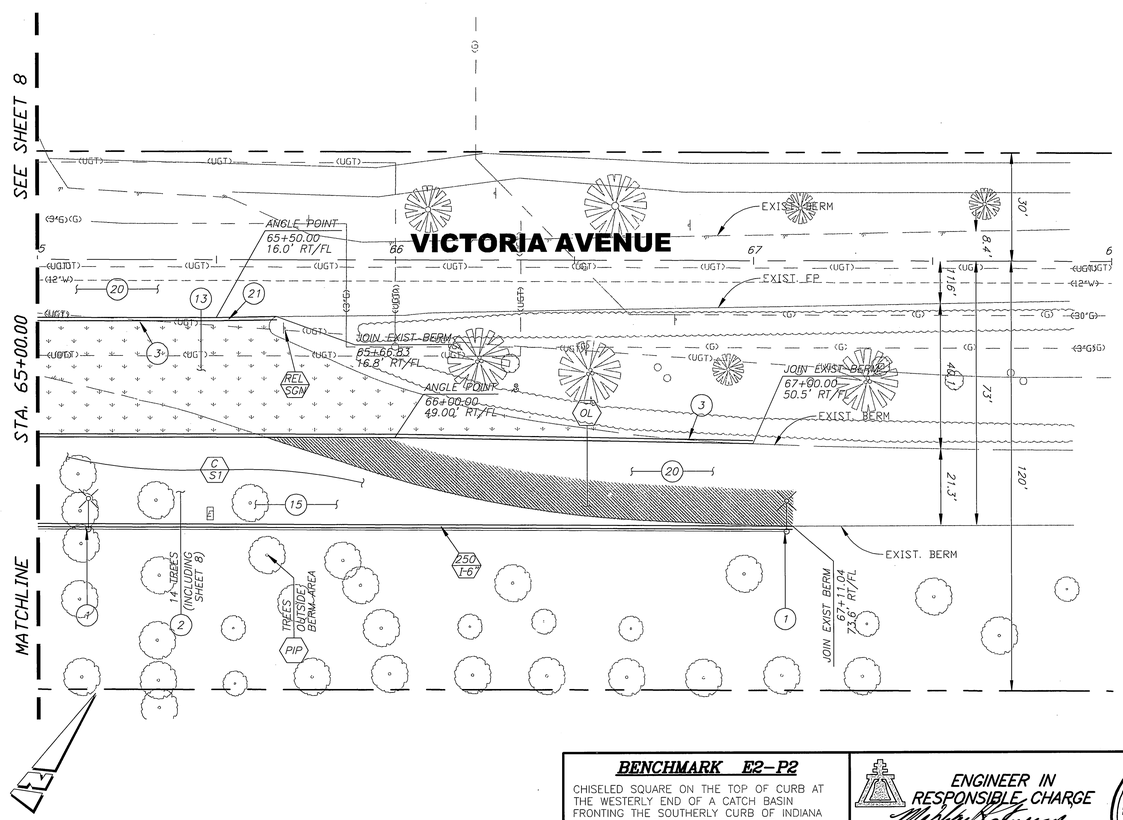

BENCHMARK E2-P2

CHISELED SQUARE ON THE TOP OF CURB AT THE WESTERLY END OF A CATCH BASIN FRONTING THE SOUTHERLY CURB OF INDIANA AVENUE AT THE SOUTHEAST CORNER OF INDIANA AVENUE AND FILLMORE STREET.

ELEVATION: 738.410

ENGINEER IN RESPONSIBLE CHARGE

MICHAEL KATUSIAN
R.C.E. No. 36686 expires 6/30/06
DATE 3/9/06

REGISTERED PROFESSIONAL ENGINEER MICHAEL KATUSIAN No. 36686 Exp. 6-30-06 CIVIL STATE OF CALIFORNIA

MARK	REVISIONS	APPR.	DATE

DESIGNED BY FL DRAWN BY FL CHECKED BY MK

CITY OF RIVERSIDE, CALIFORNIA
PUBLIC WORKS DEPARTMENT

APPROVED BY	BY	DATE
PRINCIPAL ENGINEER		3/15/06
CONSTRUCTION ADMIN.		3/15/06
SURVEYOR		3/15/06
STREET SERVICES		3/15/06
TRAFFIC ENGINEER		3/15/06

APPROVED BY
CITY ENGINEER
DATE 3/15/06

VICTORIA AVENUE MEDIAN IMPROVEMENTS
(FROM LA SIERRA AVENUE TO 350' NE'LY OF BOUNDARY LANE)
STA 65+00 TO STA 68+00

HORIZ. SCALE: 1"=20' VERT. SCALE: 1"=4'

ACCOUNT. NO. 9542330214-440302
WORK ORDER NO. 0501803

R-3758

SHEET 9 OF 10

FILE NO.

G:\CO\NON\MIKE'S GROUP\PROJECTS\STREETS\VICTORIA AVE - LA SIERRA TO BOUNDARY\DRAWINGS\PLANS\IMPROVEMENTS\STREET\R3758-09.DWG 03/01/06 10:58 am

INDEXED 6-12-06 HH

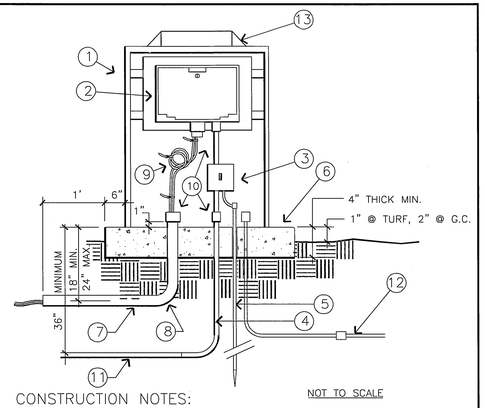

NOT TO SCALE

CONSTRUCTION NOTES:

1. MYERS POWER PRODUCTS, CAT NO MEUGZZX-ENCE-RIV, SS STAINLESS STEEL ENCLOSURE, MODEL SIZED TO FIT CONTROLLER, WITH SERVICE ADDRESS STENCILED ON LOCKING HINGED DOOR. SECURELY ANCHOR ENCLOSURE TO CONCRETE PAD.
2. WEATHER PROOF AUTOMATIC CONTROLLER, SECURELY WALL MOUNTED TO ENCLOSURE. NOTE LEGEN FOR ADDITIONAL EQUIPMENT NOT SHOWN, BUT REQUIRED.
3. SQUARE D BREAKER BOX MODEL Q02-4L70S, OR APPROVED EQUAL WITH SINGLE 15 AMP BREAKER AND DUPLEX OUTLET. MAKE 120 V POWER AND GROUND CONNECTION AT BREAKER BOX. MOUNT IN ENCLOSURE.
4. 3-#8 CU THW WIRES IN MIN. 2" SCH 40 PVC CONDUIT FROM CONTROLLER TO POWER SOURCE. BOND SERVICE TO BREAKER BOX.
5. #8 CU COPPER GROUND WIRE AND 5/8" BY 8' LONG DRIVEN COPPER GROUNDING ROD WITHIN ENCLOSURE. DRIVE ROD PRIOR TO INSTALLATION OF ENCLOSURE.
6. CONCRETE PAD. EXTEND SUFFICIENT DISTANCE IN FRONT OF ENCLOSURE TO ALLOW UNOBSTRUCTED AREA FOR DOOR SWING FREE OF PLANTINGS, 6" MIN. BEYOND ENCLOSURE ON ALL OTHER SIDES.
7. LOW VOLTAGE DIRECT BURIAL WIRES TO CONTROL VALVES.
8. 90° WRAPPED HDG SWEEP ELL, SIZED TO FIT WIRE FOR NUMBER OF STATIONS ON THE CONTROLLER, PLUS SPARES AND COMMON.
9. THREE FOOT EXPANSION LOOP OF CONTROL WIRE, NEATLY LACED WITH ZIP-LOCKS. MAKE CONNECTION DIRECTLY TO IRRIGATION CONTROLLER TERMINALS FOR 12 STATION & SMALLER. USE TERMINAL STRIPS FOR CONTROLLERS LARGER THAN 12 STATIONS.
10. PROVIDE INSULATING ELECTRICAL BUSHINGS AT CONTROLLER AND END OF CONDUITS.
11. ET GUAGE CONDUIT 1" MIN IN SIZE, GRAY P.V.C., CONTINUOUS TO GAUGE.
12. RAIN BUCKET CONDUIT 1" MIN, GRAY PVC, CONTINUOUS TO BUCKET
13. REMOTE DOME ANTENNA

Approved	Date	Park and Recreation Department CITY OF RIVERSIDE	Detail No.
BJ	05/01/02	IRRIGATION CONTROLLER	4070
Revised BJ - Rev. Conductors	Date 11/21/02		

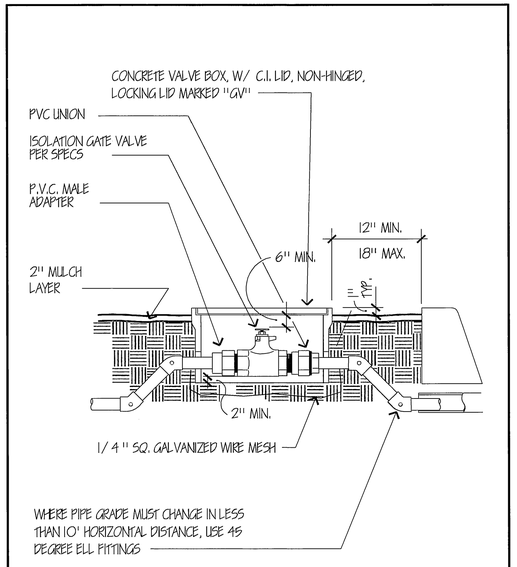

NOT TO SCALE

Approved	Date	Park and Recreation Department CITY OF RIVERSIDE	Detail No.
BJ	04/30/02	ISOLATION VALVE IN BOX	4052
Revised	Date		

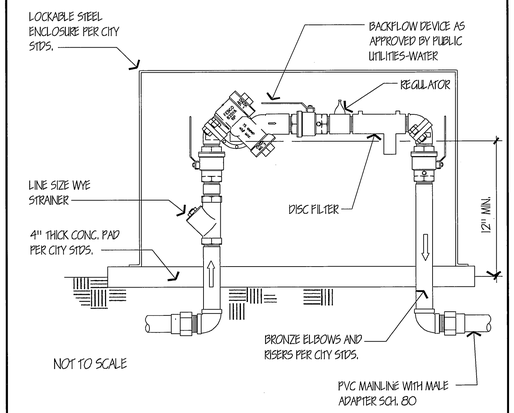

NOT TO SCALE

Notes:
1) Install backflow device square with hardscape elements as approved by the Park Projects Inspector in the field.
2) Coordinate with Public Utilities-Water for location of backflow and water service. Wherever possible, locate service and backflow in the parkway at mid-block a minimum of 100' from the intersection per City standards.
3) Riverside Public Utilities Standard Drawing # CWD-630 applies.

Approved	Date	Park and Recreation Department CITY OF RIVERSIDE	Detail No.
BJ	05/21/02	REDUCED PRESSURE BACKFLOW DEVICE	4011
Revised	Date		

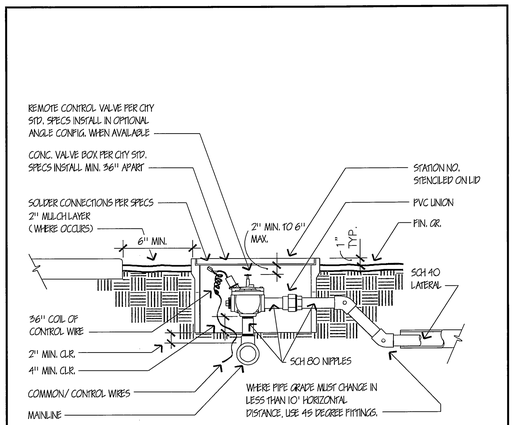

NOTES:
1) EACH VALVE SHALL HAVE ITS OWN TEE OR ELL CONNECTION TO THE MAINLINE. NO MANIFOLD CONNECTIONS.
2) PROVIDE MINIMUM 3' CLEAR DISTANCE BETWEEN VALVES.
3) INSTALL VALVE BOX SO THAT BOX DOES NOT REST ON ANY IRRIGATION LINES.
4) PROVIDE STAMPED BRASS TAG 1/2" BY 1" W/ 1/4" HIGH SEQUENCE NUMBER ON ALL CONTROL WIRES.
5) DETAIL MAY VARY SLIGHTLY DURING THE APPROVAL IRRIGATION PLANS.

NOT TO SCALE

Approved	Date	Park and Recreation Department CITY OF RIVERSIDE	Detail No.
BJ	06/21/02	REMOTE CONTROL VALVE	4030
Revised	Date		

IRRIGATION SYSTEM DESIGN CRITERIA

WATER SERVICE: CONTRACTOR SHALL CONTACT CITY OF RIVERSIDE, PUBLIC UTILITIES WATER AND OBTAIN AND PAY FOR NEW WATER METER(S) AS NECESSARY TO ADEQUATELY SERVE THE IRRIGATION SYSTEM AS DESIGNED. METER AND BACKFLOW DEVICES SHALL BE LOCATED IN THE PARKWAY A MINIMUM OF 100' FROM ANY INTERSECTION OR MAJOR DRIVEWAY (CURB RETURN TYPE DRIVEWAY OPENING). CONTRACTOR SHALL BE RESPONSIBLE FOR ALL WATER COSTS THROUGHOUT THE MAINTENANCE AND PLANT ESTABLISHMENT PERIOD IF APPLICABLE.

ELECTRIC SERVICE: CONTRACTOR SHALL CONTACT THE CITY OF RIVERSIDE, PUBLIC UTILITIES, ELECTRIC DIVISION AND SHALL OBTAIN AND PAY FOR A NEW "NON-METERED" ELECTRIC SERVICE AS NECESSARY TO SERVE THE NEW IRRIGATION CONTROLLER. SERVICE SHALL BE UNDERGROUND TYPE AND SHALL BE COORDINATED WITH THE CONTROLLER LOCATION.

IRRIG. CONTROLLER: THE IRRIGATION CONTROLLER(S) (ONE REQUIRED AT EACH POINT OF CONNECTION, IE. POC), EACH SHALL BE SIZED TO ACCOMMODATE THE NUMBER OF VALVES REQUIRED TO SERVE THE ENTIRE PROJECT AND TO PROVIDE A MINIMUM OF TWO SPARE STATIONS. THE CONTROLLER SHALL BE THE TYPE AND MANUFACTURER AS INDICATED ON THE PLANS. CONTROLLER SHALL BE WEATHERPROOF, WALL-MOUNT TYPE, INSTALLED WITHIN A LOCKING STAINLESS STEEL METAL ENCLOSURE TO SUPPORT CONTROLLER MANUFACTURE REQUIREMENTS, AS WELL AS CITY REQUIREMENTS, AND SHALL BE LOCATED MINIMUM OF 100' FROM ANY INTERSECTION OR MAJOR DRIVEWAY (CURB RETURN TYPE DRIVEWAY OPENING).

MAINLINE & ALL LINES BENEATH THE STREET (I.E. NOT WITHIN THE LANDSCAPE MEDIAN PLANTING AREAS) SHALL BE CONSTANT
SLEEVES: PRESSURE LINES INSTALLED IN SLEEVES. SLEEVES SHALL BE INSTALLED IN STRAIGHT LINES (NO TURNS OR BENDS, EITHER VERTICAL OR HORIZONTAL). PROVIDE A LINE SIZE GATE VALVE WITHIN A VALVE BOX IMMEDIATELY UPSTREAM OF LINE ENTERING THE STREET AREA. SIZE MAINLINE TO KEEP WATER VELOCITY BELOW 5 FEET PER SECOND. CONTROLLER WIRES SHALL ALSO BE SLEEVED IN GRAY PVC SCH. 40 PIPE, WITH 12" MINIMUM SEPARATION FROM THE MAINLINE WATER SLEEVE.

CONTROL WIRE: ALL CONTROL WIRE LOCATED UNDER PAVEMENT OF ANY TYPE SHALL BE SEPARATELY SLEEVED. PROVIDE A MINIMUM OF TWO SPARE CONTROL WIRES AT EACH END OF THE PROJECT, STUBBED OUT IN A VALVE BOX WITH THE LID MARKED "SW".

MAIN LINE: PRESSURE SUPPLY LINES 2 INCHES IN DIAMETER AND UP TO 8 INCHES IN DIAMETER SHALL BE EITHER CLASS 315 SOLVENT WELD PVC OR GASKET TYPE PVC. SOLVENT WELD AND RING TYPE PIPE SHALL NOT BE USED TOGETHER ON THE SAME PRESSURE SUPPLY LINE. PRESSURE SUPPLY LINES 121/2 INCHES IN DIAMETER AND SMALLER SHALL BE MINIMUM SCHEDULE 40 PVC.

LATERAL LINES: SIZE ALL LATERAL LINES AS NECESSARY TO KEEP WATER VELOCITY BELOW 5 FEET PER SECOND. DESIGN LATERAL LINE PLACEMENTS AT EDGES OF PLANTING SPACES TO AVOID CONFLICT WITH PLANTINGS, THE PIPE SHALL BE
SCH. 40.

CONTROL VALVES: ALL IRRIGATION CONTROL VALVES SHALL BRASS, PRESSURE REGULATING (MATER VALVE NON-REGULATING), SIZED TO PROVIDE THE WATER VOLUME REQUIRED WITH PRESSURE LOSS THROUGH THE VALVE KEPT AT BELOW A MAXIMUM OF 10% OF THE AVAILABLE STATIC PRESSURE. INSTALL VALVES IN "INLINE" CONFIGURATION WHERE AVAILABLE. ALL STATIONS SHALL BE SIZED TO AVOID STATIONS WITH MORE THAN 20 GPM DEMAND OR 50 HEADS PER STATION WHICHEVER IS GREATER.

VALVE BOXES: ALL VALVE BOXES SHALL BE CONCRETE BODY, WITH CAST IRON LIDS, NON-HINGED.

QUICK COUPLERS: PROVIDE QUICK COUPLER VALVES AT A MAXIMUM OF 50' FROM THE END OF THE LANDSCAPED AREA IN EACH ISLAND, AND SPACED AT A MAXIMUM OF 100' O.C. IN SHRUB AREAS AND 75' O.C. IN TURF AREAS.

BUBBLERS: ALL BUBBLERS SHALL BE OF THE TYPE AND MANUFACTURER INDICATED ON THE PLANS AND SHALL BE INSTALLED WITH TRIPLE SWING JOINTS AS DETAILED. TWO BUBBLERS SHALL BE INSTALLED AT EACH TREE, WITH 48" MINIMUM SPACING BETWEEN EACH BUBBLER. TREES SHALL BE PLANTED 50' MINIMUM FROM EACH NOSE, THEN SPACED 45' MINIMUM BETWEEN EACH TREE.

DRIP TUBING SHALL HAVE A MINIMUM 140-MESH FILTER WITH FLUSHING CAPABILITY MOUNTED ABOVE GROUND, WITH BRASS FITTINGS. THE DRIP TUBING SHALL BE EQUAL TO NETAFIM TECHLINE MODEL TLDL-9-24-10. EACH EMITTER SHALL NOT EXCEED 1 GPH, WITH LINE FLUSHING VALVES MOUNTED IN RECTANGULAR VALVE BOXES, AIR-VACUUM RELIEF VALVES MOUNTED IN SQUARE VALVE BOXES AND OPERATION/PRESSURE INDICATORS AT THE END OF EACH RUN.

MISC: 1. THE RAIN BUCKET AND THE ET GAUGE SHALL BE INSTALLED PER MANUFACTURE REQUIREMENTS.
2. A FERTALIZER INJECTOR SHALL BE INSTALLED AFTER THE MASTER VALVE, ADIQUTLY SIZED PER MANUFACTURE RECOMMENDATIONS. EQUAL TO EZ-FLO FERTILIZING SYSTEMS, (866) 393-5601

RECORD PRINTS: INITIALLY SHALL BE MARKED UP BLUE LINE PRINTS, ALL DIMENSIONS NOTED ON A COMPACT DISK (CD) WITH ALL GLOBAL POSITIONING SYSTEM (GPS) COORDINATES FOR EACH REQUIRED ITEM, AND WHICH INFORMATION IS TO BE TRANSFERRED TO EITHER SEPIA MYLAR OR PHOTO MYLAR PRINTS PRIOR TO TURN-OVER TO THE CITY AT FINAL ACCEPTANCE OF THE PROJECT.

TYPICAL LANDSCAPE IRRIGATION NOTES

1. ALL RELATED WORK SHALL CONFORM TO THE CITY OF RIVERSIDE PUBLIC WORKS DEPARTMENT STANDARDS AND SPECIFICATIONS FOR PLANTING AND IRRIGATION WORK. (SPECIFICATIONS SECTION 02441 AND DESIGN CRITERIA SECTION D02441).

2. WHEN THE MEDIAN ISLANDS EXCEED 400' IN LENGTH, EACH NORTHERLY AND SOUTHERLY DRIP TUBING RUN FOR THE ROSSES, SHALL HAVE MINIMUM OF FOUR IRRIGATION REMOTE VALVES, LOCATED NEAR THE P.O.C.. LATERAL LINES SHALL RUN FROM THE RCV TO THE NEXT DRIP TUBING SPLIT.
3. DRIP TUBING INSTALLATION:

A. THE DESIGN MUST CONFORM TO THE MANUFACTURE WARRANTY REQUIREMENTS;
B. VITAL COMPONENTS SHALL BE INSTALLED SUCH AS FLUSH VALVES, AIR/VACUME VALVES, INDICATORS, FILTER (140MISH MINIMUM), REGULATOR, ETC;
C. THE DRIP TUBING SHALL HAVE 2' EXPANSION LOOPS AT EVERY TURN IN DIRECTION, AND AT EVERY 100' FOOT DISTANCE;
D. METAL STAKES SHALL BE INSTALLED AT A MINIMUM OF EVERY 10' TO KEEP THE TUBING IN A UNIFORM LINE.
E. ONLY FITTING APPROVED BY THE MANUFACTURE SHALL BE USED TO ENSURE COMPLIANCE TO THE MANUFACTURE RECOMMENDATIONS;

4. CONTROLLER: THE CONTROLLER SHALL BE INSTALLED PER THE MANUFACTURE REQUIREMENTS TO OBTAIN INSTALLATION CERTIFICATION. ALL COMPONENTS LISTED BELOW SHALL BE INSTALLED TO MANUFACTURE REQUIREMENTS
THE DEVELOPER SHALL BE RESPONSIBLE TO ACCEPTABLY MAINTAIN ALL PLANTINGS FOR A MINIMUM PERIOD OF "AS NOTED IN SPECIFICATIONS" (??) DAY/MONTH/YEAR.

POINT OF CONNECTION ELECTRIC NOTES

1. *ALL FACILITIES INSTALLED BY THE CONTRACTOR SHALL BE INSPECTED AND APPROVED BY THE UTILITIES DEPT CONSTRUCTION INSPECTOR (PH. 782-5429). ANY CHANGES SHALL BE APPROVED BY THE UTILITIES DEPT. PRIOR TO EXECUTION. THE CONTRACTOR SHALL BE RESPONSIBLE FOR COORDINATING ALL PHASES OF CONSTRUCTION WITH THE UTILITIES DEPT. CONSTRUCTION INSPECTOR AND CONSTRUCTION SUPERINTENDANT (PH. 351-6173)*
2. *ALL IRRIGATION CONTROLLER FEED POINTS TO BE CONNECTED BY PUBLIC UTILITIES DEPT. AND ENERGIZED WHEN CLEARED BY UTILITIES DEPT. INSPECTOR.*
3. *ALL WIRE TO BE #12 CU. THW.*
4. *CONDUIT AND FITTINGS TO BE IN CONFORMANCE WITH UCS-100. BACKFILL TO BE TYPE AND COMPACTED AS SPECIFIED IN UCS-100.1.*
5. *PROVIDE RELEASE LETTER AUTHORIZING ENERGIZATION, SIGNED BY RESPONSIBLE PERSON IN CHARGE. OBTAIN FORM LETTER FROM UTILITY INSPECTOR.*

P.O.C. DATA WATER SERVICE
METER SIZE: X/X"
SERVICE ADDRESS: XXXXXXXXXXXXXXXXX
ELEVATION: XXX.XX
PRESSURE ZONE: GRAVITY (XXX ZONE)
STATIC PRESSURE: XX P.S.I.
SERVED AREA: HIGHEST ELEV. XXX.XX
LOWEST ELEV. XXX.XX
MAX. GPM DEMAND: XX.XX G.P.M.
METER NO.:

WATER SERVICE SUMMAR TABLE

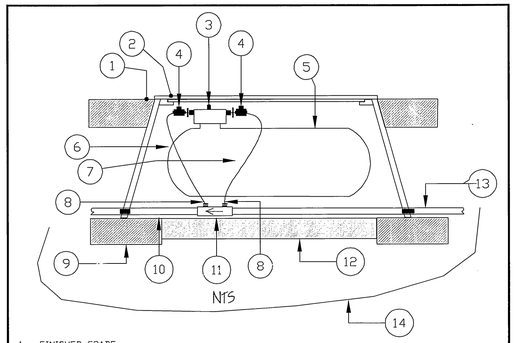

1 - FINISHED GRADE
2 - VALVE BOX & COVER 17" L X 12"D X 11 3/4" W (MIN), CONCRETE, C.I. LID, NON-HINGED, MARKED "FI".
3 - PROPORTIONING CAP WITH FEED ADJUSTMENT KNOB
4 - EZ-FLO SHUT OFF VALVES
5 - EZ-FLO MODEL EZ001-CX FERTILIZING SYSTEM 13" L X 8" D X 11" H
6 - FERTILIZER OUT - CONNECT CLEAR TUBE TO GREEN CONNECTIONS ON PROPORTIONING CAP AND COUPLING
7 - WATER IN - CONNECT BLACK TUBE TO BLUE CONNECTIONS ON PROPORTIONING CAP AND COUPLING
8 - 1/4" TUBING CLAMP - BOTH THE GREEN AND BLUE COUPLING TUBING CONNECTIONS
9 - APPROVED BACKFILL
10 - PVC MAIN LINE TO VALVE MANIFOLD
11 - EZ COUPLING CONNECTOR - INSTALL ACCORDING TO WATER FLOW DIRECTION ARROW
12 - PEA GRAVEL (1 CU. FT.)
13 - PVC MAIN LINE FROM BACK FLOW PREVENTER
14 - 1/4 GALVINIZED WIRE MESH

NOTE:
ITEMS 3, 4, 5, 6, 7 AND 8 ARE INCLUDED WITH THE EZ-FLO SYSTEM. ITEM 11 IS PURCHASED SEPARATELY.

©2005 EZ-FLO FERTILIZING SYSTEMS, INC.

EZ-FLO FERTILIZING SYSTEM MODEL NUMBER - EZ001-CX 1.5 GALLON CAPACITY

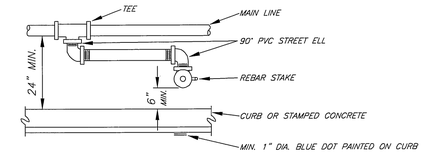

PLAN VIEW

3 TYPICAL QUICK COUPLER VALVE
NO SCALE
(NOTE: PROVIDE A ROUND CONCRETE VALVE BOX IN TURF AREAS)

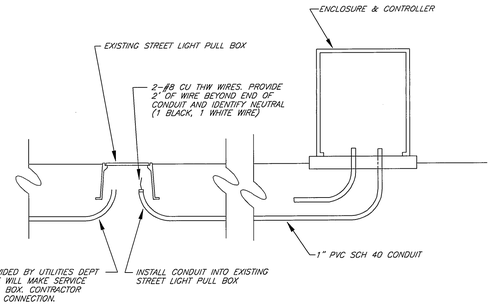

8 TYPICAL UNDERGROUND ELECTRICAL CONNECTION
NO SCALE

ENGINEER IN RESPONSIBLE CHARGE
MICHAEL KATUSIAN
R.C.E. No. 36686 Expires 6/30/06
DATE 3/9/06

REGISTERED PROFESSIONAL ENGINEER MICHAEL KATUSIAN No. 36686 Exp. 6-30-06 CIVIL STATE OF CALIFORNIA

MARK	REVISIONS	APPR.	DATE

DESIGNED BY F.L. DRAWN BY F.L. CHECKED BY M.K.

CITY OF RIVERSIDE, CALIFORNIA
PUBLIC WORKS DEPARTMENT

APPROVED BY	BY	DATE
PRINCIPAL ENGINEER		3/16/06
CONSTRUCTION ADMIN.		3/14/06
SURVEYOR		3/14/06
STREET SERVICES		3/14/06
TRAFFIC ENGINEER		3/14/06

APPROVED BY
CITY ENGINEER
DATE 3/15/06

VICTORIA AVENUE MEDIAN IMPROVEMENTS
(FROM LA SIERRA AVENUE TO 350' NE'LY OF BOUNDARY LANE)
IRRIGATION NOTES AND DETAILS

HORIZ. SCALE: NA VERT. SCALE: NA

ACCOUNT. NO. 9542330214-440302
WORK ORDER NO. 0501803

R-3758

SHEET 10 OF 10

FILE NO.

G:\CDWORK\WMC'S GROUP\PROJECTS\STREETS\VICTORIA AVE - LA SIERRA TO BOUNDARY\DRAWINGS\PLANS\IMPROVEMENTS\STREET\R3758-10.DWG 03/01/06 10:58 am

INDEXED 6-12-06 GH