STREET IMPROVEMENT PLANS FOR:

EASTRIDGE DISTRIBUTION CENTER
PARCEL MAP NO. 24535

IN THE
CITY OF RIVERSIDE, CALIFORNIA

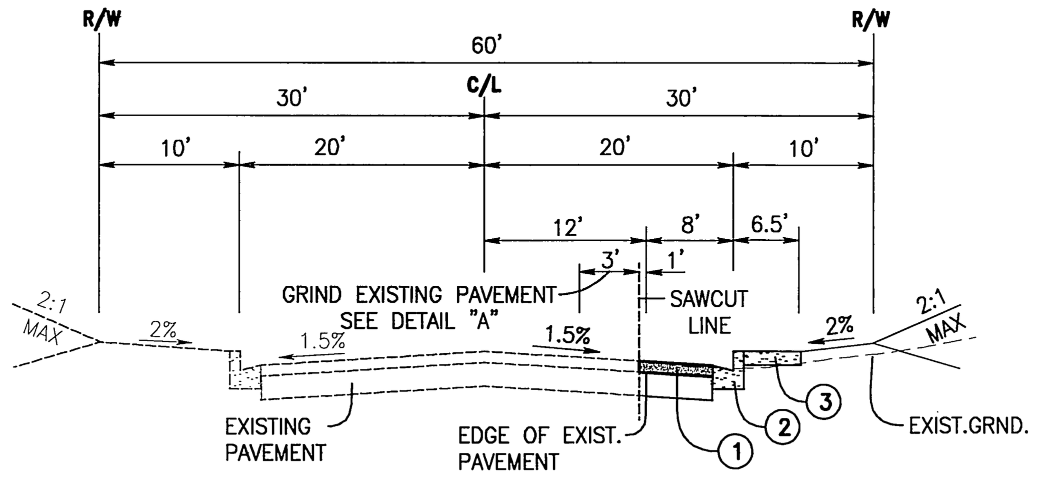

LANCE DRIVE – TYPICAL SECTION

(STA 09+91.01 to STA 15+48.03)
NTS – T.I.=6.0

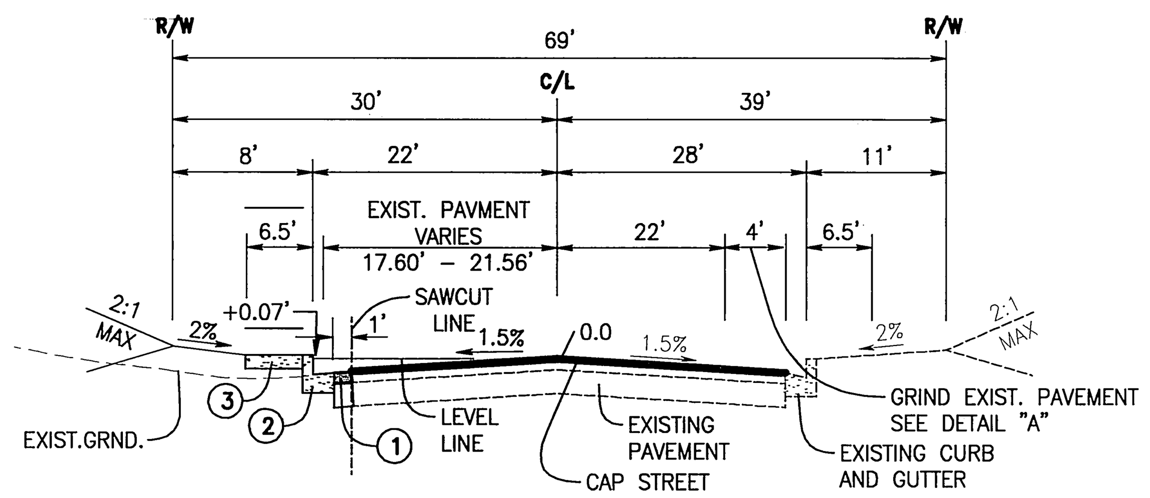

RIVER RUN – TYPICAL SECTION

(STA 15+87.24 to STA 21+31.81)
NTS – T.I.=6.0

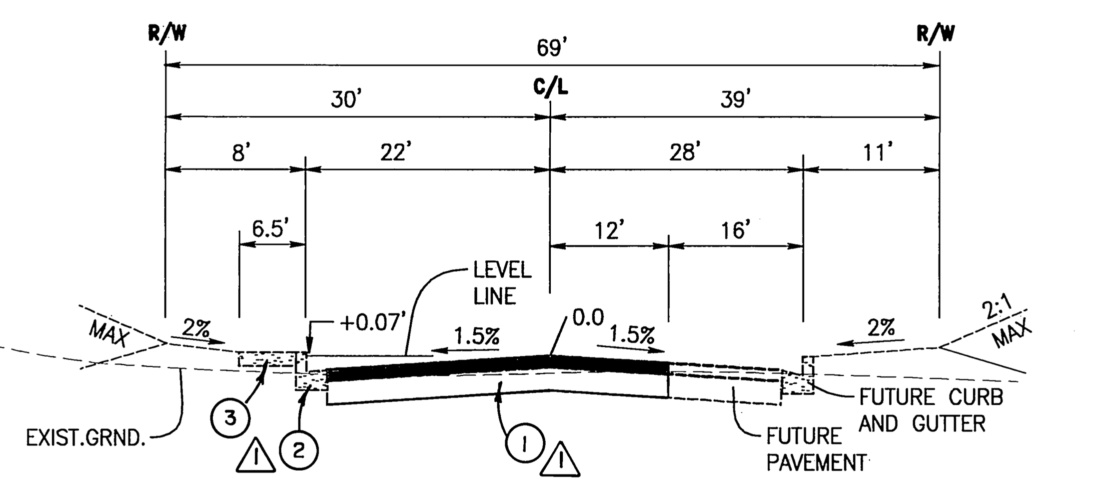

~~FUTURE~~ RIVER RUN – TYPICAL SECTION

(STA 10+57.81 to STA 15+87.24)
NTS – T.I.=6.0

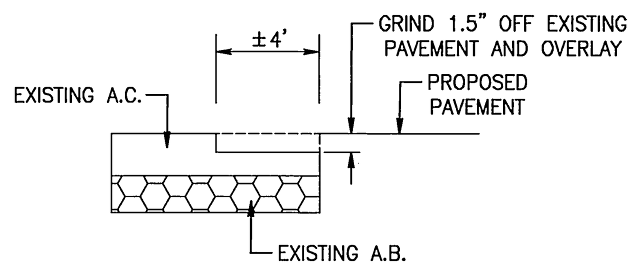

DETAIL "A"

N.T.S.

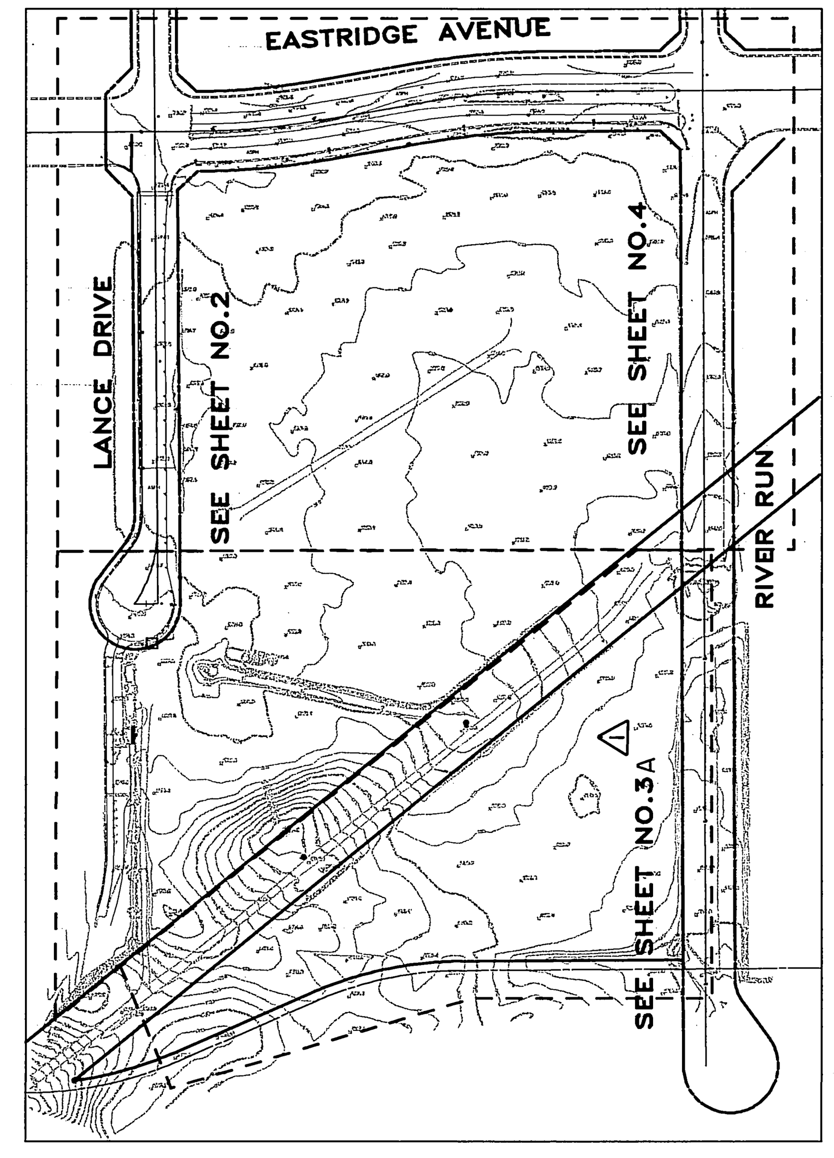

INDEX MAP

GRAPHIC SCALE 1"=200'

0 200 400 600

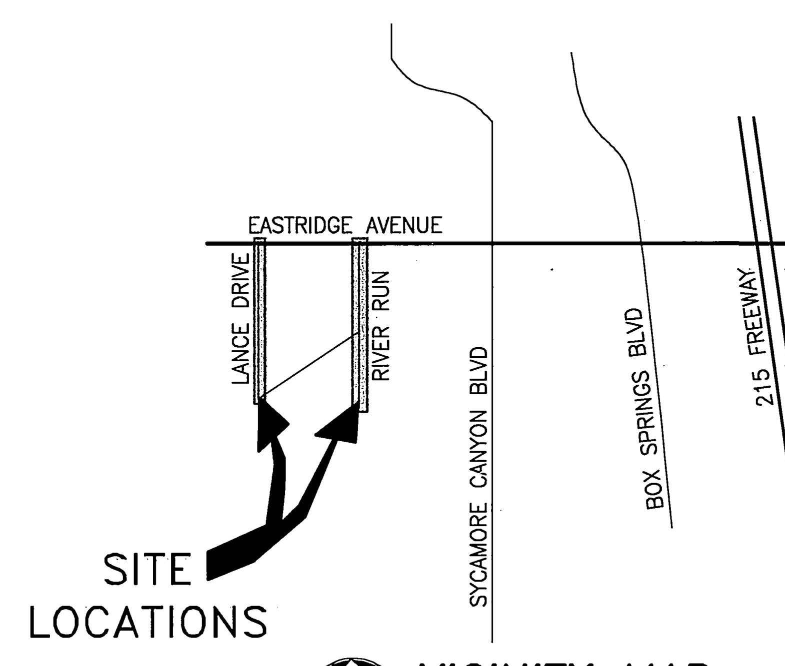

VICINITY MAP

NTS

GENERAL NOTES

1. NO PERSON SHALL PERFORM ANY CONSTRUCTION ACTIVITY OR INSTALL OBJECTS WITHIN THE PUBLIC RIGHT–OF–WAY OR EASEMENTS OF THE CITY OF RIVERSIDE WITHOUT A VALID CONSTRUCTION PERMIT OR, A STREET OPENING PERMIT OR AN ENCROACHMENT PERMIT ISSUED BY THE CITY'S PUBLIC WORKS DEPARTMENT.
2. IT SHALL BE THE RESPONSIBILITY OF THE CONTRACTOR TO CLEAR THE RIGHT–OF–WAY IN ACCORDANCE WITH THE PROVISIONS OF LAW AS IT AFFECTS EACH UTILITY INCLUDING IRRIGATION LINES AND APPURTENANCES AND AT NO COST TO THE CITY.
3. CONSTRUCTION SHALL BE IN ACCORDANCE WITH THE CITY OF RIVERSIDE DEPARTMENT OF PUBLIC WORKS, STANDARD DRAWINGS, ITS SUPPLEMENTAL NOTES AND THE STANDARD SPECIFICATIONS FOR PUBLIC WORKS CONSTRUCTION, CURRENT EDITION.
4. THE PRIVATE ENGINEER SIGNING THESE PLANS IS RESPONSIBLE FOR ASSURING THE ACCURACY AND ACCEPTABILITY OF THE WORK HEREON, IN THE EVENT OF DISCREPANCIES ARISING DURING CONSTRUCTION THE PRIVATE ENGINEER SHALL BE RESPONSIBLE FOR DETERMINING AN ACCEPTABLE SOLUTION AND REVISING THE PLANS FOR APPROVAL BY THE CITY.
5. QUANTITIES SHOWN ARE FOR INFORMATION ONLY AND THE CITY OF RIVERSIDE IS NOT RESPONSIBLE FOR THEIR ACCURACY.
6. THE DEVELOPER SHALL BE RESPONSIBLE FOR PRESERVING OR RE–ESTABLISHING AND REFERENCING SURVEY MONUMENTS DESTROYED, DISTURBED OR BURIED AS A RESULT OF CONSTRUCTION SHOWN HEREON.
7. SEE "STREET LIGHTING PLANS" FOR QUANTITY AND LOCATION OF REQUIRED STREET LIGHTS.
8. ALL FLAGGED ELEVATIONS SHALL BE STAKED IN THE FIELD BY THE PRIVATE ENGINEER.
9. WHERE NEW PAVEMENT IS TO JOIN EXISTING PAVEMENT, EDGE OF THE EXISTING PAVEMENT SHALL BE TRIMMED IN A SMOOTH AND STRAIGHT LINE, CONSTRUCT MATCH–UP PAVING AS SHOWN ON THE PLANS AND OVERLAY PAVING AS DIRECTED IN THE FIELD TO PRODUCE A SMOOTH SECTION.
10. CONSTRUCT DRIVEWAY APPROACHES PER STANDARD DRAWING 302. EXACT SIZE AND LOCATION TO BE STAKED BY THE PRIVATE ENGINEER PRIOR TO CONSTRUCTION OF THE CURB AND GUTTER.
11. ON ALL AREAS WITHIN PUBLIC RIGHT OF WAY WHERE THE FILL IS ONE (1) FOOT OR GREATER, A LETTER WILL REQUIRED FROM THE SOILS ENGINEER, CERTIFYING THE COMPACTION OF THE FILL BELOW SUBGRADE, PRIOR TO ISSUANCE OF THE CONSTRUCTION PERMIT/OR CUT SHEETS.
12. FINAL STRIPING FOR TRAFFIC CONTROL AND/OR PAVEMENT MARKING TO BE THE RESPONSIBILITY OF THE DEVELOPER. (CONTRACTOR IS TO REPLACE THE CENTERLINE STRIPING WITHIN PROJECT LIMITS).
13. THE CONTRACTOR SHALL CALL IN A LOCATION REQUEST TO UNDERGROUND SERVICE ALERT (USA) PHONE (800) 227–2600, TWO WORKING DAYS BEFORE DIGGING. NO CONSTRUCTION PERMIT WILL BE ISSUED BY THE PUBLIC WORKS DEPARTMENT INVOLVING EXCAVATION FOR UNDERGROUND FACILITIES UNLESS THE APPLICANT HAS PROVIDED AN INQUIRY IDENTIFICATION NUMBER BY U.S.A.
14. IN PAVEMENT OVERLAY AREAS, ANY DISTRESSED EXISTING PAVEMENT SHALL BE REMOVED AND REPLACED AS DIRECTED BY THE INSPECTOR PRIOR TO OVERLAYING WITH A.C. PAVING.
15. THE CONTRACTOR SHALL COORDINATE TRENCHING FOR CABLE TELEVISION WITH OTHER TRENCHING WITHIN THE SUBDIVISON.
16. THE SUBDIVIDER SHALL ARRANGE FOR A SOIL TEST TO BE MADE BY A SOILS ENGINEER AFTER THE STREETS HAVE BEEN PREPARED TO ROUGH GRADE AND PRIOR TO CURB AND GUTTER CONSTRUCTION. DEPTH OF BASE MATERIAL AND A.C. PAVING SHALL BE DETERMINED BY THE CITY OF RIVERSIDE DESIGN STANDARDS AND TEST PROCEDURES.
17. THE DEVELOPER AND/OR CONTRACTOR SHALL CONTACT THE STREET DIVISION (909) 351–6127 TO PICK UP ANY EXISTING STD. 180 BARRICADES THAT ARE BEING REMOVED. THE CITY'S INSPECTOR WILL MAKE THE FINAL DETERMINATION ON WHETHER A BARRICADE CAN BE RELOCATED..
18. THE TRAFFIC CONTROL STRIPING OBLITERATED AND/OR BADLY WORN DURING CONSTRUCTION SHALL BE RESTORED BY THE CONTRACTOR WITHIN FIVE DAYS AFTER NOTIFICATION FROM THE CITY INSPECTORS.
19. ALL TRAFFIC SIGNS SHALL BE INSTALLED PRIOR TO OPENING THE STREET TO TRAFFIC.

CONSTRUCTION NOTES / QUANTITIES

	CONSTRUCTION NOTES	QUANTITIES
	(1) CONSTRUCT 0.4' A.C. PAVEMENT OVER 0.86' CRUSHED A.B. MATERIAL PER R–3329	3,930 SF
	(2) CONSTRUCT 6" CURB & GUTTER (TYPE I) PER CITY STD.# 200.	1,090 LF
	(3) CONSTRUCT SIDEWALK PER CITY STD.# 325.	6,780 SF
	(4) GRIND 1.5" OFF EXISTING PAVEMENT, SEE DETAIL "A" ON SHEET NO. 1.	4,186 SF
	(5) CONSTRUCT 1.5" A.C. OVERLAY	27,078 SF
	(6) CONSTRUCT WHEELCHAIR RAMP PER CITY STD.# 304 (TYPE III)	3 EA
	(7) SAWCUT AND REMOVE EXISTING PAVEMENT	1,137 LF
	(8) CONSTRUCT CROSS GUTTER PER CITY STD.# 220. (W=6')	1 EA
	(9) ADJUST UTILITY COVER TO NEW GRADE	2 EA
△1	(10) INSTALL 2" X 4"REDWOOD HEADER @ EP	550 LF
△1	(11) CONSTRUCT PARKWAY DRAIN PER A.P.W.A. STD. 151-0 (W=5')	2 EA
△1	(12) CONSTRUCT CATCHBASIN PER CITY STD. 405 (W=6')	1 EA

M.W.D. NOTE:

THE CONTRACTOR SHALL NOTIFY METROPOLITAN WATER DISTRICT AT LEAST TWO WORKING DAYS (MONDAY THROUGH THURSDAY) PRIOR TO ANY WORK IN THE VICINITY OF METROPOLITAN WATER DISTRICT RIGHT OF WAY OR EASEMENTS. CONTACT MR. JOE MIRONE AT OUR WATER SYSTEM OPERATIONS GROUP (909) 776–2664.

METROPOLITAN'S PIPELINE IS ADEQUATE FOR AASHTO H–20 LOADING PROVIDED THAT THE COVER OVER THE PIPELINE IS NOT LESS THAN FOUR FEET OR THE COVER IS NOT SUBSTANTIALY INCREASED. IF THE TEMPORARY COVER OVER THE PIPELINE DURING CONSTRUCTION IS BETWEEN THREE AND FOUR FEET, EQUIPMENT MUST BE RESTRICTED TO THAT WHICH IMPOSES LOADS NO GREATER THAN AASHTO H–10. IF THE COVER IS BETWEEN TWO AND THREE, EQUIPMENT MUST BE RESTRICTED TO THAT OF A CATERPILLAR D–4 TRACT TYPE TRACTOR. IF THE COVER IS LESS THAN TWO FEET ONLY HAND EQUIPMENT MAY BE USED. ALSO, IF THE CONTRACTOR PLANS TO USE ANY EQUIPMENT OVER METROPOLITAN'S PIPELINE WHICH WILL BE NECESSARY GREATER THAN AASH TO H–20 IT WILL BE NECESSARY TO SUBMIT THE SPECIFICATIONS OF SUCH EQUIPMENT FOR OUR REVIEW AND APPROVAL AT LEAST ONE WEEK PRIOR TO USE.

THE 96" PIPE IS SCHEDULE 316PS, PRESTRESSED CONCRETE PIPE
PROJECT COMPLETED UNDER WORK ORDER NO. 5–3763/BOX SPRINGS FEEDER

LEGEND

P.P.	POWER POLE	F.G.	FINISH GRADE
F.H.	FIRE HYDRANT	F.F.	FINISHED FLOOR
INV.	INVERT	C.B.	CATCH BASIN
T.G.	TOP OF GRATE	H.P.	HIGH POINT
F.L.	FLOW LINE	G.B.	GRADE BREAK
TYP.	TYPICAL	S.D.	STORM DRAIN
TC	TOP OF CURB	DWY	DRIVEWAY
EX.	EXISTING	CL	CENTERLINE
LP	LOW POINT	PAD	PAD ELEVATION
SF	SQUARE FEET	CY	CUBIC YARD
TN	TONS		

A.C. PAVEMENT

GRINDING AND A.C. OVERLAY

CONCRETE

WORK DEFINED BY REVISION △1 DESIGNED UNDER THE SUPERVISION OF:

JOHN A. FRIEDRICH R.C.E. 27861
FOR:
GFB-FRIEDRICH & ASSOC.
6529 RIVERSIDE AVE STE. 230
RIVERSIDE, CA
(951) 781-0811

John A. Friedrich 9-24-04

REGISTERED PROFESSIONAL ENGINEER — JOHN A. FRIEDRICH — No. 27861 — Exp: 3-31-06 — CIVIL — STATE OF CALIFORNIA

REGISTERED PROFESSIONAL ENGINEER — SCOTT R. HILDEBRANDT — NO. C44762 — EXP. 3–31–06 — CIVIL — STATE OF CALIFORNIA

CITY BUSINESS TAX CERTIFICATE NO. 5751 EXP. 12–31–04

UNDERGROUND SERVICE ALERT
CALL: TOLL FREE
1-800
227-2600
TWO WORKING DAYS BEFORE YOU DIG

ALBERT A. WEBB ASSOCIATES
ENGINEERING CONSULTANTS
CIVIL ENGINEERS
3788 McCRAY STREET
RIVERSIDE, CA 92506
(909) 686–1070
APPROVED BY [signature] DATE 4-16-04
R.C.E. NO. C44762
W.O. 02–0337 FOR: MAGNON DEVELOPMENT F.B. 2002

BENCH MARK:
RIVERSIDE CITY BENCHMARK L1–A3
ELEV. = 1534.311
P.K. NAIL AND CITY ENGINEER TAG IN THE BASE OF A STREET LIGHT POLE ALONG THE NORTHERLY CURB OF EASTRIDGE AVE., 82 FEET WESTERLY OF BOX SPRINGS BLVD. ADJUSTED AND ENTERED MAY 1997.

MARK	REVISIONS	APPR.	DATE
△1	ADDED E'LY IMPROVEMENTS TO RIVER RUN	RJZ	1.4.05

DESIGNED BY: RJP DRAWN BY: TJS CHECKED BY RJP

CITY OF RIVERSIDE, CALIFORNIA
PUBLIC WORKS DEPARTMENT

APPROVED BY	BY	DATE
PRINCIPAL ENGINEER	PH	5/6/04
PARK DEPARTMENT	—	—
TRAFFIC DIVISION	[initials]	5/6/04
STREET SERVICES	KB	4/19/04

APPROVED BY [signature] CITY ENGINEER
DATE 5/6/04

STREET IMPROVEMENT PLAN
EASTRIDGE DISTRIBUTION CENTER
PARCEL MAP NO. 24535
TITLE AND INDEX SHEET
SCALE: HORIZ.: AS NOTED VERT.: N/A

PW03–0361
ACCOUNT NO. —
DRAWING NUMBER
R-3785
SHEET 1 OF 4
02–0337

INDEXED 5-18-04 LH

G:\2002\02-0337\DwgSPro\Design\02337ST.pro|4/16/2004|9:52:43AM

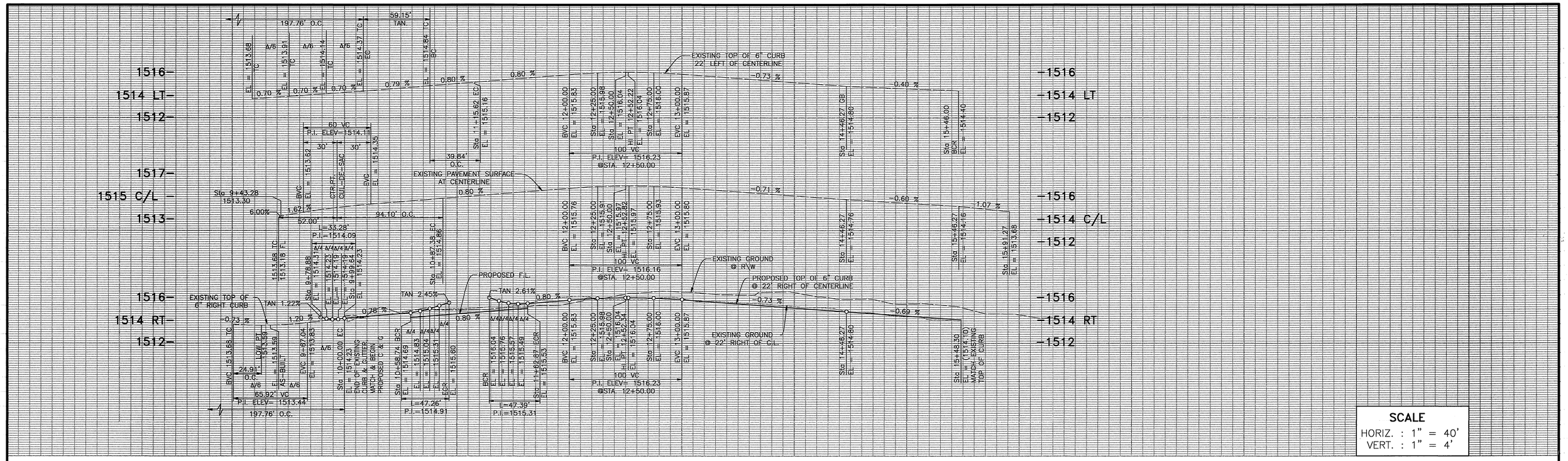

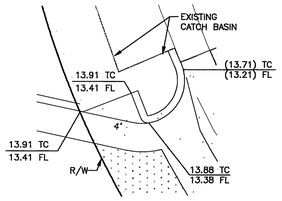

DETAIL "C"
SCALE: 1" = 5'

SCALE
HORIZ. : 1" = 40'
VERT. : 1" = 4'

CURVE DATA

	Δ	R	L	T
(A)	127°13'32"	3.00'	6.66'	6.05'
(B)	54°28'29"	35.00'	33.28'	18.02'
(C)	77°21'53"	35.00'	47.26'	28.02'
(D)	77°34'23"	35.00'	47.39'	28.13'

A.C. OVERLAY
A.C. PAVEMENT
GRINDING AND A.C. OVERLAY
CONCRETE

CONSTRUCTION NOTES

1. CONSTRUCT 0.4' A.C. PAVEMENT OVER 0.86' CRUSHED A.B. MATERIAL PER R-3329.
2. CONSTRUCT 6" CURB & GUTTER (TYPE I) PER CITY STD.# 200.
3. CONSTRUCT SIDEWALK PER CITY STD.# 325.
4. GRIND 1.5" OFF EXISTING PAVEMENT, SEE DETAIL "A" ON SHEET NO. 1.
5. CONSTRUCT 1.5" A.C. OVERLAY
6. CONSTRUCT WHEELCHAIR RAMP PER CITY STD.# 304 (TYPE III)
7. SAWCUT AND REMOVE EXISTING PAVEMENT
8. CONSTRUCT CROSS GUTTER PER CITY STD.# 220. (W=6')
9. ADJUST UTILITY COVER TO NEW GRADE

REGISTERED PROFESSIONAL ENGINEER
SCOTT R. HILDEBRANDT
NO. C44762
EXP. 3-31-06
CIVIL
STATE OF CALIFORNIA

UNDERGROUND SERVICE ALERT
CALL: TOLL FREE
1-800
227-2600
TWO WORKING DAYS BEFORE YOU DIG

CITY BUSINESS TAX CERTIFICATE NO. 5751 EXP. 12-31-04

ALBERT A. WEBB ASSOCIATES
ENGINEERING CONSULTANTS
CIVIL ENGINEERS
3788 McCRAY STREET
RIVERSIDE, CA 92506
(909) 686-1070
APPROVED BY _____ DATE 4-16-04
R.C.E. NO. C44762

W.O. 02-0337 FOR: MAGNON DEVELOPMENT F.B. 2002

BENCH MARK:

RIVERSIDE CITY BENCHMARK L1-A3
ELEV. = 1534.311

P.K. NAIL AND CITY ENGINEER TAG IN THE BASE OF A STREET LIGHT POLE ALONG THE NORTHERLY CURB OF EASTRIDGE AVE., 82 FEET WESTERLY OF BOX SPRINGS BLVD. ADJUSTED AND ENTERED MAY 1997.

MARK	REVISIONS	APPR.	DATE

DESIGNED BY: RJP DRAWN BY: TJS CHECKED BY RJP

CITY OF RIVERSIDE, CALIFORNIA
PUBLIC WORKS DEPARTMENT

APPROVED BY	BY	DATE
PRINCIPAL ENGINEER		5/6/04
PARK DEPARTMENT		
TRAFFIC DIVISION		5/6/04
STREET SERVICES		4/19/04

APPROVED BY _____ CITY ENGINEER
DATE 5/6/04

STREET IMPROVEMENT PLAN

EASTRIDGE DISTRIBUTION CENTER
PARCEL MAP NO. 24535

LANCE DRIVE – STA. 10+00.00 TO 15+48.30

SCALE: HORIZ.: 1" = 40' VERT.: 1" = 4'

PW03-0361
ACCOUNT NO.
DRAWING NUMBER
R-3785
SHEET 2 OF 4
02-0337

INDEXED 5-18-04 GH

R:\2002\02-0337\Dwg\Pro\Dest\grv\02337ST pr.dwg 4/16/2004 8:52:55 AM

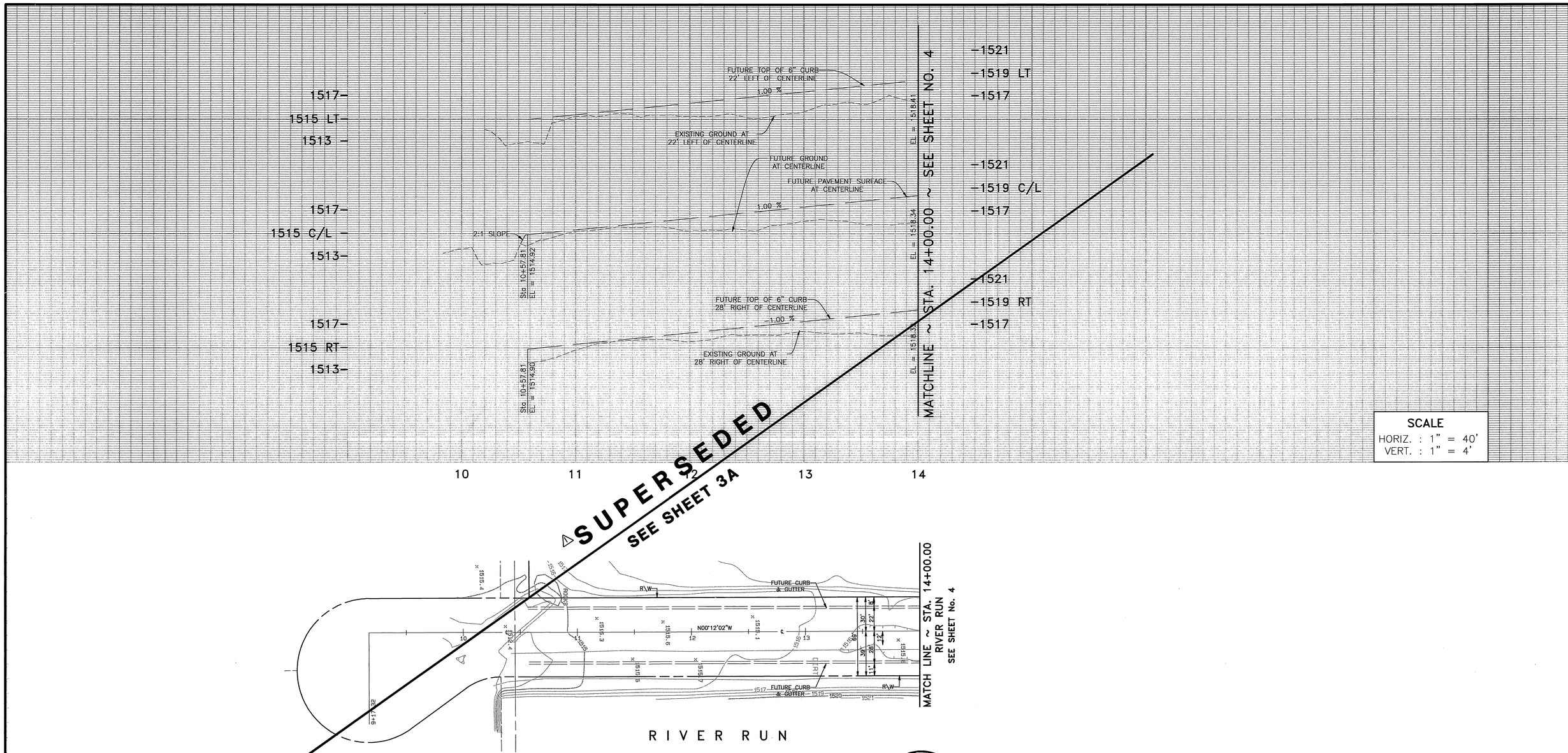

WORK DEFINED BY REVISION 1 DESIGNED UNDER THE SUPERVISION OF:

JOHN A. FRIEDRICH R.C.E. 27861
FOR:
GFB-FRIEDRICH & ASSOC.
6529 RIVERSIDE AVE STE. 230
RIVERSIDE, CA
(951) 781-0811

John A. Friedrich 9-24-04

REGISTERED PROFESSIONAL ENGINEER
JOHN A. FRIEDRICH
No. 27861
Exp: 3-31-06
CIVIL
STATE OF CALIFORNIA

REGISTERED PROFESSIONAL ENGINEER
SCOTT R. HILDEBRANDT
NO. C44762
EXP. 3-31-06
CIVIL
STATE OF CALIFORNIA

GRAPHIC SCALE 1"=40'

40 20 0 40 80 120

UNDERGROUND SERVICE ALERT
CALL: TOLL FREE
1·800
227·2600
TWO WORKING DAYS BEFORE YOU DIG

CITY BUSINESS TAX CERTIFICATE NO. 5751 EXP. 12-31-04

ALBERT A. WEBB ASSOCIATES
ENGINEERING CONSULTANTS
CIVIL ENGINEERS
3788 McCRAY STREET
RIVERSIDE, CA 92506
(909) 686-1070

APPROVED BY [signature] DATE 4-16-04
R.C.E. NO. C44762

W.O. 02-0337 FOR: MAGNON DEVELOPMENT F.B. 2002

BENCH MARK:

RIVERSIDE CITY BENCHMARK L1-A3
ELEV. = 1534.311

P.K. NAIL AND CITY ENGINEER TAG IN THE BASE OF A STREET LIGHT POLE ALONG THE NORTHERLY CURB OF EASTRIDGE AVE., 82 FEET WESTERLY OF BOX SPRINGS BLVD. ADJUSTED AND ENTERED MAY 1997.

MARK	REVISIONS	APPR.	DATE
1	SHEET 3 SUPERSEDED BY SHEET 3A		

DESIGNED BY: RJP DRAWN BY: TJS CHECKED BY RJP

CITY OF RIVERSIDE, CALIFORNIA
PUBLIC WORKS DEPARTMENT

APPROVED BY	BY	DATE
PRINCIPAL ENGINEER	[signature]	5/6/04
PARK DEPARTMENT		
TRAFFIC DIVISION	[signature]	5/6/04
STREET SERVICES	[signature]	4/19/04

APPROVED BY [signature]
CITY ENGINEER
DATE 5/6/04

STREET IMPROVEMENT PLAN

EASTRIDGE DISTRIBUTION CENTER
PARCEL MAP NO. 24535

RIVER RUN – STA. 10+57.49 TO 14+00.00

SCALE: HORIZ.: 1" = 40' VERT.: 1" = 4'

PW03-0361

ACCOUNT NO.

DRAWING NUMBER
R-3785

SHEET 3 OF 4

02-0337

INDEXED 5-18-04 [initials]

G:\2002\02-0337\DwgSPro\Design\02337ST.prd4/16/2004 9:16:55AM

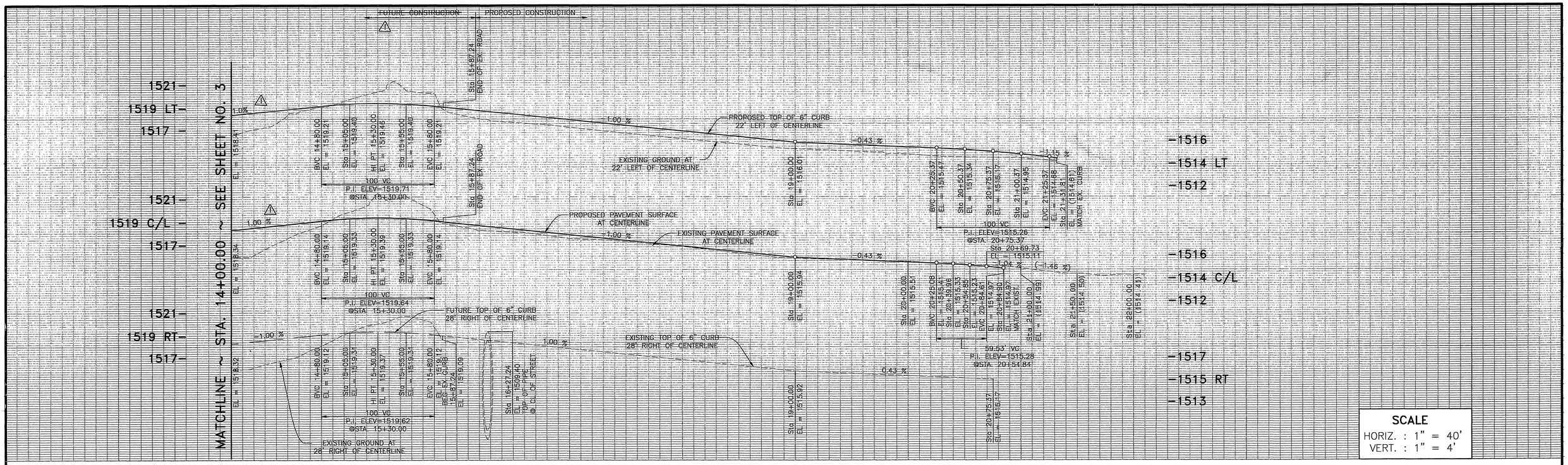

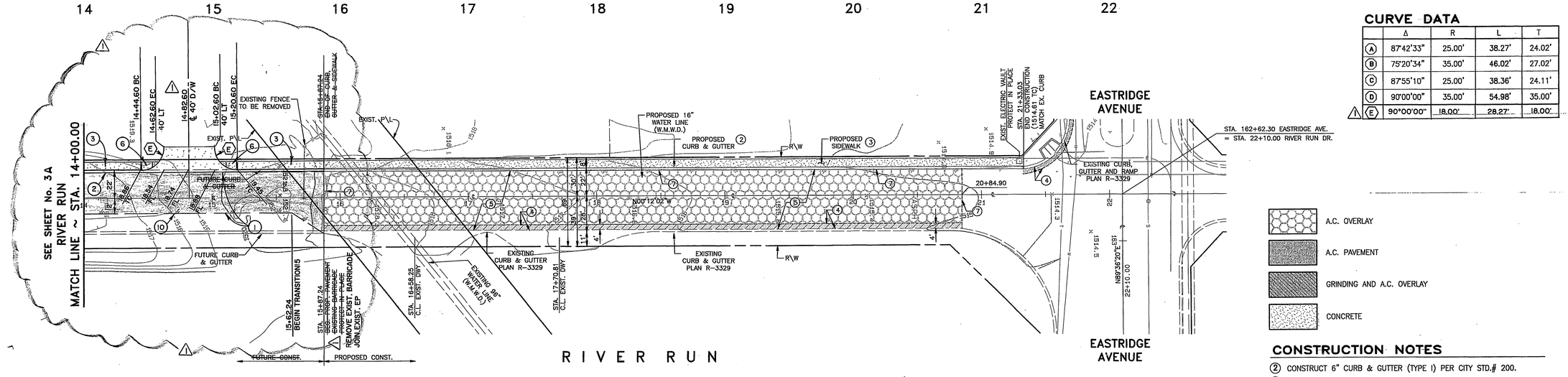

CURVE DATA

	Δ	R	L	T
(A)	87°42'33"	25.00'	38.27'	24.02'
(B)	75°20'34"	35.00'	46.02'	27.02'
(C)	87°55'10"	25.00'	38.36'	24.11'
(D)	90°00'00"	35.00'	54.98'	35.00'
⚠ (E)	90°00'00"	18.00'	28.27'	18.00'

A.C. OVERLAY
A.C. PAVEMENT
GRINDING AND A.C. OVERLAY
CONCRETE

CONSTRUCTION NOTES

(2) CONSTRUCT 6" CURB & GUTTER (TYPE I) PER CITY STD.# 200.
(3) CONSTRUCT SIDEWALK PER CITY STD.# 325.
(4) GRIND 1.5" OFF EXISTING PAVEMENT, SEE DETAIL "A" ON SHEET NO. 1.
(5) CONSTRUCT 1.5" A.C. OVERLAY
(7) SAWCUT AND REMOVE EXISTING PAVEMENT
⚠ (1) CONSTRUCT 0.4' AC PAVEMENT OVER 0.86' CRUSHED AB MATERIAL
⚠ (6) CONSTRUCT WHEELCHAIR RAMP PER CITY STD. 304 (TYPE III)
⚠ (10) INSTALL 2" X 4" REDWOOD HEADER @ EP

GRAPHIC SCALE 1"=40'
40 20 0 40 80 120

REGISTERED PROFESSIONAL ENGINEER
JOHN A. FRIEDRICH
No. 27861
Exp: 3-31-06
CIVIL
STATE OF CALIFORNIA

WORK DEFINED BY REVISION ⚠ DESIGNED UNDER THE SUPERVISION OF:

JOHN A. FRIEDRICH R.C.E. 27861
FOR:
GFB-FRIEDRICH & ASSOC.
6529 RIVERSIDE AVE STE. 230
RIVERSIDE, CA
(951) 781-0611

9-24-04

REGISTERED PROFESSIONAL ENGINEER
SCOTT R. HILDEBRANDT
NO. C44762
EXP. 3-31-06
CIVIL
STATE OF CALIFORNIA

UNDERGROUND SERVICE ALERT
CALL: TOLL FREE
1-800
227-2600
TWO WORKING DAYS BEFORE YOU DIG

CITY BUSINESS TAX CERTIFICATE NO. 5751 EXP. 12-31-04

ALBERT A. WEBB ASSOCIATES
ENGINEERING CONSULTANTS
CIVIL ENGINEERS
3788 McCRAY STREET
RIVERSIDE, CA 92506
(909) 686-1070

APPROVED BY: [signature] DATE 4-16-04
R.C.E. NO. C44762

W.O. 02-0337 FOR: MAGNON DEVELOPMENT F.B. 2002

BENCH MARK:

RIVERSIDE CITY BENCHMARK L1-A3
ELEV. = 1534.311

P.K. NAIL AND CITY ENGINEER TAG IN THE BASE OF A STREET LIGHT POLE ALONG THE NORTHERLY CURB OF EASTRIDGE AVE., 82 FEET WESTERLY OF BOX SPRINGS BLVD. ADJUSTED AND ENTERED MAY 1997.

MARK	REVISIONS	APPR.	DATE
⚠	ADDED EASTERLY IMPROVEMENTS	RJR	1-4-05

DESIGNED BY: RJP DRAWN BY: TJS CHECKED BY RJP

CITY OF RIVERSIDE, CALIFORNIA
PUBLIC WORKS DEPARTMENT

	BY	DATE
APPROVED BY		
PRINCIPAL ENGINEER	[signature]	5/16/04
PARK DEPARTMENT		
TRAFFIC DIVISION	[signature]	5/16/04
STREET SERVICES	[signature]	5/18/04

APPROVED BY: [signature] CITY ENGINEER
DATE 5/16/04

STREET IMPROVEMENT PLAN

EASTRIDGE DISTRIBUTION CENTER PARCEL MAP NO. 24535

RIVER RUN – STA. 14+00.00 TO 21+68.99

SCALE: HORIZ.: 1" = 40' VERT.: 1" = 4'

PW03-0361
ACCOUNT NO.
DRAWING NUMBER
R-3785
SHEET 4 OF 4
02-0337

INDEXED 5-18-04 GH

G:\2002\02-0337\DwgSPrv\Design\02337ST.dgn 4/16/2004 5:17:22 AM

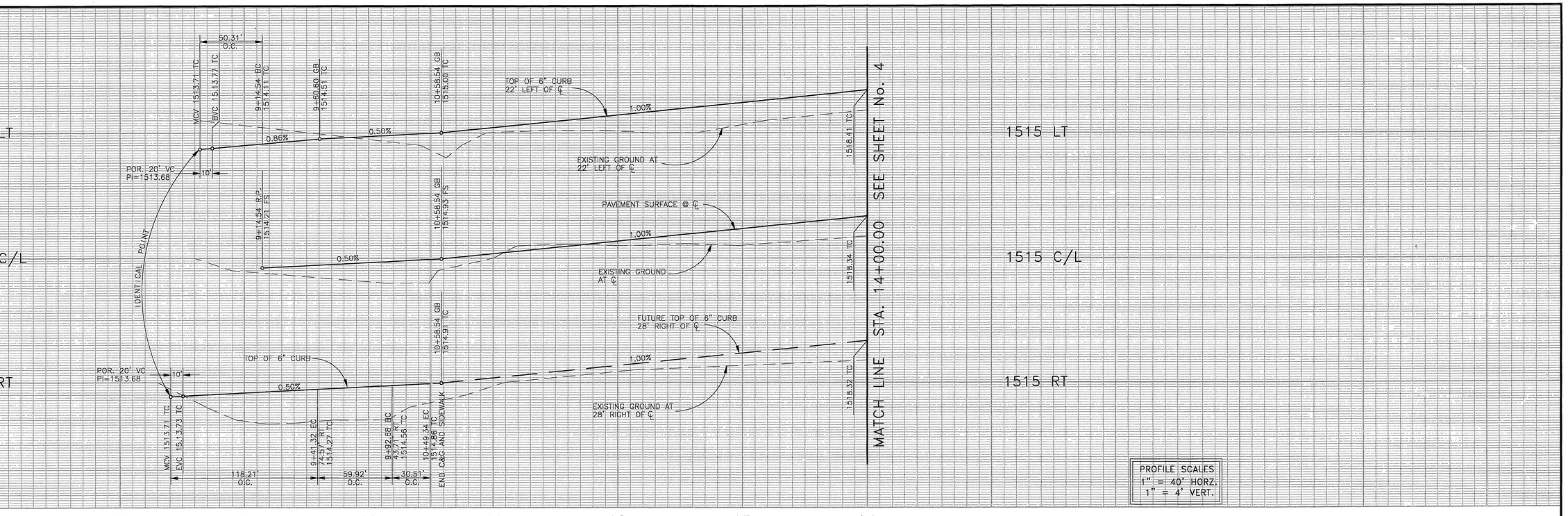

CURVE DATA					
	Δ	R	L	T	COMMENTS
(A)	64°40'49"	18.00'	20.32'	11.40'	D/W CURB
(B)	211°00'00"	52.00'	191.50'	---	FULL CURVE
(C)	31°00'00"	110.00'	59.52'	30.51'	CURB
(D)	90°00'00"	18.00'	28.27'	18.00'	D/W CURB
(E)	211°00'00"	60.00'	220.96'	---	R/W
(F)	31°00'00"	81.00'	43.83'	22.46'	R/W
(G)	31°47'18"	200.00'	110.96'	56.95'	CROWN LINE

CONSTRUCTION NOTES

1. CONSTRUCT 0.4' A.C. PAVEMENT OVER 0.85' CRUSHED A.B. PER R-3329
2. CONSTRUCT 6" CURB & GUTTER PER CITY STD. 200
3. CONSTRUCT SIDEWALK PER CITY STD. 325
6. CONSTRUCT WHEELCHAIR RAMP PER CITY STD. 304 (TYPE III)
10. INSTALL 2" X 4" REDWOOD HEADER @ EP
11. CONSTRUCT PARKWAY DRAIN PER A.P.W.A STD 151-0 (W=5')
12. CONSTRUCT CATCH BASIN PER CITY STD. 405 (W=6')

A.C. PAVEMENT

CONCRETE

WORK DEFINED BY REVISION 2 DESIGNED UNDER THE SUPERVISION OF:

JOHN A FRIEDRICH R.C.E. 27861 FOR GFB-FRIEDRICH & ASSOC.
(951) 781-0811

SIGNATURE 9-24-04 DATE

Underground Service Alert
DIG ALERT TOLL FREE
Call: TOLL FREE 1-800 227-2600
TWO WORKING DAYS BEFORE YOU DIG

BENCH MARK: CITY OF RIVERSIDE B.M. L1-A3

PK NAIL AND CITY ENGINEER TAG IN THE BASE OF A STREET LIGHT POLE ALONG THE NORTHERLY CURB OF EASTRIDGE AVE., 82 FEET WESTERLY OF BOX SPRINGS BLVD. ADJUSTED AND ENTERED MAY 1997

ELEV.= 1534.311

REGISTERED PROFESSIONAL ENGINEER JOHN A. FRIEDRICH No. C27861 Exp. 3/31/06 CIVIL STATE OF CALIFORNIA

CITY OF RIVERSIDE BUSINESS TAX CERTIFICATE No.60137 EXP. DATE 5-2-05

PREPARED BY:
GFB-FRIEDRICH & ASSOC., INC.
CONSULTING CIVIL ENGINEERS
6529 RIVERSIDE AVENUE, STE. 230
RIVERSIDE, CA 92506
(951) 781-0811
JOHN A. FRIEDRICH R.C.E. 27861 EXP 3-31-06 9-24-04 DATE

MARK	REVISIONS	BY	APPR.	DATE
2	REVISE R/W & ADJUST END OF SIDEWALK	MF	RJZ	9-9-05 5-16-05

DESIGNED BY GRW DRAWN BY GRW CHECKED BY JAF

CITY OF RIVERSIDE
DEPARTMENT OF PUBLIC WORKS

	BY	DATE	
APPROVED BY			APPROVED BY
PRINCIPAL ENGR.		10/14/04	CITY ENGINEER
PARK DEPARTMENT	—	—	
TRAFFIC DIVISION		10/14/04	DATE 10/15/04
STREET SERVICES		9/14/04	

STREET IMPROVEMENT PLAN

EASTRIDGE DISTRIBUTION CENTER

RIVER RUN - STA. 9+14.54 TO 14+00.00

SCALE: HORIZ: 1"=40' VERT: 1"=4'

PW03-0361
PROJECT NO.
R-3785
2 3A
SHEET OF 4
FILE NO.:

INDEXED 12-9-04 GH

NAME: RIVERUN.DWG DATE: SEP 22, 2004 TIME: 10:46 AM