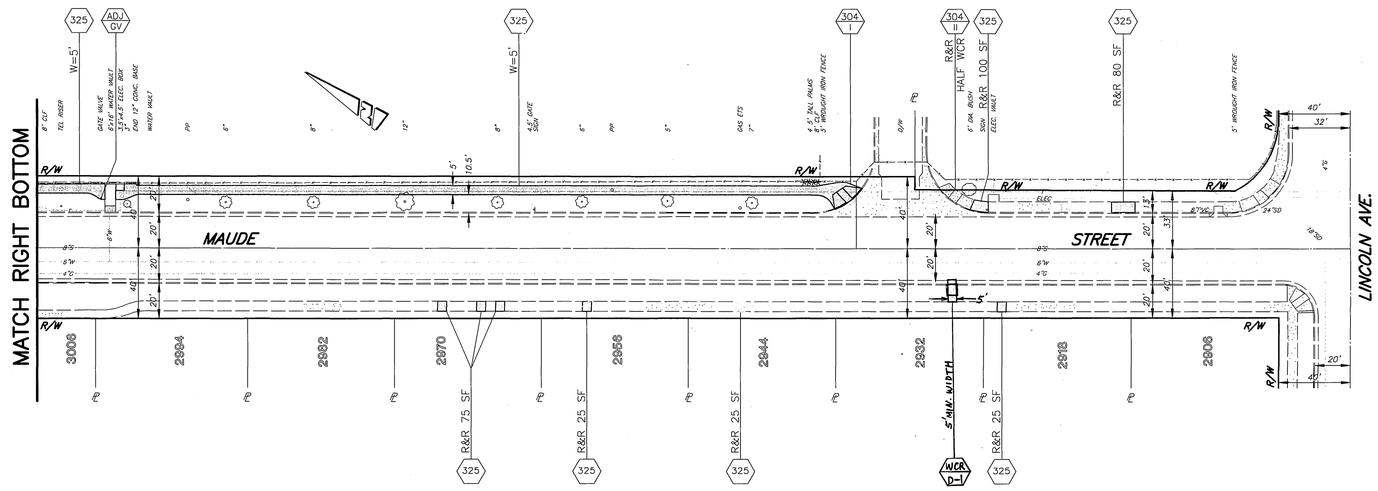

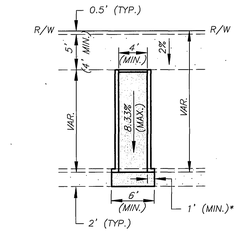

* : 1' MINIMUM GUTTER CROSS SLOPE TRANSITION LENGTH FROM EXIST. SLOPE TO 5% (MAX.) SLOPE.

DIRECTIONAL WCR TYPE D-1

(NTS)

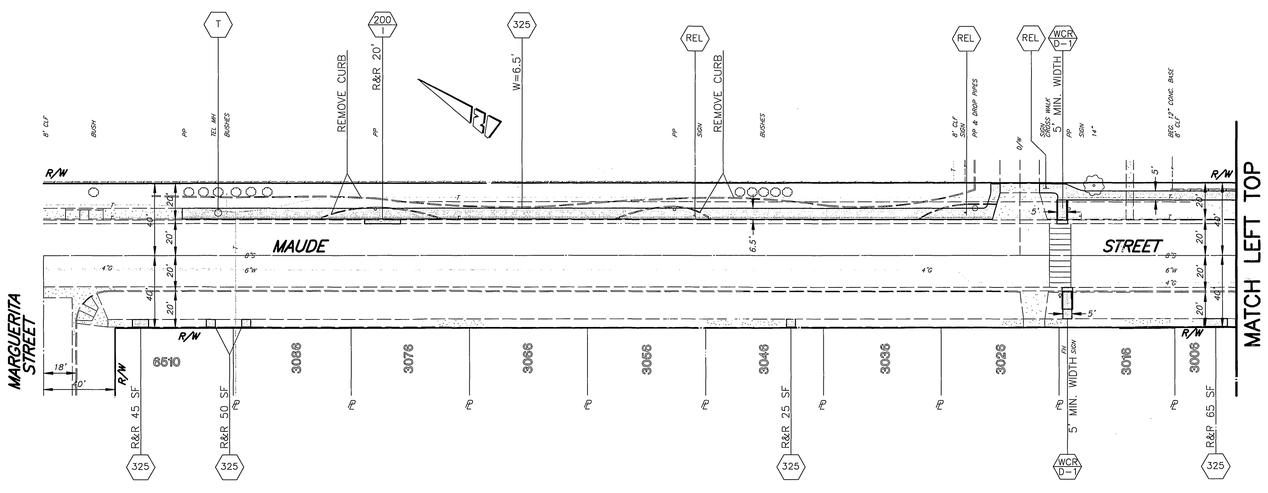

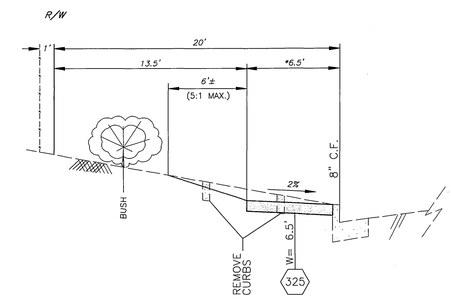

CURB LINE SIDEWALK TYPICAL SECTION

(NTS)

* : SIDEWALK WIDTH SHALL BE ADJUSTED TO PROVIDE A 4' CLEAR PATHWAY @ ANY OBSTRUCTION.

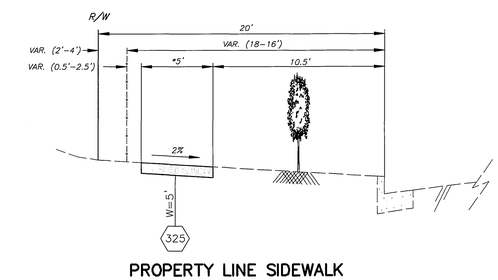

PROPERTY LINE SIDEWALK TYPICAL SECTION

(NTS)

* : SIDEWALK WIDTH SHALL BE ADJUSTED TO PROVIDE A 4' CLEAR PATHWAY @ ANY OBSTRUCTION.

SIDEWALK SHALL PARALLEL WITH CURB.

GENERAL CONSTRUCTION NOTES

1. EXISTING UTILITIES, SHOWN ON THIS PLAN, ARE PLOTTED FROM UTILITY RECORDS. THE CONTRACTOR IS REQUIRED TO TAKE DUE PRECAUTIONARY MEASURES TO LOCATE AND
2. PRIME CONTRACTORS BIDDING THIS WORK SHALL HAVE A CLASS A OR C-12 LICENSE.
3. TREES AND SHRUBS, AFFECTED BY THE PROPOSED SIDEWALK CONSTRUCTION, SHALL BE TRIMMED TO AT LEAST 8' VERTICALLY ABOVE THE SIDEWALK SURFACE AND TO AT LEAST 3' LATERALLY OF THE SIDEWALK, WHERE RIGHT-OF-WAY PERMITS.
4. MAIL BOXES, INTERFERING WITH PROPOSED SIDEWALK CONSTRUCTION, SHALL BE TEMPORARILY RELOCATED TO ENABLE PROPERTY OWNERS TO RECEIVE THEIR MAIL AND BE REINSTALLED IN FINAL POSITION BY THE CONTRACTOR.
5. WATER METERS, GAS METERS AND ALL STREET PULL BOXES AFFECTED BY CONSTRUCTION, SHALL BE ADJUSTED TO THE PROPOSED SIDEWALK GRADE.
6. EXISTING SPRINKLERS AND IRRIGATION LINES, AFFECTED BY THE CONSTRUCTION OF THE PROPOSED SIDEWALK, SHALL BE RELOCATED TO THE BACK OF THE SIDEWALK OR MODIFIED TO COVER EXISTING IRRIGATION AREA EXCEPT THE NEW PAVED AREA.

SPECIFIC CONSTRUCTION NOTES

- ⬢ NUMBERS, ABOVE 100 IN A HEXAGON ON THE PLAN, REFER TO THE RESPECTIVE STANDARD DRAWING AND SHALL BE CONSTRUCTED ACCORDINGLY, UNLESS MODIFICATIONS ARE NOTED ON THE PLAN OR COVER SHEET. ANY NUMBER SHOWN BELOW THE STANDARD DRAWING NUMBER INDICATES THE SPECIFIC ALTERNATE TO BE CONSTRUCTED.
- ADJ GV — WATER GATE VALVE WIIL BE ADJUSTED BT THE CONTRACTOR.
- REL — RELOCATE STREET SIGNS.
- T — TELEPHONE MANHOLE COVER WILL BE ADJUSTED BY SBC.
- WCR D-1 — DIRECTIONAL WHEELCHAIR RAMP TYPE I, SEE DETAIL.

IMPORTANT NOTICE
Section 4216/4217 of the Government Code requires a Dig Alert Identification Number to be issued before a Permit to Excavate will be valid. For your Dig Alert I.D. Number call
CALL TOLL FREE
48 HOURS BEFORE YOU DIG
UNDERGROUND SERVICE ALERT
1-800-227-2600

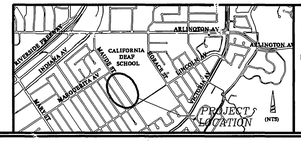

ENGINEER IN RESPONSIBLE CHARGE
PHILIP L. HANNAWI
R.C.E. No. 44747 expires 3/31/2006
DATE 11/8/04

REGISTERED PROFESSIONAL ENGINEER PHILIP L. HANNAWI No. 44747 Exp. 3/31/2006 CIVIL STATE OF CALIFORNIA

MARK	REVISIONS	APPR.	DATE

DESIGNED BY FYL DRAWN BY FYL CHECKED BY PH

CITY OF RIVERSIDE, CALIFORNIA
PUBLIC WORKS DEPARTMENT

APPROVED BY	BY	DATE
PRINCIPAL ENGINEER		11/8/04
CONTRACT ADMIN.		11/8/04
SURVEYOR		11/8/04
STREET SERVICES		11/8/04
TRAFFIC DIVISION		11/8/04

APPROVED BY
CITY ENGINEER
DATE 11/8/04

MAUDE ST. SIDEWALK CONSTRUCTION
(MARGUERITA AVE. TO LINCOLN AVE.)

HORIZ. SCALE: 1" = 40'

ACCT. NO.: 9582727152-440223XX

R-3810

SHEET 1 OF 1

FILE: COMMON/COMPLETE/R3810

INDEXED 12-6-09 LH