RIVERSIDE CALIFORNIA
PUBLIC WORKS DEPARTMENT

CITY OF RIVERSIDE

FIVE POINTS STREET IMPROVEMENT PROJECT

GENERAL CONSTRUCTION NOTES

1. THE CONTRACTOR SHALL PROVIDE AND MAINTAIN TWO TWELVE-FOOT-WIDE LANES FOR TWO-WAY TRAFFIC AT ALL TIMES. NO REDUCTION OF THE TRAVELED WAY WIDTH SHALL BE PERMITTED BEFORE 8:30 A.M. NOR AFTER 3:30 P.M. ON ANY STREET UNLESS PRIOR APPROVAL IN WRITING IS OBTAINED FROM THE DIRECTOR OF PUBLIC WORKS.
2. CONSTRUCTION SHALL BE IN ACCORDANCE WITH THE CITY OF RIVERSIDE STANDARD DRAWINGS AND STANDARD SPECIFICATIONS FOR PUBLIC WORKS CONSTRUCTION, 2009 EDITION.
3. EXISTING UTILITIES SHOWN ON THIS PLAN ARE PLOTTED FROM UTILITY RECORDS. THE CONTRACTOR IS REQUIRED TO TAKE DUE PRECAUTIONARY MEASURES TO LOCATE AND PROTECT ALL UTILITIES WHETHER OR NOT SHOWN ON THIS PLAN.
4. CONFLICTING UTILITIES SHOWN WITHIN CONSTRUCTION AREA WILL BE RELOCATED PRIOR TO CONSTRUCTION.
5. ALL STREET PULL BOXES, AFFECTED BY CONSTRUCTION, SHALL BE ADJUSTED TO THE PROPOSED GRADE.
6. ALL ELEVATIONS SHOWN ON THE PLANS SHALL BE STAKED IN THE FIELD, EXCEPT FOR ELEVATIONS SHOWN IN PARENTHESIS WHICH DENOTE EXISTING GRADES.
7. PRIME CONTRACTOR BIDDING THIS WORK SHALL HAVE A CLASS "A"
8. THE SEAM BETWEEN PASSES OF THE AC OVERLAY SHALL COINCIDE, AS CLOSE AS POSSIBLE, TO THE LANE LINES.
9. COLD MILLING TYPE I SHALL BE AS DIRECTED BY THE ENGINEER AND AS DESCRIBED IN SPECIAL PROVISIONS.
10. IN PAVEMENT OVERLAY AREAS, ANY DISTRESSED EXISTING PAVEMENT SHALL BE REMOVED AND REPLACED AS DIRECTED BY THE INSPECTOR AFTER COLD-MILLING AND PRIOR TO OVERLAYING WITH ARHM-GG PAVING.

SPECIFIC CONSTRUCTION NOTES

- (hexagon) NUMBERS ABOVE 100 IN A HEXAGON ON THE PLAN REFER TO THE RESPECTIVE STANDARD DRAWING AND SHALL BE CONSTRUCTED ACCORDINGLY. UNLESS MODIFICATIONS ARE NOTED ON THE PLAN OR COVER SHEET. ANY NUMBER SHOWN BELOW THE STANDARD DRAWING NUMBER INDICATES THE SPECIFIC ALTERNATE TO BE CONSTRUCTED.
- ADJ/XX — ADJUST EXISTING FACILITY TO GRADE. THE FOLLOWING IS THE LEGEND: GV = GATE VALVE; MH = MAN HOLE COVER; M = MONITORING WELL, VLT = VAULT
- G — ETS VALVE BOX WILL BE RELOCATED BY GAS COMPANY.
- G1 — 5' WIDE AND 0.1' MINIMUM DEPTH GRIND WITH 0.1' VARIABLE DEPTH OVERLAY
- G2 — VARIABLE WIDTH AND 0.1' MINIMUM DEPTH (0.2' MAX) WITH A 0.1' VARIABLE DEPTH ARHM OVERLAY
- OL — CONSTRUCT VARIABLE THICKNESS ARHM-GG AC OVERLAY. THICKNESS OF VARIABLE OVERLAY SHALL BE 0.1' MIN AND 0.2' MAX. WHERE VARIABLE OVERLAY EXCEEDS 0.2', A 0.1' MIN D.G.A.C. LEVELING COURSE SHALL BE PROVIDED.
- R/X — REMOVE STREET TREE. THE FOLLOWING IS THE LEGEND: 1 = CLASS 1, TREE DIAMETER SIZE SHALL BE OVER 6" TO 18"; 2 = CLASS 2, TREE DIAMETER SIZE SHALL BE OVER 18" TO 36"
- S1 — CONSTRUCT STRUCTURAL SECTION WITH 4" AC OVER 6" AGGREGATE BASE. (INCLUDES OVERLAY) (revision 2)
- S2 — CONSTRUCT STRUCTURAL SECTION WITH 3" AC OVER 6" AGGREGATE BASE. (INCUDES OVERLAY)
- S3 — CONSTRUCT STRUCTURAL SECTION WITH 4" AC OVER 8" AGGREGATE BASE. (INCLUDES OVERLAY)
- S4 — CONSTRUCT STRUCTURAL SECTION WITH 6" AC OVER 8" AGGREGATE BASE. (INCLUDES OVERLAY)
- COB — COBBLE MEDIAN BAND/SURFACE, FOR DETAIL SEE SPECIAL PROVISIONS.
- LS — CONSTRUCT LANDSCAPE AND IRRIGATION PER DRAWING R-4019L
- W1 — EXISTING WATER METER TO BE ABANDONED
- W2 — EXISTING WATER METER TO BE RELOCATED
- R&R/XX — REMOVE AND REPLACE EXISTING FACILITY (XX = TYPE PER PLAN). THE FOLLOWING IS THE LEGEND: SWK = SIDEWALK; RMP = PED RAMP WING; DWY = DRIVEWAY; S1 = STRUCTURAL SECTION; C&G = CURB AND GUTTER,
- REL/XX — RELOCATE EXISTING FACILITY (XX = TYPE PER PLAN). THE FOLLOWING IS THE LEGEND: ACC = ACCESSORIES (TRASH CONTAINER, MAILBOX AND PAPER STAND); SWR = SEWER MH; MB = MAIL BOX; SL = STREET LIGHT, TR = TREE; FH = FIRE HYDRANT; BUS = BUS PAD SHELTER & ACCESSORIES
- 325M — MODIFIED SIDEWALK: SIDEWALK 2% FROM BLDG TO 3' BEHIND CURB, STRAIGHT GRADE TO BACK OF CURB. LIMITS TO BE IDENTIFIED IN THE FIELD PRIOR TO REMOVAL
- APW — APWA STANDARD 308-1, MONOLITHIC CATCH BASIN CONNECTION
- PIP/XX — PROTECT IN PLACE (XX = TYPE PER PLAN). THE FOLLOWING IS THE LEGEND: CB = CATCH BASIN; SL = STREET LIGHT; PP = POWER POLE; WM = WATER METER; FH = FIRE HYDRANT; TR = TREE; RMP = PROTECT IN PLACE EXISTING HANDICAP ACCESSIBLE RAMP. CONTRACTOR TO STRAIGHT GRADE FROM BACK OF DRIVEWAY WALK TO FRONT CORNER OF EXISTING RAMP. CONTRACTOR TO VERIFY GRADE DIFFERENTIAL BETWEEN THESE POINTS DOES NOT EXCEED 3 INCHES.
- REM/XX — REMOVE EXISTING FACILITY (XX = TYPE PER PLAN). THE FOLLOWING IS THE LEGEND: MB = MAIL BOX; PP = EXISTING POLE TO BE REMOVED BY CITY CONTRACTOR; TR = TREE; CB = CATCH BASIN; DWY = DRIVEWAY
- RCP/XX — REINFORCED CONCRETE PIPE (XX = TYPE PER PLAN). THE FOLLOWING IS THE LEGEND: 15" = 15" DIAMETER REINFORCED CONCRETE PIPE; 18" = 18" DIAMETER REINFORCED CONCRETE PIPE
- C1 — CHARTER TO RELOCATE OVERHEAD FACILITIES
- C2 — CHARTER TO ABANDON OVERHEAD SERVICES
- T — CONTRACTOR SHALL COORDINATE WITH AT&T
- T1 — AT&T TO RELOCATE OVERHEAD FACILITIES
- T2 — AT&T TO ABANDON OVERHEAD SERVICES
- T3 — AT&T TO INSTALL GUY WIRE FACILITY
- T4 — AT&T TO MODIFY/RECONSTRUCT UNDERGROUND VAULT
- T5 — AT&T TO RELOCATE POLE
- MW — ABANDONED MONITORING WELL (CONCRETE FILLED). CONTRACTOR TO CUT 3' BELOW FINISHED GRADE
- RDA/1.0 — RESTRIPE PARKING LOT TO PROVIDE SINGLE ADA ACCESS STALL PER BUILDING AND SAFETY STANDARD RDA-1.0. CONTRACTOR TO ELIMINATE FIRST STALL ADJACENT TO PIERCE STREET.
- M/816 — RCFC & WCD STANDARD DRAWING M816 – CONCRETE BULKHEAD
- BUS — CONSTRUCT BUS PAD PER RTA STANDARDS
- X — CURB DATA INFORMATION, SEE SHT 2 FOR TABLE.
- 200/XX — CONSTRUCT CURB AND GUTTER. THE FOLLOWING IS THE LEGEND: I-6" = 6" CURB AND GUTTER; II = 8" MEDIAN CURB
- E — CONTRACTOR SHALL COORDINATE WITH PUD ELECTRIC
- E1 — PUD ELECTRIC TO RELOCATE OVERHEAD FACILITIES
- E2 — PUD ELECTRIC TO ABANDON OVERHEAD SERVICES
- E3 — PUD ELECTRIC TO UNDERGROUND OVERHEAD FACILITIES
- E4 — PUD ELECTRIC TO CONSTRUCT UNDERGROUND RISER TO OVERHEAD
- E5 — PUD ELECTRIC TO RELOCATE POLE
- E6 — INSTALL NEW STREET Light
- AUT/GTE — CONSTRUCT WROUGHT IRON GATES AS INDICATED ON "STATION &LAYOUT EXHIBIT" "FIRE STATION SPECIFICATIONS", AND "WROUGHT IRON GATE DETAILS" LOCATED IN special Provisions (revision 1)
- 302/M1 — CONSTRUCT MODIFIED DRIVEWAY: MODIFICATION [illegible] TRANSITION FROM CURB SIDE DRIVEWAY TO PROPERTY LINE DRIVEWAY
- 302/M2 — CONSTRUCT MODIFIED DRIVEWAY: MODIFICATION INCLUDES CONSTRUCTING AN OFFSET 'B' WIDTH. THE WESTERLY PORTION OF THE 'B' WIDTH SHALL BE 20' AND THE WESTERLY DRIVEWAY WING SHALL TRANSITION TO THE JOIN THE EXSTING DRIVEWAY AT 35' BACK FROM TOP OF CURB. (revision 1)
- RET/CRB — CONTRACTOR SHALL CONSTRUCT RETAINING CURB MONOLITHIC POUR WITH SIDEWALK, 18" MAX HEIGHT
- BOL — INSTALL STERNBERG LIGHTING MODEL #650LB 'MILFORD' LIGHTED BOLLARD OR APPROVED EQUAL
- MON — RELOCATE EXISTING MONUMENT SIGN
- SN — SUNESYS/NEXG TO RELOCATE OVERHEAD FACILITIES
- SN1 — SUNESYS/NEXG TO RELOCATE POLE
- PVC/3" — INSTALL 20 LF OF 3" SCH 40 PVC CURB OUTLET
- NDS/3" — INSTALL NDS 3" GRATE INLET TO INCLUDE 3" PVC RISER
- CNC/SWL — 18" WIDE AND 3" THICK CONCRETE GUTTER OVER 95% COMPACTED SOIL WITH 2% CROSSFALL TO FLOWLINE
- CNC/TRK — CONSTRUCT CONCRETE TRACK FOOTING PER SLIDE GATE DETAIL
- CNC/PAD — CONSTRUCT CONCRETE PAD FOR GATE OPENER PER SLIDE GATE DETAIL
- LS/EM — COORDINATE INSTALLATION OF ELECTRIC METER WITH PUD ELECTRIC
- LS/WM — COORDINATE INSTALLATION OF WATER METER WITH PUD WATER @ STATION 70+32.10.
- BLK/WLL — CONSTRUCT 6' HIGH TAN SPLIT FACE (6"X8"X16") CONCRETE BLOCK WALL PER CITY STD. DWG. NO. 724 ADJACENT TO EXISTING FIRE STATION DRIVEWAY. TOP OF FOOTING SHALL BE AT LEAST 6" BELOW FINISHED SURFACE. WALL SHALL HAVE MATCHING SPLIT FACE DECORATIVE CAP. (revision 1)
- CNC/WLK — CONTRACTOR SHALL CONSTRUCT COLORED CONCRETE CROSS-WALK PER TYPICAL SECTION FOR CONCRETE CROSS-WALK DETAIL LOCATED IN SPECIAL Provisions (revision 1)

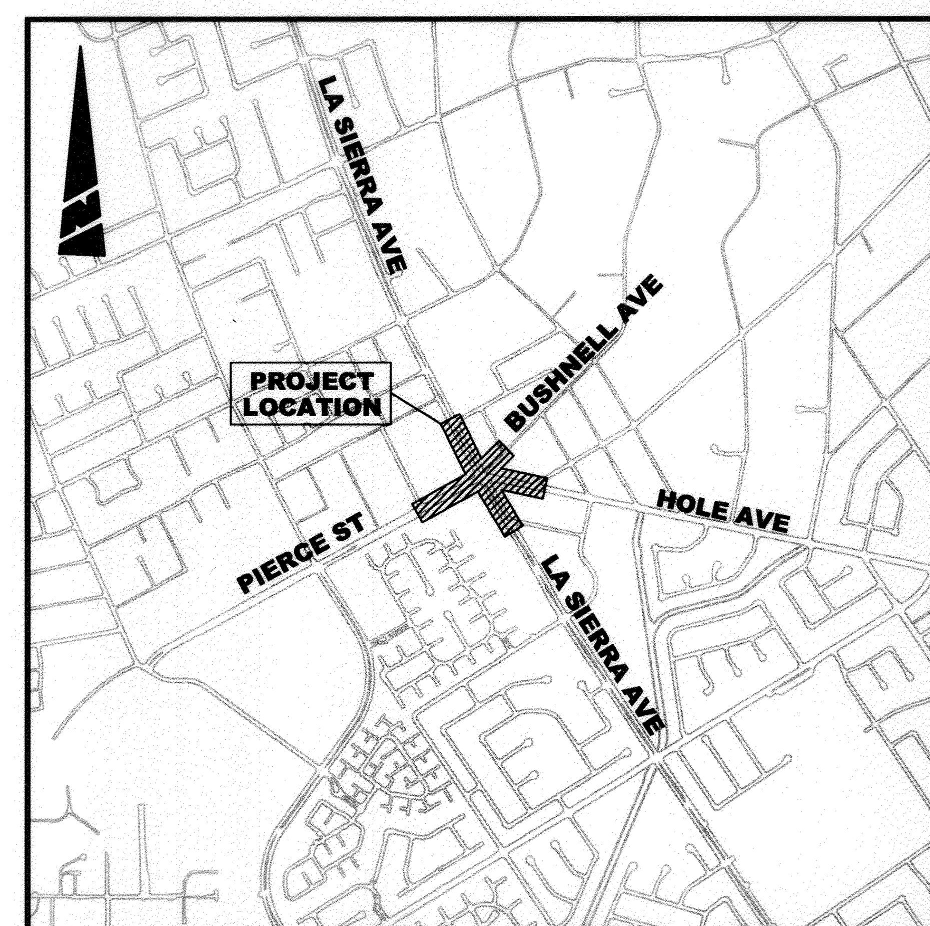

PROJECT LOCATION MAP
NTS

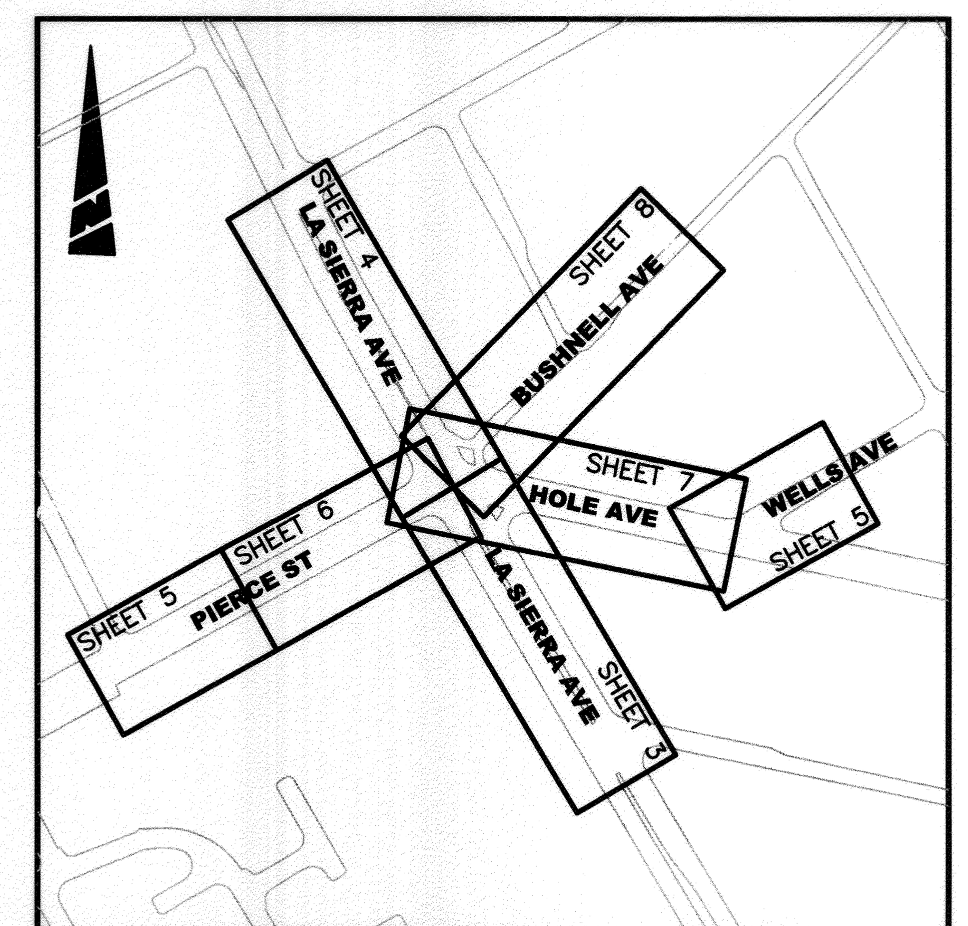

SHEET INDEX MAP
NTS

CONSTRUCTION LEGEND

- CENTER LINE
- RIGHT-OF-WAY — R/W
- SUBDIVISION LOT LINE — PL
- 18" MAX RETAINING CURB
- 6' HIGH TAN SPLIT FACE CONCRETE BLOCK WALL
- TOP OF SLOPE
- TOE OF SLOPE
- DIRECTION OF FLOW
- STRUCTURAL SECTION = S1
- STRUCTURAL SECTION = S2
- STRUCTURAL SECTION = S3
- STRUCTURAL SECTION = S4
- G2 – GRIND AND OVERLAY

EXISTING UNDERGROUND UTILITIES:

SANITARY SEWER	8"S
WATER LINE	6"W
STORM DRAIN	24"SD
GAS LINE	3"G
ABANDONDED UTILITY	6"G(ABAN'D.)
TELEPHONE CONDUIT	T
ELECTRICAL CONDUIT	E
ELECTRICAL LIGHTING CONDUIT	ELC
TRAFFIC SIGNAL	SIG
FIRE ALARM	F

EXISTING TOPOGRAPHY:

BLOCK WALL; BOARD FENCE; WIRE FENCE; CHAIN LINK FENCE; TOP OF SLOPE; TOE OF SLOPE; DIRECTION OF FLOW

SANITARY SEWER M.H.; SANITARY SEWER CLEANOUT; STORM DRAIN M.H.; IRRIGATION WEIR; WATER M.H.; GAS M.H.; ELECTRIC M.H.; TELEPHONE M.H.; WATER METER; FIRE HYDRANT; SPRINKLER HEAD; VALVE; AIR VALVE; AIR VENT; BUS STOP SIGN; BLOW-OFF VALVE; IRRIGATION STAND PIPE; CONCRETE; ASPHALT; BUILDING; EDGE OF PAVEMENT

POLE & GUY ANCHOR; POWER POLE; TELEPHONE POLE; TELEPHONE RISER; JOINT USE POLE; PULL BOX; TRAFFIC SIGN; PARKING METER; FIRE ALARM BOX; STREET NAME SIGN; GAS METER; MAIL BOX; FAUCET; WALK-DON'T WALK PEDESTRIAN SIGNAL; ELECTROLYSIS TEST STATION; WHEEL STOP; A.C. BERM

PEDESTRIAN PUSH BUTTON; TRAFFIC SIGNAL; TRAFFIC SIGNAL ON MAST ARM; TRAFFIC SIGNAL CONTROLLER; TRAFFIC SIGNAL PRESSURE DETECTOR; TRAFFIC SIGNAL LOOP DETECTOR; STREET LIGHT & TRAFFIC SIGNAL ON MAST ARM; STREET LIGHT (UPRIGHT); STREET LIGHT ON MAST ARM; STEEL POST; WOOD POST

SHEET INDEX: STREET IMPROVEMENT

SHEET NO.	DESCRIPTION
1	TITLE SHEET & NOTES
2	SECTIONS
3	LA SIERRA AVENUE(SOUTH) STREET IMPROVEMENTS
4	LA SIERRA AVENUE(NORTH) STREET IMPROVEMENTS
5	PIERCE STREET AND WELLS AVENUE STREET IMPROVEMENTS
6	PIERCE STREET IMPROVEMENTS
7	HOLE AVENUE STREET IMPROVEMENTS
8	BUSHNELL AVENUE STREET IMPROVEMENTS
9	STORM DRAIN LINES A-1, A-2, A-3, B-1, C-1 IMPROVEMENTS
10	STORM DRAIN LINES D-1, D-2, E-1, E-2 IMPROVEMENTS

SHEET INDEX: LANDSCAPE IMPROVEMENTS

DWG NO.	DESCRIPTION
R-4019L	LANDSCAPE AND IRRIGATION PLANS (SHEETS 1-10)

SHEET INDEX: TRAFFIC IMPROVEMENTS

SHEET NO.	DESCRIPTION
XL-557	SIGNING AND STRIPING PLAN – LA SIERRA, HOLE AVE AND PIERCE STREET
X-383A	HOLE AVENUE @ WELLS AVENUE
X-413A	LA SIERRA AVE AT HOLE AVENUE/PIERCE STREET

SHEET INDEX: STREET LIGHT PLAN

DWG NO.	DESCRIPTION
100024-03	STREET LIGHT PLAN (SHEETS 1-3)

SHEET INDEX: ELECTRIC UNDERGROUND

DWG NO.	DESCRIPTION
070015	ELECTRIC PLANS (SHEETS 1-5)

BENCHMARK F2-N3

P.K NAIL AND CITY ENGINEER TAG IN THE NORTHERLY CURB OF PIERCE STREET MIDWAY BETWEEN ROSE AVENUE AND HOLLYHOCK LANE.

ELEVATION: 723.297

ENGINEER IN RESPONSIBLE CHARGE
Edward Lara
EDWARD LARA
R.C.E. No. 63753 expires 9/30/10
DATE July 26, 2010

REGISTERED PROFESSIONAL ENGINEER — EDWARD LARA — No. 63753 Exp. 9-30-10 — CIVIL — STATE OF CALIFORNIA

MARK	REVISIONS	APPR.	DATE
2	CLARIFY STRUCTURAL SECTIONS	E.L	4/22/11
1	Revised Const. Notes per Addendum No. 2	EL	9/19/10

DESIGNED BY LA DRAWN BY LA CHECKED BY EL

APPROVED BY	BY	DATE
PRINCIPAL ENGINEER	PH	7/28/10
CONSTRUCTION ADMIN.		
SURVEYOR	CS	7/27/10
STREET SERVICES	[illegible]	7.29.10
TRAFFIC ENGINEER	S.H.	7.27.10
Landscape	JB	7.28.10

CITY OF RIVERSIDE, CALIFORNIA
PUBLIC WORKS DEPARTMENT
APPROVED BY [signature]
CITY ENGINEER
DATE 7/28/10

STREET IMPROVEMENTS AT FIVE-POINT
COVER SHEET
HORIZ. SCALE: N/A VERT. SCALE: N/A

DESIGN WORK ORDER. NO. 0704839
CONSTR. WORK ORDER. NO. 1101889

R-4019
SHEET 1 OF 10
FILE NO.

AS-BUILT 6-12-14 DC

INDEXED 6-12-14

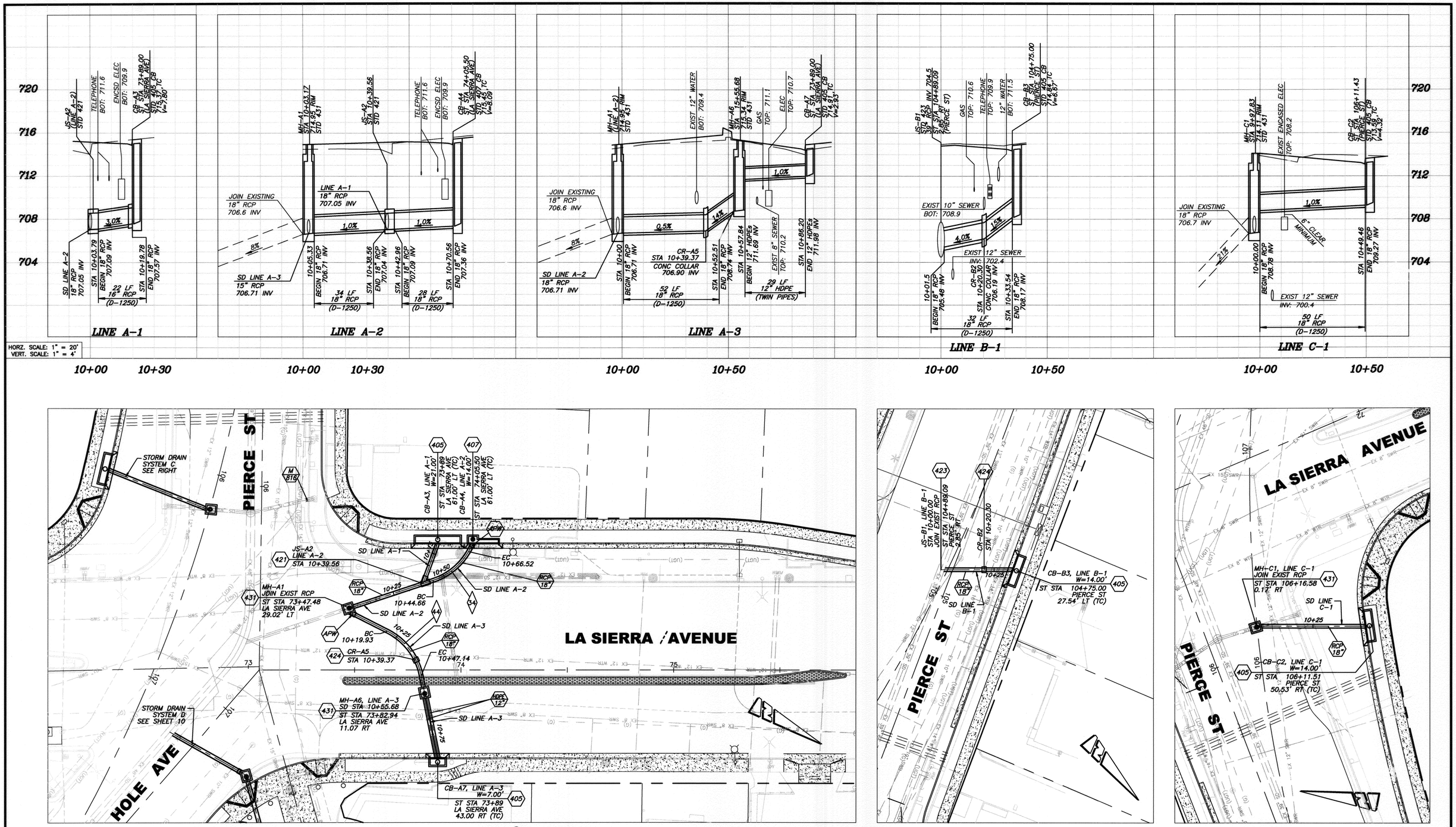

NOTE: MINIMUM OF 1' CLEARANCE SHALL BE PROVIDED BETWEEN ANY EXISTING WATER LINE AND PROPOSED STORM DRAIN LINE

NOTE: ALL UTILITIES SHALL BE LOCATED PRIOR TO CONSTURCTION OF ANY STORM FACILITIES. POTHOLED ELEVATIONS SHALL BE PROVIDED TO THE ENGINEER AND THE ENGINEER MAY PROVIDE A MODIFIED PLAN, IF NECESSARY.

20 0 20 40 60
GRAPHIC SCALE

BENCHMARK F2-N3

P.K NAIL AND CITY ENGINEER TAG IN THE NORTHERLY CURB OF PIERCE STREET MIDWAY BETWEEN ROSE AVENUE AND HOLLYHOCK LANE.

ELEVATION: 723.297

RIVERSIDE

ENGINEER IN RESPONSIBLE CHARGE

Edward Lara

EDWARD LARA
R.C.E. No. 63753 expires 9/30/12
DATE NOVEMBER 10, 2010

REGISTERED PROFESSIONAL ENGINEER EDWARD LARA No. 63753 Exp. 9-30-12 CIVIL STATE OF CALIFORNIA

MARK	REVISIONS	APPR.	DATE
2	REVISED SD + CREATED SHEET 9A OF 10	E.L.	8/10/10
1	ADDED NOTE PER MINIMUM NO. 1	E.L.	8/12/10

DESIGNED BY LA DRAWN BY LA CHECKED BY E.L.

APPROVED BY	BY	DATE
PRINCIPAL ENGINEER		
CONSTRUCTION ADMIN.		
SURVEYOR		
STREET SERVICES		
TRAFFIC ENGINEER		

CITY OF RIVERSIDE, CALIFORNIA
PUBLIC WORKS DEPARTMENT

APPROVED BY
APPROVED PER ORIGINAL SHEET 9 OF 10
CITY ENGINEER

DATE

STREET IMPROVEMENTS AT FIVE-POINT

STORM DRAIN SYSTEM A
STORM DRAIN SYSTEM B
STORM DRAIN SYSTEM C

HORIZ. SCALE: VERT. SCALE:

DESIGN WORK ORDER. NO. 0704839
CONSTR. WORK ORDER. NO. 1101889

R-4019

SHEET 9A OF 10

FILE NO.

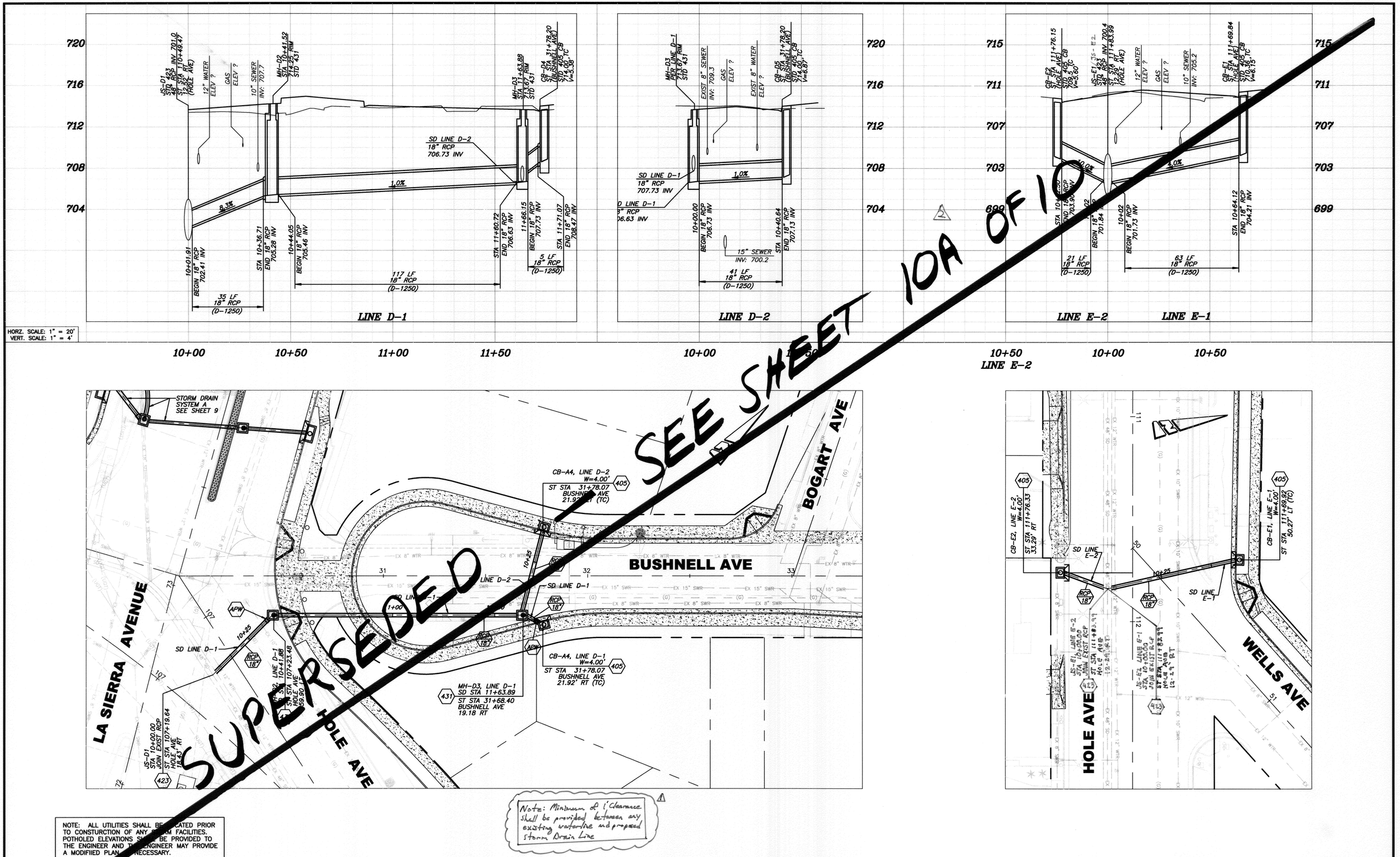

Note: Minimum of 1' Clearance shall be provided between any existing waterline and proposed Storm Drain Line

NOTE: ALL UTILITIES SHALL BE LOCATED PRIOR TO CONSTURCTION OF ANY STORM FACILITIES. POTHOLED ELEVATIONS SHALL BE PROVIDED TO THE ENGINEER AND THE ENGINEER MAY PROVIDE A MODIFIIED PLAN IF NECESSARY.

20 0 20 40 60
GRAPHIC SCALE

BENCHMARK F2-N3

P.K NAIL AND CITY ENGINEER TAG IN THE NORTHERLY CURB OF PIERCE STREET MIDWAY BETWEEN ROSE AVENUE AND HOLLYHOCK LANE.

ELEVATION: 723.297

CITY OF RIVERSIDE

ENGINEER IN RESPONSIBLE CHARGE

Edward Lara

EDWARD LARA
R.C.E. No. 63753 expires 9/30/10
DATE July 26, 2010

REGISTERED PROFESSIONAL ENGINEER
EDWARD LARA
No. 63753
Exp. 9-30-10
CIVIL
STATE OF CALIFORNIA

MARK	REVISIONS	APPR.	DATE
3	REVISED SD + REPLACED w/ SHT 10A	E.L.	11/9/10
1	Added Note per Addendum No. 2	E.L.	8/19/10

DESIGNED BY LA DRAWN BY LA CHECKED BY EL

APPROVED BY	BY	DATE
PRINCIPAL ENGINEER	PH	7/28/10
CONSTRUCTION ADMIN.		
SURVEYOR	CS	7/27/10
STREET SERVICES	[illegible]	7.27.10
TRAFFIC ENGINEER	[illegible]	7.27.10
Landscape	[illegible]	7-28-10

CITY OF RIVERSIDE, CALIFORNIA
PUBLIC WORKS DEPARTMENT

APPROVED BY [signature]
CITY ENGINEER
DATE 7/28/10

STREET IMPROVEMENTS AT FIVE-POINT

STORM DRAIN SYSTEM D
STORM DRAIN SYSTEM E

HORIZ. SCALE: VERT. SCALE:

DESIGN WORK ORDER. NO. 0704839
CONSTR. WORK ORDER. NO. 1101889

R-4019

SHEET 10 OF 10

FILE NO.

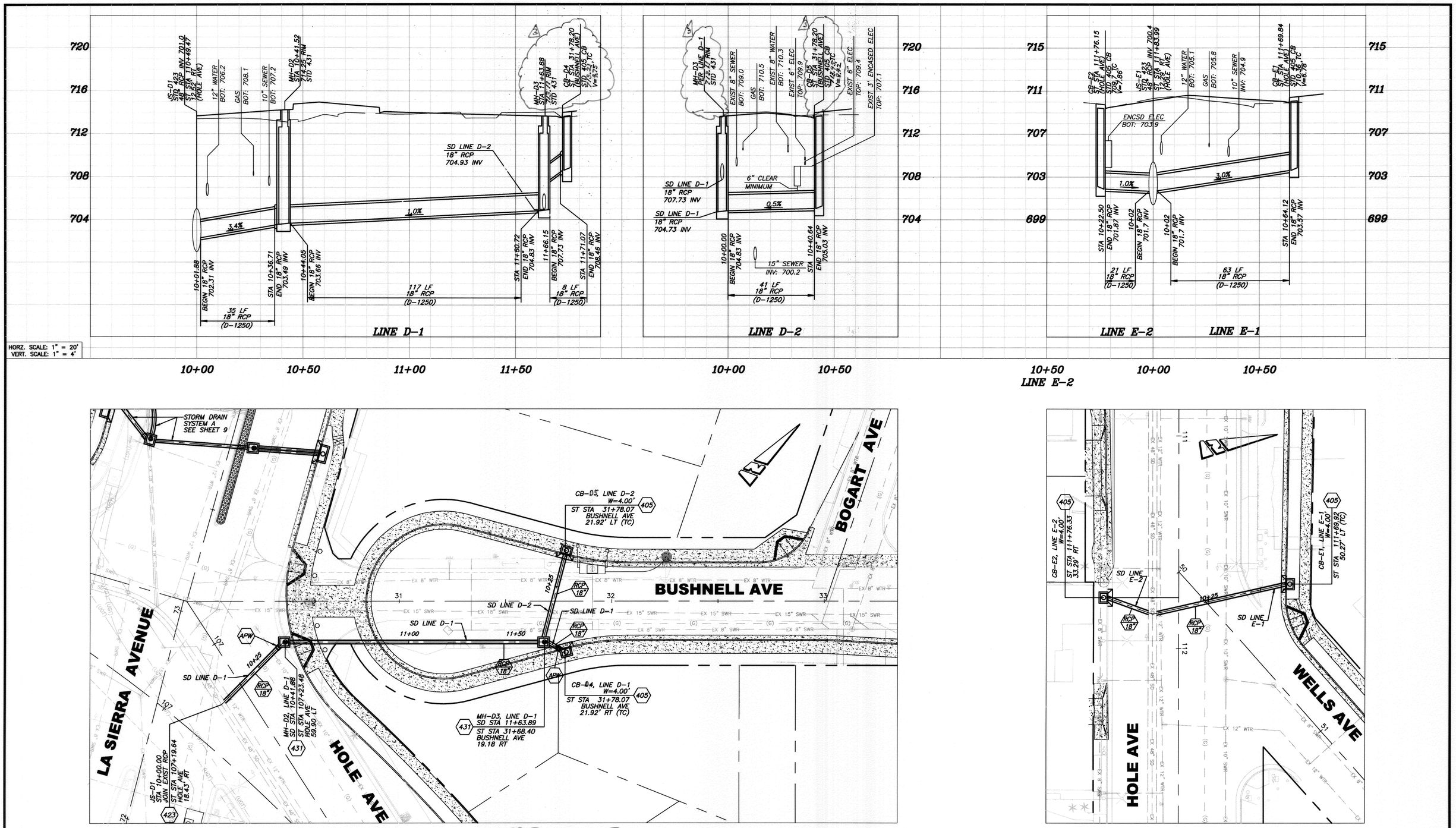

NOTE: MINIMUM OF 1' CLEARANCE SHALL BE PROVIDED BETWEEN ANY EXISTING WATER LINE AND PROPOSED STORM DRAIN LINE

NOTE: ALL UTILITIES SHALL BE LOCATED PRIOR TO CONSTURCTION OF ANY STORM FACILITIES. POTHOLED ELEVATIONS SHALL BE PROVIDED TO THE ENGINEER AND THE ENGINEER MAY PROVIDE A MODIFIED PLAN, IF NECESSARY.

20 0 20 40 60
GRAPHIC SCALE

BENCHMARK F2-N3

P.K NAIL AND CITY ENGINEER TAG IN THE NORTHERLY CURB OF PIERCE STREET MIDWAY BETWEEN ROSE AVENUE AND HOLLYHOCK LANE.

ELEVATION: 723.297

RIVERSIDE

ENGINEER IN RESPONSIBLE CHARGE

Edward Lara

EDWARD LARA
R.C.E. No. 63753 expires 9/30/12
DATE November 9, 2010

REGISTERED PROFESSIONAL ENGINEER
EDWARD LARA
No. 63753
Exp. 9-30-12
CIVIL
STATE OF CALIFORNIA

MARK	REVISIONS	APPR.	DATE
3	REVISED SURFACE & TC ELEVATIONS	E.L.	11/1/10
2	REVISED SD & CREATED SHEET RAISED	E.L.	11/1/10
1	ADDED NOTE PER ADDENDUM NO. 2.	E.L.	8/19/10

DESIGNED BY LA DRAWN BY LA CHECKED BY EL

APPROVED BY	BY	DATE
PRINCIPAL ENGINEER		
CONSTRUCTION ADMIN.		
SURVEYOR		
STREET SERVICES		
TRAFFIC ENGINEER		

CITY OF RIVERSIDE, CALIFORNIA
PUBLIC WORKS DEPARTMENT

APPROVED BY
APPROVED PER ORIGINAL SHEET 10 8/10
CITY ENGINEER

DATE

STREET IMPROVEMENTS AT FIVE-POINT

STORM DRAIN SYSTEM D
STORM DRAIN SYSTEM E

HORIZ. SCALE: VERT. SCALE:

DESIGN WORK ORDER. NO. 0704839
CONSTR. WORK ORDER. NO. 1101889

R-4019

SHEET 10A OF 10

FILE NO.

FIVE POINTS INTERSECTION LANDSCAPE IMPROVEMENTS

GENERAL NOTES

IRRIGATION SYSTEM DESIGN CRITERIA FOR CAPITAL PROJECTS:

WATER SERVICE: CONTRACTOR SHALL CONTACT THE CITY OF RIVERSIDE, PUBLIC UTILITIES, WATER DEPARTMENT OR WESTERN MUNICIPAL WATER DISTRICT AND OBTAIN AND PAY FOR NEW WATER METER(S) AS NECESSARY TO ADEQUATELY SERVE THE IRRIGATION SYSTEM AS DESIGNED. METER AND BACKFLOW DEVICES SHALL BE LOCATED IN THE PARKWAY (WITHIN PUBLIC RIGHT-OF-WAY) A MINIMUM OF 100' FROM ANY INTERSECTION OR MAJOR DRIVEWAY (CURB RETURN TYPE DRIVEWAY OPENING). CONTRACTOR SHALL BE RESPONSIBLE FOR ALL WATER COSTS THROUGHOUT THE MAINTENANCE AND PLANT ESTABLISHMENT PERIOD IF APPLICABLE.

ELECTRIC SERVICE: CONTRACTOR SHALL CONTACT THE CITY OF RIVERSIDE, PUBLIC UTILITIES, ELECTRICAL DIVISION TO OBTAIN AND PAY FOR A NEW 'NON-METERED' ELECTRICAL SERVICE AS NECESSARY TO SERVE EACH NEW IRRIGATION CONTROLLER(S). SERVICE SHALL BE UNDERGROUND TYPE. COORDINATE LOCATION AND OBTAIN APPROVAL FROM THE CITY'S INSPECTOR.

IRRIGATION CONTROLLER: THE IRRIGATION CONTROLLER(S) (ONE REQUIRED AT EACH POINT OF CONNECTION, I.E. P.O.C.), EACH SHALL BE SIZED TO ACCOMMODATE THE NUMBER OF VALVES REQUIRED TO SERVE THE ENTIRE PROJECT AND TO PROVIDE A MINIMUM OF TWO SPARE STATIONS. THE CONTROLLER AND ENCLOSURE SHALL BE THE TYPE AND MANUFACTURER AS INDICATED ON THE PLANS AND/OR IRRIGATION LEGEND. CONTROLLER SHALL BE WEATHERPROOF, PER CITY SPECS, INSTALLED WITHIN A LOCKING STAINLESS STEEL METAL ENCLOSURE TO SUPPORT CONTROLLER MANUFACTURER REQUIREMENTS, AS WELL AS CITY REQUIREMENTS, AND SHALL BE LOCATED A MINIMUM OF 100' FROM ANY INTERSECTION OR MAJOR DRIVEWAY (CURB RETURN DRIVEWAY OPENING). A CONCRETE PAD THE SAME WIDTH AND THICKNESS, AS THE CONTROLLER PAD SHALL BE INSTALLED BETWEEN THE CONTROLLER AND THE BACK OF SIDEWALK.

ENRNJGW: SLEEVES SHALL BE INSTALLED IN STRAIGHT LINES (NO TURNS OR BENDS, EITHER VERTICAL OR HORIZONTAL).

- ** ALL LINES BENEATH STREET AREAS (I.E. NOT WITHIN THE LANDSCAPE PLANTING AREAS) SHALL BE CONSTANT PRESSURE LINES INSTALLED IN SLEEVES WITH TRACER TAPE (TYPE OF SLEEVE INDICATED ON TAPE) INSTALLED SIX INCHES ABOVE EACH SLEEVE.
  - *** MAIN LINE SLEEVES UNDER STREET AREAS SHALL BE CLASS 315 PVC OR SCH. 40
  - *** CONTROLLER WIRES INSTALLED WITHIN STREETS SHALL BE SLEEVED IN GRAY PVC SCH. 40 CONDUIT, WITH 12" MINIMUM SEPARATION FROM THE MAINLINE WATER SLEEVE.
- ** MAIN LINE, LATERAL LINES AND CONTROL WIRES INSTALLED BENEATH HARDSCAPE WITHIN THE LANDSCAPE AREA EXTENDING FOR FIVE FEET OR MORE MUST BE SLEEVED. THE SLEEVE SHALL EXTEND TWELVE INCHES BEYOND EDGE OF HARDSCAPE.
  - *** MAIN LINE AND LATERAL LINES SHALL BE SLEEVED IN SCH. 40 PVC.
  - *** CONTROLLER WIRES SHALL BE INSTALLED GRAY SCH. 40 PVC CONDUIT.

CONTROL WIRE: ALL CONTROL WIRE LOCATED UNDER PAVEMENT OF ANY TYPE SHALL BE SEPARATELY SLEEVED FROM MAIN LINE AND LATERALS. PROVIDE A MINIMUM OF TWO SPARE CONTROL WIRES AT EACH TERMINATING END OF THE MAINLINE, STUBBED OUT IN A VALVE BOX WITH THE LID MARKED "SW". STATION CONTROL WIRE SHALL BE 14 GAUGE, COMMON WIRE 12 GAUGE AND SPARE WIRES 14 GAUGE. SPARE WIRE SHALL BE A DIFFERENT COLOR FROM STATION AND COMMON WIRES.

MAINLINE: SIZE ALL MAINLINES AS NECESSARY TO KEEP WATER VELOCITY BELOW 5 FEET PER SECOND. PRESSURE SUPPLY LINES 2 INCHES IN DIAMETER AND UP TO 8 INCHES IN DIAMETER SHALL BE EITHER CLASS 315 SOLVENT WELD PVC OR GASKET TYPE PVC. SOLVENT WELD AND RING TYPE PIPE SHALL NOT BE USED TOGETHER ON THE SAME PRESSURE SUPPLY LINE. PRESSURE SUPPLY LINES 1½" IN DIAMETER AND SMALLER SHALL BE SCH. 40 PVC. PROVIDE A LINE SIZE GATE VALVE WITHIN A VALVE BOX IMMEDIATELY UPSTREAM OF LINE ENTERING A SLEEVE PASSING UNDER THE STREET AREA. THRUST BLOCKS SHALL BE INSTALLED PER PIPE MANUFACTURER REQUIREMENTS OR AS DIRECTED BY CITY INSPECTOR.

LATERAL LINES: SIZE ALL LATERAL LINES AS NECESSARY TO KEEP WATER VELOCITY BELOW 5 FEET PER SECOND. DESIGN LATERAL LINE PLACEMENTS AT EDGES OF PLANTING SPACES TO AVOID CONFLICT WITH PLANTINGS, THE PIPE SHALL BE SCH. 40 PVC. ALL MAIN LINE AND LATERAL LINES RUNNING PARALLEL TO THE LINES SHALL HAVE A MINIMUM HORIZONTAL SEPARATION OF 12 INCHES.

CONTROL VALVES: ALL IRRIGATION CONTROL VALVES SHALL BE BRASS, PRESSURE REGULATION (MASTER VALVE NON-PRESSURE REGULATING), SIZED TO PROVIDE THE WATER VOLUME REQUIRED WITH PRESSURE LOSS THROUGH THE VALVE KEPT AT BELOW A MAXIMUM OF 10% OF THE AVAILABLE STATIC PRESSURE. INSTALL VALVES IN "INLINE" CONFIGURATION. ALL STATIONS SHALL BE SIZED TO AVOID 100 GPM DEMAND OR 50 HEADS PER STATION, WHICHEVER IS GREATER.

VALVE BOXES: ALL VALVE BOXES SHALL BE CONCRETE BODY, WITH CAST IRON, HINGED, LOCKING LIDS. LIDS SHALL BE MARKED BY MANUFACTURER OF LIDS (WELDED INTO TOP OF LID) WITH NUMBERS FOR STATION IDENTIFICATION, "GV" FOR GATE VALVE, "QC" FOR QUICK, COUPLER, "MV" FOR MASTER VALVE, "FM" FOR FLOW METER, "SW" FOR SPARE WIRE, "SB" FOR WIRE SPLICE BOX AND "FI" FOR FERTILIZER INJECTOR.

QUICK COUPLERS: PROVIDE QUICK COUPLER VALVES AT A MINIMUM OF 50' FROM THE END OF THE LANDSCAPED AREA IN EACH ISLAND/PARKWAYS AND SPACED AT A MAXIMUM OF 100' O.C. IN SHRUB AND TURF AREAS.

BUBBLERS: ALL BUBBLERS SHALL BE OF THE TYPE AND MANUFACTURER INDICATED ON THE PLANS AND SHALL BE INSTALLED WITH TRIPLE SWING JOINTS IN A 3" PVC PERFORATED DRAIN PIPE, WITH A 3" PVC CAP FILLED WITH CRUSHED 1" ROCK AS DETAILED. TWO BUBBLERS SHALL BE INSTALLED AT EACH TREE, WITH 48" MINIMUM SPACING BETWEEN EACH BUBBLER. TREES SHALL BE PLANTED 50' MINIMUM FROM EACH NOSE, THEN SPACED 45' MINIMUM BETWEEN EACH TREE.

MISCELLANEOUS: THE RAIN BUCKET AND THE ET GAUGE SHALL BE INSTALLED PER MANUFACTURER REQUIREMENTS.

CURB MARKING: STENCIL VALVE BOX MARKINGS TO CURB TOP ALONG RIGHT-OF-WAY WITH A COMMERCIAL QUALITY ALKYD MARKING PAINT (EQUAL TO SHERWIN-WILLIAMS SETFAST PREMIUM ALKYD ZONE MARKING PAINT, A303 YELLOW, A305 BLACK – (800) 524-5979. PAINT BLACK 3" MARKINGS ATOP A YELLOW BACKGROUND, WHICH EXTENDS A MINIMUM 1" BEYOND STENCILED MARKINGS.

RECORD PRINTS: INITIALLY SHALL BE MARKED UP BLUE LINE PRINTS, ALL DIMENSIONS NOTED ON A COMPACT DISC (CD) WITH ALL GLOBAL POSITIONING SYSTEM (GPS) COORDINATES FOR EACH REQUIRED ITEM, AND ALL INFORMATION IS TO BE TRANSFERRED TO EITHER SEPIA MYLAR OR PHOTO MYLAR PRINTS PRIOR TO TURN-OVER TO THE CITY AT FINAL ACCEPTANCE OF THE PROJECT.

PUBLIC LANDSCAPING:

1. ALL RELATED WORK SHALL CONFORM TO THE CITY OF RIVERSIDE PUBLIC WORKS DEPARTMENT STANDARDS AND SPECIFICATIONS FOR PLANTING AND IRRIGATION WORK (LANDSCAPE).
2. BOTH A PUBLIC LANDSCAPE PERMIT, AS ISSUED BY PUBLIC WORKS, AND A PUBLIC WORKS CONSTRUCTION PERMIT AS ISSUED BY PUBLIC WORKS, ARE REQUIRED PRIOR TO COMMENCEMENT OF ANY CONSTRUCTION ACTIVITY FOR LANDSCAPE IMPROVEMENTS IN THE RIGHT OF WAY. THE PUBLIC LANDSCAPE PERMIT MAY BE OBTAINED BY CONTACTING THE PUBLIC WORKS DEPARTMENT, AT (951) 826-5341. THE PUBLIC WORKS CONSTRUCTION PERMIT MAY BE OBTAINED AT THE PUBLIC WORKS COUNTER, 4TH FLOOR, CITY HALL, 3900 MAIN STREET, RIVERSIDE, 92522.
3. WHEN CALLING FOR INSPECTIONS CONTACT THE PUBLIC WORKS LANDSCAPE INSPECTOR at (951) 351-6313 A MINIMUM OF 48 HOURS IN ADVANCE TO SCHEDULE AN INSPECTION. A WRITTEN APPROVAL WILL BE PROVIDED ON THE PUBLIC LANDSCAPE PERMIT CARD FOR EACH STAGE OF INSPECTION. A VERBAL APPROVAL WILL NOT BE ACCEPTABLE. INSPECTIONS ARE REQUIRED PER THE STANDARD SPECIFICATIONS, AND INCLUDE, BUT ARE NOT NECESSARILY LIMITED TO THE FOLLOWING:
   - 3.1. AFTER COMPLETION OF FINAL GRADING AND WHEN ALL UTILITY SERVICES HAVE BEEN MARKED, BUT PRIOR TO INITIATING ANY LANDSCAPE WORK WITHIN THE PUBLIC RIGHT-OF-WAY;
   - 3.2. AT TIME OF INSTALLATION OF IRRIGATION SLEEVES AND CONSTANT PRESSURE MAINLINES, BUT PRIOR TO BACKFILL OF TRENCHES FOR SAME (NOTE: MAINLINES MUST BE PRESSURE TESTED IN THE PRESENCE OF THE PUBLIC WORKS LANDSCAPE INSPECTOR);
   - 3.3. AT TIME OF INSTALLATION OF IRRIGATION VALVES, LATERALS AND HEADS;
   - 3.4. FOR SPOTTING OF ALL TREES PRIOR TO DIGGING PLANTING PITS;
   - 3.5. WHILE DIGGING PLANT PITS AND PLANTING/RELOCATING TREES;
   - 3.6. AFTER PLANTING AND ALL OTHER INDICATED WORK HAS BEEN COMPLETED, FOR START OF MAINTENANCE;
   - 3.7. AT SUBSTANTIAL COMPLETION OF THE PROJECT FOR CITY'S ACCEPTANCE TO START THE MAINTENANCE PERIOD;
   - 3.8. AT THE END OF THE MAINTENANCE PERIOD, THE CONTRACTOR/DEVELOPER SHALL CALL THE PUBLIC WORKS LANDSCAPE INSPECTOR AT THE NUMBER LISTED ABOVE FOR A FINAL ACCEPTANCE INSPECTION IN ORDER TO BE RELEASED FROM MAINTENANCE. CONTRACTOR'S BOND WILL NOT BE RELEASED UNTIL AFTER THE CITY'S ISSUANCE OF WRITTEN NOTIFICATIONS THAT THE PROJECT HAS PASSED FINAL INSPECTION AND THE PUBLIC WORKS DEPARTMENT IS ASSUMING MAINTENANCE RESPONSIBILITIES.
4. THE DEVELOPER SHALL BE RESPONSIBLE TO ACCEPTABLY MAINTAIN ALL PLANTINGS FOR A MINIMUM PERIOD AS SPECIFIED IN THE BID DOCUMENTS.

*** NOTE:** IN THE INTEREST OF PUBLIC SAFETY AND MAINTENANCE THE PUBLIC WORKS LANDSCAPE INSPECTOR SHALL HAVE THE AUTHORITY TO REVISE THE TREE QUANTITIES AND LOCATIONS SHOWN ON APPROVED PLANS BASED UPON FIELD CONDITIONS FOUND AT THE TIME OF INSTALLATION OF THE TREES.

TYPICAL ROADWAY/MEDIAN SECTION

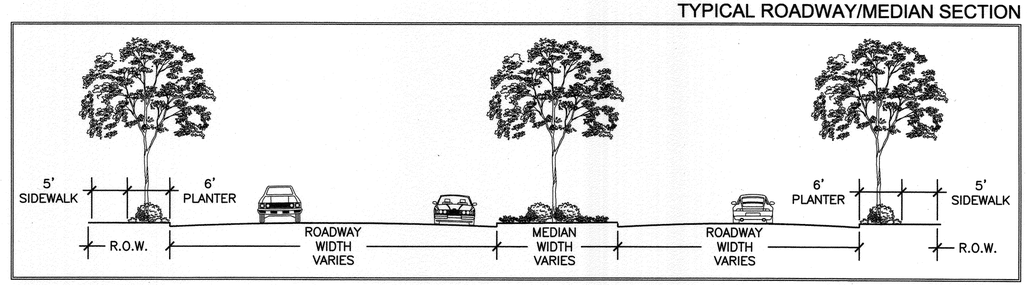

SCALE: 1'=10'-0"

SITE PLAN

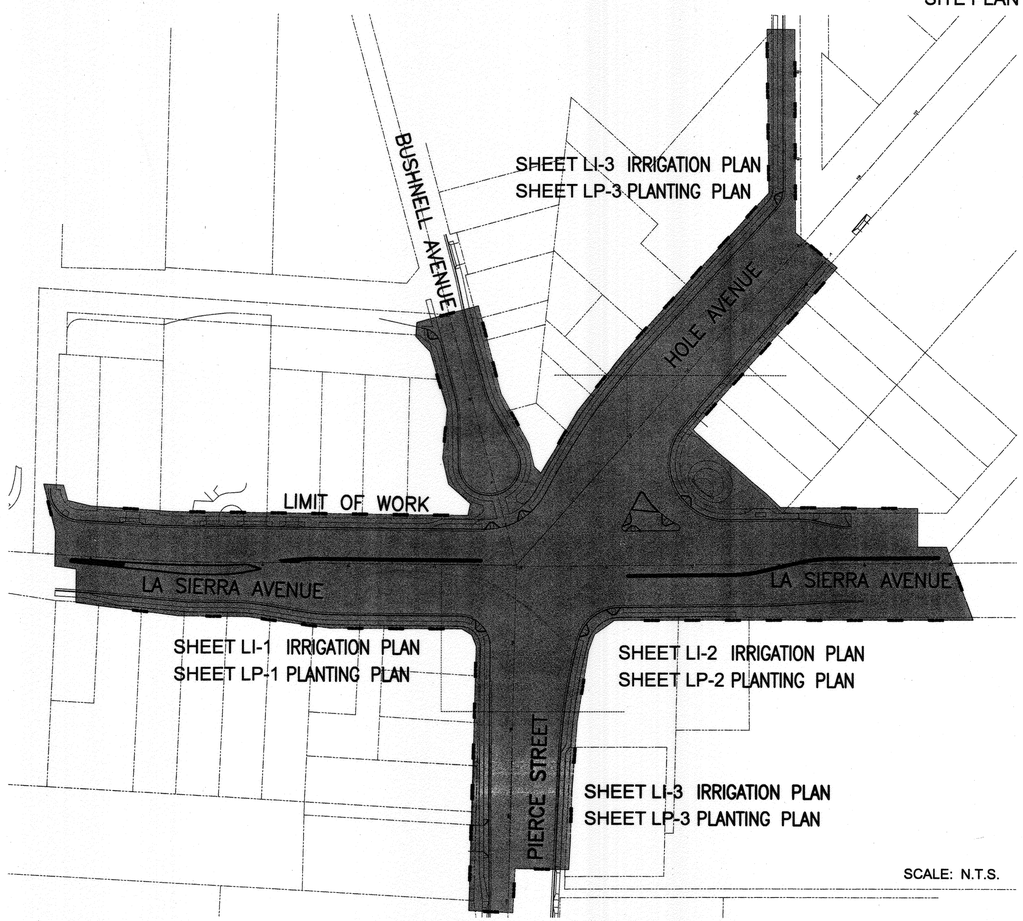

SCALE: N.T.S.

COMMUNITY WORKS DESIGN GROUP

4649 Brockton Avenue
Riverside, CA 92506
Phone: (951) 369-0700
Fax: (951) 369-4039
www.comworksdg.com

LANDSCAPE ARCHITECTURE

Contact: Tim Maloney

SHEET INDEX:

T-1	TITLE SHEET		
LI-1	IRRIGATION PLAN	LP-1	PLANTING PLAN
LI-2	IRRIGATION PLAN	LP-2	PLANTING PLAN
LI-3	IRRIGATION PLAN	LP-3	PLANTING PLAN
LI-4	IRRIGATION DETAILS	LP-4	PLANTING DETAILS
LI-5	IRRIGATION DETAILS		

LANDSCAPE QUANTITIES:

- TOTAL LANDSCAPE/HARDSCAPE AREA = 27,225 SQ. FT.
- TOTAL GROUNDCOVER AREA = 22,200 SQ. FT.
- TOTAL DECORATIVE PAVEMENT = 3,470 SQ. FT.
- TOTAL AREA MAINTAINED BY CITY = 27,225 SQ. FT.

NORTH

REGISTERED LANDSCAPE ARCHITECT — TIMOTHY L. MALONEY — Signature — 10/31/11 Renewal Date — 7/20/10 Date — STATE OF CALIFORNIA

COMMUNITY WORKS DESIGN GROUP
4649 Brockton Avenue
Riverside, CA 92501
(951) 369-0700
Fax: (951) 369-4039
www.comworksdg.com

BENCHMARK G3-F2

P.K NAIL AND CITY ENGINEER TAG IN THE NORTHERLY CURB OF PIERCE STREET MIDWAY BETWEEN ROSE AVENUE AND HOLLYHOCK LANE.

ELEVATION: 723.297

RIVERSIDE — *ENGINEER IN RESPONSIBLE CHARGE*

EDWARD LARA
R.C.E. No. 63753 expires 9/30/10
DATE July 26, 2010

REGISTERED PROFESSIONAL ENGINEER — EDWARD LARA — No. 63753 — Exp. 9-30-10 — CIVIL — STATE OF CALIFORNIA

MARK	REVISIONS	APPR.	DATE

DESIGNED BY TIM DRAWN BY KCK CHECKED BY TIM

APPROVED BY	BY	DATE
PRINCIPAL ENGINEER		7/28/10
CONSTRUCTION ADMIN.		
SURVEYOR		
STREET SERVICES		7-28-10
TRAFFIC ENGINEER		7-27-10
Landscape		7-28-10

CITY OF RIVERSIDE, CALIFORNIA
PUBLIC WORKS DEPARTMENT

APPROVED BY

~~CONSTRUCTION ADMINISTRATION~~ CITY ENGINEER — DATE 7/28/10

STREET IMPROVEMENTS AT FIVE-POINT

LANDSCAPE PLANS
T-1 TITLE SHEET

HORIZ. SCALE: AS NOTED

DESIGN WORK ORDER. NO. 0704839
CONSTR. WORK ORDER. NO. 1101889

R-4019L

SHEET 1 OF 10

JOB NUMBER: 100513

IRRIGATION PLANS ARE DIAGRAMMATIC IN NATURE. IRRIGATION MAINLINE AND ALL VALVES TO BE LOCATED IN CITY RIGHT OF WAY PLANTER AREAS. WHERE POSSIBLE. NO IRRIGATION EQUIPMENT IS TO BE INSTALLED IN STREETS, DRIVE AISLES OR BUILDINGS. ADJUST IRRIGATION IN THE FIELD TO AVOID OBSTRUCTIONS.

EQUIPMENT LEGEND

SYMBOL	MANUFACTURER/MODEL #	SIZE	DETAIL	NOTES
M	IRRIGATION WATER METER	2"	N/A	–
C	CALSENSE ET-2000e-36-LR-RRe-LR-DOME-RRantenna-TP1-TP110 CONTROLLER LOCATED IN A MYERS MEUG 22X-ENC-RVSS VANDAL RESISTANT ENCLOSURE	36 STA.	PER SPECS	–
	FEBCO 825YA REDUCED PRESSURE BACKFLOW PREVENTER LOCATED IN A STRONG BOX SBBC-45SS-RW-LOW PROFILE VANDAL RESISTENT ENCLOSURE. ENCLOSURE AND BFP TO BE POWDERCOATED GREEN	2"	PER SPECS	–
	INSTALL WILKINS 500HLR PRESSURE REGULATOR. SET AT 55 PSI.	2"	–	(1,2)
	IRRITROL 100-2 NORMALLY OPEN MASTER VALVE	2"	PER SPECS 'A', LI-4	(1,2)
	CALSENSE FM-1B FLOW SENSOR	1"	PER SPECS 'B', LI-4	(1,2)
	NIBCO T-113-K BRONZE GATE VALVE	2"	PER SPECS	(1,2)
	RAINBIRD 44NP QUICK COUPLING VALVE	1"	PER SPECS	(1,2)
	TORO DZK-TVP-1-MF DRIP CONTROL ZONE ASSEMBLY	1"	PER SPECS	(1,2)
	TORO P-22-S+EFF-KIT-60HZ REMOTE CONTROL VALVE	1"	PER SPECS	(1,2)
	TORO YD-500-34 AIR/VACUUM RELIEF VALVE (LOCATE AT HIGHEST POINT)	3/4"	PER SPECS	(1,2)
	TORO FCH-H FLUSH VALVE	3/4"	PER SPECS	(1,2)
	CLS 315 NON-POTABLE PURPLE PVC IRRIGATION MAINLINE (DIAGRAMMATIC LOCATION) -24" MIN. COVER	2"	PER SPECS	(1,2)
	SCHEDULE 40 NON-POTABLE PURPLE PVC NON-PRESSURE LATERAL LINE - 12" MIN. COVER	PLAN SIZE	PER SPECS	(1,2)
	TORO RGP-212-E DRIPLINE AT 12" O.C.	5/8"	'A'-'D', LI-5	(2)
========	SCH 40 PVC IRRIGATION PIPE / WIRE SLEEVE - 24" MIN. COVER	SEE CHART	'C', LI-4	–
NOT SHOWN	UF RATED CONTROL WIRE, 12 GA COMMON, 14 GA PILOT	12/14 GA	'D', LI-4	–
S[1]	SPARE WIRES PULLED	–	'E', LI-4	(1)
	SOLVENT WELD LINE SIZE PVC CAP WITH 1.5 CU. FT. CONCRETE THRUST BLOCK	N/A	N/A	(1,2)
P	CONTROL WIRE PULL BOX	–	'F', LI-4	(1)
	RAINBIRD RWS-C-B-1402 ROOT WATERING SYSTEM	0.50 GPM	'G', LI-4	–

(1) PIPING AND VALVES ARE SHOWN IN HARDSCAPE FOR CLARITY ONLY. IRRIGATION PLANS ARE DIAGRAMATIC.
(2) ALL IRRIGATION EQUIPMENT AND PIPING TO BE EQUIPPED WITH NON-POTABLE WATER COMPONENTS.

NEW LIGHTED BOLLARD OR TREE LIGHTING (TYPE PER PLAN)

STATION # / CONTROLLER	
FLOW (GPM)	VALVE SIZE

DRIPLINE FORMULAS PER DESIGN GUIDES

TOTAL LENGTH OF DRIPLINE = AREA x 12 / O.C. LINE SPACING

TOTAL NUMBER OF EMITTERS = LENGTH OF DRIPLINE x 12 / EMITTER SPACING

TOTAL GPM = NUMBER OF EMITTERS x GPH / 60

PIPE SIZING CHART

	3/4" PIPE
I	1" PIPE
II	1 1/4" PIPE
III	1 1/2" PIPE
IV	2" PIPE
V	2 1/2" PIPE
VI	3" PIPE
VII	4" PIPE
VIII	6" PIPE
IX	8" PIPE

SCH 40 PVC SLEEVING CHART

1 1/4" SLEEVE	1-4 WIRES	1/2" PIPE
1 1/2" SLEEVE	5-10 WIRES	3/4" PIPE
2" SLEEVE	11-20 WIRES	1" PIPE
2 1/2" SLEEVE	21-30 WIRES	1 1/4" PIPE
3" SLEEVE	31-40 WIRES	1 1/2" PIPE
4" SLEEVE	41-60 WIRES	2" PIPE
6" SLEEVE	61-99 WIRES	2 1/2"-3" PIPE
8" SLEEVE	100+ WIRES	4" PIPE
10" SLEEVE	N/A	6" PIPE

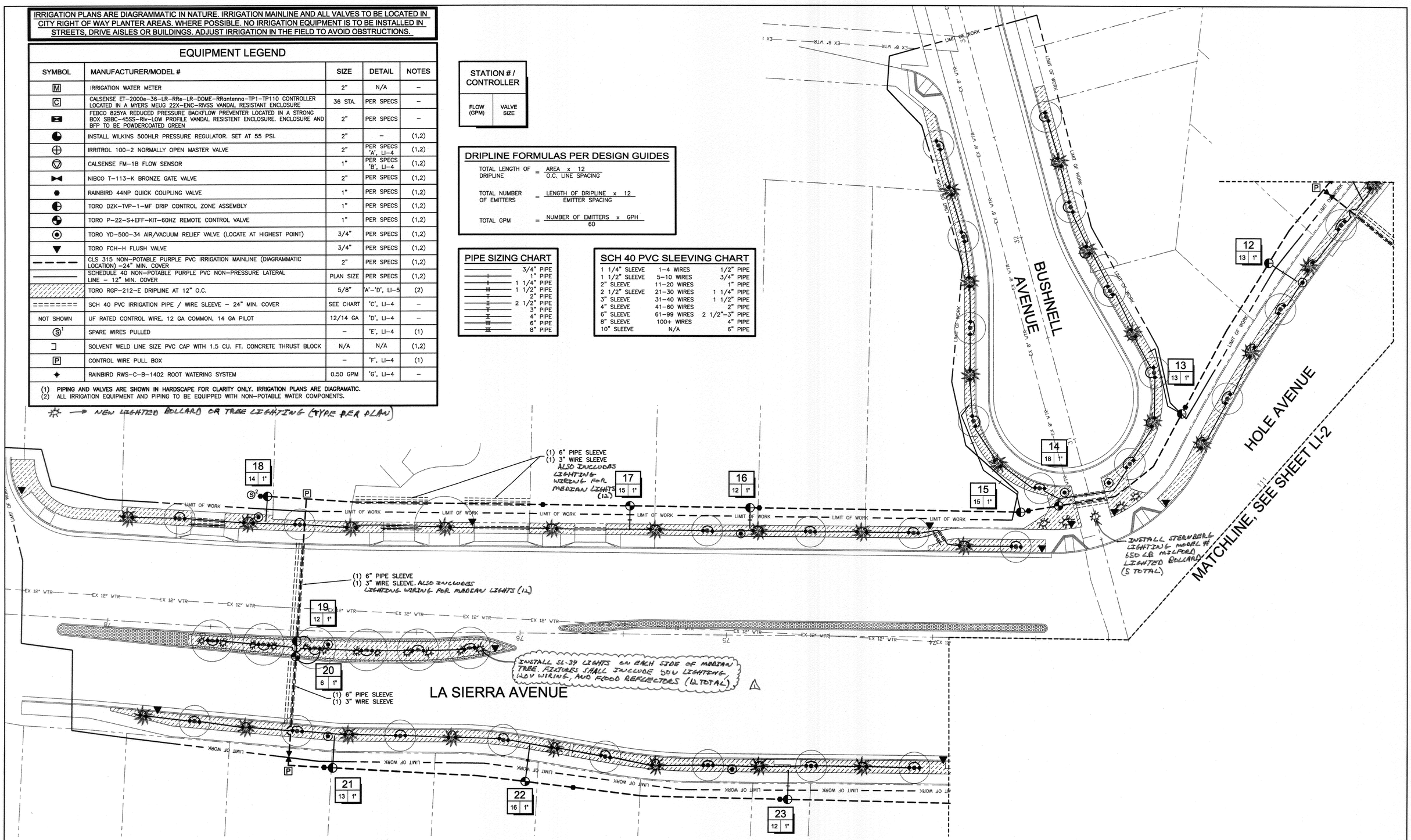

NORTH

REGISTERED LANDSCAPE ARCHITECT — TIMOTHY L. MALONEY — Signature — 10/31/11 Renewal Date — 7/20/10 Date — STATE OF CALIFORNIA

COMMUNITY WORKS DESIGN GROUP
4649 Brockton Avenue
Riverside, CA 92501
(951) 369-0700
Fax: (951) 369-4039
www.comworksdg.com

BENCHMARK G3-F2

P.K NAIL AND CITY ENGINEER TAG IN THE NORTHERLY CURB OF PIERCE STREET MIDWAY BETWEEN ROSE AVENUE AND HOLLYHOCK LANE.

ELEVATION: 723.297

CITY OF RIVERSIDE

ENGINEER IN RESPONSIBLE CHARGE

Edward Lara

EDWARD LARA
R.C.E. No. 63753 expires 9/30/10
DATE July 26, 2010

REGISTERED PROFESSIONAL ENGINEER — EDWARD LARA — No. 63753 — Exp. 9-30-10 — CIVIL — STATE OF CALIFORNIA

MARK	REVISIONS	APPR.	DATE
1	Approved Lighting Note per Addm No. 2	E.L.	8/19/10

DESIGNED BY TIM DRAWN BY KCK CHECKED BY TIM

APPROVED BY	BY	DATE
PRINCIPAL ENGINEER	PH	7/28/10
CONSTRUCTION ADMIN.		
SURVEYOR		
STREET SERVICES		7-29-10
TRAFFIC ENGINEER		7-27-10
Landscape		7-28-10

CITY OF RIVERSIDE, CALIFORNIA
PUBLIC WORKS DEPARTMENT

APPROVED BY

7/28/10
~~CONSTRUCTION ADMINISTRATION~~
CITY ENGINEER — DATE

STREET IMPROVEMENTS AT FIVE-POINT

LANDSCAPE & IRRIGATION PLANS LI-1 IRRIGATION PLAN

HORIZ. SCALE: 1"=20'

DESIGN WORK ORDER. NO. 0704839
CONSTR. WORK ORDER. NO. 1101889

R-4019L

SHEET 2 OF 10

JOB NUMBER: 100513

STATION # / CONTROLLER	
FLOW (GPM)	VALVE SIZE

DRIPLINE FORMULAS PER DESIGN GUIDES

TOTAL LENGTH OF DRIPLINE = (AREA x 12) / O.C. LINE SPACING

TOTAL NUMBER OF EMITTERS = (LENGTH OF DRIPLINE x 12) / EMITTER SPACING

TOTAL GPM = (NUMBER OF EMITTERS x GPH) / 60

PIPE SIZING CHART

I	3/4" PIPE
	1" PIPE
II	1 1/4" PIPE
III	1 1/2" PIPE
	2" PIPE
I	2 1/2" PIPE
	3" PIPE
II	4" PIPE
III	6" PIPE
III	8" PIPE

SCH 40 PVC SLEEVING CHART

1 1/4" SLEEVE	1–4 WIRES	1/2" PIPE
1 1/2" SLEEVE	5–10 WIRES	3/4" PIPE
2" SLEEVE	11–20 WIRES	1" PIPE
2 1/2" SLEEVE	21–30 WIRES	1 1/4" PIPE
3" SLEEVE	31–40 WIRES	1 1/2" PIPE
4" SLEEVE	41–60 WIRES	2" PIPE
6" SLEEVE	61–99 WIRES	2 1/2"–3" PIPE
8" SLEEVE	100+ WIRES	4" PIPE
10" SLEEVE	N/A	6" PIPE

EQUIPMENT LEGEND

SYMBOL	MANUFACTURER/MODEL #	SIZE	DETAIL	NOTES
M	IRRIGATION WATER METER	2"	N/A	–
C	CALSENSE ET–2000e–36–LR–RRe–LR–DOME–RRontenna–TP1–TP110 CONTROLLER LOCATED IN A MYERS MEUG 22X–ENC–RIVSS VANDAL RESISTANT ENCLOSURE	36 STA.	PER SPECS	–
	FEBCO 825YA REDUCED PRESSURE BACKFLOW PREVENTER LOCATED IN A STRONG BOX SBBC–45SS–Riv–LOW PROFILE VANDAL RESISTENT ENCLOSURE. ENCLOSURE AND BFP TO BE POWDERCOATED GREEN	2"	PER SPECS	–
	INSTALL WILKINS 500HLR PRESSURE REGULATOR. SET AT 55 PSI.	2"	–	(1,2)
	IRRITROL 100–2 NORMALLY OPEN MASTER VALVE	2"	PER SPECS 'A', LI–4	(1,2)
	CALSENSE FM–1B FLOW SENSOR	1"	PER SPECS 'B', LI–4	(1,2)
	NIBCO T–113–K BRONZE GATE VALVE	2"	PER SPECS	(1,2)
	RAINBIRD 44NP QUICK COUPLING VALVE	1"	PER SPECS	(1,2)
	TORO DZK–TVP–1–MF DRIP CONTROL ZONE ASSEMBLY	1"	PER SPECS	(1,2)
	TORO P–22–S+EFF–KIT–60HZ REMOTE CONTROL VALVE	1"	PER SPECS	(1,2)
	TORO YD–500–34 AIR/VACUUM RELIEF VALVE (LOCATE AT HIGHEST POINT)	3/4"	PER SPECS	(1,2)
	TORO FCH–H FLUSH VALVE	3/4"	PER SPECS	(1,2)
	CLS 315 NON–POTABLE PURPLE PVC IRRIGATION MAINLINE (DIAGRAMMATIC LOCATION) –24" MIN. COVER	2"	PER SPECS	(1,2)
	SCHEDULE 40 NON–POTABLE PURPLE PVC NON–PRESSURE LATERAL LINE – 12" MIN. COVER	PLAN SIZE	PER SPECS	(1,2)
	TORO RGP–212–E DRIPLINE AT 12" O.C.	5/8"	'A'–'D', LI–5	(2)
	SCH 40 PVC IRRIGATION PIPE / WIRE SLEEVE – 24" MIN. COVER	SEE CHART	'C', LI–4	–
NOT SHOWN	UF RATED CONTROL WIRE, 12 GA COMMON, 14 GA PILOT	12/14 GA	'D', LI–4	–
S1	SPARE WIRES PULLED	–	'E', LI–4	(1)
	SOLVENT WELD LINE SIZE PVC CAP WITH 1.5 CU. FT. CONCRETE THRUST BLOCK	N/A	N/A	(1,2)
P	CONTROL WIRE PULL BOX	–	'F', LI–4	(1)
	RAINBIRD RWS–C–B–1402 ROOT WATERING SYSTEM	0.50 GPM	'G', LI–4	–

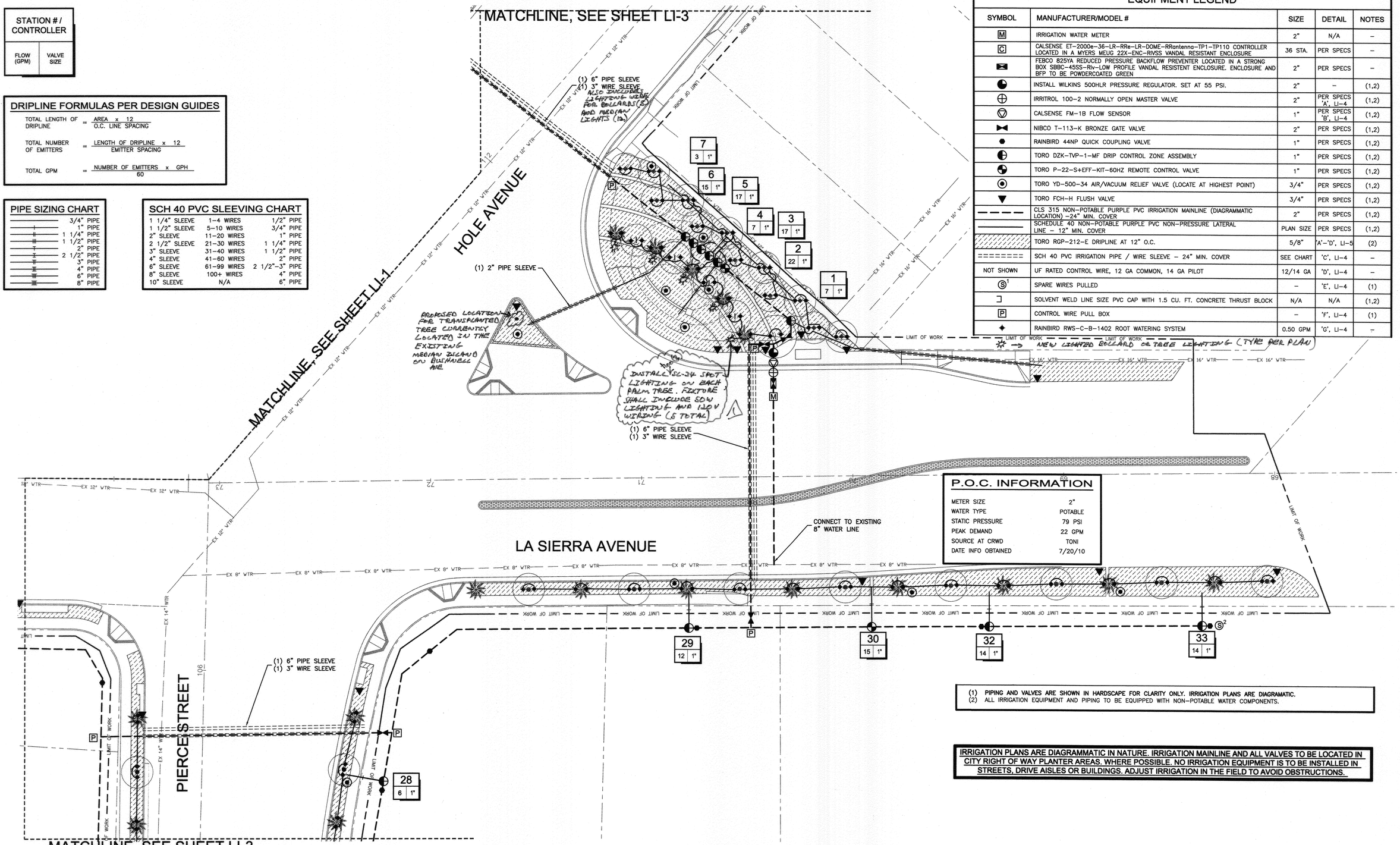

P.O.C. INFORMATION

METER SIZE	2"
WATER TYPE	POTABLE
STATIC PRESSURE	79 PSI
PEAK DEMAND	22 GPM
SOURCE AT CRWD	TONI
DATE INFO OBTAINED	7/20/10

(1) PIPING AND VALVES ARE SHOWN IN HARDSCAPE FOR CLARITY ONLY. IRRIGATION PLANS ARE DIAGRAMATIC.
(2) ALL IRRIGATION EQUIPMENT AND PIPING TO BE EQUIPPED WITH NON–POTABLE WATER COMPONENTS.

IRRIGATION PLANS ARE DIAGRAMMATIC IN NATURE. IRRIGATION MAINLINE AND ALL VALVES TO BE LOCATED IN CITY RIGHT OF WAY PLANTER AREAS. WHERE POSSIBLE. NO IRRIGATION EQUIPMENT IS TO BE INSTALLED IN STREETS, DRIVE AISLES OR BUILDINGS. ADJUST IRRIGATION IN THE FIELD TO AVOID OBSTRUCTIONS.

NORTH

REGISTERED LANDSCAPE ARCHITECT — TIMOTHY L. MALONEY — NO. 2710 — Signature — 10/31/11 Renewal Date — 7/20/10 Date — STATE OF CALIFORNIA

COMMUNITY WORKS DESIGN GROUP
4649 Brockton Avenue
Riverside, CA 92501
(951) 369–0700
Fax: (951) 369–4039
www.comworksdg.com

BENCHMARK G3–F2

P.K NAIL AND CITY ENGINEER TAG IN THE NORTHERLY CURB OF PIERCE STREET MIDWAY BETWEEN ROSE AVENUE AND HOLLYHOCK LANE.

ELEVATION: 723.297

ENGINEER IN RESPONSIBLE CHARGE

Edward Lara

EDWARD LARA
R.C.E. No. 63753 expires 9/30/10
DATE July 26, 2010

REGISTERED PROFESSIONAL ENGINEER — EDWARD LARA — No. 63753 — Exp. 9–30–10 — CIVIL — STATE OF CALIFORNIA

MARK	REVISIONS	APPR.	DATE
1	Revised Note per Addendum No. 2.	CL	8/19/10

DESIGNED BY TIM DRAWN BY KCK CHECKED BY TIM

APPROVED BY	BY	DATE
PRINCIPAL ENGINEER		7/28/10
CONSTRUCTION ADMIN.		
SURVEYOR		
STREET SERVICES		7-27-10
TRAFFIC ENGINEER		7-27-10
Landscape		7/28/10

CITY OF RIVERSIDE, CALIFORNIA
PUBLIC WORKS DEPARTMENT

APPROVED BY

~~CONSTRUCTION ADMINISTRATION~~ CITY ENGINEER — DATE 7/28/10

STREET IMPROVEMENTS AT FIVE-POINT

LANDSCAPE & IRRIGATION PLANS LI–2 IRRIGATION PLAN

HORIZ. SCALE: 1"=20'

DESIGN WORK ORDER NO. 0704839
CONSTR. WORK ORDER NO. 1101889

R–4019L

SHEET 3 OF 10

JOB NUMBER: 100513

IRRIGATION PLANS ARE DIAGRAMMATIC IN NATURE. IRRIGATION MAINLINE AND ALL VALVES TO BE LOCATED IN CITY RIGHT OF WAY PLANTER AREAS. WHERE POSSIBLE. NO IRRIGATION EQUIPMENT IS TO BE INSTALLED IN STREETS, DRIVE AISLES OR BUILDINGS. ADJUST IRRIGATION IN THE FIELD TO AVOID OBSTRUCTIONS.

EQUIPMENT LEGEND

SYMBOL	MANUFACTURER/MODEL #	SIZE	DETAIL	NOTES
M	IRRIGATION WATER METER	2"	N/A	–
C	CALSENSE ET-2000e-36-LR-RRe-LR-DOME-RRantenna-TP1-TP110 CONTROLLER LOCATED IN A MYERS MEUG 22X-ENC-RIVSS VANDAL RESISTANT ENCLOSURE	36 STA.	PER SPECS	–
	FEBCO 825YA REDUCED PRESSURE BACKFLOW PREVENTER LOCATED IN A STRONG BOX SBBC-45SS-Riv-LOW PROFILE VANDAL RESISTENT ENCLOSURE. ENCLOSURE AND BFP TO BE POWDERCOATED GREEN	2"	PER SPECS	–
	INSTALL WILKINS 500HLR PRESSURE REGULATOR. SET AT 55 PSI.	2"	–	(1,2)
	IRRITROL 100-2 NORMALLY OPEN MASTER VALVE	2"	PER SPECS 'A', LI-4	(1,2)
	CALSENSE FM-1B FLOW SENSOR	1"	PER SPECS 'B', LI-4	(1,2)
	NIBCO T-113-K BRONZE GATE VALVE	2"	PER SPECS	(1,2)
	RAINBIRD 44NP QUICK COUPLING VALVE	1"	PER SPECS	(1,2)
	TORO DZK-TVP-1-MF DRIP CONTROL ZONE ASSEMBLY	1"	PER SPECS	(1,2)
	TORO P-22-S+EFF-KIT-60HZ REMOTE CONTROL VALVE	1"	PER SPECS	(1,2)
	TORO YD-500-34 AIR/VACUUM RELIEF VALVE (LOCATE AT HIGHEST POINT)	3/4"	PER SPECS	(1,2)
	TORO FCH-H FLUSH VALVE	3/4"	PER SPECS	(1,2)
	CLS 315 NON-POTABLE PURPLE PVC IRRIGATION MAINLINE (DIAGRAMMATIC LOCATION) -24" MIN. COVER	2"	PER SPECS	(1,2)
	SCHEDULE 40 NON-POTABLE PURPLE PVC NON-PRESSURE LATERAL LINE - 12" MIN. COVER	PLAN SIZE	PER SPECS	(1,2)
	TORO RGP-212-E DRIPLINE AT 12" O.C.	5/8"	'A'-'D', LI-5	(2)
	SCH 40 PVC IRRIGATION PIPE / WIRE SLEEVE - 24" MIN. COVER	SEE CHART	'C', LI-4	–
NOT SHOWN	UF RATED CONTROL WIRE, 12 GA COMMON, 14 GA PILOT	12/14 GA	'D', LI-4	–
S	SPARE WIRES PULLED	–	'E', LI-4	(1)
	SOLVENT WELD LINE SIZE PVC CAP WITH 1.5 CU. FT. CONCRETE THRUST BLOCK	N/A	N/A	(1,2)
P	CONTROL WIRE PULL BOX	–	'F', LI-4	(1)
	RAINBIRD RWS-C-B-1402 ROOT WATERING SYSTEM	0.50 GPM	'G', LI-4	–

(1) PIPING AND VALVES ARE SHOWN IN HARDSCAPE FOR CLARITY ONLY. IRRIGATION PLANS ARE DIAGRAMATIC.
(2) ALL IRRIGATION EQUIPMENT AND PIPING TO BE EQUIPPED WITH NON-POTABLE WATER COMPONENTS.

DRIPLINE FORMULAS PER DESIGN GUIDES

TOTAL LENGTH OF DRIPLINE = AREA x 12 / O.C. LINE SPACING

TOTAL NUMBER OF EMITTERS = LENGTH OF DRIPLINE x 12 / EMITTER SPACING

TOTAL GPM = NUMBER OF EMITTERS x GPH / 60

PIPE SIZING CHART

3/4" PIPE
1" PIPE
1 1/4" PIPE
1 1/2" PIPE
2" PIPE
2 1/2" PIPE
3" PIPE
4" PIPE
6" PIPE
8" PIPE

SCH 40 PVC SLEEVING CHART

1 1/4" SLEEVE	1-4 WIRES	1/2" PIPE
1 1/2" SLEEVE	5-10 WIRES	3/4" PIPE
2" SLEEVE	11-20 WIRES	1" PIPE
2 1/2" SLEEVE	21-30 WIRES	1 1/4" PIPE
3" SLEEVE	31-40 WIRES	1 1/2" PIPE
4" SLEEVE	41-60 WIRES	2" PIPE
6" SLEEVE	61-99 WIRES	2 1/2"-3" PIPE
8" SLEEVE	100+ WIRES	4" PIPE
10" SLEEVE	N/A	6" PIPE

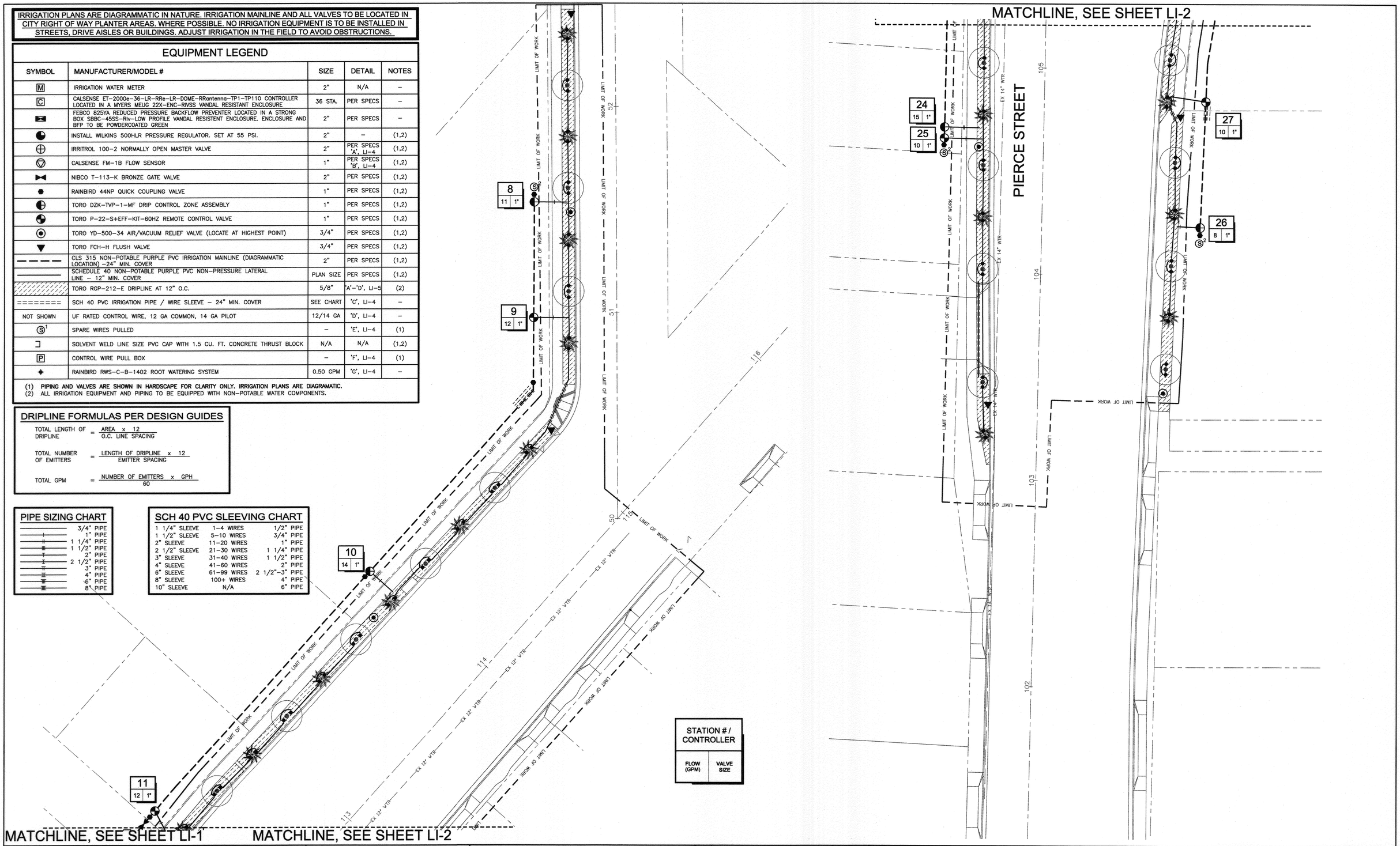

NORTH

REGISTERED LANDSCAPE ARCHITECT — TIMOTHY J. MALONEY, NO. 4310 — Signature — Renewal Date 10/31/11 — Date 7/26/10 — STATE OF CALIFORNIA

COMMUNITY WORKS DESIGN GROUP
4649 Brockton Avenue
Riverside, CA 92501
(951) 369-0700
Fax: (951) 369-4039
www.comworksdg.com

BENCHMARK G3-F2

P.K NAIL AND CITY ENGINEER TAG IN THE NORTHERLY CURB OF PIERCE STREET MIDWAY BETWEEN ROSE AVENUE AND HOLLYHOCK LANE.

ELEVATION: 723.297

CITY OF RIVERSIDE

ENGINEER IN RESPONSIBLE CHARGE
EDWARD LARA
R.C.E. No. 63753 expires 9/30/10
DATE July 26, 2010

REGISTERED PROFESSIONAL ENGINEER — EDWARD LARA — No. 63753 — Exp. 9-30-10 — CIVIL — STATE OF CALIFORNIA

MARK	REVISIONS	APPR.	DATE

DESIGNED BY TIM DRAWN BY KCK CHECKED BY TIM

APPROVED BY	BY	DATE
PRINCIPAL ENGINEER	RH	7/28/10
CONSTRUCTION ADMIN.		
SURVEYOR		
STREET SERVICES		7.27.10
TRAFFIC ENGINEER		7.27.10
Landscape		7.28.10

CITY OF RIVERSIDE, CALIFORNIA
PUBLIC WORKS DEPARTMENT

APPROVED BY ~~CONSTRUCTION ADMINISTRATION~~ CITY ENGINEER — DATE 7/28/10

STREET IMPROVEMENTS AT FIVE-POINT

LANDSCAPE & IRRIGATION PLANS
LI-3 IRRIGATION PLAN

HORIZ. SCALE: 1"=20'

DESIGN WORK ORDER. NO. 0704839
CONSTR. WORK ORDER. NO. 1101889

R-4019L

SHEET 4 OF 10

JOB NUMBER: 100513

NOTE:
USE TEFLON TAPE ON
ALL MALE PIPE THREADS.

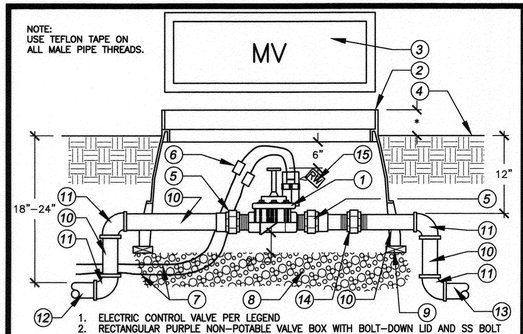

1. ELECTRIC CONTROL VALVE PER LEGEND
2. RECTANGULAR PURPLE NON–POTABLE VALVE BOX WITH BOLT–DOWN LID AND SS BOLT
3. HEAT BRAND "MV" ON LID IN 2" HIGH CHARACTERS
4. FINISH GRADE
5. PVC SCH 40 MALE ADAPTER
6. WATERPROOF WIRE CONNECTION W/36" EXPANSION LOOP
7. #14 UF WIRES TO CONTROLLER MASTER VALVE OUTPUT
8. 3/4" CRUSHED ROCK – 6" DEEP
9. COMMON BRICK – 4 REQUIRED
10. PVC MAINLINE PER LEGEND – LENGTH AS REQUIRED
11. PVC SCH 40 ELL – SxS
12. MAINLINE PIPING FROM POINT OF CONNECTION
13. MAINLINE PIPING TO CONTROL VALVES
14. PVC UNION – SIZE AS REQUIRED
15. CHRISTY'S RECLAIMED WATER TAG OR EQUAL

* 1/2" IN TURF AREAS, 2" IN SHRUB AREAS

A Master Valve

NOTE:
USE TEFLON TAPE ON
ALL MALE PIPE THREADS.

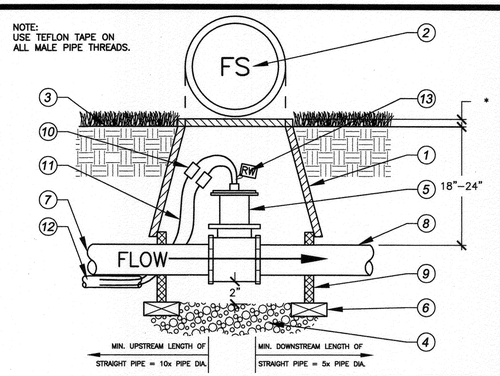

1. 10" ROUND PURPLE NON–POTABLE PLASTIC VALVE BOX WITH LOCKING LID AND SS BOLT
2. HEAT BRAND "FS" ON LID IN 2" HIGH CHARACTERS
3. FINISH GRADE
4. 3/4" CRUSHED ROCK – 4" DEEP
5. FLOW SENSOR PER LEGEND
6. COMMON BRICK – 4 REQUIRED
7. PVC MAINLINE FROM POC – PER LEGEND
8. PVC MAINLINE TO SYSTEM –PER LEGEND
9. VALVE BOX EXTENSIONS AS REQUIRED
10. WATERPROOF WIRE CONNECTORS WITH 36" EXPANSION LOOP
11. CABLE TO TRANSMITTER/CONTROLLER PER MANUFACTURER
12. 1" PVC WIRE CONDUIT TO CONTROLLER
13. CHRISTY'S RECLAIMED WATER TAG OR EQUAL

* 1/2" IN TURF AREAS, 2" IN SHRUB AREAS

B Flow Sensor

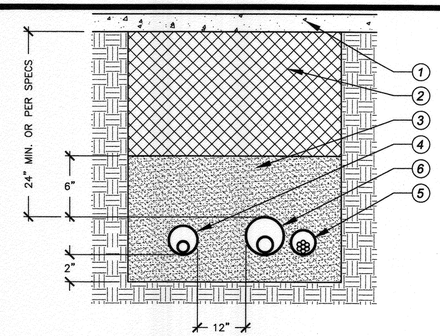

1. HARDSCAPE (TYPICAL)
2. CLEAN BACKFILL – 90% COMPACTION REQUIRED – SEE SPECS
3. SAND (TYPICAL)
4. PURPLE NON–PRESSURE LATERAL LINE / SLEEVE (SIZE PER CHART)
5. CONTROL WIRE SLEEVE ADJACENT TO MAINLINE SLEEVE (SIZE PER CHART)
6. PURPLE PRESSURE SUPPLY LINE / SLEEVE (SIZE PER CHART)

NOTES:
SIZE ALL SLEEVES PER SLEEVING CHART ON PLANS. EXTEND SLEEVES 12" BEYOND EDGE OF HARDSCAPE ON BOTH ENDS. RECLAIMED WATER SLEEVES TO BE A MINIMUM 42"–48" DEEP.

C Sleeving

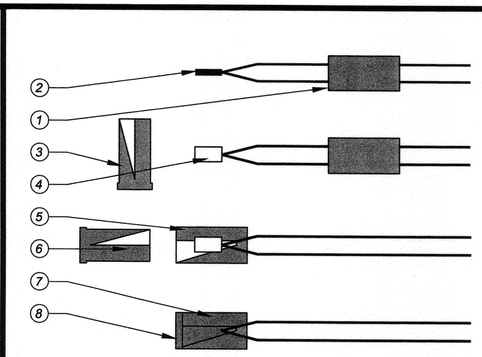

1. SLIP SPEARS DS–100 DRI–SPLICE BASE SOCKET OVER END OF WIRES
2. STRIP WIRES APPROX. 5/8" FROM ENDS – TWIST TOGETHER
3. APPLY SPEARS DS–300 DRI–SPLICE SEALER TO OUTSIDE OF SEALING PLUG AND FILL CAVITY WITH SEALER
4. PUT CRIMP END OVER WIRE ENDS – CRIMP SLEEVE AND CUT OFF EXCESS WIRE
5. PULL DS–100 BASE SOCKET OVER END OF WIRES AS FAR AS POSSIBLE
6. PUSH DS–100 SEALING PLUG INTO BASE SOCKET
7. PUSH WIRES TO END OF BASE SOCKET TO INSURE COMPLETE SEALING OF CONNECTION
8. COMPLETED WATERPROOF WIRE CONNECTION

D Wire Connections

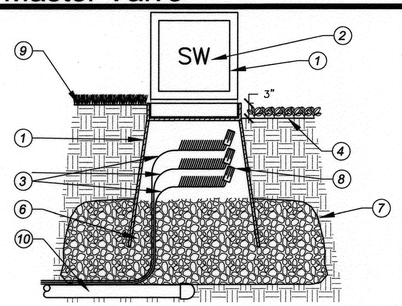

1. STANDARD RECTANGULAR VALVE BOX WITH BOLT DOWN COVER. (INDEPENDENT FROM ALL OTHER BOXES) USE STAINLESS BOLT, NUT AND WASHER. BOX TO BE PLACED AT RIGHT ANGLE TO HARDSCAPE EDGE.
2. HEAT BRAND 'SW' ONTO LID IN 2" CHARACTERS
3. 3' COIL OF SPARE WIRES (PER PLAN) AND ONE COMMON WIRE CONTINUOUS FROM CONTROLLER. SEE EQUIPMENT LEGEND FOR SIZE AND COLOR.
4. FINISH GRADE IN SHRUB AREAS – 3" BELOW TOP OF BOX
5. PRESSURE SUPPLY LINE PER PLAN
6. 3/4" PEA GRAVEL. FILL TO TOP OF VALVE BOX HOLES
7. LANDSCAPE FABRIC
8. SPEARS DS–100 DRI–SPLICE CONNECTION WITH CRIMP SLEEV AND DS–300 SEALANT
9. FINISH GRADE IN TURF AREAS – 1" BELOW TOP OF BOX
10. CAP PRESSURE SUPPLY LINE DIRECTLY BELOW CENTER OF SPARE WIRE VALVE BOX (WHERE OCCURS)

E Spare Wire Box

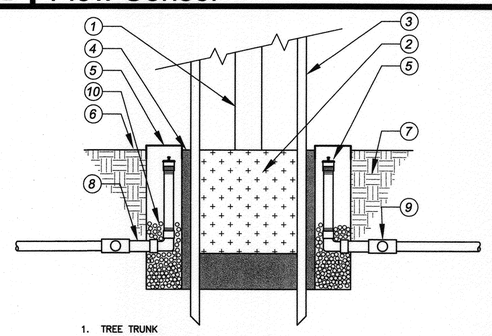

1. TREE TRUNK
2. TREE ROOTBALL
3. 3" LODGE POLE PINE STAKES PER PLANTING PLAN
4. PLANT BACKFILL PER PLANTING PLAN
5. BUBBLER ASSEMBLY PER IRRIGATION LEGEND
6. FINISH GRADE
7. UNDISTURBED NATIVE SOIL
8. 1/2" CLASS 315 PVC LATERAL LINE
9. SCH 40 PVC TEE AROUND PLANTING PIT
10. PEA GRAVEL IN BASE OF DRAIN PIPE

* INSTALL ASSEMBLY WITH CAP FLUSH TO GRADE

F Tree Bubbler Heads

G

H

REGISTERED LANDSCAPE ARCHITECT
TIMOTHY L. MALONEY No. 2310
Signature 10/31/11
Renewal Date
7/20/10
Date
STATE OF CALIFORNIA

COMMUNITY WORKS DESIGN GROUP
4649 Brockton Avenue
Riverside, CA 92501
(951) 369–0700
Fax: (951) 369–4039
www.comworksdg.com

BENCHMARK G3–F2

P.K NAIL AND CITY ENGINEER TAG IN THE NORTHERLY CURB OF PIERCE STREET MIDWAY BETWEEN ROSE AVENUE AND HOLLYHOCK LANE.

ELEVATION: 723.297

CITY OF RIVERSIDE

ENGINEER IN RESPONSIBLE CHARGE

Edward Lara

EDWARD LARA
R.C.E. No. 63753 expires 9/30/10
DATE July 26, 2010

REGISTERED PROFESSIONAL ENGINEER
EDWARD LARA
No. 63753
Exp. 9-30-10
CIVIL
STATE OF CALIFORNIA

MARK	REVISIONS	APPR.	DATE

DESIGNED BY TIM DRAWN BY KCK CHECKED BY TIM

APPROVED BY	BY	DATE
PRINCIPAL ENGINEER	PH	7/29/10
CONSTRUCTION ADMIN.		
SURVEYOR		
STREET SERVICES	[illegible]	7-29-10
TRAFFIC ENGINEER	[illegible]	3-23-10
Landscape	[illegible]	7/28/10

CITY OF RIVERSIDE, CALIFORNIA
PUBLIC WORKS DEPARTMENT

APPROVED BY

[illegible] 7/28/10
~~CONSTRUCTION ADMINISTRATION~~
CITY ENGINEER
DATE

STREET IMPROVEMENTS AT FIVE–POINT

LANDSCAPE & IRRIGATION PLANS
LI–4 IRRIGATION DETAILS

HORIZ. SCALE: N.T.S.

DESIGN WORK ORDER. NO. 0704839
CONSTR. WORK ORDER. NO. 1101889

R–4019L

SHEET 5 OF 10

JOB NUMBER: 100513

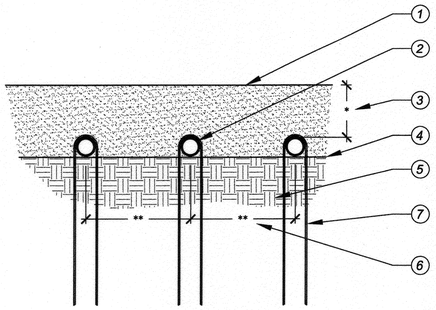

1. TOP OF MULCH
2. TECHLINE DRIP LINES
3. (*) TECHLINE BURIAL DEPTH – 3 INCHES
4. FINISHED GRADE
5. SUB–GRADE OF NATIVE SOIL
6. (**) LATERAL DRIP LINE SPACING – 12 INCHES
7. RAINBIRD TDS–050 TIE–DOWN STAKE AT 5' O.C. MAX.

A Techline Burial

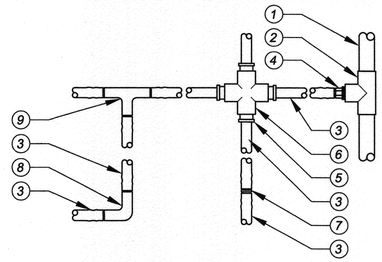

1. PVC PIPE (PER LEGEND)
2. SCH. 40 PVC TEE
3. TECHLINE DRIP TUBING (PER LEGEND)
4. SCH. 40 PVC MALE ADAPTER
5. COMPRESSION ADAPTER FITTING
6. SCH. 40 PVC CROSS
7. COMPRESSION COUPLING
8. COMPRESSION ELBOW FITTING
9. COMPRESSION TEE FITTING

NOTES:
ALL PERIMETER LATERALS ARE TO BE 2" TO 4" FROM THE EDGE OF PLANTER AREA. CONTRACTOR TO SIZE PVC SUPPLY MANIFOLD TO COMPENSATE FOR FLUSH VALVE FLOWS. THE TOTAL LENGTH OF ALL INTERCONNECTED DRIP LINE SHALL NOT EXCEED THE MAXIMUM RUN LENGTH.

B Techline Fittings

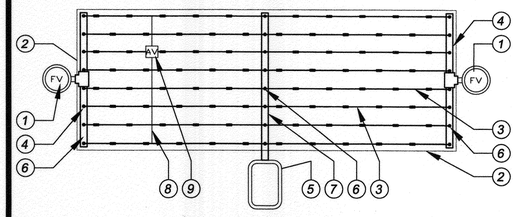

1. AUTOMATIC FLUSH VALVE (PER LEGEND) PLUMBED TO TUBING
2. AREA PERIMETER
3. TECHLINE DRIP TUBING (PER LEGEND)
4. PVC FLUSH MANIFOLD
5. REMOTE CONTROL VALVE WITH FILTER AND PRESSURE REGULATOR (SEE RCV DETAIL)
6. MANIFOLD–TO–ELBOW CONNECTION
7. PVC SUPPLY MANIFOLD
8. AIR/VACUUM RELIEF VALVE (PER LEGEND) PLUMBED TO BLANK TUBING AT EACH HIGH POINT
9. AIR/RELIEF BLANK TUBING LATERAL ON MOUNDS OR BERMS

NOTES:
ALL PERIMETER LATERALS ARE TO BE 2" TO 4" FROM THE EDGE OF PLANTER AREA.

C Techline Center Connection

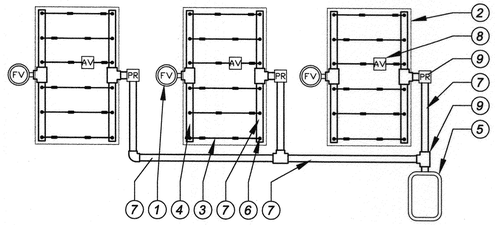

1. AUTOMATIC FLUSH VALVE (PER LEGEND) PLUMBED TO TUBING
2. AREA PERIMETER
3. TECHLINE DRIP TUBING (PER LEGEND)
4. PVC FLUSH MANIFOLD
5. REMOTE CONTROL VALVE WITH FILTER AND PRESSURE REGULATOR (SEE RCV DETAIL)
6. MANIFOLD–TO–ELBOW CONNECTION
7. PVC SUPPLY MANIFOLD
8. AIR/VACUUM RELIEF VALVE (PER LEGEND) PLUMBED TO BLANK TUBING AT EACH HIGH POINT
9. PRESSURE REGULATOR LOCATED AT EACH SUPPLY MANIFOLD

NOTES:
ALL PERIMETER LATERALS ARE TO BE 2" TO 4" FROM THE EDGE OF PLANTER AREA. CONTRACTOR TO SIZE PVC SUPPLY MANIFOLD TO COMPENSATE FOR FLUSH VALVE FLOWS.

D Techline In Islands

E

F

G

H

REGISTERED LANDSCAPE ARCHITECT
TIMOTHY L. MALONEY NO. 4149
Signature
10/31/11
Renewal Date
7/20/10
Date
STATE OF CALIFORNIA

COMMUNITY WORKS DESIGN GROUP
4649 Brockton Avenue
Riverside, CA 92501
(951) 369–0700
Fax: (951) 369–4039
www.comworksdg.com

BENCHMARK G3–F2

P.K NAIL AND CITY ENGINEER TAG IN THE NORTHERLY CURB OF PIERCE STREET MIDWAY BETWEEN ROSE AVENUE AND HOLLYHOCK LANE.

ELEVATION: 723.297

CITY OF RIVERSIDE

ENGINEER IN RESPONSIBLE CHARGE

EDWARD LARA
R.C.E. No. 63753 expires 9/30/10
DATE July 26, 2010

REGISTERED PROFESSIONAL ENGINEER
EDWARD LARA
No. 63753
Exp. 9–30–10
CIVIL
STATE OF CALIFORNIA

MARK	REVISIONS	APPR.	DATE

DESIGNED BY TIM DRAWN BY KCK CHECKED BY TIM

APPROVED BY	BY	DATE
PRINCIPAL ENGINEER		7/23/10
CONSTRUCTION ADMIN.		
SURVEYOR		
STREET SERVICES		7-29-10
TRAFFIC ENGINEER		7-29-10
Landscape		7-29-10

CITY OF RIVERSIDE, CALIFORNIA
PUBLIC WORKS DEPARTMENT

APPROVED BY

~~CONSTRUCTION ADMINISTRATION~~
CITY ENGINEER

DATE 7/28/10

STREET IMPROVEMENTS AT FIVE–POINT

LANDSCAPE & IRRIGATION PLANS
LI–5 IRRIGATION DETAILS

HORIZ. SCALE: N.T.S.

DESIGN WORK ORDER. NO. 0704839
CONSTR. WORK ORDER. NO. 1101889

R–4019L

SHEET 6 OF 10

JOB NUMBER: 100513

PLANTING LEGEND:

	BOTANIC NAME	COMMON NAME	SIZE / SPACING	DETAIL
TREES				
	CERCIS CANADENSIS	EASTERN REDBUD	36" BOX	PER SPECS
	LAGERSTROEMIA INDICA 'WATERMELON RED'	RED CRAPE MYRTLE	36" BOX STD.	PER SPECS
	MELALEUCA LEUCADENDRON	CAJEPUT TREE	36" BOX	PER SPECS
	PODOCARPUS GRACILIOR	FERN PINE	36" BOX	PER SPECS
	WASHINGTONIA ROBUSTA	MEXICAN FAN PALM	12' B.T.H.	PER SPECS
	RELOCATED MEMORIAL TREE			
GROUNDCOVERS				
	ANIGOZANTHOS 'BUSH PEARL'	DWARF PINK KANGAROO PAW	1 GAL @ 24" O..C	'B'&'C', LP-4
	CALLISTEMON 'LITTLE JOHN'	DWARF BOTTLEBRUSH	1 GAL @ 30" O.C.	'B'&'C', LP-4
	CISTUS PURPUREUS	ORCHID ROCKROSE	5 GAL @ 48" O.C.	'B'&'C', LP-4
	KNIPHOFIA TRIANGULARIS 'ORANGE FLAME'	RED HOT POKER	1 GAL @ 24" O.C.	'B'&'C', LP-4
	MUHLENBERGIA CAPILLARIS	PINK MUHLY	1 GAL @ 36" O.C.	'B'&'C', LP-4
	PELARGONIUM PELTATUM 'RED'	IVY GERANIUM	1 GAL @ 18" O.C.	'B'&'C', LP-4
	VERBENA RIGIDA 'PINK'	SANDPAPER VERBENA	1 GAL @ 36" O.C.	'B'&'C', LP-4

NOTES:
1. ALL TREES WITHIN 5' OF HARDSCAPE TO RECEIVE ROOTBARRIER PER DETAIL 'A', SHEET LP-4
2. ALL PLANTER AREAS TO RECEIVE A 3" MINIMUM DEPTH LAYER OF SHREDDED FOREST BARK MULCH

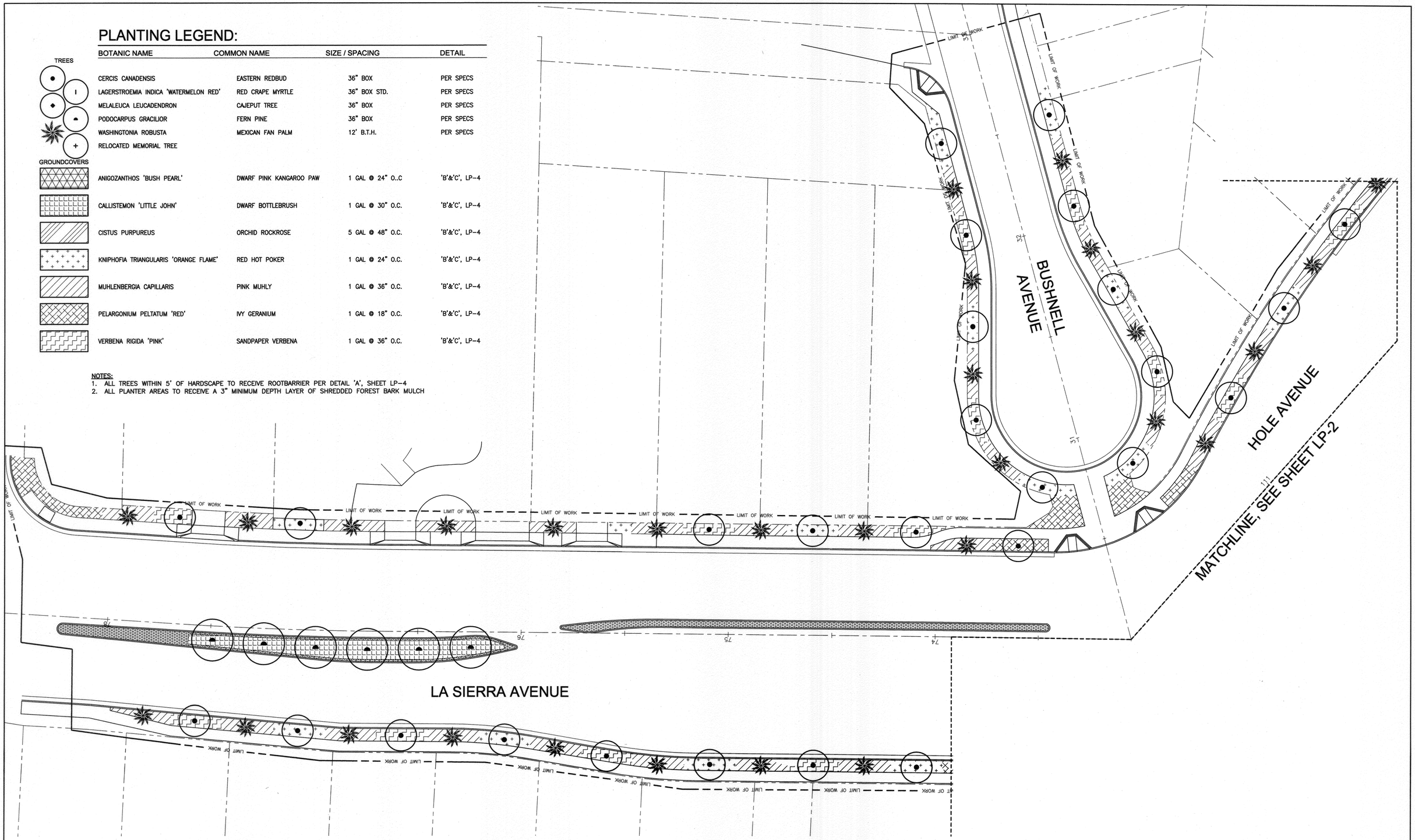

NORTH

REGISTERED LANDSCAPE ARCHITECT
T. MALONEY NO. 2110
Signature
10/31/11
Renewal Date
7/20/10
Date
STATE OF CALIFORNIA

COMMUNITY WORKS DESIGN GROUP
4649 Brockton Avenue
Riverside, CA 92501
(951) 369-0700
Fax: (951) 369-4039
www.comworksdg.com

BENCHMARK G3-F2

P.K NAIL AND CITY ENGINEER TAG IN THE NORTHERLY CURB OF PIERCE STREET MIDWAY BETWEEN ROSE AVENUE AND HOLLYHOCK LANE.

ELEVATION: 723.297

ENGINEER IN RESPONSIBLE CHARGE
EDWARD LARA
R.C.E. No. 63753 expires 9/30/10
DATE July 26, 2010

REGISTERED PROFESSIONAL ENGINEER
EDWARD LARA
No. 63753
Exp. 9-30-10
CIVIL
STATE OF CALIFORNIA

MARK	REVISIONS	APPR.	DATE

DESIGNED BY TIM DRAWN BY KCK CHECKED BY TIM

APPROVED BY	BY	DATE
PRINCIPAL ENGINEER	PH	7/28/10
CONSTRUCTION ADMIN.		
SURVEYOR		
STREET SERVICES	[illegible]	7-28-10
TRAFFIC ENGINEER	[illegible]	7-28-10
Landscape	[illegible]	7-28-10

CITY OF RIVERSIDE, CALIFORNIA
PUBLIC WORKS DEPARTMENT

APPROVED BY
[signature] 7/28/10
~~CONSTRUCTION ADMINISTRATION~~ DATE
CITY ENGINEER

STREET IMPROVEMENTS AT FIVE-POINT
LANDSCAPE & PLANTING PLANS
LP-1 PLANTING PLAN

HORIZ. SCALE: 1"=20'

DESIGN WORK ORDER. NO. 0704839
CONSTR. WORK ORDER. NO. 1101889

R-4019L

SHEET 7 OF 10

JOB NUMBER: 100513

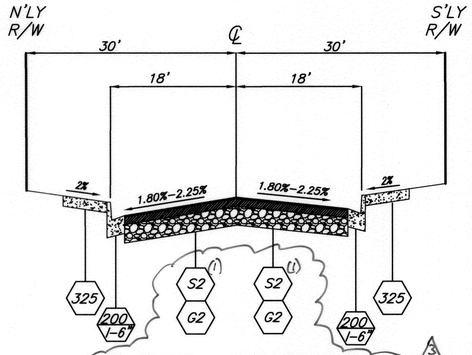

BUSHNELL AVE SECTION

R VALUE = 35
TI = 5
(1) STRUCTURAL SECTION INCLUDES OVERLAY

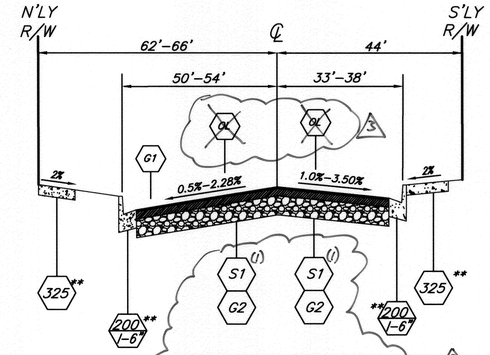

HOLE AVE SECTION

R VALUE = 10
TI = 8.0

CONTRACTOR TO OBTAIN 2-3 SOIL SAMPLES ALONG HOLE AVE, PROVIDE TO THE ENGINEER TO RE-EVALUATE PAVEMENT SECTION.
(1) STRUCTURAL SECTION INCLUDES OVERLAY

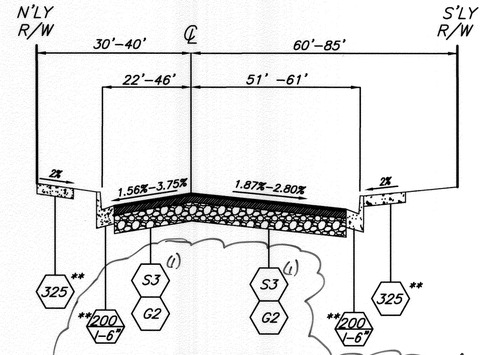

PIERCE ST SECTION

R VALUE = 55
TI = 8.5
(1) STRUCTURAL SECTION INCLUDES OVERLAY

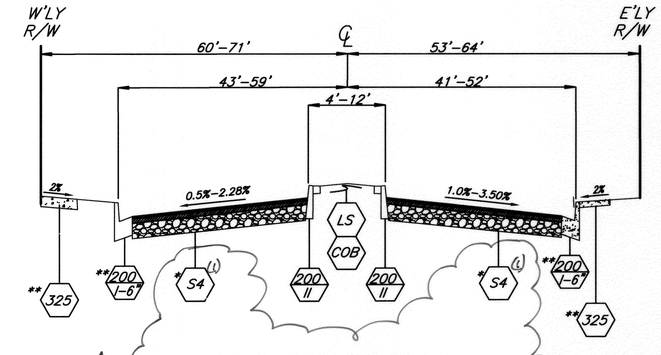

LA SIERRA AVE SECTION

R VALUE = 60
TI = 9

LA SIERRA AVENUE TO WELLS AVENUE

CONTRACTOR TO OBTAIN 2-3 SOIL SAMPLES ALONG LA SIERRA AVE, PROVIDE TO THE ENGINEER TO RE-EVALUATE PAVEMENT SECTION.
(1) STRUCTURAL SECTION INCLUDES OVERLAY

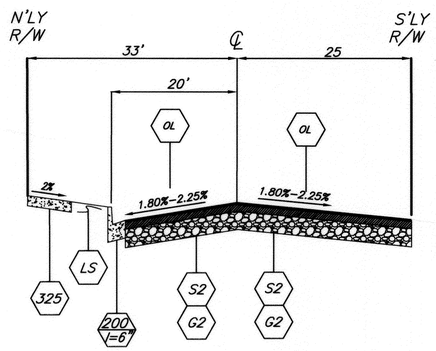

WELLS AVE SECTION

R VALUE = 10
TI = 8

* STRUCTURAL SECTION (S4) TYPICAL FOR MOST OF LA SIERRA. GRINDING AND OVERLAY ALONG LA SIERRA AT VARIOUS LOCATIONS. SEE PLANS FOR EXACT LOCATIONS.

** SIDEWALK, CURB AND GUTTER ALREADY EXISTS AT SOME AREAS WITHIN PROJECT LIMITS, PROTECT IN PLACE. CONSTRUCT NEW SIDEWALK, CURB & GUTTER AS NOTED ON THE PLANS.

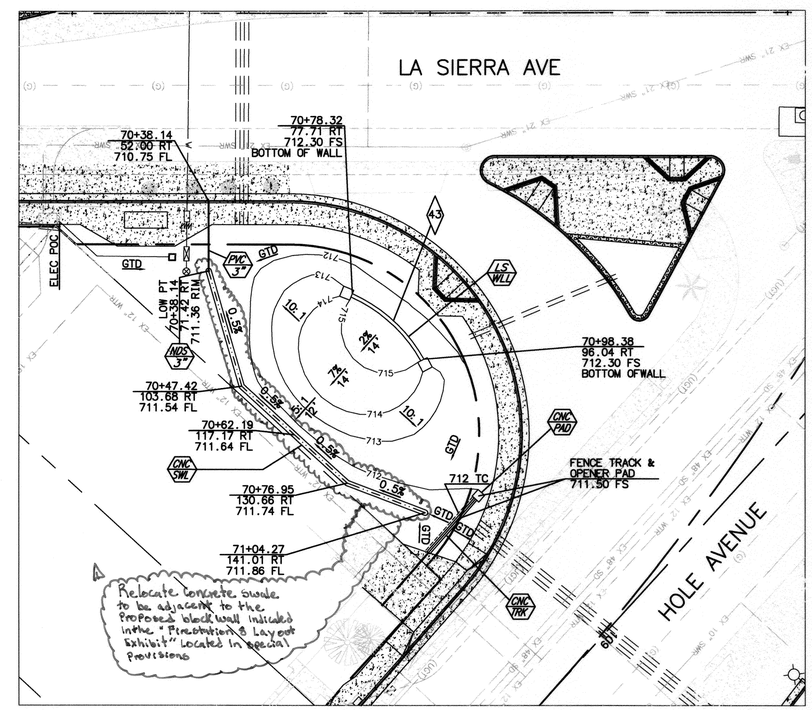

SW LA SIERRA AVE / HOLE AVE GRADING DETAIL

CURVE DATA TABLE					
◇	DELTA	RADIUS	LENGTH	TANGENT	REMARK
1	2°17'38"	1500.00'	60.05'	30.03	S'LY CURB
2	11°56'35"	700.00'	145.91'	73.22'	S'LY CURB
3	74°51'34"	50.00'	65.33'	38.27'	LA SIERRA AVE & PIERCE AVE CURB RETURN
4	90°00'00"	35.00'	54.98'	35.00'	PIERCE AVE & LA SIERRA AVE CURB RETURN
5	9°13'48"	250.00'	40.27'	20.18'	W'LY CURB
6	9°13'48"	250.00'	40.27'	20.18'	W'LY CURB
7	3°06'18"	800.00'	43.35'	21.68'	W'LY CURB
8	3°10'47"	800.00'	44.40'	22.21'	W'LY CURB
9	12°39'25"	90.00'	19.88'	9.98'	E'LY CURB
10	12°40'49"	90.00'	19.92'	10.00'	E'LY CURB
11	131°22'13"	65.00'	149.03'	143.86'	LA SIERRA AVE & HOLE AVE CURB RETURN
12	63°26'43"	80.00'	88.59'	49.45'	PIERCE AVE & HOLE AVE CURB RETURN
13	15°41'26"	712.00'	194.98'	98.11'	N'LY CURB
14	42°56'26"	35.00'	26.23'	13.77'	HOLE AVE & WELLS AVE CURB RETURN
15	177°53'24"	2.80'	8.69'	152.05'	MEDIAN NOSE
16	03°06'12"	1610.00'	87.20'	43.61'	RIGHT MEDIAN CURB
17	05°12'48"	250.00'	22.75'	11.38'	LEFT MEDIAN CURB
18	12°40'34"	185.00'	40.93'	20.55'	LEFT MEDIAN CURB
19	05°05'27"	320.00'	28.43'	14.23'	RIGHT MEDIAN CURB
20	09°27'42"	185.00'	30.55'	15.31'	LEFT MEDIAN CURB
21	07°07'30"	320.00'	39.79'	19.92'	RIGHT MEDIAN CURB
22	180°00'00"	2.00'	6.28'	0.00'	MEDIAN NOSE

CURVE DATA TABLE					
◇	DELTA	RADIUS	LENGTH	TANGENT	REMARK
23	180°00'00"	2.00'	6.28'	0.00'	MEDIAN NOSE
24	12°40'49"	189.00'	41.83'	21.00'	LEFT MEDIAN CURB
25	12°40'49"	185.00'	40.94'	20.56'	RIGHT MEDIAN CURB
26	12°40'49"	185.00'	40.94'	20.56'	RIGHT MEDIAN CURB
27	12°40'49"	181.00'	40.06'	20.11'	LEFT MEDIAN CURB
28	180°00'00"	2.00'	6.28'	0.00'	MEDIAN NOSE
29	154°36'46"	4.00'	10.79'	17.76'	MEDIAN NOSE
30	118°24'40"	4.00'	8.27'	6.71'	MEDIAN NOSE
31	121°49'40"	3.00'	6.38'	5.39'	MEDIAN NOSE
32	34°51'06"	90.00'	54.74'	28.25'	RIGHT MEDIAN CURB
33	40°28'37"	700.00'	494.52'	258.08'	HOLE/PIERCE CONSTRUCTION CENTERLINE
34	41°55'41"	30.00'	21.87'	11.44'	STORM DRAIN LINE A-2
35	71°18'42"	25.00'	31.12'	17.94'	BUSHNELL AVE & BOGART AVE CURB RETURN
36	14°59'58"	115.00'	30.11	15.14'	N'LY CURB
37	209°59'56"	36.00'	131.95'	0.00'	BUSHNELL CUL DE SAC
38	14°59'59"	115.00'	30.11	15.14'	S'LY CURB
39	150°00'00"	1.00'	2.62'	3.73	MEDIAN NOSE
40	22°24'06"	30.00'	11.73'	5.94'	RIGHT MEDIAN CURB
41	165°00'00"	1.00'	2.88'	7.60'	MEDIAN NOSE
42	17°20'12"	30.00'	9.08'	4.57'	LEFT MEDIAN CURB
43	36°50'03"	43.00'	27.64'	14.32'	FACE OF LANDSCAPE WALL
44	51°58'01"	30.00'	27.21'	14.61'	STORM DRAIN LINE A-3

BENCHMARK F2-N3

P.K NAIL AND CITY ENGINEER TAG IN THE NORTHERLY CURB OF PIERCE STREET MIDWAY BETWEEN ROSE AVENUE AND HOLLYHOCK LANE.

ELEVATION: 723.297

ENGINEER IN RESPONSIBLE CHARGE

EDWARD LARA
R.C.E. No. 63753 expires 9/30/10
DATE July 26, 2010

REGISTERED PROFESSIONAL ENGINEER EDWARD LARA No. 63753 Exp. 9-30-10 CIVIL STATE OF CALIFORNIA

MARK	REVISIONS	APPR.	DATE
3	CLARIFY STRUCTURAL SECTIONS	E.L.	4/22/10
2	REVISED STORM DRAIN ALIGNMENT	E.L.	11/10/10
1	REVISED CONCRETE SWALE PER RFI	E.L.	8/10/10

DESIGNED BY LLM DRAWN BY LLM CHECKED BY F.L.

APPROVED BY	BY	DATE
PRINCIPAL ENGINEER		7-28-10
CONSTRUCTION ADMIN.		
SURVEYOR		7-27-10
STREET SERVICES		7-28-10
TRAFFIC ENGINEER		7-28-10
Landscapes		7-28-10

CITY OF RIVERSIDE, CALIFORNIA
PUBLIC WORKS DEPARTMENT

APPROVED BY
CITY ENGINEER
DATE 7/28/10

STREET IMPROVEMENTS AT FIVE-POINT

TYPICAL SECTIONS

HORIZ. SCALE: N/A VERT. SCALE: N/A

DESIGN WORK ORDER. NO. 0704839
CONSTR. WORK ORDER. NO. 1101889

R-4019

SHEET 2 OF 10

FILE NO.

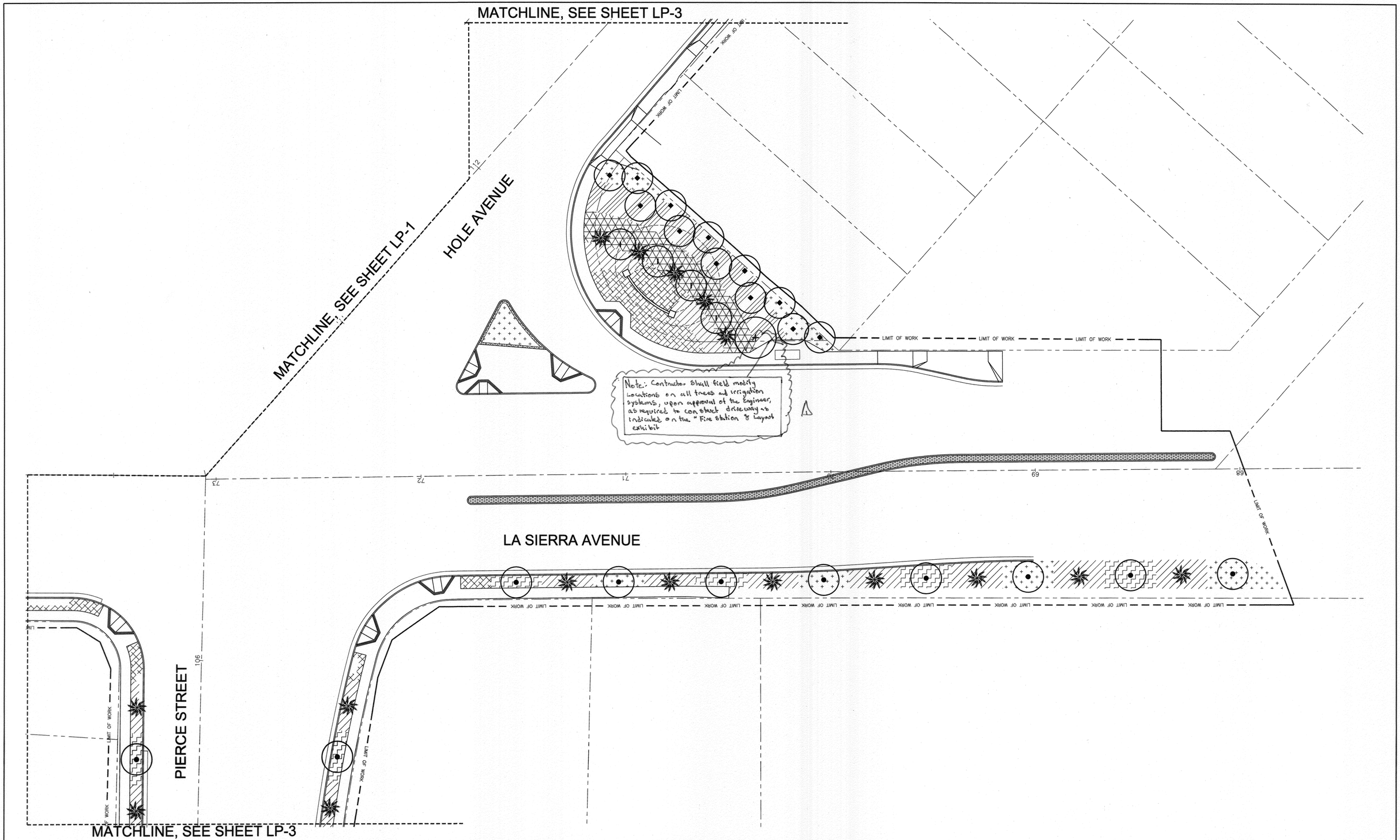

NORTH

REGISTERED LANDSCAPE ARCHITECT
TAMMY I. MALONEY NO. 2110
Signature 10/31/11
Renewal Date 7/20/10
Date
STATE OF CALIFORNIA

COMMUNITY WORKS DESIGN GROUP
4649 Brockton Avenue
Riverside, CA 92501
(951) 369-0700
Fax: (951) 369-4039
www.comworksdg.com

BENCHMARK G3-F2

P.K NAIL AND CITY ENGINEER TAG IN THE NORTHERLY CURB OF PIERCE STREET MIDWAY BETWEEN ROSE AVENUE AND HOLLYHOCK LANE.

ELEVATION: 723.297

ENGINEER IN RESPONSIBLE CHARGE
EDWARD LARA
R.C.E. No. 63753 expires 9/30/10
DATE July 26, 2010

REGISTERED PROFESSIONAL ENGINEER
EDWARD LARA
No. 63753
Exp. 9-30-10
CIVIL
STATE OF CALIFORNIA

MARK	REVISIONS	APPR.	DATE
1	Revised LS/IRR per Addn No. 2	EL	8/19/10

DESIGNED BY TIM DRAWN BY KCK CHECKED BY TIM

APPROVED BY	BY	DATE
PRINCIPAL ENGINEER	[illegible]	7/28/10
CONSTRUCTION ADMIN.		
SURVEYOR		
STREET SERVICES	[illegible]	7.28.10
TRAFFIC ENGINEER	[illegible]	7.28.10
Landscape	[illegible]	7.28.10

CITY OF RIVERSIDE, CALIFORNIA
PUBLIC WORKS DEPARTMENT

APPROVED BY
CONSTRUCTION ADMINISTRATION
CITY ENGINEER
7/28/10
DATE

STREET IMPROVEMENTS AT FIVE-POINT
LANDSCAPE & PLANTING PLANS
LP-2 PLANTING PLAN
HORIZ. SCALE: 1"=20'

DESIGN WORK ORDER. NO. 0704839
CONSTR. WORK ORDER. NO. 1101889

R-4019L

SHEET 8 OF 10

JOB NUMBER: 100513

PLANTING LEGEND:

	BOTANIC NAME	COMMON NAME	SIZE / SPACING	DETAIL
TREES	CERCIS CANADENSIS	EASTERN REDBUD	36" BOX	PER SPECS
	LAGERSTROEMIA INDICA 'WATERMELON RED'	RED CRAPE MYRTLE	36" BOX STD.	PER SPECS
	MELALEUCA LEUCADENDRON	CAJEPUT TREE	36" BOX	PER SPECS
	PODOCARPUS GRACILIOR	FERN PINE	36" BOX	PER SPECS
	WASHINGTONIA ROBUSTA	MEXICAN FAN PALM	12' B.T.H.	PER SPECS
	RELOCATED MEMORIAL TREE			
GROUNDCOVERS	ANIGOZANTHOS 'BUSH PEARL'	DWARF PINK KANGAROO PAW	1 GAL @ 24" O..C	'B'&'C', LP-4
	CALLISTEMON 'LITTLE JOHN'	DWARF BOTTLEBRUSH	1 GAL @ 30" O.C.	'B'&'C', LP-4
	CISTUS PURPUREUS	ORCHID ROCKROSE	5 GAL @ 48" O.C.	'B'&'C', LP-4
	KNIPHOFIA TRIANGULARIS 'ORANGE FLAME'	RED HOT POKER	1 GAL @ 24" O.C.	'B'&'C', LP-4
	MUHLENBERGIA CAPILLARIS	PINK MUHLY	1 GAL @ 36" O.C.	'B'&'C', LP-4
	PELARGONIUM PELTATUM 'RED'	IVY GERANIUM	1 GAL @ 18" O.C.	'B'&'C', LP-4
	VERBENA RIGIDA 'PINK'	SANDPAPER VERBENA	1 GAL @ 36" O.C.	'B'&'C', LP-4

NOTES:
1. ALL TREES WITHIN 5' OF HARDSCAPE TO RECEIVE ROOTBARRIER PER DETAIL 'A', SHEET LP-4
2. ALL PLANTER AREAS TO RECEIVE A 3" MINIMUM DEPTH LAYER OF SHREDDED FOREST BARK MULCH

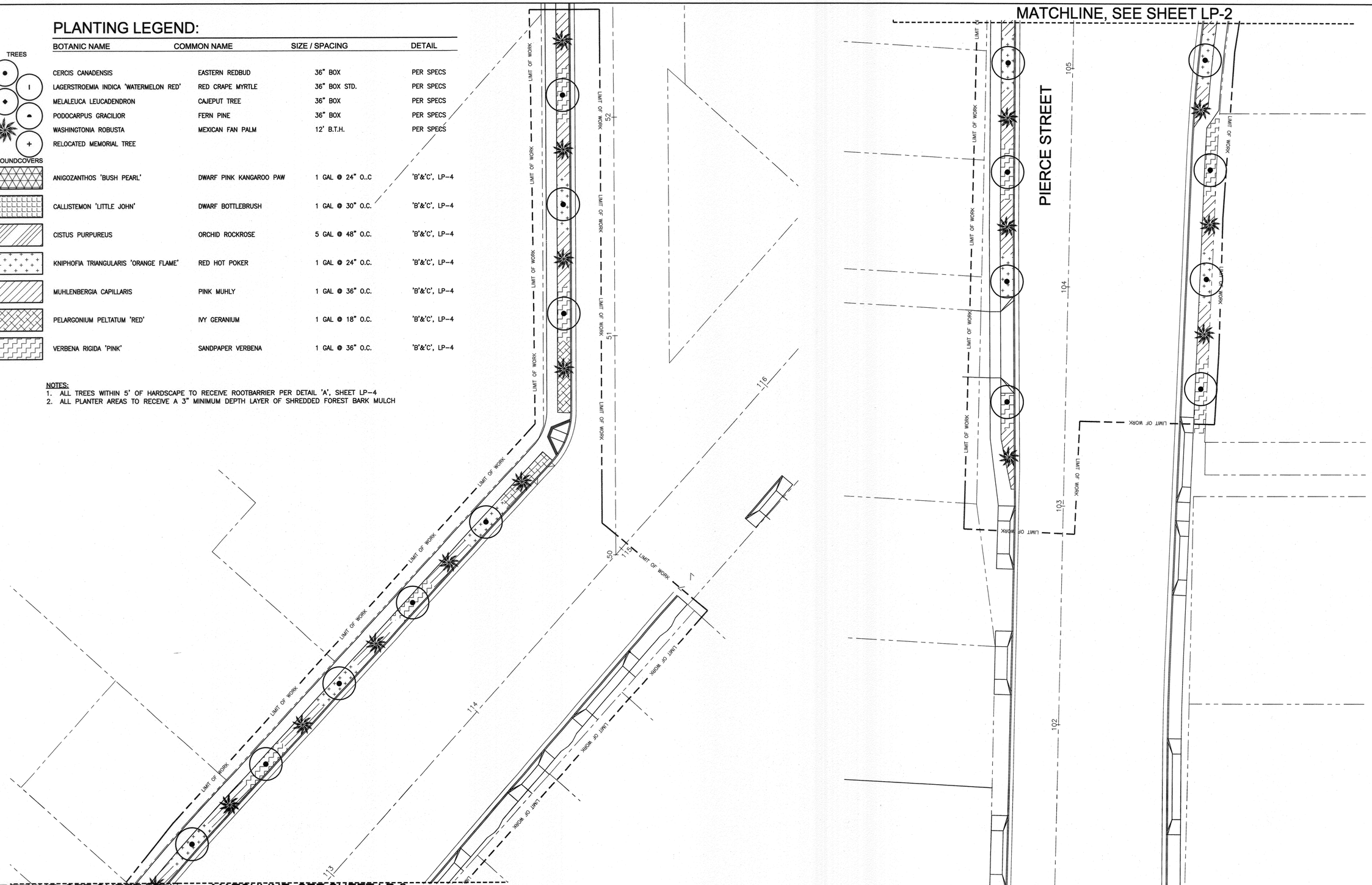

NORTH

REGISTERED LANDSCAPE ARCHITECT
TIMOTHY L. MALONEY NO. 2110
Signature
10/31/11
Renewal Date
7/20/10
Date
STATE OF CALIFORNIA

COMWORKS DESIGN GROUP
4649 Brockton Avenue
Riverside, CA 92501
(951) 369-0700
Fax: (951) 369-4039
www.comworksdg.com

BENCHMARK G3-F2

P.K NAIL AND CITY ENGINEER TAG IN THE NORTHERLY CURB OF PIERCE STREET MIDWAY BETWEEN ROSE AVENUE AND HOLLYHOCK LANE.

ELEVATION: 723.297

ENGINEER IN RESPONSIBLE CHARGE
EDWARD LARA
R.C.E. No. 63753 expires 9/30/10
DATE July 26, 2010

REGISTERED PROFESSIONAL ENGINEER
EDWARD LARA
No. 63753
Exp. 9-30-10
CIVIL
STATE OF CALIFORNIA

MARK	REVISIONS	APPR.	DATE

DESIGNED BY TIM DRAWN BY KCK CHECKED BY TIM

APPROVED BY	BY	DATE
PRINCIPAL ENGINEER	DH	7/28/10
CONSTRUCTION ADMIN.		
SURVEYOR		
STREET SERVICES	JAL	7-29-10
TRAFFIC ENGINEER	S.H.	7-27-10
Landscape	JB	7-28-10

CITY OF RIVERSIDE, CALIFORNIA
PUBLIC WORKS DEPARTMENT

APPROVED BY
~~CONSTRUCTION ADMINISTRATION~~
CITY ENGINEER
7/28/10
DATE

STREET IMPROVEMENTS AT FIVE-POINT
LANDSCAPE & PLANTING PLANS
LP-3 PLANTING PLAN

HORIZ. SCALE: 1"=20'

DESIGN WORK ORDER. NO. 0704839
CONSTR. WORK ORDER. NO. 1101889

R-4019L

SHEET 9 OF 10

JOB NUMBER: 100513

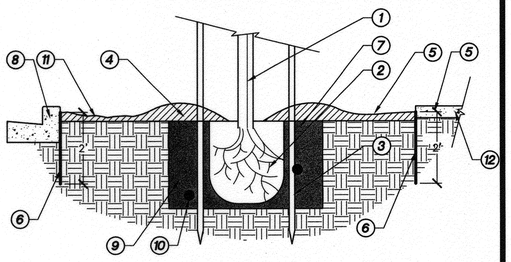

1. TREE PER PLANTING PLAN
2. ROOTBALL
3. STAKE PER 'TREE PLANTING' DETAIL
4. EARTH WATERING BASIN PER 'TREE PLANTING' DETAIL
5. FINISH GRADE
6. DEEP ROOT BARRIER AT EDGE OF HARDSCAPE – 24" DEEP, 10' LONG CENTERED ON TRUNK
7. TREE PLANTING PIT
8. STREET CURB PER STREET IMPROVEMENT PLANS
9. COMPACTED BACKFILL MIX PER PLANTING SPECS / NOTES
10. PLANT TABLETS PER PLANTING SPECS / NOTES
11. WOOD MULCH – DEPTH PER PLANTING PLAN
12. CONCRETE PAVING PER PLAN

NOTES:
1. ROOTBARRIER TO EXTEND 5' TO EITHER SIDE OF TREE TRUNK
2. ROOTBARRIER SHALL NOT ENCIRCLE THE TREE ROOTBALL

A Linear Root Barrier

SCALE: N.T.S.

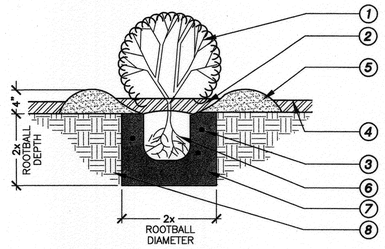

1. SHRUB PER PLANTING PLAN
2. WOOD MULCH– DEPTH PER PLANTING PLAN
3. PLANT TABLETS PER PLANTING SPECS / NOTES
4. FINISH GRADE
5. EARTH WATERING BASIN (RAKE SMOOTH PRIOR TO PLANTING GROUNDCOVER)
6. ROOTBALL: SET CROWN SLIGHTLY ABOVE FINISH GRADE
7. COMPACT BACKFILL MIX PER PLANTING SPECS / NOTES
8. NATIVE SOIL

B Shrub Planting

SCALE: N.T.S.

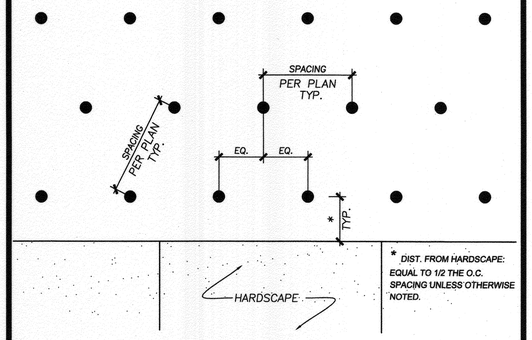

* DIST. FROM HARDSCAPE: EQUAL TO 1/2 THE O.C. SPACING UNLESS OTHERWISE NOTED.

C Groundcover Spacing

SCALE: N.T.S.

D

E

F

G

H

REGISTERED LANDSCAPE ARCHITECT
TIMOTHY L. MALONEY NO. 2119
Signature
10/31/11
Renewal Date
7/20/10
Date
STATE OF CALIFORNIA

DESIGN GROUP
4649 Brockton Avenue
Riverside, CA 92501
(951) 369-0700
Fax: (951) 369-4039
www.comworksdg.com

BENCHMARK G3-F2

P.K NAIL AND CITY ENGINEER TAG IN THE NORTHERLY CURB OF PIERCE STREET MIDWAY BETWEEN ROSE AVENUE AND HOLLYHOCK LANE.

ELEVATION: 723.297

CITY OF RIVERSIDE

ENGINEER IN RESPONSIBLE CHARGE

EDWARD LARA
R.C.E. No. 63753 expires 9/30/10
DATE July 26, 2010

REGISTERED PROFESSIONAL ENGINEER
EDWARD LARA
No. 63753
Exp. 9-30-10
CIVIL
STATE OF CALIFORNIA

MARK	REVISIONS	APPR.	DATE

DESIGNED BY TIM DRAWN BY KCK CHECKED BY TIM

APPROVED BY	BY	DATE
PRINCIPAL ENGINEER	DK	7/23/10
CONSTRUCTION ADMIN.		
SURVEYOR		
STREET SERVICES		7-23-10
TRAFFIC ENGINEER		7-23-10
Landscape		7-28-10

CITY OF RIVERSIDE, CALIFORNIA
PUBLIC WORKS DEPARTMENT

APPROVED BY

~~CONSTRUCTION ADMINISTRATION~~
CITY ENGINEER

2/23/11
DATE

STREET IMPROVEMENTS AT FIVE-POINT

LANDSCAPE & PLANTING PLANS
LP-4 PLANTING DETAILS

HORIZ. SCALE: N.T.S.

DESIGN WORK ORDER. NO. 0704839
CONSTR. WORK ORDER. NO. 1101889

R-4019L

SHEET 10 OF 10

JOB NUMBER: 100513

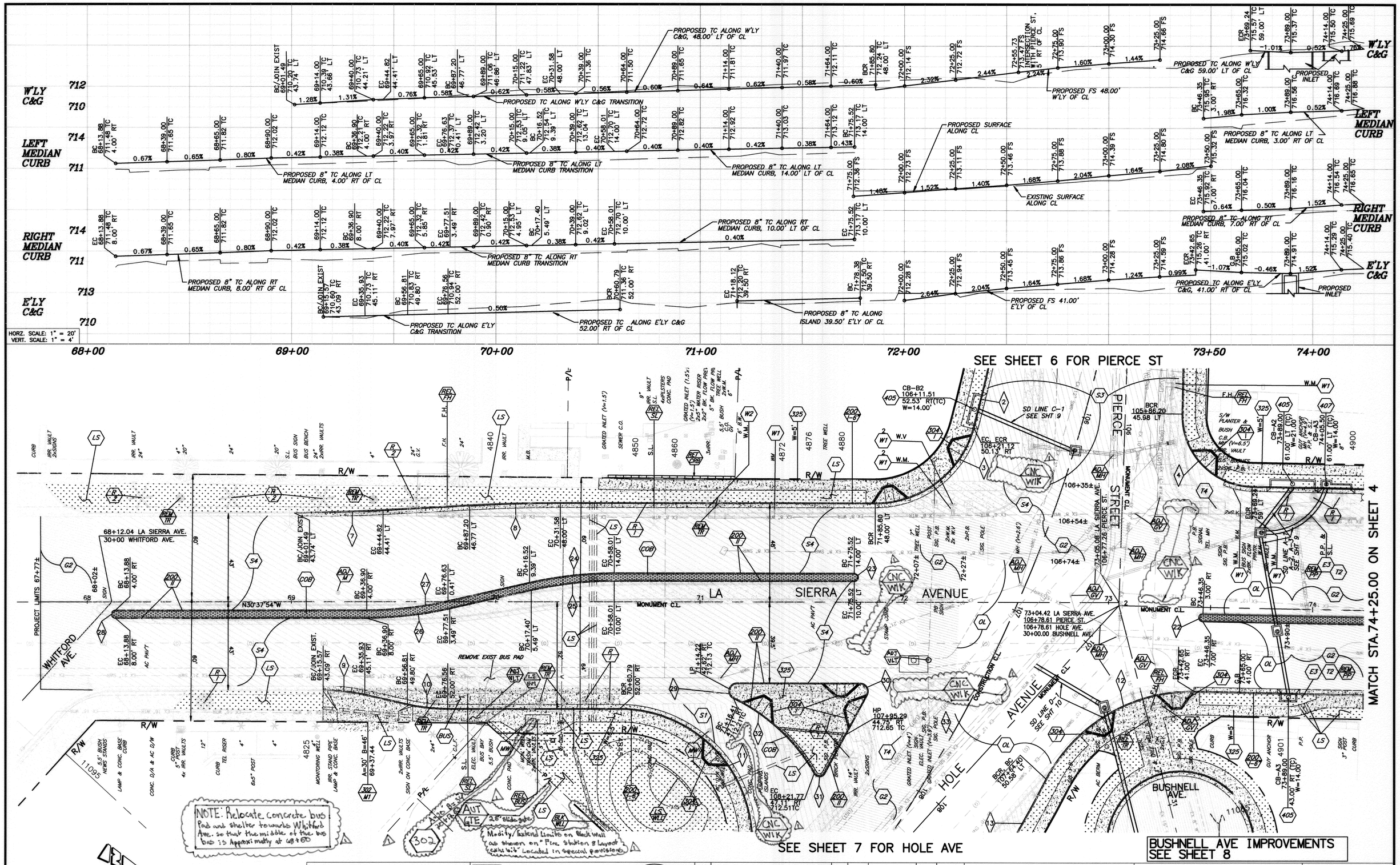

BENCHMARK F2-N3

P.K NAIL AND CITY ENGINEER TAG IN THE NORTHERLY CURB OF PIERCE STREET MIDWAY BETWEEN ROSE AVENUE AND HOLLYHOCK LANE.

ELEVATION: 723.297

ENGINEER IN RESPONSIBLE CHARGE

EDWARD LARA
R.C.E. No. 63753 expires 9/30/10
DATE July 26, 2010

REGISTERED PROFESSIONAL ENGINEER EDWARD LARA No. 63753 Exp. 9-30-10 CIVIL STATE OF CALIFORNIA

MARK	REVISIONS	APPR.	DATE
A	Bushnell improvements per addendum No. 2	EL	8/19/10

DESIGNED BY LA DRAWN BY LA CHECKED BY EL

APPROVED BY	BY	DATE
PRINCIPAL ENGINEER	DH	7/28/10
CONSTRUCTION ADMIN.		
SURVEYOR	CS	7/28/10
STREET SERVICES	JGR	7-28-10
TRAFFIC ENGINEER	D.H.	7-28-10
Landscape	JB	7-28-10

CITY OF RIVERSIDE, CALIFORNIA
PUBLIC WORKS DEPARTMENT

APPROVED BY
CITY ENGINEER
DATE 7/28/10

STREET IMPROVEMENTS AT FIVE-POINT

LA SIERRA AVENUE

HORIZ. SCALE: 1"=20' VERT. SCALE: 1"=4'

DESIGN WORK ORDER. NO. 0704839
CONSTR. WORK ORDER. NO. 1101889

R-4019

SHEET 3 OF 10

FILE NO.

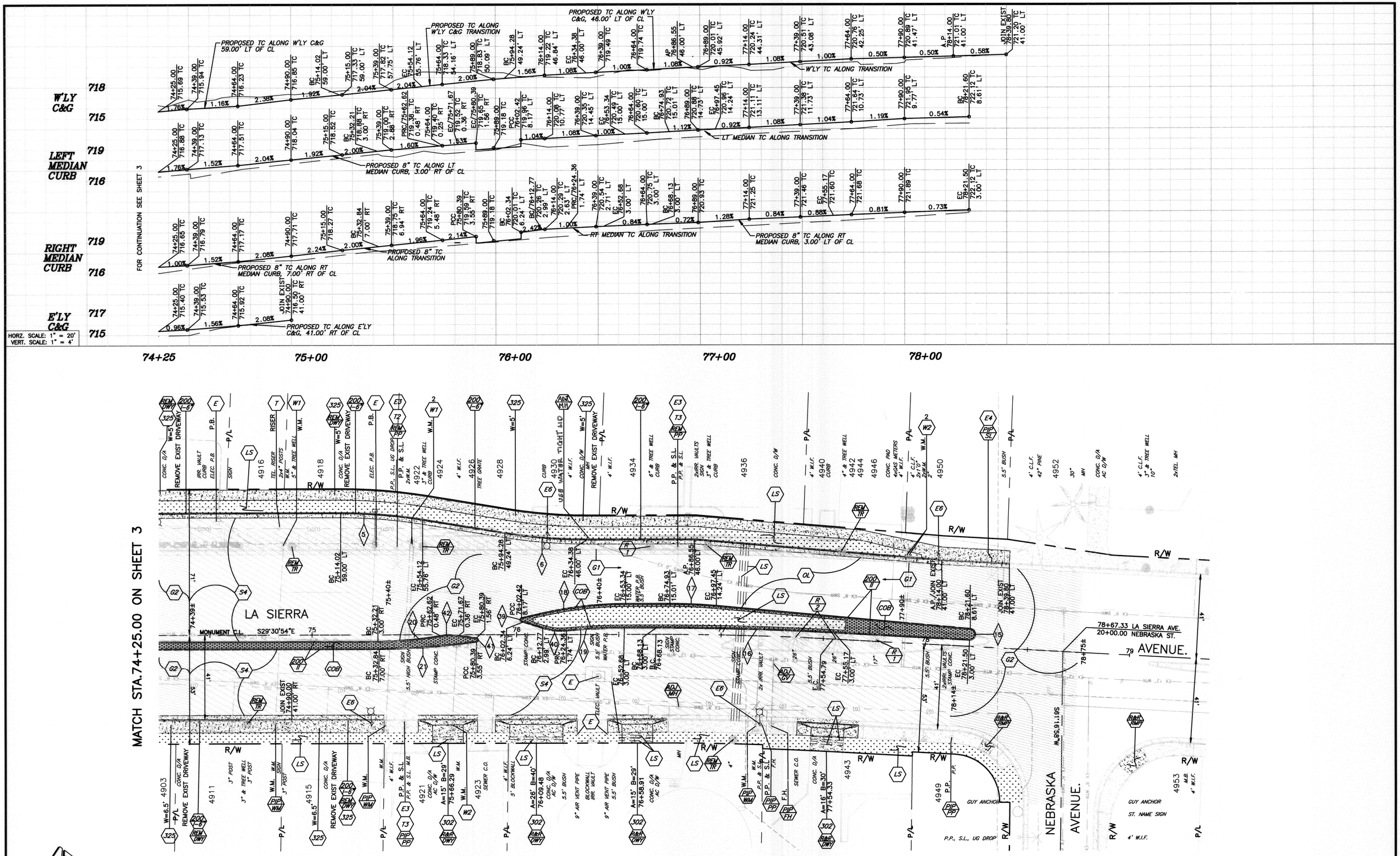

BENCHMARK F2-N3

P.K NAIL AND CITY ENGINEER TAG IN THE NORTHERLY CURB OF PIERCE STREET MIDWAY BETWEEN ROSE AVENUE AND HOLLYHOCK LANE.

ELEVATION: 723.297

ENGINEER IN RESPONSIBLE CHARGE

EDWARD LARA
R.C.E. No. 63753 expires 9/30/10
DATE July 26, 2010

REGISTERED PROFESSIONAL ENGINEER EDWARD LARA No. 63753 Exp. 9-30-10 CIVIL STATE OF CALIFORNIA

MARK	REVISIONS	APPR.	DATE

DESIGNED BY LA DRAWN BY LA CHECKED BY FL

APPROVED BY	BY	DATE
PRINCIPAL ENGINEER		7/23/10
CONSTRUCTION ADMIN.		
SURVEYOR		7/23/10
STREET SERVICES		7-23-10
TRAFFIC ENGINEER		7-23-10
Landscape		7-23-10

CITY OF RIVERSIDE, CALIFORNIA
PUBLIC WORKS DEPARTMENT

APPROVED BY

CITY ENGINEER

DATE 7/23/10

STREET IMPROVEMENTS AT FIVE-POINT

LA SIERRA AVENUE

HORIZ. SCALE: 1"=20' VERT. SCALE: 1"=4'

DESIGN WORK ORDER. NO. 0704839
CONSTR. WORK ORDER. NO. 1101889

R-4019

SHEET 4 OF 10

FILE NO.

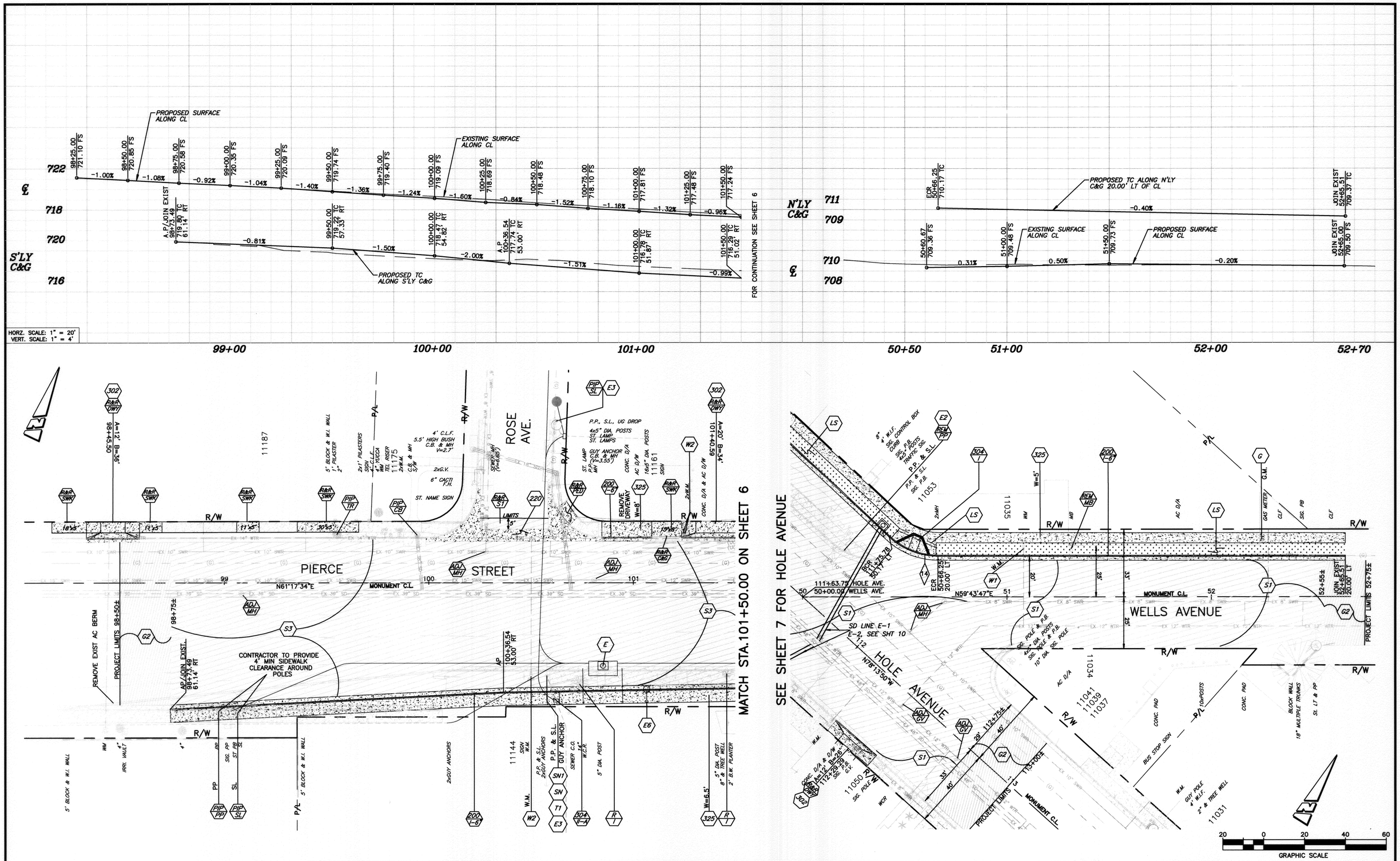

BENCHMARK F2-N3

P.K NAIL AND CITY ENGINEER TAG IN THE NORTHERLY CURB OF PIERCE STREET MIDWAY BETWEEN ROSE AVENUE AND HOLLYHOCK LANE.

ELEVATION: 723.297

ENGINEER IN RESPONSIBLE CHARGE

Edward Lara

EDWARD LARA
R.C.E. No. 63753 expires 9/30/10
DATE July 26, 2010

REGISTERED PROFESSIONAL ENGINEER EDWARD LARA No. 63753 Exp. 9-30-10 CIVIL STATE OF CALIFORNIA

MARK	REVISIONS	APPR.	DATE

DESIGNED BY LA DRAWN BY LA CHECKED BY FL

APPROVED BY	BY	DATE
PRINCIPAL ENGINEER	DA	7/28/10
CONSTRUCTION ADMIN.		
SURVEYOR		7/23/10
STREET SERVICES		7-27-10
TRAFFIC ENGINEER		7-27-10
Landscape		7-28-10

CITY OF RIVERSIDE, CALIFORNIA
PUBLIC WORKS DEPARTMENT

APPROVED BY

CITY ENGINEER

DATE 7/28/10

STREET IMPROVEMENTS AT FIVE-POINT

PIERCE STREET WELLS AVENUE

HORIZ. SCALE: 1"=20' VERT. SCALE: 1"=4'

DESIGN WORK ORDER. NO. 0704839
CONSTR. WORK ORDER. NO. 1101889

R-4019

SHEET 5 OF 10

FILE NO.

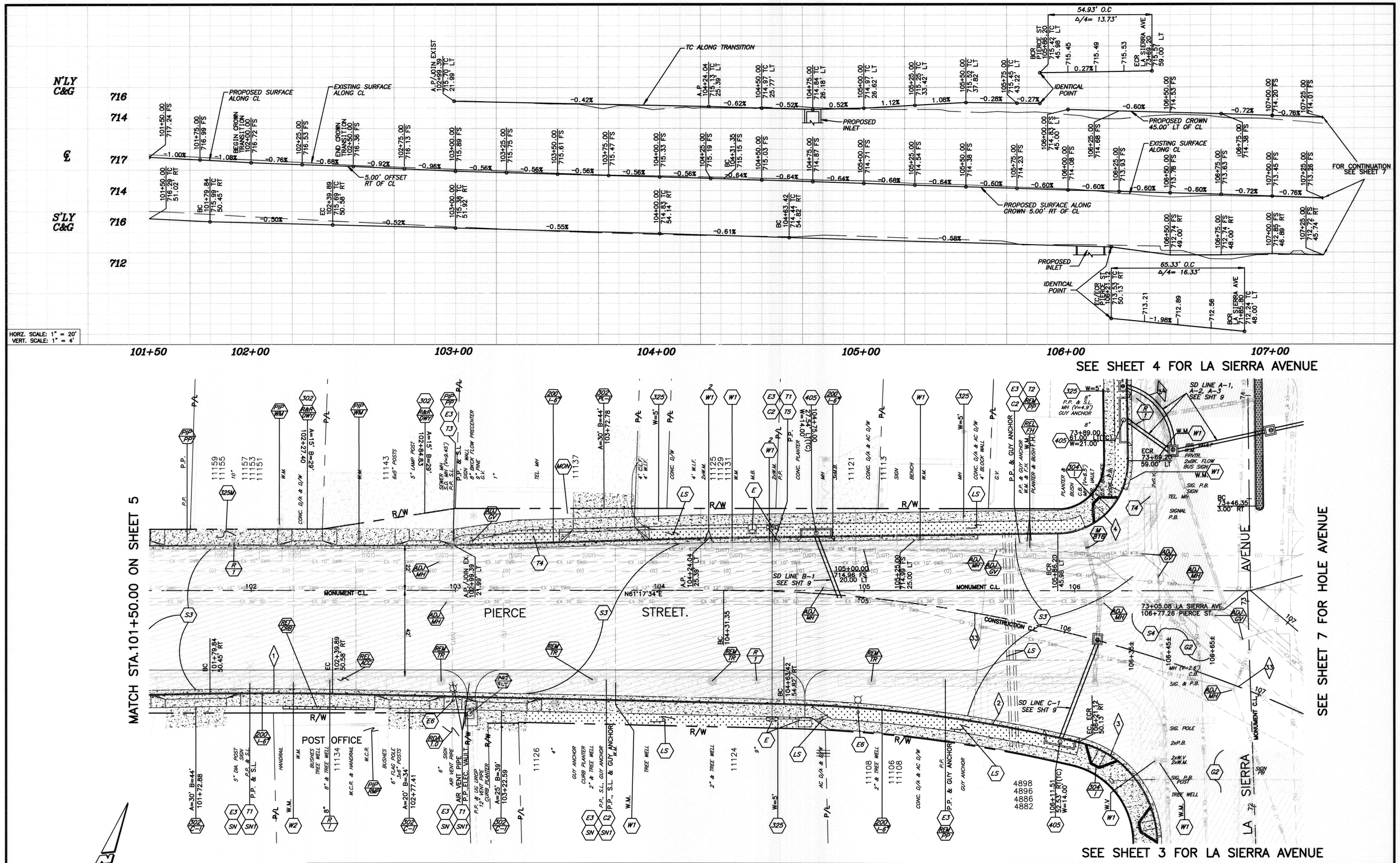

BENCHMARK F2-N3

P.K NAIL AND CITY ENGINEER TAG IN THE NORTHERLY CURB OF PIERCE STREET MIDWAY BETWEEN ROSE AVENUE AND HOLLYHOCK LANE.

ELEVATION: 723.297

ENGINEER IN RESPONSIBLE CHARGE

EDWARD LARA
R.C.E. No. 63753 expires 9/30/10
DATE July 26, 2010

REGISTERED PROFESSIONAL ENGINEER EDWARD LARA No. 63753 Exp. 9-30-10 CIVIL STATE OF CALIFORNIA

MARK	REVISIONS	APPR.	DATE

DESIGNED BY LA DRAWN BY LA CHECKED BY EL

APPROVED BY	BY	DATE
PRINCIPAL ENGINEER		7/28/10
CONSTRUCTION ADMIN.		
SURVEYOR		7/27/10
STREET SERVICES		7-29-10
TRAFFIC ENGINEER		7-27-10
Landscape		7-28-10

CITY OF RIVERSIDE, CALIFORNIA
PUBLIC WORKS DEPARTMENT

APPROVED BY
CITY ENGINEER
DATE 7/28/10

STREET IMPROVEMENTS AT FIVE-POINT

PIERCE STREET

HORIZ. SCALE: 1"=20' VERT. SCALE: 1"=4'

DESIGN WORK ORDER. NO. 0704839
CONSTR. WORK ORDER. NO. 1101889

R-4019

SHEET 6 OF 10

FILE NO.

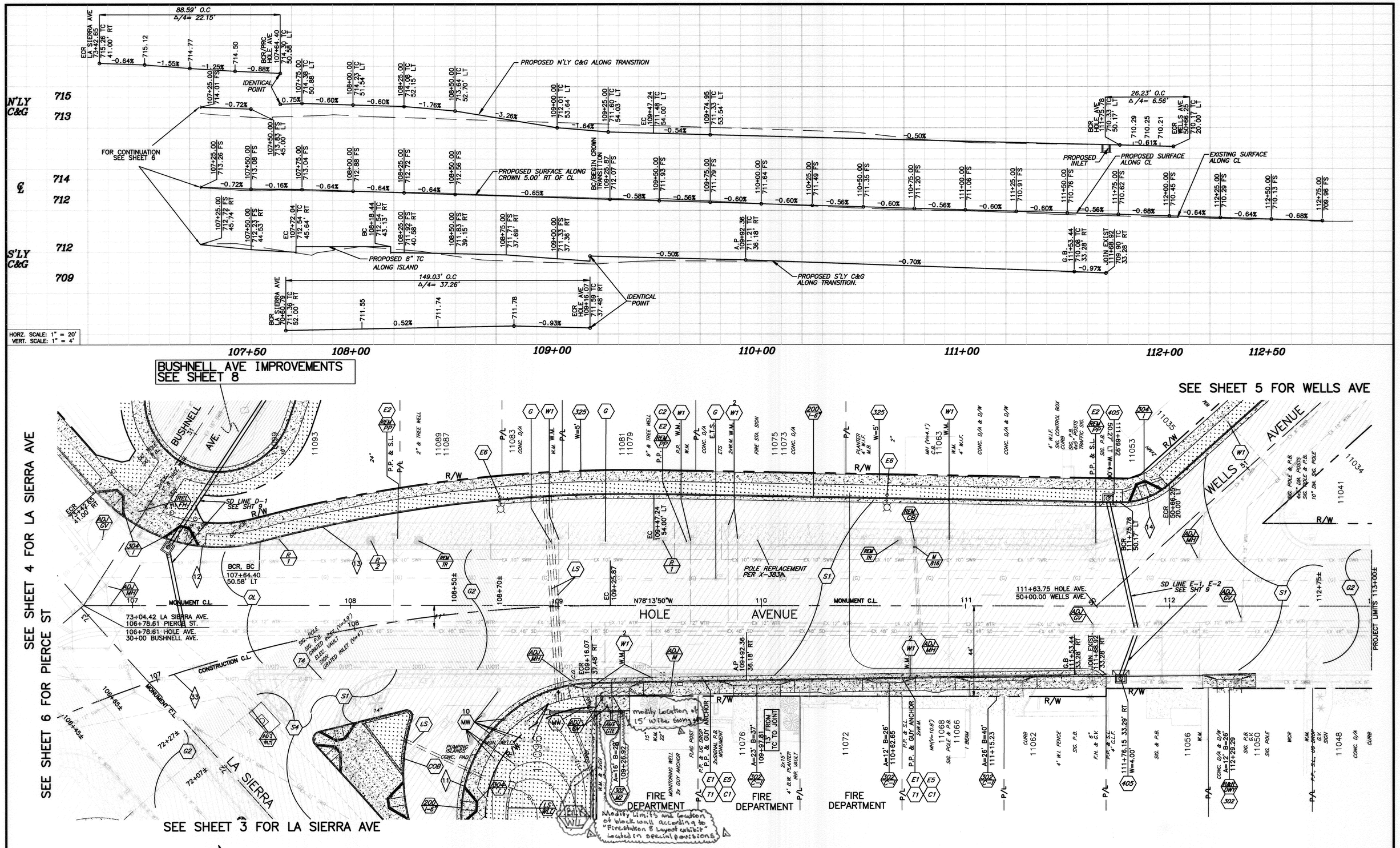

BENCHMARK F2-N3

P.K NAIL AND CITY ENGINEER TAG IN THE NORTHERLY CURB OF PIERCE STREET MIDWAY BETWEEN ROSE AVENUE AND HOLLYHOCK LANE.

ELEVATION: 723.297

ENGINEER IN RESPONSIBLE CHARGE

EDWARD LARA
R.C.E. No. 63753 expires 9/30/10
DATE July 26, 2010

REGISTERED PROFESSIONAL ENGINEER — EDWARD LARA — No. 63753 — Exp. 9-30-10 — CIVIL — STATE OF CALIFORNIA

MARK	REVISIONS	APPR.	DATE
1	Revised & Provided Improv. Added Note 2	E.L.	8/19/10

DESIGNED BY LA DRAWN BY LA CHECKED BY EL

APPROVED BY	BY	DATE
PRINCIPAL ENGINEER		7/28/10
CONSTRUCTION ADMIN.		
SURVEYOR		7/27/10
STREET SERVICES		7-27-10
TRAFFIC ENGINEER		7-27-10
Landscape		7-28-10

CITY OF RIVERSIDE, CALIFORNIA
PUBLIC WORKS DEPARTMENT

APPROVED BY
CITY ENGINEER
DATE 7/28/10

STREET IMPROVEMENTS AT FIVE-POINT

HOLE AVENUE

HORIZ. SCALE: VERT. SCALE:

DESIGN WORK ORDER. NO. 0704839
CONSTR. WORK ORDER. NO. 1101889

R-4019

SHEET 7 OF 10

FILE NO.

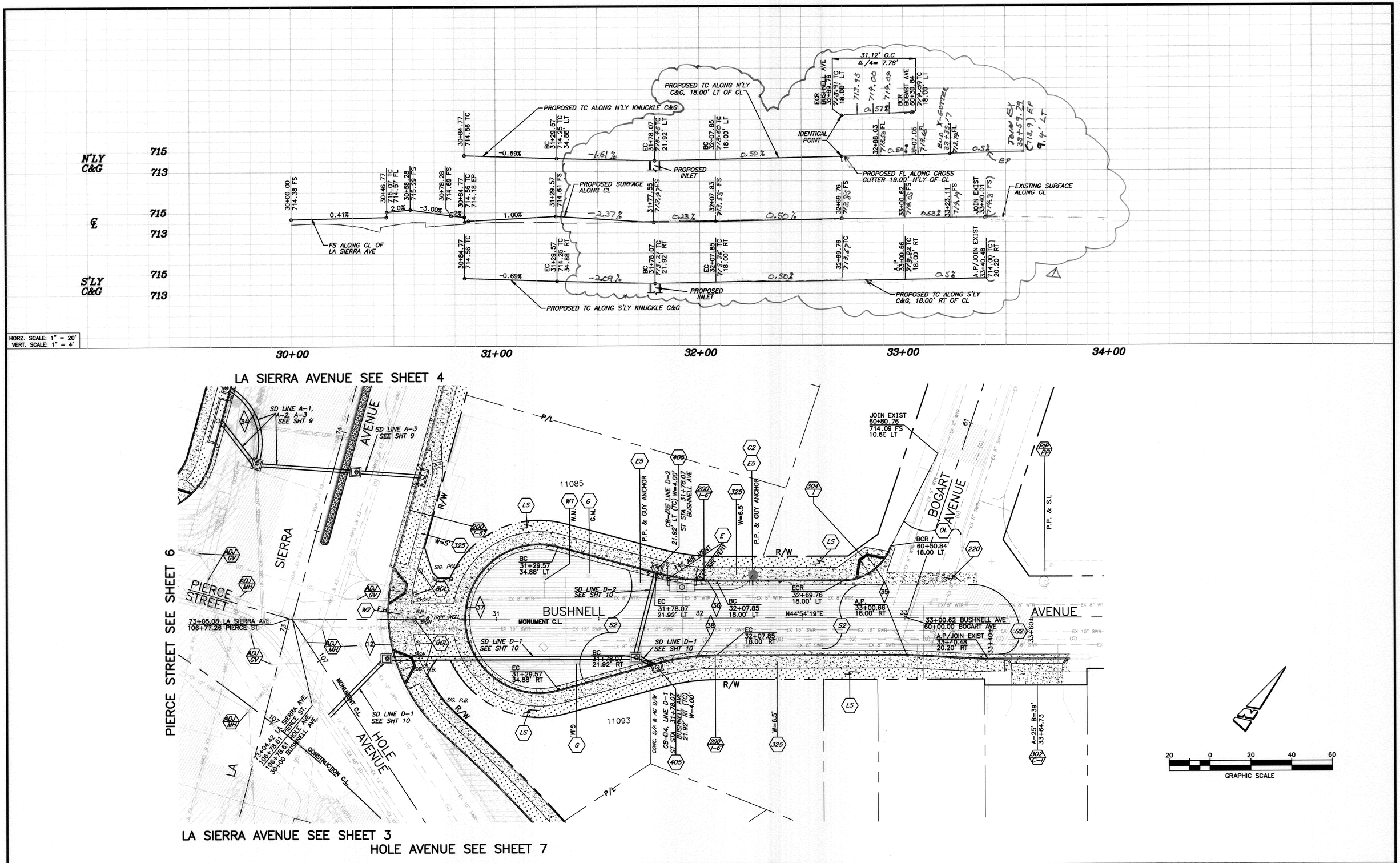

BENCHMARK F2-N3

P.K NAIL AND CITY ENGINEER TAG IN THE NORTHERLY CURB OF PIERCE STREET MIDWAY BETWEEN ROSE AVENUE AND HOLLYHOCK LANE.

ELEVATION: 723.297

ENGINEER IN RESPONSIBLE CHARGE

EDWARD LARA
R.C.E. No. 63753 expires 9/30/10
DATE July 26, 2010

REGISTERED PROFESSIONAL ENGINEER EDWARD LARA No. 63753 Exp. 9-30-10 CIVIL STATE OF CALIFORNIA

MARK	REVISIONS	APPR.	DATE
1	REVISED N'LY & S'LY TC, & ℄ Elevation	EL	12/7/10

DESIGNED BY LA DRAWN BY LA CHECKED BY EL

APPROVED BY	BY	DATE
PRINCIPAL ENGINEER		7/28/10
CONSTRUCTION ADMIN.		
SURVEYOR		7/27/10
STREET SERVICES		7-29-10
TRAFFIC ENGINEER		7-23-10
Landscape		7-28-10

CITY OF RIVERSIDE, CALIFORNIA
PUBLIC WORKS DEPARTMENT

APPROVED BY
CITY ENGINEER
DATE 7/28/10

STREET IMPROVEMENTS AT FIVE-POINT

BUSHNELL AVENUE

HORIZ. SCALE: 1"=20' VERT. SCALE: 1"=4'

DESIGN WORK ORDER. NO. 0704839
CONSTR. WORK ORDER. NO. 1101889

R-4019

SHEET 8 OF 10

FILE NO.

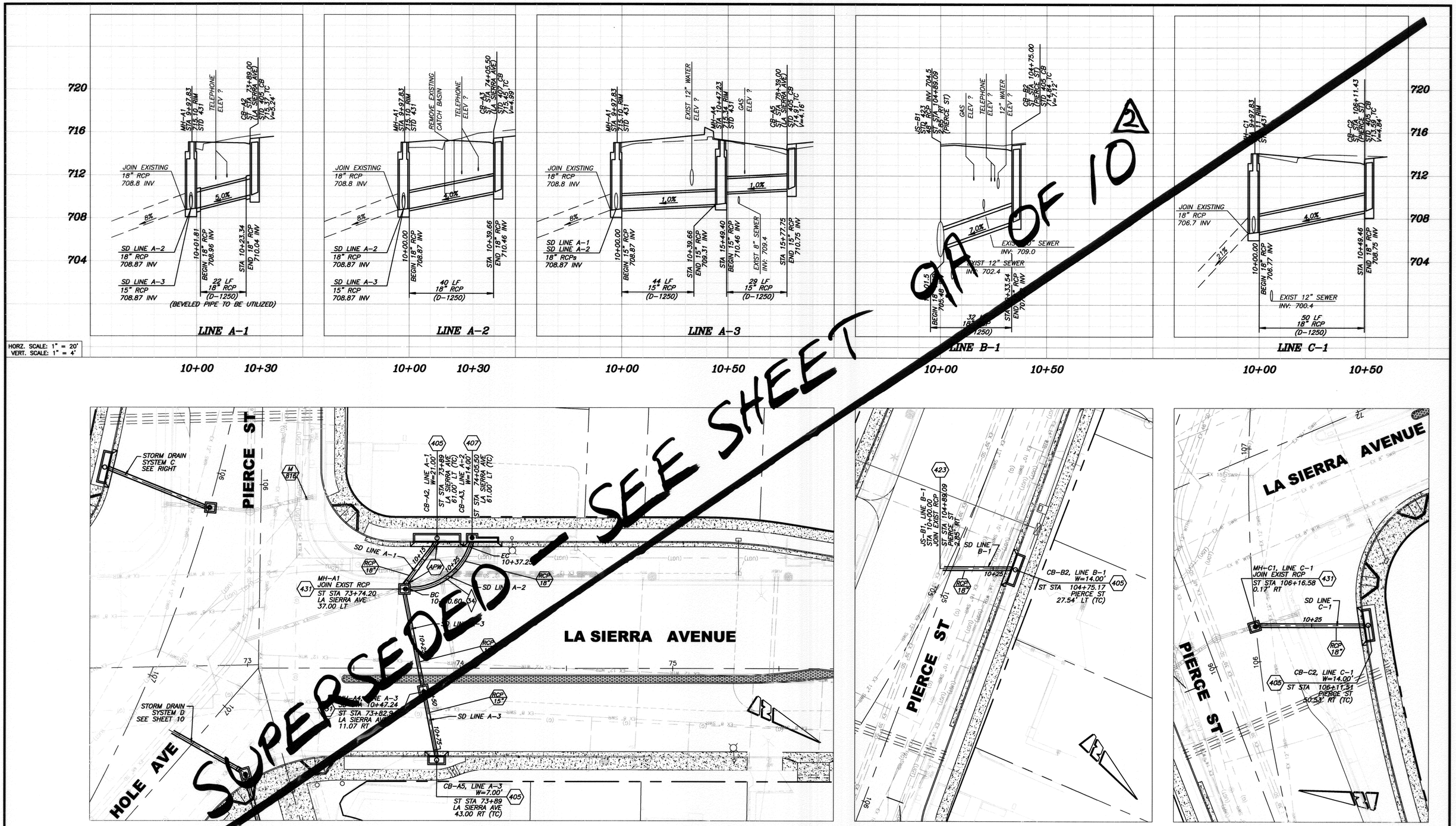

NOTE: ALL UTILITIES SHALL BE LOCATED PRIOR TO CONSTURCTION OF ANY STORM FACILITIES. POTHOLED ELEVATIONS SHALL BE PROVIDED TO THE ENGINEER AND THE ENGINEER MAY PROVIDE A MODIFIED PLAN, IF NECESSARY.

Note: Minimum of 1' clearance shall be provided between any existing waterline and proposed storm drain line.

GRAPHIC SCALE 0 20 40 60

BENCHMARK F2-N3

P.K NAIL AND CITY ENGINEER TAG IN THE NORTHERLY CURB OF PIERCE STREET MIDWAY BETWEEN ROSE AVENUE AND HOLLYHOCK LANE.

ELEVATION: 723.297

ENGINEER IN RESPONSIBLE CHARGE

EDWARD LARA
R.C.E. No. 63753 expires 9/30/10
DATE July 26, 2010

REGISTERED PROFESSIONAL ENGINEER EDWARD LARA No. 63753 Exp. 9-30-10 CIVIL STATE OF CALIFORNIA

MARK	REVISIONS	APPR.	DATE
2	REVISED SD & REPLACED w/ SHT 9A	E.L.	11/9/10
1	Added Note, per Addend No. 2	E.L.	8/19/10

DESIGNED BY LA DRAWN BY LA CHECKED BY FL

APPROVED BY	BY	DATE
PRINCIPAL ENGINEER		7/23/10
CONSTRUCTION ADMIN.		
SURVEYOR		7/23/10
STREET SERVICES		7-29-10
TRAFFIC ENGINEER		7-27-10
Landscape		7-28-10

CITY OF RIVERSIDE, CALIFORNIA
PUBLIC WORKS DEPARTMENT

APPROVED BY
CITY ENGINEER
DATE 7/28/10

STREET IMPROVEMENTS AT FIVE-POINT

STORM DRAIN SYSTEM A
STORM DRAIN SYSTEM B
STORM DRAIN SYSTEM C

HORIZ. SCALE: VERT. SCALE:

DESIGN WORK ORDER. NO. 0704839
CONSTR. WORK ORDER. NO. 1101889

R-4019

SHEET 9 OF 10

FILE NO.