RIVERSIDE CALIFORNIA

PUBLIC WORKS DEPARTMENT

IOWA AVENUE GRADE SEPARATION AT BNSF RAILROAD

BURLINGTON NORTHERN SANTA FE RAILROAD SAN BERNARDINO SUBDIVISION - MP 7.30

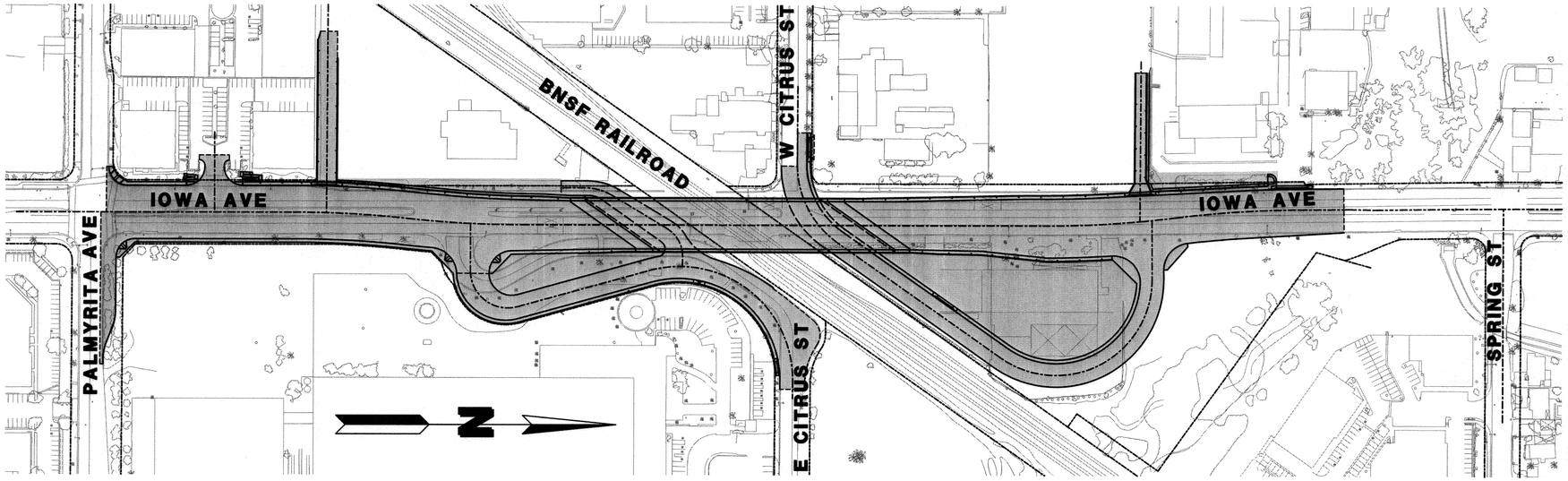

PROJECT LOCATION MAP

NOT TO SCALE

GENERAL CONSTRUCTION NOTES

1. UTILITY LINES SHOWN ARE BASED UPON A SEARCH OF AVAILABLE RECORDS. THERE IS NO ASSURANCE THAT THE LOCATION OF SUBSTRUCTURES SHOWN ARE ACCURATE. PRIOR TO ANY EXCAVATION WORK, THE CONTRACTOR SHALL NOTIFY UNDERGROUND SERVICE ALERT OF SOUTHERN CALIFORNIA (DIG ALERT) TO MARK THE LOCATION OF ALL SUBSTRUCTURES, WHETHER SHOWN OR NOT ON THESE DRAWINGS, AT LEAST 48 HOURS PRIOR TO THE COMMENCEMENT OF FIELD MARKING. THE CONTRACTOR SHALL USE PRECAUTION WHEN EXCAVATING. SUBSTRUCTURES ENCOUNTERED SHALL BE EXPOSED AND THE ENGINEER NOTIFIED OF THEIR EXISTENCE. THE CONTRACTOR SHALL BE RESPONSIBLE FOR THE PROTECTION OF ALL SUBSTRUCTURES, WHETHER SHOWN OR NOT, ON THESE DRAWINGS. THE CONTRACTOR SHALL REPAIR, AT HIS/HER EXPENSE, ANY SUBSTRUCTURES DAMAGE CAUSED BY HIS/HER OPERATIONS.
2. ALL ELEVATIONS AND OFFSETS SHOWN ON THE PLANS SHALL BE STAKED IN THE FIELD, AND VERIFIED PRIOR TO CONSTRUCTION. ALL ELEVATIONS, OFFSETS, AND DIMENSIONS SHOWN FOR RETAINING WALLS AND DRIVEWAYS ON OR ADJACENT TO PRIVATE PROPERTY SHALL BE VERIFIED PRIOR TO CONSTRUCTION.
3. PRIME CONTRACTORS BIDDING THIS WORK SHALL HAVE A CLASS "A" LICENSE.
4. PRIOR TO ISSUANCE OF GRADE SHEETS FOR ANY PROPOSED SEWER OR STORM DRAIN FACILITIES, CONTRACTOR SHALL EXPOSE ALL UTILITIES WHICH CROSS OR MAY BE IN CONFLICT WITH THE PROPOSED SEWER AND STORM DRAIN FACILITIES AND COORDINATE WITH THE INSPECTOR TO HAVE THE LOCATION AND ELEVATION VERIFIED BY SURVEYOR.
5. CONTRACTOR TO GIVE CITY PUBLIC UTILITIES DEPARTMENTS AT LEAST FIVE (5) WORKING DAYS WRITTEN NOTICE PRIOR TO START OF ANY CONSTRUCTION.
6. ALL GRADING SLOPES SHALL BE 2:1 MAX UNLESS NOTED OTHERWISE.

ABBREVIATIONS

AP = ANGLE POINT
AV = AIRVAC
BNSF = BURLINGTON NORTHERN SANTA FE
BO= BLOWOFF
BOC= BACK OF CURB
BV = BUTTERFLY VALVE
BW = BACK OF SIDEWALK
CARV = COMB AIR RELEASE VALVE ASSY
CB = CATCH BASIN
C & G = CURB AND GUTTER
ELECT = ELECTRIC
EMH = ELECTRIC MANHOLE
EPB = ELECTRIC PULLBOX
EV = ELECTRIC VAULT
FDC = FIRE DEPARTMENT CONNECTION
FV = FIRE VALVE
GTV = GATE VALVE
GV = GAS VALVE
GVLT = GAS VAULT
INT = INTERSECTION
LP = LIGHT POLE
PP = POWER POLE
SDMH = STORM DRAIN MANHOLE
SL = STREET LIGHT
SMH = SEWER MANHOLE
SP = STEEL POLE
TD = TOP OF DIKE
TS = TRAFFIC SIGNAL
TSPB = TRAFFIC SIGNAL PULLBOX
TVLT = TELEPHONE VAULT
UG = UNDERGROUND
VAR = VARIES
WM = WATER METER
WMH = WATER MANHOLE
WVLT = WATER VAULT
WV = WATER VALVE

NOTE: ALL ABBREVIATIONS ON THE PLANS ARE PER THE CITY'S AND CALTRANS STANDARDS UNLESS OTHERWISE LISTED ABOVE.

THIS SHEET IS FOR SIGNATURE REFERENCE ONLY - PLEASE SEE THE REMAINING SHEETS FOR THE AS-BUILT PLANS BY OTHERS

Don't Dig...Until You Call U.S.A. Toll Free
1-800-227-2600
for the location of buried utility lines.
Don't disrupt vital services.
TWO WORKING DAYS BEFORE YOU DIG

PLANS PREPARED BY:
AECOM
901 VIA PIEMONTE, 5TH FLOOR
ONTARIO, CA 91764
(909) 579-3050

REGISTERED PROFESSIONAL ENGINEER JAMES M FAGAN No. 45668 Exp. 12-12 CIVIL STATE OF CALIFORNIA

MARK	REVISIONS	APPR	DATE

DESIGN BY TL DRAWN BY TL CHECKED BY AP

CITY OF RIVERSIDE
PUBLIC WORKS DEPARTMENT

APPROVED BY	BY	DATE
ENGINEERING MGR.	F.M.	4/3/12
CONSTRUCTION MGR.	D.C.	4/5/12
TRAFFIC DIVISION	A.H.	4/3/12
SURVEY		

APPROVED BY
PUBLIC WORKS DIRECTOR
DATE 4/6/2012

IOWA AVENUE GRADE SEPARATION

TITLE SHEET

DWG NO. R-4237
T-01
SHEET 01 OF
SCALE: AS SHOWN

RIVERSIDE CALIFORNIA

PUBLIC WORKS DEPARTMENT

IOWA AVENUE GRADE SEPARATION AT BNSF RAILROAD

BURLINGTON NORTHERN SANTA FE RAILROAD SAN BERNARDINO SUBDIVISION - MP 7.30

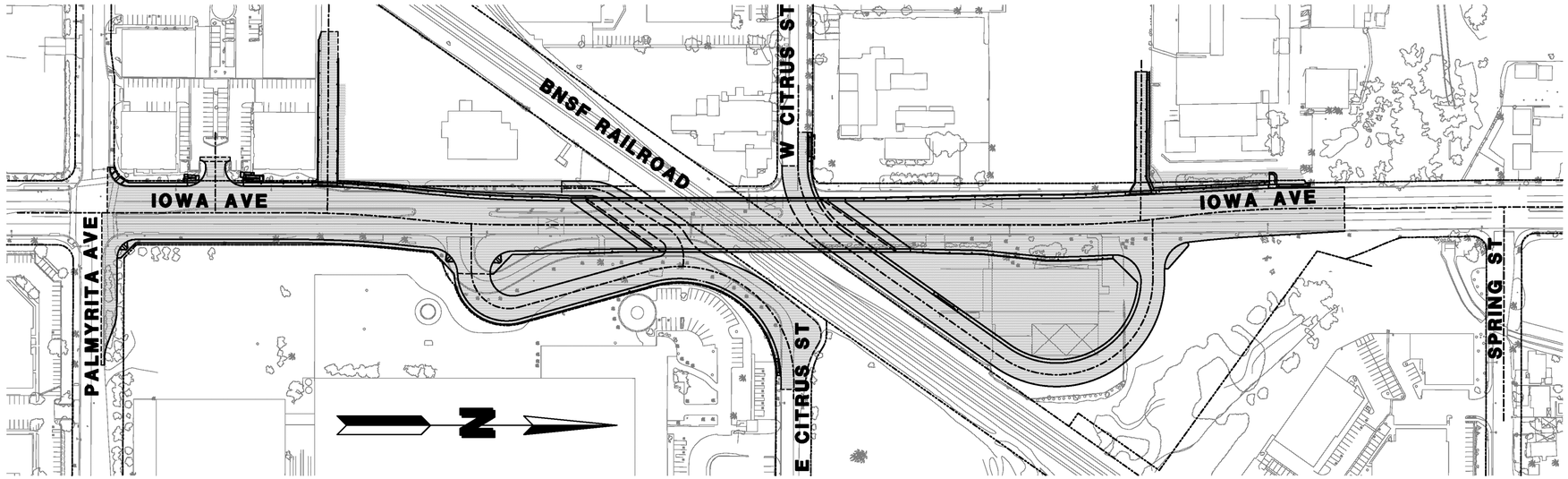

PROJECT LOCATION MAP

NOT TO SCALE

GENERAL CONSTRUCTION NOTES

1. UTILITY LINES SHOWN ARE BASED UPON A SEARCH OF AVAILABLE RECORDS. THERE IS NO ASSURANCE THAT THE LOCATION OF SUBSTRUCTURES SHOWN ARE ACCURATE. PRIOR TO ANY EXCAVATION WORK, THE CONTRACTOR SHALL NOTIFY UNDERGROUND SERVICE ALERT OF SOUTHERN CALIFORNIA (DIG ALERT) TO MARK THE LOCATION OF ALL SUBSTRUCTURES, WHETHER SHOWN OR NOT ON THESE DRAWINGS, AT LEAST 48 HOURS PRIOR TO THE COMMENCEMENT OF FIELD MARKING. THE CONTRACTOR SHALL USE PRECAUTION WHEN EXCAVATING. SUBSTRUCTURES ENCOUNTERED SHALL BE EXPOSED AND THE ENGINEER NOTIFIED OF THEIR EXISTENCE. THE CONTRACTOR SHALL BE RESPONSIBLE FOR THE PROTECTION OF ALL SUBSTRUCTURES, WHETHER SHOWN OR NOT, ON THESE DRAWINGS. THE CONTRACTOR SHALL REPAIR, AT HIS/HER EXPENSE, ANY SUBSTRUCTURES DAMAGE CAUSED BY HIS/HER OPERATIONS.
2. ALL ELEVATIONS AND OFFSETS SHOWN ON THE PLANS SHALL BE STAKED IN THE FIELD, AND VERIFIED PRIOR TO CONSTRUCTION. ALL ELEVATIONS, OFFSETS, AND DIMENSIONS SHOWN FOR RETAINING WALLS AND DRIVEWAYS ON OR ADJACENT TO PRIVATE PROPERTY SHALL BE VERIFIED PRIOR TO CONSTRUCTION.
3. PRIME CONTRACTORS BIDDING THIS WORK SHALL HAVE A CLASS "A" LICENSE.
4. PRIOR TO ISSUANCE OF GRADE SHEETS FOR ANY PROPOSED SEWER OR STORM DRAIN FACILITIES, CONTRACTOR SHALL EXPOSE ALL UTILITIES WHICH CROSS OR MAY BE IN CONFLICT WITH THE PROPOSED SEWER AND STORM DRAIN FACILITIES AND COORDINATE WITH THE INSPECTOR TO HAVE THE LOCATION AND ELEVATION VERIFIED BY SURVEYOR.
5. CONTRACTOR TO GIVE CITY PUBLIC UTILITIES DEPARTMENTS AT LEAST FIVE (5) WORKING DAYS WRITTEN NOTICE PRIOR TO START OF ANY CONSTRUCTION.
6. ALL GRADING SLOPES SHALL BE 2:1 MAX UNLESS NOTED OTHERWISE.

ABBREVIATIONS

AP = ANGLE POINT
AV = AIRVAC
BNSF = BURLINGTON NORTHERN SANTA FE
BO= BLOWOFF
BOC= BACK OF CURB
BV = BUTTERFLY VALVE
BW = BACK OF SIDEWALK
CARV = COMB AIR RELEASE VALVE ASSY
CB = CATCH BASIN
C & G = CURB AND GUTTER
ELECT = ELECTRIC
EMH = ELECTRIC MANHOLE
EPB = ELECTRIC PULLBOX
EV = ELECTRIC VAULT
FDC = FIRE DEPARTMENT CONNECTION
FV = FIRE VALVE
GTV = GATE VALVE
GV = GAS VALVE
GVLT = GAS VAULT
INT = INTERSECTION
LP = LIGHT POLE
PP = POWER POLE
SDMH = STORM DRAIN MANHOLE
SL = STREET LIGHT
SMH = SEWER MANHOLE
SP = STEEL POLE
TD = TOP OF DIKE
TS = TRAFFIC SIGNAL
TSPB = TRAFFIC SIGNAL PULLBOX
TVLT = TELEPHONE VAULT
UG = UNDERGROUND
VAR = VARIES
WM = WATER METER
WMH = WATER MANHOLE
WVLT = WATER VAULT
WV = WATER VALVE

NOTE: ALL ABBREVIATIONS ON THE PLANS ARE PER THE CITY'S AND CALTRANS STANDARDS UNLESS OTHERWISE LISTED ABOVE.

REGISTERED PROFESSIONAL ENGINEER BRIAN M SMITH No. C 70690 Exp. 06-15 CIVIL STATE OF CALIFORNIA

AS-BUILT
08/01/14

RECORD DRAWINGS
These Record Drawings (As–Builts) are based upon review and reliance on the design revisions during construction, field survey data, marked up prints from the Contractor and / or City Inspector, and a final site inspection.

Don't Dig...Until You Call U.S.A. Toll Free
1-800-227-2600
for the location of buried utility lines.
Don't disrupt vital services.
TWO WORKING DAYS BEFORE YOU DIG

PLANS PREPARED BY:
AECOM
901 VIA PIEMONTE, 5TH FLOOR
ONTARIO, CA 91764
(909) 579-3050

REGISTERED PROFESSIONAL ENGINEER JAMES M FARRAR No. C 45660 Exp. 12-12 CIVIL STATE OF CALIFORNIA

MARK	REVISIONS	APPR	DATE
AS-BUILT	ADDED TOTAL SHEET COUNT		8/1/14

DESIGN BY TL DRAWN BY TL CHECKED BY BMS

CITY OF RIVERSIDE
PUBLIC WORKS DEPARTMENT

APPROVED BY	BY	DATE

APPROVED BY
PUBLIC WORKS DIRECTOR
DATE

IOWA AVENUE
GRADE SEPARATION

TITLE SHEET

DWG NO. R–4237
T-01
SHEET 01 OF 133
SCALE: AS SHOWN

AS–BUILTS

DRAWING NUMBER	DRAWING ID	DRAWING TITLE	SHEET NUMBER
		GENERAL	
R-4237	T-01	TITLE SHEET	1
R-4237	T-02	INDEX OF DRAWINGS	2
R-4237	T-03	NOTES	3
		CIVIL	
R-4237	K-01	GEOMETRIC CONTROLS	4
R-4237	K-02	GEOMETRIC CONTROLS	5
R-4237	X-01	TYPICAL SECTIONS	6
R-4237	X-02	TYPICAL SECTIONS	7
R-4237	X-03	TYPICAL SECTIONS	8
R-4237	X-04	TYPICAL SECTIONS	9
R-4237	X-05	TYPICAL SECTIONS	10
R-4237	L-01	LAYOUT – IOWA AVENUE @ PALMYRITA AVENUE TO "A" 191+50	11
R-4237	L-01a	TCE LIMITS – IOWA AVENUE @ PALMYRITA AVENUE TO "A" 191+50	11a
R-4237	L-02	LAYOUT – IOWA AVENUE "A" 191+50 TO "A" 193+50 & S RAMP	12
R-4237	L-02a	TCE LIMITS – IOWA AVENUE "A" 191+50 TO "A" 193+50 & S RAMP	12a
R-4237	L-03	LAYOUT – IOWA AVENUE "A" 193+50 TO "A" 196+50 & E CITRUS ST "B" 10+00 TO "B" 12+95	13
R-4237	L-03a	TCE LIMITS – IOWA AVENUE "A" 193+50 TO "A" 196+50 & E CITRUS ST "B" 10+00 TO "B" 12+95	13a
R-4237	L-04	LAYOUT – IOWA AVENUE "A" 196+50 TO "A" 200+50 & E CITRUS ST "B" 12+95 TO "B" 16+75 AND ACCESS RD	14
R-4237	L-04a	TCE LIMITS – IOWA AVENUE "A" 196+50 TO "A" 200+50 & E CITRUS ST "B" 12+95 TO "B" 16+75 AND ACCESS RD	14a
R-4237	L-05	LAYOUT – IOWA AVENUE "A" 200+50 TO "A" 202+50 & E CITRUS ST "B" 16+75 TO "B" 19+00 & W CITRUS ST "C" 18+30 TO "C" 21+50	15
R-4237	L-05a	TCE LIMITS – IOWA AVENUE "A" 200+50 TO "A" 202+50 & E CITRUS ST "B" 16+75 TO "B" 19+00 & W CITRUS ST "C" 18+30 TO "C" 21+50	15a
R-4237	L-06	LAYOUT – IOWA AVENUE "A" 202+50 TO "A" 206+50 & W CITRUS ST "C" 16+40 TO "C" 18+30	16
R-4237	L-07	LAYOUT – W CITRUS ST "C" 11+50 TO "C" 16+40	17
R-4237	L-08	LAYOUT – IOWA AVENUE "A" 206+50 TO "A" 209+50 & W CITRUS ST "C" 10+00 TO "C" 11+50 & N RAMP	18
R-4237	L-08a	TCE LIMITS – IOWA AVENUE "A" 206+50 TO "A" 209+50 & W CITRUS ST "C" 10+00 TO "C" 11+50 & N RAMP	18a
R-4237	L-9	LAYOUT – IOWA AVENUE "A" 209+50 TO "A" 216+50	19
R-4237	L-9a	TCE LIMITS – IOWA AVENUE "A" 209+50 TO "A" 216+50	19a
R-4237	P-01	PROFILES – IOWA AVENUE "A" 187+83 TO "A" 193+50	20
R-4237	P-02	PROFILES – IOWA AVENUE "A" 193+50 TO "A" 198+50	21
R-4237	P-03	PROFILES – IOWA AVENUE "A" 198+50 TO "A" 204+50	22
R-4237	P-04	PROFILES – IOWA AVENUE "A" 204+50 TO "A" 209+50	23
R-4237	P-05	PROFILES – IOWA AVENUE "A" 209+50 TO "A" 211+50	24
R-4237	P-06	PROFILES – E CITRUS ST "B" 10+00 TO "B" 16+00	25
R-4237	P-07	PROFILES – E CITRUS ST "B" 16+00 TO "B" 19+00	26
R-4237	P-08	PROFILES – W CITRUS ST "C" 10+00 TO "C" 15+00	27
R-4237	P-09	PROFILES – W CITRUS ST "C" 15+00 TO "C" 21+50	28
R-4237	P-10	PROFILES – S RAMP & ACCESS RD	29
R-4237	P-11	PROFILES – N RAMP & DWY 01	30
R-4237	SE-01	SUPERELEVATION DIAGRAM	31
R-4237	SE-02	SUPERELEVATION DIAGRAM	32
R-4237	CD-01	CONSTRUCTION DEMOLITION – IOWA AVENUE @ PALMYRITA AVENUE TO "A" 191+50	33
R-4237	CD-02	CONSTRUCTION DEMOLITION – IOWA AVENUE "A" 191+50 TO "A" 193+50 & S RAMP	34
R-4237	CD-03	CONSTRUCTION DEMOLITION – IOWA AVENUE "A" 193+50 TO "A" 196+50 & E CITRUS ST "B" 10+00 TO "B" 12+95	35
R-4237	CD-04	CONSTRUCTION DEMOLITION – IOWA AVENUE "A" 196+50 TO "A" 200+50 & E CITRUS ST "B" 12+95 TO "B" 16+75 & ACCESS RD	36
R-4237	CD-05	CONSTRUCTION DEMOLITION – IOWA AVENUE "A" 200+50 TO "A" 202+50 & E CITRUS ST "B" 16+75 TO "B" 19+00 & W CITRUS ST "C" 18+30 TO "C" 21+50	37
R-4237	CD-06	CONSTRUCTION DEMOLITION – IOWA AVENUE "A" 202+50 TO "A" 206+50 & W CITRUS ST "C" 16+40 TO "C" 18+30	38
R-4237	CD-07	CONSTRUCTION DEMOLITION – W CITRUS ST "C" 11+50 TO "C" 16+40	39
R-4237	CD-08	CONSTRUCTION DEMOLITION – IOWA AVENUE "A" 206+50 TO "A" 209+50 & W CITRUS ST "C" 10+00 TO "C" 11+50 & N RAMP	40
R-4237	CD-09	CONSTRUCTION DEMOLITION – IOWA AVENUE "A" 209+50 TO "A" 212+50	41
R-4237	C-01	CONSTRUCTION DETAILS: APN 247-140-035	42
R-4237	C-02	CONSTRUCTION DETAILS: APN 247-140-034	43
R-4237	C-03	CONSTRUCTION DETAILS: RETAINING WALLS "J" & "K"	44
R-4237	C-04	CONSTRUCTION DETAILS: APN 240-140-009	45
R-4237	C-05	CONSTRUCTION DETAILS: RETAINING WALL NO. 9	46
R-4237	C-06	CONSTRUCTION DETAILS: APNs 247-130-018 & 247-170-040 & MISC DETAILS	47
R-4237	C-07	CONSTRUCTION DETAILS: NORTH RAMP	48
R-4237	C-08	CONSTRUCTION DETAILS: APN 247-130-019	49
R-4237	C-09	CONSTRUCTION DETAILS: APN 247-130-019	50
R-4237	C-10	CONSTRUCTION DETAILS: MISC DETAILS	51
R-4237	C-11	CONSTRUCTION DETAILS: MISC DETAILS	52
R-4237	C-12	CONSTRUCTION DETAILS: AUTOMATIC SLIDING GATE	52a
R-4237	C-13	CONSTRUCTION DETAILS: AUTOMATIC SWING GATE	52b
R-4237	G-01	GRADING – IOWA AVENUE @ PALMYRITA AVENUE TO "A" 191+50	53
R-4237	G-02	GRADING – IOWA AVENUE "A" 191+50 TO "A" 193+50 & S RAMP	54
R-4237	G-03	GRADING – IOWA AVENUE "A" 193+50 TO "A" 196+50 & E CITRUS ST "B" 10+00 TO "B" 12+95	55
R-4237	G-04	GRADING – IOWA AVENUE "A" 196+50 TO "A" 200+50 & E CITRUS ST "B" 12+95 TO "B" 16+75 AND ACCESS RD	56
R-4237	G-05	GRADING – IOWA AVENUE "A" 200+50 TO "A" 202+50 & E CITRUS ST "B" 16+75 TO "B" 19+00 & W CITRUS ST "C" 18+30 TO "C" 21+50	57
R-4237	G-06	GRADING – IOWA AVENUE "A" 202+50 TO "A" 206+50 & W CITRUS ST "C" 16+40 TO "C" 18+30	58
R-4237	G-07	GRADING – W CITRUS ST "C" 11+50 TO "C" 16+40	59
R-4237	G-08	GRADING – IOWA AVENUE "A" 206+50 TO "A" 209+50 & W CITRUS ST "C" 10+00 TO "C" 11+50 & N RAMP	60
R-4237	G-09	GRADING – IOWA AVENUE "A" 209+50 TO "A" 211+40	61
R-4237	G-10	GRADING – DETAILS: APN 247-150-007	62
		DRAINAGE	
D-864	D-01	STORM DRAIN PLAN & PROFILE – 30" RCP	63
D-864	D-02	STORM DRAIN PROFILES – LATERALS "A1", "A2", "A3", "A4" & "A5" & MISC DETAILS	64
		STAGE CONSTRUCTION	
R-4237	SC-01	STAGE CONSTRUCTION – STAGE 1A	65
R-4237	SC-02	STAGE CONSTRUCTION – STAGE 1B	66
R-4237	SC-03	STAGE CONSTRUCTION – STAGE 2A	67
R-4237	SC-04	STAGE CONSTRUCTION – STAGE 2B	68
R-4237	DE-01	DETOUR: FULL CLOSURE	69
R-4237	DE-02	DETOUR: SIGN DETAILS	70
		EROSION CONTROL	
R-4237	EC-01	EROSION CONTROL	71
R-4237	EC-02	EROSION CONTROL	72
		SIGNING & STRIPING	
XL-604	PD-01	SIGNING & STRIPING – IOWA AVENUE @ PALMYRITA TO "A" 193+50	73
XL-604	PD-02	SIGNING & STRIPING – IOWA AVENUE "A" 193+50 TO "A" 203+50 & E CITRUS ST "B" 10+00 TO "B" 11+50	74
XL-604	PD-03	SIGNING & STRIPING – IOWA AVENUE "A" 203+50 TO "A" 211+40 & W CITRUS ST "C" 10+00 TO "C" 11+50	75
XL-604	PD-04	SIGNING & STRIPING – E CITRUS ST "B" 11+50 TO "B" 19+00 & W CITRUS ST "C" 11+50 TO "C" 21+10	76
		STRUCTURAL	
R-4237	S-01	GENERAL PLAN	77
R-4237	S-02	GENERAL NOTES	78
R-4237	S-03	STRUCTURE ELEVATION AT BNSF RR	79
R-4237	S-04	DECK CONTOURS	80
R-4237	S-05	FOUNDATION PLAN	81
R-4237	S-06	ABUTMENT LAYOUT	82
R-4237	S-07	ABUTMENT PILE LAYOUT	83
R-4237	S-08	ABUTMENT DETAILS NO. 1	84
R-4237	S-09	ABUTMENT DETAILS NO. 2	85
R-4237	S-10	ABUTMENT DETAILS NO. 3	86
R-4237	S-11	ABUTMENT DETAILS NO. 4	87
R-4237	S-12	ABUTMENT DETAILS NO. 5	88
R-4237	S-13	BENT LAYOUT	89
R-4237	S-14	BENT DETAILS NO. 1	90
R-4237	S-15	BENT DETAILS NO. 2	91
R-4237	S-16	TYPICAL SECTION	92
R-4237	S-17	GIRDER LAYOUT NO. 1	93
R-4237	S-18	GIRDER LAYOUT NO. 2	94
R-4237	S-19	GIRDER DETAILS	95
R-4237	S-20	END DIAPHRAGM DETAILS	96
R-4237	S-21	GIRDER REINFORCEMENT	97
R-4237	S-22	JOINT SEAL ASSEMBLY (MAXIMUM MOVEMENT RATING = 4")	98
R-4237	S-23	JOINT ARMOR DETAILS (MAXIMUM MOVEMENT RATING = 4")	99
R-4237	S-24	STRUCTURE APPROACH TYPE N(30S)	100
R-4237	S-25	STRUCTURE APPROACH DRAINAGE DETAILS	101
R-4237	S-26	CHAIN LINK RAILING TYPE 3	102
R-4237	S-27	LOG OF TEST BORINGS	103
R-4237	S-100	RETAINING WALL INDEX	104
R-4237	S-101	RETAINING WALL NO. 1 GENERAL PLAN	105
R-4237	S-102	RETAINING WALL NO. 2 GENERAL PLAN	106
R-4237	S-103	RETAINING WALL NO. 3 GENERAL PLAN	107
R-4237	S-104	RETAINING WALL NO. 4 GENERAL PLAN	108
R-4237	S-105	RETAINING WALL NO. 4 LAYOUT NO. 1	109
R-4237	S-106	RETAINING WALL NO. 4 LAYOUT NO. 2	110
R-4237	S-107	RETAINING WALL NO. 5 GENERAL PLAN	111
R-4237	S-108	RETAINING WALL NO. 6 GENERAL PLAN NO. 1	112
R-4237	S-109	RETAINING WALL NO. 6 GENERAL PLAN NO. 2	113
R-4237	S-110	RETAINING WALL NO. 6 LAYOUT NO. 1	114
R-4237	S-111	RETAINING WALL NO. 6 LAYOUT NO. 2	115
R-4237	S-112	RETAINING WALL NO. 6 LAYOUT NO. 3	116
R-4237	S-113	RETAINING WALL NO. 7 GENERAL PLAN	117
R-4237	S-114	RETAINING WALL NO. 7 LAYOUT NO. 1	118
R-4237	S-115	RETAINING WALL NO. 7 LAYOUT NO. 2	119
R-4237	S-116	RETAINING WALL NO. 8 GENERAL PLAN NO. 1	120
R-4237	S-117	RETAINING WALL NO. 8 GENERAL PLAN NO. 2	121
R-4237	S-118	RETAINING WALL NO. 8 LAYOUT NO. 1	122
R-4237	S-119	RETAINING WALL NO. 8 LAYOUT NO. 2	123
R-4237	S-120	RETAINING WALL ARCHITECTURAL DETAILS NO. 1	124
R-4237	S-121	RETAINING WALL ARCHITECTURAL DETAILS NO. 2	125
R-4237	S-122	RETAINING WALL ARCHITECTURAL DETAILS NO. 3	126
R-4237	S-123	MECHANICALLY STABILIZED EMBANKMENT DETAIL NO. 1	127
R-4237	S-124	MECHANICALLY STABILIZED EMBANKMENT DETAIL NO. 2	128
R-4237	S-125	MECHANICALLY STABILIZED EMBANKMENT DETAIL NO. 3	129
R-4237	S-126	MECHANICALLY STABILIZED EMBANKMENT DETAIL NO. 4	130
R-4237	S-127	MECHANICALLY STABILIZED EMBANKMENT DETAIL NO. 5	131
R-4237	S-128	LOG OF TEST BORINGS RETAINING WALL NO. 4	132
R-4237	S-129	LOG OF TEST BORINGS RETAINING WALL NOs. 6, 7 & 8	133
		LANDSCAPE AND IRRIGATION	
R-4237L	LS 1.1	IRRIGATION PLAN	1
R-4237L	LS 1.2	IRRIGATION PLAN	2
R-4237L	LS 1.3	IRRIGATION DETAILS	3
R-4237L	LS 1.4	IRRIGATION DETAILS	4
R-4237L	LS 2.1	PLANTING PLAN	5
R-4237L	LS 2.2	PLANTING PLAN	6
R-4237L	LS 2.3	PLANTING DETAILS	7
R-4237L	LS 3.1	IRRIGATION PLAN	8
R-4237L	LS 3.2	IRRIGATION PLAN	9
R-4237L	LS 4.1	PLANTING PLAN	10
R-4237L	LS 4.2	PLANTING PLAN	11
		TRAFFIC SIGNAL AND LIGHTING	
X-382A		TRAFFIC SIGNAL – IOWA AVENUE AT PALMYRITA AVENUE	1
X-536A		TRAFFIC SIGNAL – IOWA AVENUE AT E CITRUS ST	1
X-537A		TRAFFIC SIGNAL – IOWA AVENUE AT W CITRUS ST	1
		18 INCH SEWER	
S-2088		18 INCH SEWER – TITLE SHEET	1
S-2088		18 INCH SEWER – PALMYRITA AVE TO E CITRUS ST	2
S-2088		18 INCH SEWER – PALMYRITA AVE TO E CITRUS ST	3
		8 INCH SEWER	
S-2091		8 INCH SEWER – TITLE SHEET	1
S-2091		8 INCH SEWER – W CITRUS ST TO IOWA AVE	2
S-2091		8 INCH SEWER – IOWA AVE & SEWER LATERALS	3
		STREET LIGHTING	
120023-02		IOWA AVE STREET LIGHTING BETWEEN PALMYRITA AVE AND SPRING ST	1
120023-02		IOWA AVE STREET LIGHTING BETWEEN PALMYRITA AVE AND SPRING ST	2
120023-02		IOWA AVE STREET LIGHTING BETWEEN PALMYRITA AVE AND SPRING ST	3
120023-02		IOWA AVE STREET LIGHTING BETWEEN PALMYRITA AVE AND SPRING ST	4
120023-02		IOWA AVE STREET LIGHTING BETWEEN PALMYRITA AVE AND SPRING ST	5
		ELECTRICAL ENGINEERING	
120010-38		IOWA AVE GRADE SEPARATION ELECTRICAL ENGINEERING	1
120010-38		IOWA AVE GRADE SEPARATION ELECTRICAL ENGINEERING	2

REGISTERED PROFESSIONAL ENGINEER HAOYUAN "TIMOTHY" LIU No. C-75045 Exp. 12/31/2015 CIVIL STATE OF CALIFORNIA

AS-BUILT 08/01/14

Don't Dig...Until You Call U.S.A. Toll Free 1-800-227-2600 for the location of buried utility lines. Don't disrupt vital services. TWO WORKING DAYS BEFORE YOU DIG

PLANS PREPARED BY:
AECOM
901 VIA PIEMONTE, 5TH FLOOR
ONTARIO, CA 91764
(909) 579-3050

REGISTERED PROFESSIONAL ENGINEER JAMES M FABER No. C 45668 Exp. 12-12 CIVIL STATE OF CALIFORNIA

MARK	REVISIONS	APPR	DATE
AS-BUILT	INSERTED MISSING TCE LIMIT SHEETS & SLIDING/SQING GATE DETAIL SHEETS ADDED TOTAL SHEET COUNT		8/1/14

DESIGN BY TL DRAWN BY TL CHECKED BY BMS

IOWA AVENUE GRADE SEPARATION

INDEX OF DRAWINGS

DWG NO. R-4237
T-02
SHEET 02 OF 133
SCALE: AS SHOWN

AS-BUILTS

ROADWAY CONSTRUCTION NOTES:

1. CONSTRUCT 8" ASPHALT CONCRETE OVER 16" CRUSHED AGGREGATE BASE.
2. CONSTRUCT 8" TYPE I CURB & GUTTER PER THE CITY'S STD NO. 200.
3. CONSTRUCT 8" TYPE II CURB PER THE CITY'S STD NO. 200.
4. CONSTRUCT SIDEWALK, WIDTH PER PLAN, PER THE CITY'S STD NO. 325.
5. CONSTRUCT WHEELCHAIR RAMP (TYPE I) PER THE CITY'S STD NO. 304.
6. CONSTRUCT WHEELCHAIR RAMP (TYPE II) PER THE CITY'S STD NO. 304.
7. CONSTRUCT DRIVEWAY APPROACH PER THE CITY'S STD NO. 302.
8. CONSTRUCT 7" ASPHALT CONCRETE OVER 12" CRUSHED AGGREGATE BASE.
9. CONSTRUCT 5" ASPHALT CONCRETE OVER 10" CRUSHED AGGREGATE BASE.

9A. CONSTRUCT 8" PCC OVER 7" CRUSHED AGGREGATE BASE. AS-BUILTS

10. CONSTRUCT CROSS GUTTER PER THE CITY'S STD NO. 220.
11. CONSTRUCT A1-6 CURB PER SPPWC STD NO. 120-2.
12. CONSTRUCT WHEELCHAIR RAMP (TYPE III) PER THE CITY'S STD NO. 304.
13. INSTALL CHAIN LINK FENCE AND GATE PER THE CITY'S STD NO. 380.
14. CONSTRUCT MSE WALL, SEE STRUCTURAL PLANS.
15. CONSTRUCT 6" TYPE I CURB & GUTTER PER THE CITY'S STD NO. 200.
16. CONSTRUCT BARRIER SLAB TYPE B, SEE STRUCTURAL PLANS.
17. CONSTRUCT C&G TRANSITION PER DETAIL 1 ON SHEET C-06.
18. CONSTRUCT PARKWAY DRAIN PER DETAIL 2 ON SHEET C-06.
19. COLDMILL 2" MIN AND OVERLAY 2" MIN AC.

20. CONSTRUCT 6" PCC PAVEMENT OVER 4" CRUSHED AGGREGATE BASE. AS-BUILTS

21. CONSTRUCT PICKET RAILING FENCE PER DETAIL 5 ON SHEET C-10.
22. CONSTRUCT 3" ASPHALT CONCRETE OVER 7" CRUSHED AGGREGATE BASE.

22A. CONSTRUCT 6" ASPHALT CONCRETE OVER 4" CRUSHED AGGREGATE BASE. AS-BUILTS

23. CONSTRUCT RETAINING WALL TYPE 6B PER DETAILS ON SHEET C-01 TO C-03.
24. INSTALL RETAINING CURB PER DETAIL 4 (SECTION VIEW) ON SHEET C-10.
25. INSTALL LANDSCAPE AND IRRIGATION IMPROVEMENTS PER LANDSCAPE AND IRRIGATION PLANS.
26. CONSTRUCT 3" ASPHALT CONCRETE.
27. INSTALL METAL HANDRAILING PER SPPWC STD 606-3 AND PER THE ADDITIONAL DETAILS ON THE SPECIFIC SHEETS.
28. INSTALL 6" ASPHALT CONCRETE BERM TYPE I PER THE CITY'S STD NO. 250.
29. INSTALL RETAINING CURB PER DETAIL ON SHEET C-02.
30. CONSTRUCT HARDSCAPE, WIDTH PER PLAN, PER DETAIL 6 ON SHEET C-11.
31. CONSTRUCT WHEELCHAIR RAMP PER DETAIL 7 ON SHEET C-11.
32. CONSTRUCT CURB TRANSITION PER DETAIL 8 ON SHEET C-11.
33. CONSTRUCT WHEELCHAIR RAMP (TYPE II-A) PER THE CITY'S STD NO. 304.
34. CONSTRUCT 48"X54" (TP-3) TRANSFORMER PAD PER THE PUBLIC UTILITIES UNDERGROUND STRUCTURES STDS 620 & 621 AND DETAIL 9 ON SHEET C-11.
35. CONSTRUCT CONRETE BLOCK SLOUGH WALL FOR TRANSFORMER PAD PER SPPWC STD 622-3 AND DETAIL 9 ON SHEET C-11.
36. CONSTRUCT REVERSE TAPER PER THE CITY'S STD NO. 122.
37. INSTALL AUTOMATIC SLIDING GATE PER DETAIL ON SHEET C-12.
38. INSTALL AUTOMATIC SWING GATE PER DETAIL ON SHEET C-13.
39. INSTALL MODIFIED METAL HANDRAILING PER ATTACHED DETAIL DRAWING & PER THE ADDITIONAL DETAILS ON PERTAINING SHEET(S).

SIGNING AND STRIPING CONSTRUCTION NOTES:

1. REMOVE AND SAVAGE EXISTING SIGN(S) TO CITY'S YARD.
2. INSTALL TYPE IV ARROW PER 2006 CALTRANS STD PLAN A24A.
3. INSTALL TYPE VI ARROW PER 2006 CALTRANS STD PLAN A24A.
4. INSTALL DETAIL 22 STRIPING PER 2006 CALTRANS STD PLAN A20A.
5. INSTALL DETAIL 29 STRIPING PER 2006 CALTRANS STD PLAN A20B.
6. INSTALL DETAIL 38 STRIPING PER 2006 CALTRANS STD PLAN A20D.
7. INSTALL 12" SOLID WHITE CROSSWALK LINE OR STOP LINE.
8. INSTALL 4" SOLID WHITE LINE APPROXIMATELY 50' LONG.
9. INSTALL DETAIL 27B STRIPING PER 2006 CALTRANS STD PLAN A20B.
10. INSTALL NEW SIGN(S) AS SHOWN ON PLANS.
11. RELOCATE EXISTING SIGN(S) AS SHOWN ON PLANS.
12. INSTALL "STOP" PAVEMENT MARKING PER 2006 CALTRANS STD PLAN A24D.
13. INSTALL DETAIL 12 STRIPING PER 2006 CALTRANS STD PLAN A20A.
14. INSTALL REVERSE TAPER PER CITY STD NO. 122.
15. INSTALL MEDIAN FLARE PER SPPWC STD. PLAN NO. 141-2.
16. INSTALL DETAIL 38A STRIPING PER 2006 CALTRANS STD PLAN A20D.
17. INSTALL DETAIL 21 STRIPING PER 2006 CALTRANS STD PLAN A20A.
18. INSTALL DETAIL 37B STRIPING PER 2006 CALTRANS STD PLAN A20C.
19. INSTALL 8" WHITE DIAGONAL STRIPING 50' ON CENTER.
20. INSTALL DETAIL 39 PER 2006 CALTRANS STD PLAN A20D.
21. INSTALL BIKE LANE SYMBOL PER 2006 CALTRANS STD PLAN A24C.
22. INSTALL BIKE LANE ARROW PER 2006 CALTRANS STD PLAN A24A.
23. INSTALL PAVEMENT MARKINGS AS SHOWN ON PLANS.
24. INSTALL 8" YELLOW DIAGONAL.
25. INSTALL 8" WHITE CHEVRON MARKINGS AT 50' ON CENTER.
26. INSTALL STREET NAME SIGN PER CITY'S STANDARD NO. 662.
27. INSTALL DETAIL 32 PER 2006 CALTRANS STD PLAN A20B.
28. RELOCATE AND INSTALL RTA BUS STOP SIGN AND APPURTENANCES.
29. INSTALL 4" SOLID WHITE LINE (18' MIN LONG) FOR PARKING SPACES.

STORM DRAIN CONSTRUCTION NOTES

1. CONSTRUCT 24" RCP (D-LOAD PER PROFILE)
2. CONSTRUCT 18" RCP (D-LOAD PER PROFILE)
3. CONSTRUCT 30" RCP (D-LOAD PER PROFILE)
4. CONSTRUCT 36" RCP (D-LOAD PER PROFILE)
5. CONSTRUCT CATCH BASIN PER CITY OF RIVERSIDE STD. DETAIL NO. 406 W/ LOCAL DEPRESSION
6. CONSTRUCT CATCH BASIN PER CITY OF RIVERSIDE STD. DETAIL NO. 405 W/ LOCAL DEPRESSION.
8. CONSTRUCT TYPE B CONCRETE ENCASEMENT PER CITY PUBLIC UTILITIES STD. CWD-023-1
9. CONSTRUCT CONCRETE COLLAR PER RCFC&WCD STD. DETAIL M803.
10. CONSTRUCT MANHOLE AX PER CITY OF RIVERSIDE STD. DETAIL NO. 430.
11. CONSTRUCT LOCAL DEPRESSION NO. 2 PER RCFC&WCD STD. DETAIL LD201. CASE AND "W" PER PLAN.
12. CONSTRUCT CATCH BASIN NO. 1 PER RCFC&WCD STD. DETAIL CB100. "W" AND "V" PER PLAN.
13. REMOVE EXISTING STORM DRAIN PER PLAN
14. TRENCH BACKFILL PER CITY OF RIV STD. 453 AND CASE 1 PIPE BEDDING PER CITY STD. 452.
15. CONSTRUCT JUNCTION STRUCTURE C PER CITY OF RIVERSIDE STD. DETAIL NO. 422
16. CONSTRUCT MANHOLE EZ PER CITY OF RIVERSIDE STD. DETAIL NO. 431.
17. ABANDONED IN PLACE
19. CONSTRUCT CB FILTER INSERT PER KRISTAR FLO-GUARD +PLUS, OR APPROVED EQUAL.
20. CONSTRUCT PIPE ANCHOR PER SPPWC STD 221-2
21. CONSTRUCT FULL DEPTH SLURRY CEMENT BACKFILL PER DETAIL ON SHEET D-02.
22. CONSTRUCT DRAINAGE INLET STENCIL MARKER
23. CONSTRUCT COMPRESSIBLE BLANKET PER SPPWC STD 225-2
24. CONSTRUCT PARKWAY DRAIN PER DETAIL ON SHEET D-02

DEMOLITION NOTES:

1. SAWCUT EXISTING PAVEMENT
2. REMOVE EXISTING PAVEMENT
3. REMOVE TREES & ROOTS
4. REMOVE EXISTING CURB & GUTTER
5. REMOVE EXISTING CROSS GUTTER
6. REMOVE EXISTING SIDEWALK
7. REMOVE WALL
8. REMOVE EXISTING MEDIAN ISLAND
9. REMOVE EXISTING FENCE
10. REMOVE EXISTING RIBBON GUTTER
11. REMOVE EXISTING MANHOLE
12. PROTECT IN PLACE
13. RELOCATE BY OTHERS
14. REMOVE SIGN AND/OR POST
15. REMOVE EXISTING AC BERM
16. REMOVE BY OTHERS
17. NOT USED
18. NOT USED
19. NOT USED
20. REMOVE EXISTING
21. REMOVE EXISTING DRIVEWAY
22. ABANDONED IN PLACE
23. DEMOLISH BUILDINGS AND FOOTINGS
24. RELOCATE BY CONTRACTOR
25. ADJUST TO GRADE
26. RELOCATE BUSINESS SIGN
27. RELOCATED BY CITY'S FORCE
28. REMOVED BY CITY'S FORCE
29. REMOVE EXISTING BLOCK WALL

REGISTERED PROFESSIONAL ENGINEER HAOYUAN "TIMOTHY" LIU No. C-75045 Exp. 12/31/2015 CIVIL STATE OF CALIFORNIA

AS-BUILT
08/01/14

Don't Dig...Until You Call U.S.A. Toll Free
1-800-227-2600
for the location of buried utility lines.
Don't disrupt vital service.
TWO WORKING DAYS BEFORE YOU DIG

PLANS PREPARED BY:
AECOM
901 VIA PIEMONTE, 5TH FLOOR
ONTARIO, CA 91764
(909) 579-3050

REGISTERED PROFESSIONAL ENGINEER JAMES M FARRELLY No. C 55662 Exp. 12-12 CIVIL STATE OF CALIFORNIA

MARK	REVISIONS	APPR	DATE
AS-BUILT	REVISED CONSTRUCTION NOTES PER CORRESPONDING PLAN CHANGES ADDED TOTAL SHEET COUNT		8/1/14

DESIGN BY TL DRAWN BY TL CHECKED BY BMS

IOWA AVENUE
GRADE SEPARATION

NOTES

DWG NO. R-4237
T-03
SHEET 03 OF 133
SCALE: AS SHOWN

AS-BUILTS

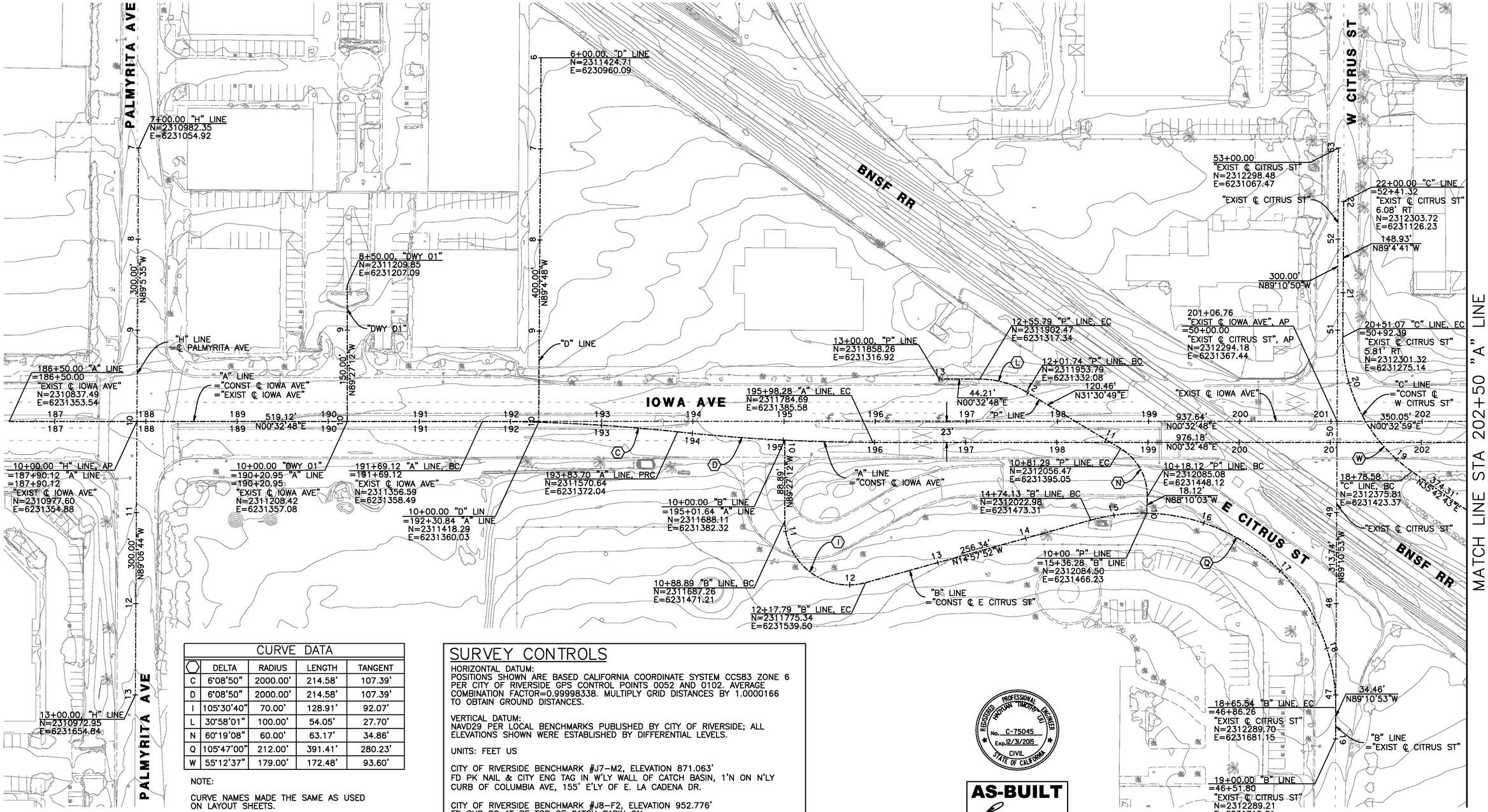

CURVE DATA				
⬡	DELTA	RADIUS	LENGTH	TANGENT
C	6°08'50"	2000.00'	214.58'	107.39'
D	6°08'50"	2000.00'	214.58'	107.39'
I	105°30'40"	70.00'	128.91'	92.07'
L	30°58'01"	100.00'	54.05'	27.70'
N	60°19'08"	60.00'	63.17'	34.86'
Q	105°47'00"	212.00'	391.41'	280.23'
W	55°12'37"	179.00'	172.48'	93.60'

NOTE:

CURVE NAMES MADE THE SAME AS USED ON LAYOUT SHEETS.

0 25 50 100 150 200

SCALE: 1" = 50'

SURVEY CONTROLS

HORIZONTAL DATUM:
POSITIONS SHOWN ARE BASED CALIFORNIA COORDINATE SYSTEM CCS83 ZONE 6 PER CITY OF RIVERSIDE GPS CONTROL POINTS 0052 AND 0102. AVERAGE COMBINATION FACTOR=0.99998338. MULTIPLY GRID DISTANCES BY 1.0000166 TO OBTAIN GROUND DISTANCES.

VERTICAL DATUM:
NAVD29 PER LOCAL BENCHMARKS PUBLISHED BY CITY OF RIVERSIDE; ALL ELEVATIONS SHOWN WERE ESTABLISHED BY DIFFERENTIAL LEVELS.

UNITS: FEET US

CITY OF RIVERSIDE BENCHMARK #J7-M2, ELEVATION 871.063'
FD PK NAIL & CITY ENG TAG IN W'LY WALL OF CATCH BASIN, 1'N ON N'LY CURB OF COLUMBIA AVE, 155' E'LY OF E. LA CADENA DR.

CITY OF RIVERSIDE BENCHMARK #J8-F2, ELEVATION 952.776'
FD CHS SQ AT SE TOP OF CATCH BASIN ON N'LY SIDE OF CENTER ST. E OF TRANSIT AVE

REGISTERED PROFESSIONAL ENGINEER HAYDEN TIMOTHY LU No. C-75045 Exp. 12/31/2015 CIVIL STATE OF CALIFORNIA

AS-BUILT
08/01/14

Don't Dig...Until You Call U.S.A. Toll Free
1-800-227-2600
for the location of buried utility lines.
Don't disrupt vital services.
TWO WORKING DAYS BEFORE YOU DIG

PLANS PREPARED BY:
AECOM
901 VIA PIEMONTE, 5TH FLOOR
ONTARIO, CA 91764
(909) 579-3050

REGISTERED PROFESSIONAL ENGINEER JAMES M FARRIER No. C 55661 Exp. 12-12 CIVIL STATE OF CALIFORNIA

MARK	REVISIONS	APPR	DATE
AS-BUILT	ADDED TOTAL SHEET COUNT		8/1/14

DESIGN BY TL DRAWN BY TL CHECKED BY BMS

IOWA AVENUE
GRADE SEPARATION

GEOMETRIC CONTROLS

DWG NO. R-4237
K-01
SHEET 04 OF 133
SCALE: AS SHOWN

AS-BUILTS

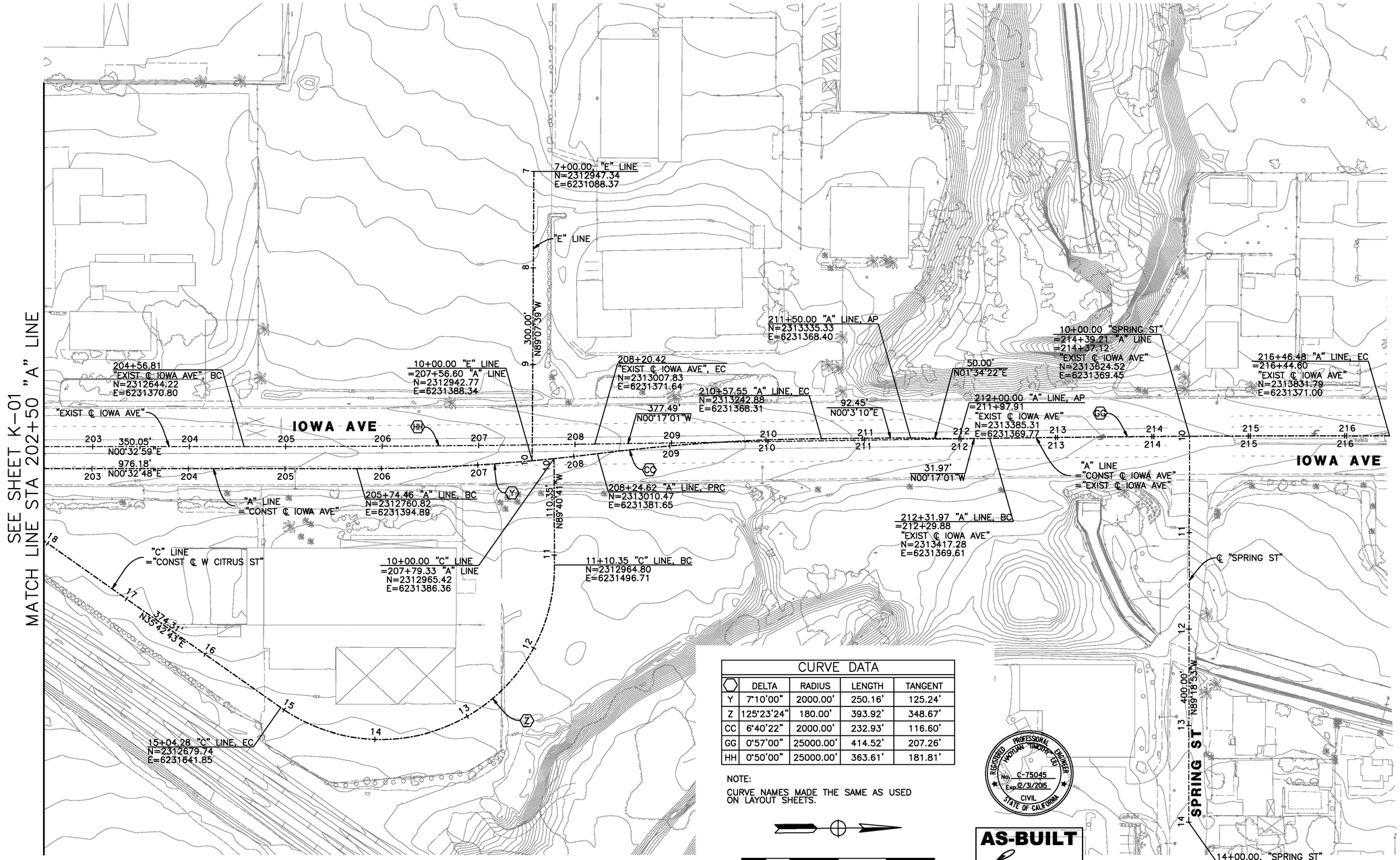

CURVE DATA				
⬡	DELTA	RADIUS	LENGTH	TANGENT
Y	7°10'00"	2000.00'	250.16'	125.24'
Z	125°23'24"	180.00'	393.92'	348.67'
CC	6°40'22"	2000.00'	232.93'	116.60'
GG	0°57'00"	25000.00'	414.52'	207.26'
HH	0°50'00"	25000.00'	363.61'	181.81'

NOTE:

CURVE NAMES MADE THE SAME AS USED ON LAYOUT SHEETS.

REGISTERED PROFESSIONAL ENGINEER
ANTONY TIMOTHY DU
No. C-75045
Exp. 12/31/2015
CIVIL
STATE OF CALIFORNIA

AS-BUILT
08/01/14

Don't Dig...Until You Call U.S.A. Toll Free
1-800-227-2600
for the location of buried utility lines.
Don't disrupt vital services.
TWO WORKING DAYS BEFORE YOU DIG

PLANS PREPARED BY:
AECOM
901 VIA PIEMONTE, 5TH FLOOR
ONTARIO, CA 91764
(909) 579-3050

REGISTERED PROFESSIONAL ENGINEER
JAMES M. FARRIS
No. C 65662
Exp. 12-2
CIVIL
STATE OF CALIFORNIA

MARK	REVISIONS	APPR	DATE
AS-BUILT	ADDED TOTAL SHEET COUNT		8/1/14

DESIGN BY TL DRAWN BY TL CHECKED BY BMS

IOWA AVENUE
GRADE SEPARATION

GEOMETRIC CONTROLS

DWG NO. R-4237
K-02
SHEET 05 OF 133
SCALE: AS SHOWN

AS-BUILTS

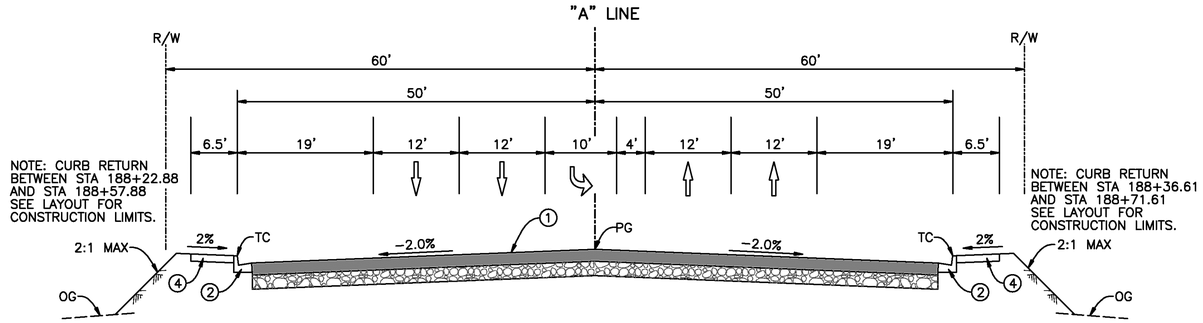

NOTE: DRIVEWAY APPROACH BETWEEN STA 189+67.95 AND STA 190+73.95 SEE LAYOUT FOR CONSTRUCTION LIMITS.

IOWA AVENUE LT

STA 188+18.12 TO STA 190+80.95 "A" LINE

NO SCALE

IOWA AVENUE RT

STA 188+08.12 TO STA 190+80.95 "A" LINE

NO SCALE

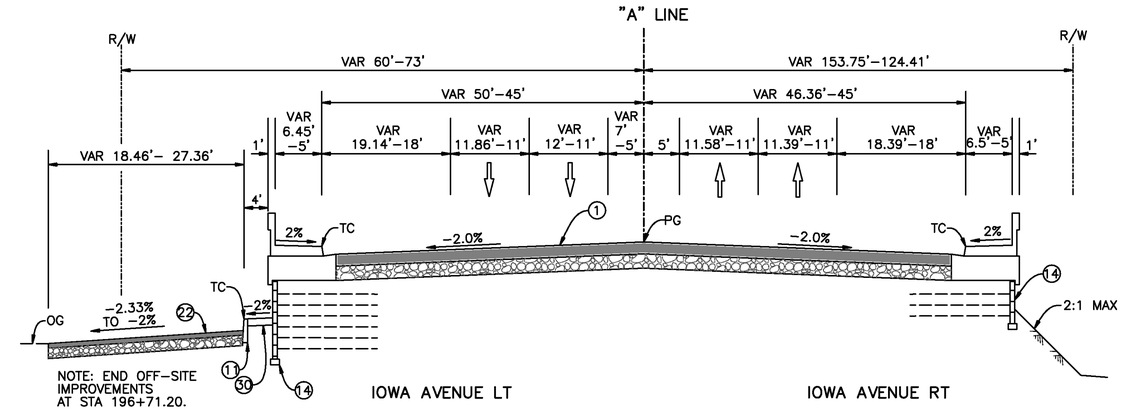

IOWA AVENUE LT

STA 194+38.94 TO STA 196+89.00 "A" LINE

NO SCALE

IOWA AVENUE RT

STA 197+03.31 TO STA 198+11.08 "A" LINE

NO SCALE

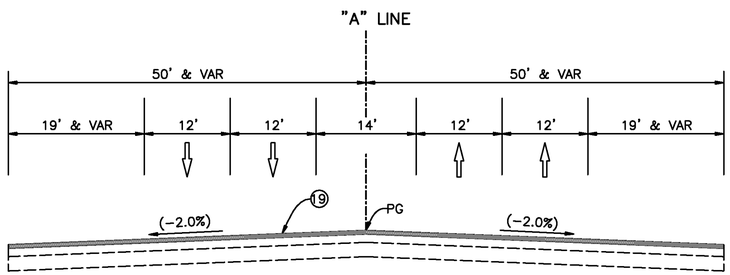

IOWA AVENUE LT

STA 187+62.11 TO STA 188+18.12 "A" LINE

NO SCALE

IOWA AVENUE RT

STA 187+62.11 TO STA 188+08.12 "A" LINE

NO SCALE

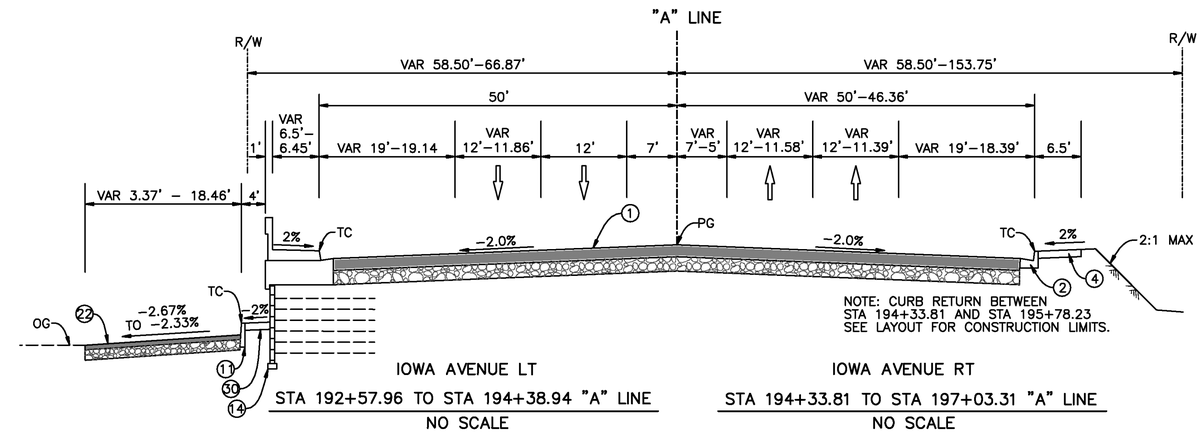

IOWA AVENUE LT

STA 192+57.96 TO STA 194+38.94 "A" LINE

NO SCALE

IOWA AVENUE RT

STA 194+33.81 TO STA 197+03.31 "A" LINE

NO SCALE

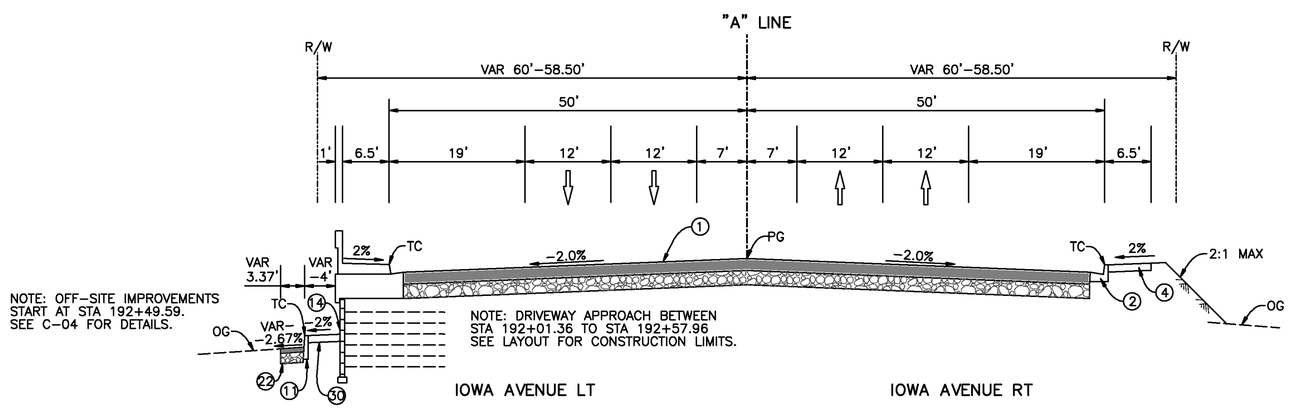

IOWA AVENUE LT

STA 190+80.95 TO STA 192+57.96 "A" LINE

NO SCALE

IOWA AVENUE RT

STA 190+80.95 TO STA 194+33.81 "A" LINE

NO SCALE

CONSTRUCTION NOTES:

1. CONSTRUCT 8" ASPHALT CONCRETE OVER 16" CRUSHED AGGREGATE BASE.
2. CONSTRUCT 8" TYPE I CURB & GUTTER PER THE CITY'S STD NO. 200.
4. CONSTRUCT SIDEWALK, WIDTH PER PLAN, PER THE CITY'S STD NO. 325.
11. CONSTRUCT A1-6(150) CURB PER SPPWC STD NO. 120-2.
14. CONSTRUCT MSE WALL, SEE STRUCTURAL PLANS.
19. COLDMILL 2" MIN AND OVERLAY 2" MIN AC.
22. CONSTRUCT 3" ASPHALT CONCRETE OVER 7" CRUSHED AGGREGATE BASE.
30. CONSTRUCT HARDSCAPE, WIDTH PER PLAN, PER DETAIL 6 ON SHEET C-11.

NOTE: SEE STRIPING PLANS FOR STRIPING DETAIL

REGISTERED PROFESSIONAL ENGINEER JAQUAN TIMOTHY LEE No. C-75045 Exp. 12/31/2015 CIVIL STATE OF CALIFORNIA

AS-BUILT
08/01/14

Don't Dig...Until You Call U.S.A. Toll Free 1-800-227-2600 for the location of buried utility lines. Don't disrupt vital services.
TWO WORKING DAYS BEFORE YOU DIG

PLANS PREPARED BY:
AECOM
901 VIA PIEMONTE, 5TH FLOOR
ONTARIO, CA 91764
(909) 579-3050

REGISTERED PROFESSIONAL ENGINEER JAMES M. FARRAR No. C 45669 Exp. 12-12 CIVIL STATE OF CALIFORNIA

MARK	REVISIONS	APPR	DATE
AS-BUILT	ADDED TOTAL SHEET COUNT		8/1/14

DESIGN BY TL DRAWN BY MO CHECKED BY BMS

IOWA AVENUE
GRADE SEPARATION

TYPICAL SECTIONS

DWG NO. R-4237
X-01
SHEET 06 OF 133

SCALE: AS SHOWN

AS-BUILTS

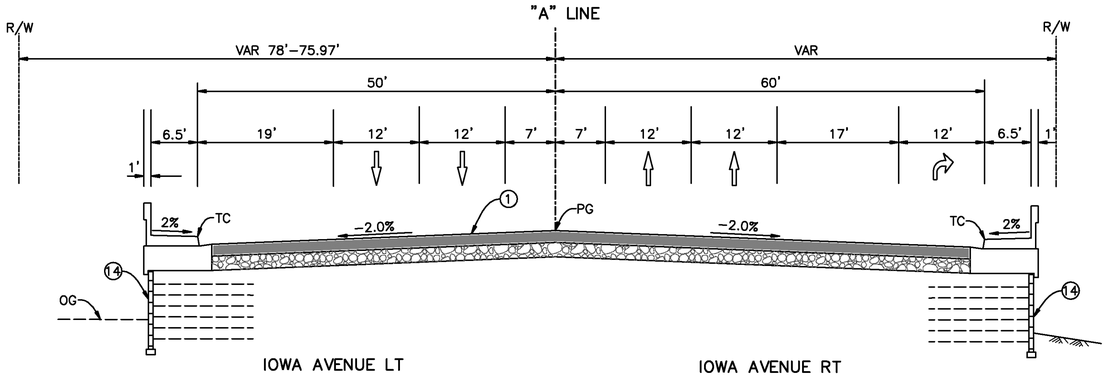

IOWA AVENUE LT

STA 205+42.93 TO STA 206+75.90 "A" LINE

NO SCALE

IOWA AVENUE RT

STA 205+81.25 TO STA 207+00.44 "A" LINE

NO SCALE

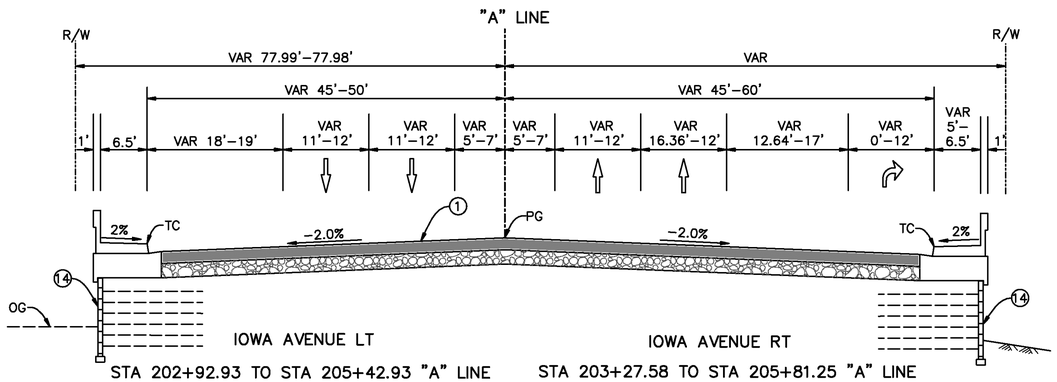

IOWA AVENUE LT

STA 202+92.93 TO STA 205+42.93 "A" LINE

NO SCALE

IOWA AVENUE RT

STA 203+27.58 TO STA 205+81.25 "A" LINE

NO SCALE

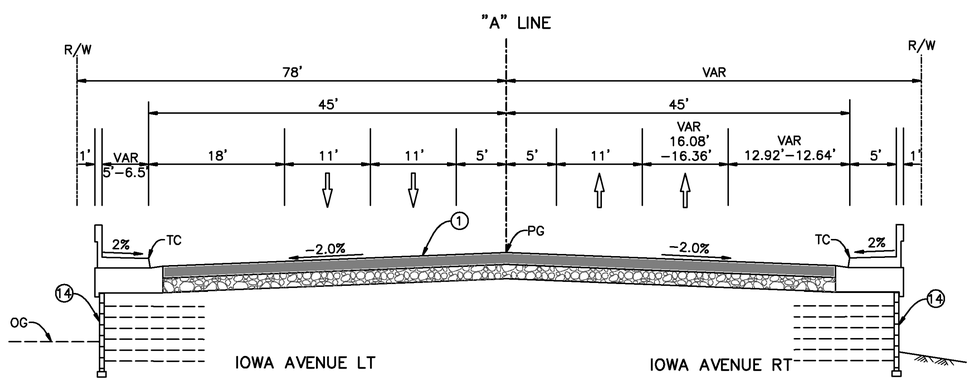

IOWA AVENUE LT

STA 202+02.67 TO STA 202+92.93 "A" LINE

NO SCALE

IOWA AVENUE RT

STA 203+24.74 TO STA 203+27.58 "A" LINE

NO SCALE

STA 196+89.00 TO STA 202+02.67
SEE STRUCTURE PLANS

STA 198+11.08 TO STA 203+24.74
SEE STRUCTURE PLANS

REGISTERED PROFESSIONAL ENGINEER HAOYUAN TIMOTHY LIU No. C-75045 Exp. 12/31/2015 CIVIL STATE OF CALIFORNIA

AS-BUILT
08/01/14

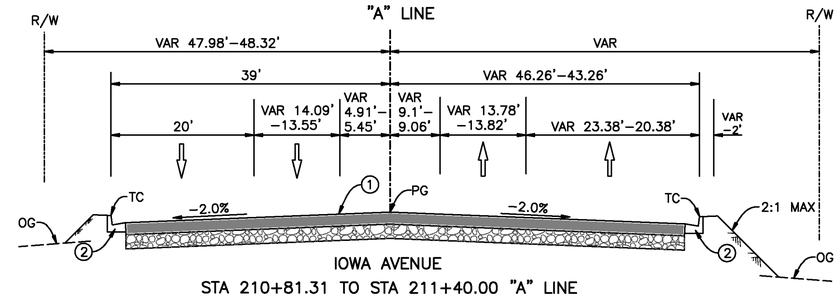

IOWA AVENUE

STA 210+81.31 TO STA 211+40.00 "A" LINE

NO SCALE

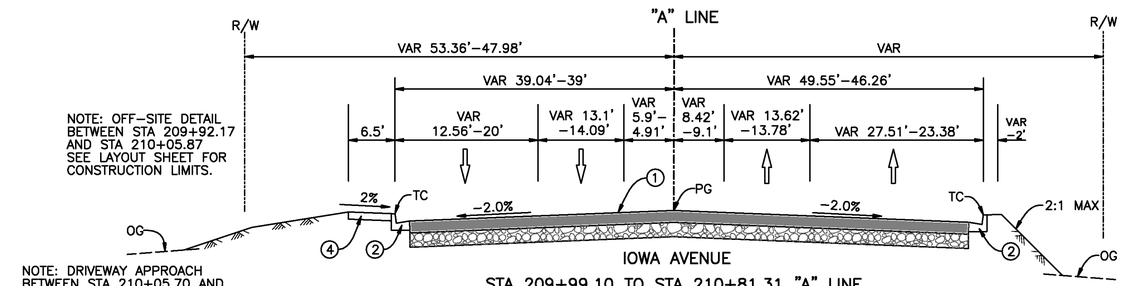

NOTE: OFF–SITE DETAIL BETWEEN STA 209+92.17 AND STA 210+05.87 SEE LAYOUT SHEET FOR CONSTRUCTION LIMITS.

NOTE: DRIVEWAY APPROACH BETWEEN STA 210+05.70 AND STA 210+81.31. SEE LAYOUT FOR CONSTRUCTION LIMITS.

IOWA AVENUE

STA 209+99.10 TO STA 210+81.31 "A" LINE

NO SCALE

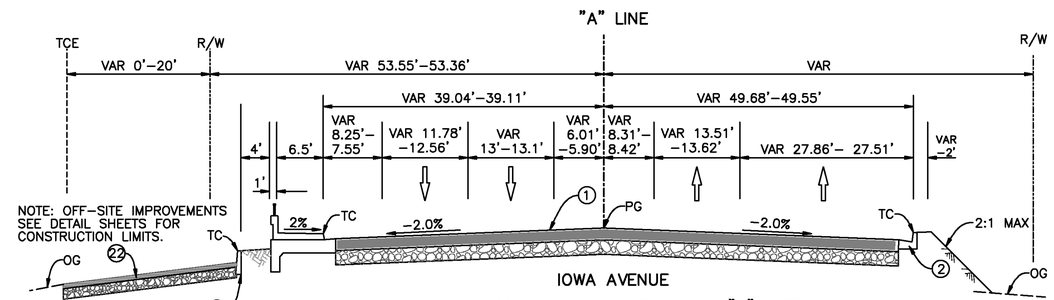

NOTE: OFF–SITE IMPROVEMENTS SEE DETAIL SHEETS FOR CONSTRUCTION LIMITS.

IOWA AVENUE

STA 209+92.18 TO STA 209+99.10 "A" LINE

NO SCALE

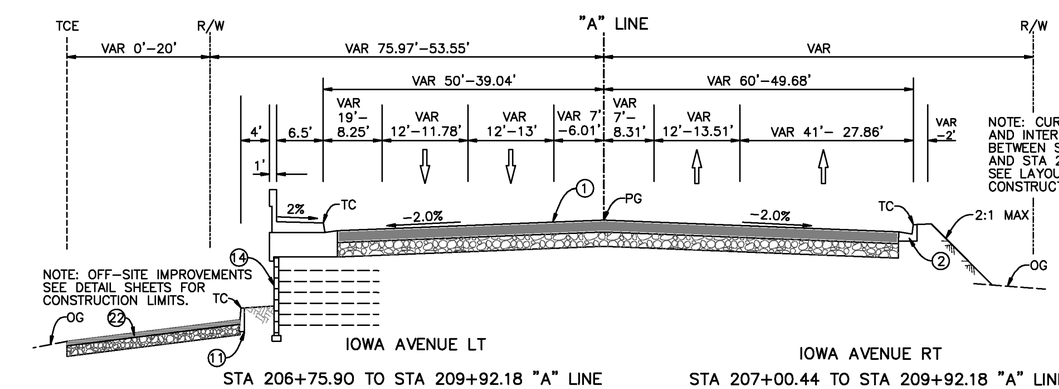

NOTE: CURB RETURN AND INTERSECTION BETWEEN STA 207+00.44 AND STA 208+40.41 SEE LAYOUT FOR CONSTRUCTION LIMITS.

NOTE: OFF–SITE IMPROVEMENTS SEE DETAIL SHEETS FOR CONSTRUCTION LIMITS.

IOWA AVENUE LT

STA 206+75.90 TO STA 209+92.18 "A" LINE

NO SCALE

IOWA AVENUE RT

STA 207+00.44 TO STA 209+92.18 "A" LINE

NO SCALE

CONSTRUCTION NOTES:

1. CONSTRUCT 8" ASPHALT CONCRETE OVER 16" CRUSHED AGGREGATE BASE.
2. CONSTRUCT 8" TYPE I CURB & GUTTER PER THE CITY'S STD NO. 200.
4. CONSTRUCT SIDEWALK, WIDTH PER PLAN, PER THE CITY'S STD NO. 325.
11. CONSTRUCT A1–6(150) CURB PER SPPWC STD NO. 120–2.
14. CONSTRUCT MSE WALL, SEE STRUCTURAL PLANS.
22. CONSTRUCT 3" ASPHALT CONCRETE OVER 7" CRUSHED AGGREGATE BASE.

NOTE: SEE STRIPING PLANS FOR STRIPING DETAIL

Don't Dig...Until You Call U.S.A. Toll Free
1-800-227-2600
for the location of buried utility lines.
Don't disrupt vital services.
TWO WORKING DAYS BEFORE YOU DIG

PLANS PREPARED BY:
AECOM
901 VIA PIEMONTE, 5TH FLOOR
ONTARIO, CA 91764
(909) 579-3050

REGISTERED PROFESSIONAL ENGINEER JAMES M. FARRIS No. C 45662 Exp. 12-12 CIVIL STATE OF CALIFORNIA

MARK	REVISIONS	APPR	DATE
AS-BUILT	ADDED TOTAL SHEET COUNT		8/1/14

DESIGN BY TL DRAWN BY MO CHECKED BY BMS

IOWA AVENUE
GRADE SEPARATION

TYPICAL SECTIONS

DWG NO. R–4237
X-02
SHEET 07 OF 133

SCALE: AS SHOWN

AS–BUILTS

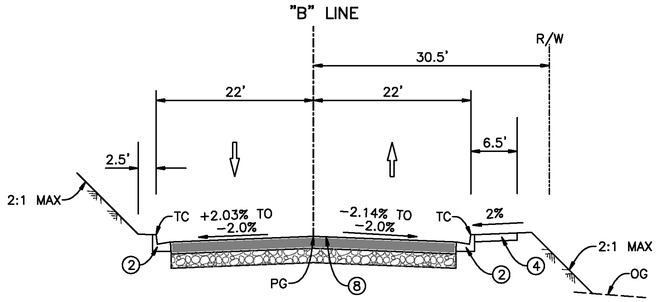

E CITRUS ST LT
STA 12+23.28 TO STA 14+25.00 "B" LINE
NO SCALE

E CITRUS ST RT
STA 12+17.79 TO STA 14+25.00 "B" LINE
NO SCALE

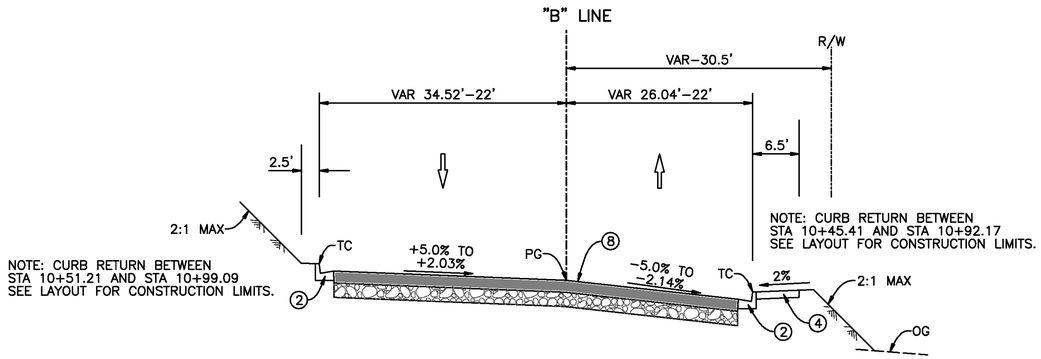

E CITRUS ST LT
STA 10+99.09 TO STA 12+23.28 "B" LINE
NO SCALE

E CITRUS ST RT
STA 10+92.17 TO STA 12+17.79 "B" LINE
NO SCALE

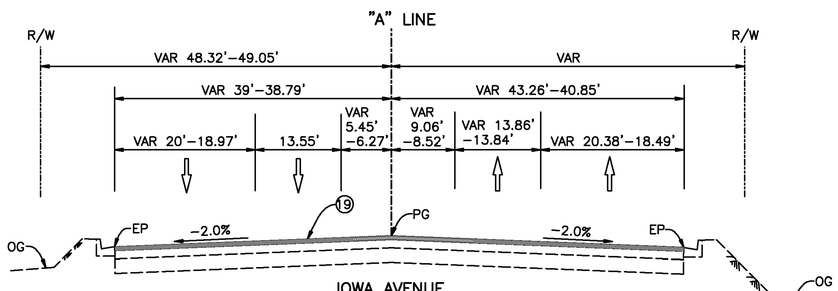

IOWA AVENUE
STA 211+40.00 TO STA 211+70.00 "A" LINE
NO SCALE

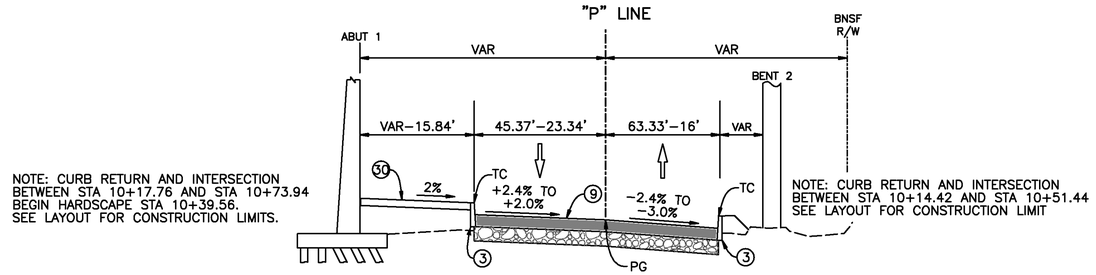

ACCESS RD LT
STA 10+17.76 TO STA 11+25.00
NO SCALE

ACCESS RD RT
STA 10+14.42 TO STA 11+25.00 "C" LINE
NO SCALE

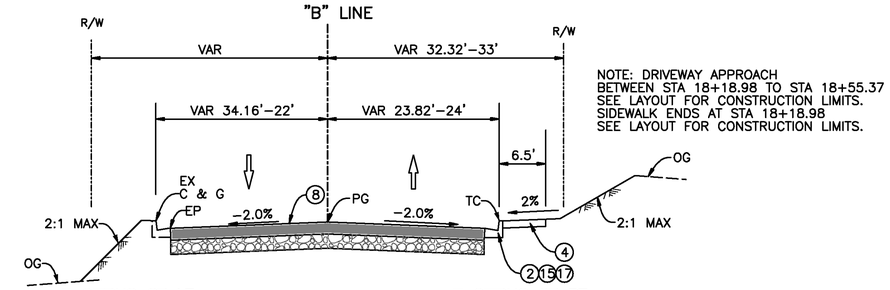

E CITRUS ST LT
STA 16+99.70 TO STA 18+82.57 "B" LINE
NO SCALE

E CITRUS ST RT
STA 16+99.70 TO STA 18+82.57 "B" LINE
NO SCALE

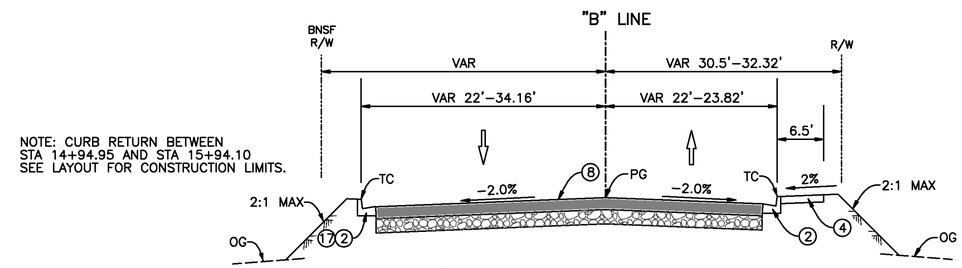

E CITRUS ST LT
STA 14+76.01 TO STA 16+99.70 "B" LINE
NO SCALE

E CITRUS ST RT
STA 14+72.05 TO STA 16+99.70 "B" LINE
NO SCALE

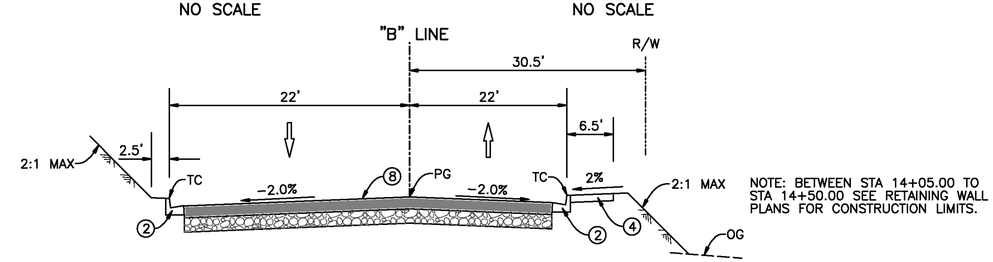

E CITRUS ST LT
STA 14+25.00 TO STA 14+76.01 "B" LINE
NO SCALE

E CITRUS ST RT
STA 14+25.00 TO STA 14+72.05 "B" LINE
NO SCALE

REGISTERED PROFESSIONAL ENGINEER
HAONLAY "TIMOTHY" LIU
No. C-75045
Exp. 12/31/2015
CIVIL
STATE OF CALIFORNIA

AS-BUILT
08/01/14

CONSTRUCTION NOTES:

(2) CONSTRUCT 8" TYPE I CURB & GUTTER PER THE CITY'S STD NO. 200.
(3) CONSTRUCT 8" TYPE II CURB PER THE CITY'S STD NO. 200.
(4) CONSTRUCT SIDEWALK, WIDTH PER PLAN, PER THE CITY'S STD NO. 325.
(8) CONSTRUCT 7" ASPHALT CONCRETE OVER 12" CRUSHED AGGREGATE BASE.
(9) CONSTRUCT 5" HOT MIX ASPHALT OVER 10" CRUSHED AGGREGATE BASE.
(15) CONSTRUCT 6" TYPE I CURB & GUTTER PER THE CITY'S STD NO. 200.
(17) CONSTRUCT C&G TRANSITION PER DETAIL 1 ON SHEET C-06.
(19) COLDMILL 2" MIN AND OVERLAY 2" MIN AC.
(30) CONSTRUCT HARDSCAPE, WIDTH PER PLAN, PER DETAIL 6 ON SHEET C-11.

NOTE: SEE STRIPING PLANS FOR STRIPING DETAIL

Don't Dig...Until You Call U.S.A. Toll Free
1-800-227-2600
for the location of buried utility lines.
Don't disrupt vital services.
TWO WORKING DAYS BEFORE YOU DIG

PLANS PREPARED BY:
AECOM
901 VIA PIEMONTE, 5TH FLOOR
ONTARIO, CA 91764
(909) 579-3050

REGISTERED PROFESSIONAL ENGINEER
JAMES M. FARRAR
No. C 45668
Exp. 12-12
CIVIL
STATE OF CALIFORNIA

MARK	REVISIONS	APPR	DATE
AS-BUILT	ADDED TOTAL SHEET COUNT		8/1/14

DESIGN BY TL DRAWN BY MO CHECKED BY BMS

IOWA AVENUE
GRADE SEPARATION

TYPICAL SECTIONS

DWG NO. R-4237
X-03
SHEET 08 OF 133
SCALE: AS SHOWN

AS-BUILTS

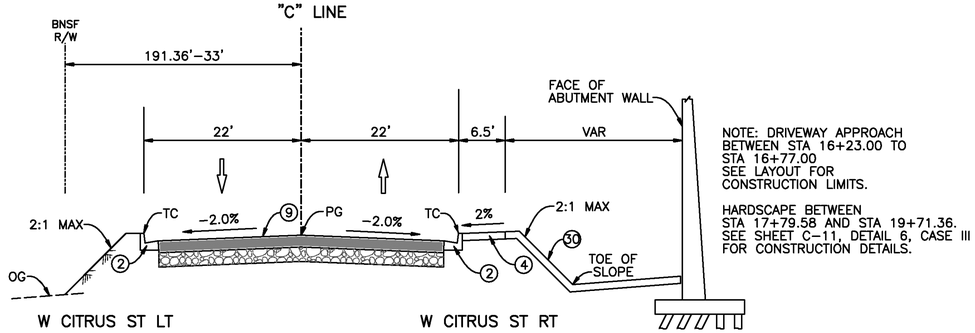

W CITRUS ST LT
STA 12+55.00 TO STA 18+78.58 "C" LINE
NO SCALE

W CITRUS ST RT
STA 14+55.00 TO STA 18+78.58 "C" LINE
NO SCALE

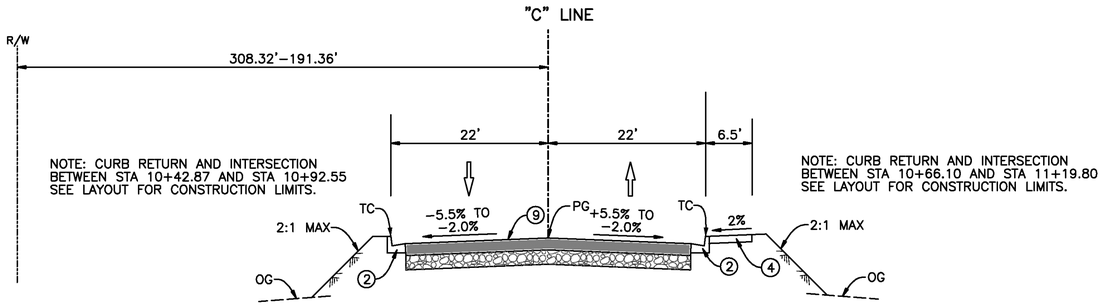

W CITRUS ST LT
STA 10+92.55 TO STA 12+55.00 "C" LINE
NO SCALE

W CITRUS ST RT
STA 11+19.80 TO STA 14+55.00 "C" LINE
NO SCALE

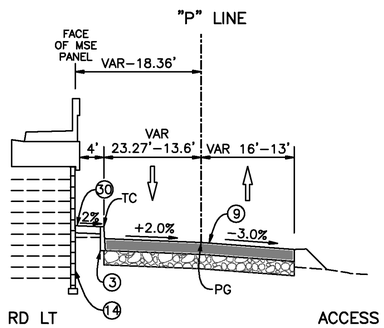

ACCESS RD LT
STA 11+25.00 TO STA 13+00.00
NO SCALE

ACCESS RD RT
STA 11+40.00 TO STA 13+00.00 "C" LINE
NO SCALE

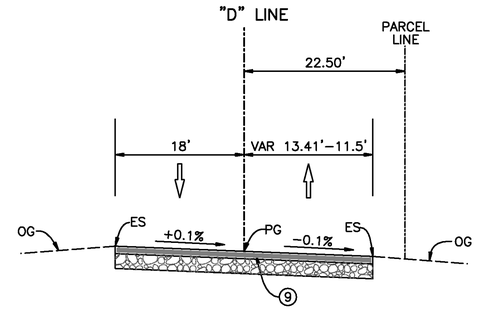

SOUTH RAMP LT
STA 6+59.78 TO STA 7+09.91 "D" LINE
NO SCALE

SOUTH RAMP RT
STA 6+59.78 TO STA 6+75.00 "D" LINE
NO SCALE

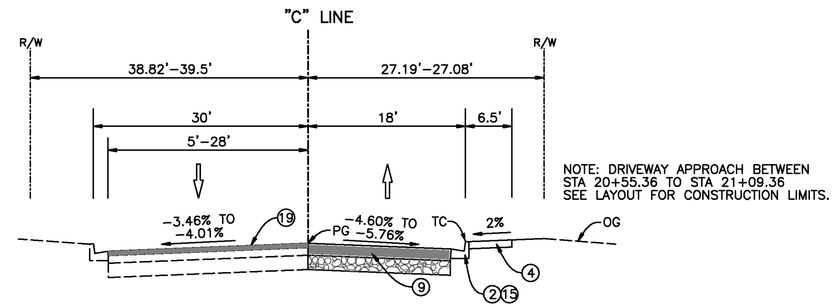

W CITRUS ST LT
STA 20+47.32 TO STA 21+09.36 "C" LINE
NO SCALE

W CITRUS ST RT
STA 20+53.85 TO STA 21+09.36 "C" LINE
NO SCALE

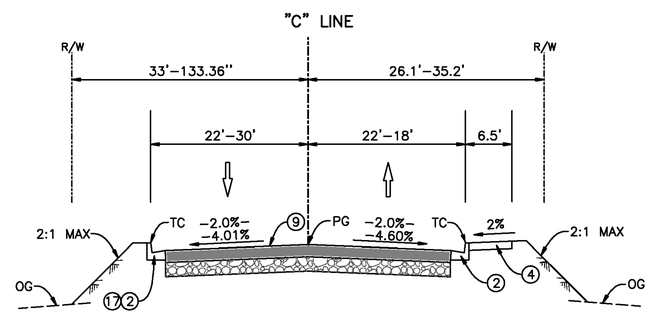

W CITRUS ST LT
STA 18+78.58 TO STA 20+47.32 "C" LINE
NO SCALE

W CITRUS ST RT
STA 18+78.58 TO STA 20+53.85 "C" LINE
NO SCALE

CONSTRUCTION NOTES:

2. CONSTRUCT 8" TYPE I CURB & GUTTER PER THE CITY'S STD NO. 200.
3. CONSTRUCT 8" TYPE II CURB PER THE CITY'S STD NO. 200.
4. CONSTRUCT SIDEWALK, WIDTH PER PLAN, PER THE CITY'S STD NO. 325.
9. CONSTRUCT 5" ASPHALT CONCRETE OVER 10" CRUSHED AGGREGATE BASE.
14. CONSTRUCT MSE WALL, SEE STRUCTURAL PLANS.
15. CONSTRUCT 6" TYPE I CURB & GUTTER PER THE CITY'S STD NO. 200.
17. CONSTRUCT C&G TRANSITION PER DETAIL 1 ON SHEET C–06.
19. COLDMILL 2" MIN AND OVERLAY 2" MIN AC.
50. CONSTRUCT HARDSCAPE, WIDTH PER PLAN, PER DETAIL 6 ON SHEET C–11.

REGISTERED PROFESSIONAL ENGINEER HAOYUAN TIMOTHY LIU No. C-75045 Exp. 12/31/2015 CIVIL STATE OF CALIFORNIA

AS-BUILT
08/01/14

Don't Dig...Until You Call U.S.A. Toll Free
1-800-227-2600
for the location of buried utility lines.
Don't disrupt vital services.
TWO WORKING DAYS BEFORE YOU DIG

PLANS PREPARED BY:
AECOM
901 VIA PIEMONTE, 5TH FLOOR
ONTARIO, CA 91764
(909) 579-3050

REGISTERED PROFESSIONAL ENGINEER JAMES M. FARRAR No. C 45663 Exp. 12-12 CIVIL STATE OF CALIFORNIA

MARK	REVISIONS	APPR	DATE
AS-BUILT	ADDED TOTAL SHEET COUNT		8/1/14

DESIGN BY TL DRAWN BY MO CHECKED BY BMS

IOWA AVENUE
GRADE SEPARATION

TYPICAL SECTIONS

DWG NO. R-4237
X-04
SHEET 09 OF 133
SCALE: AS SHOWN

AS–BUILTS

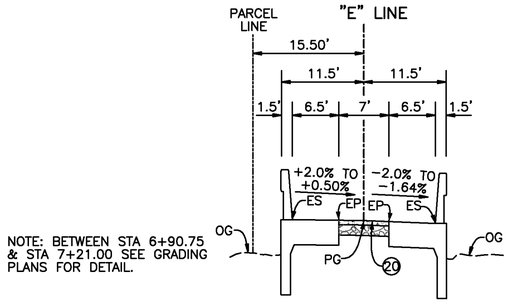

NOTE: BETWEEN STA 6+90.75 & STA 7+21.00 SEE GRADING PLANS FOR DETAIL.

NORTH RAMP LT
STA 7+21.00 TO STA 7+85.67 "E" LINE
NO SCALE

NORTH RAMP RT
STA 7+21.00 TO STA 7+58.61 "E" LINE
NO SCALE

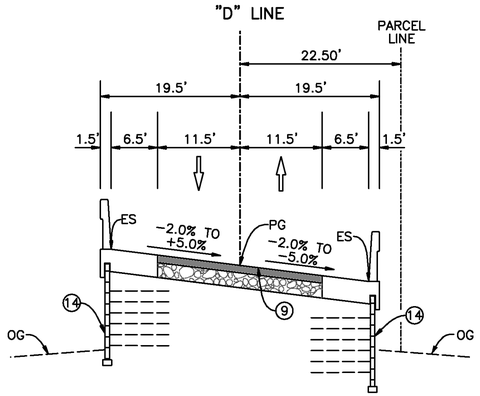

SOUTH RAMP LT
STA 8+01.00 TO STA 9+44.20 "D" LINE
NO SCALE

SOUTH RAMP RT
STA 8+01.00 TO STA 9+43.04 "D" LINE
NO SCALE

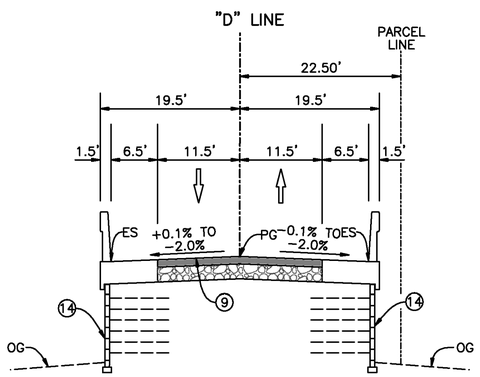

SOUTH RAMP LT
STA 7+09.91 TO STA 8+01.00 "D" LINE
NO SCALE

SOUTH RAMP RT
STA 6+75.00 TO STA 8+01.00 "D" LINE
NO SCALE

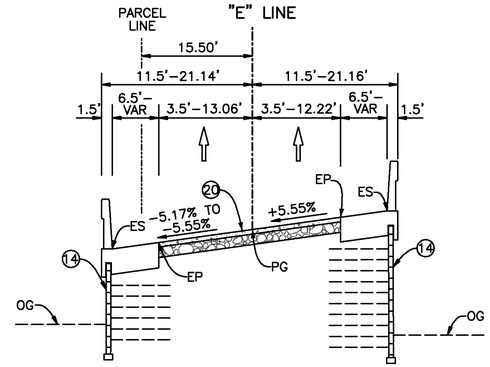

NORTH RAMP
STA 9+22.17 TO STA 9+44.30 "E" LINE
NO SCALE

NORTH RAMP
STA 9+30.55 TO STA 9+45.73 "E" LINE
NO SCALE

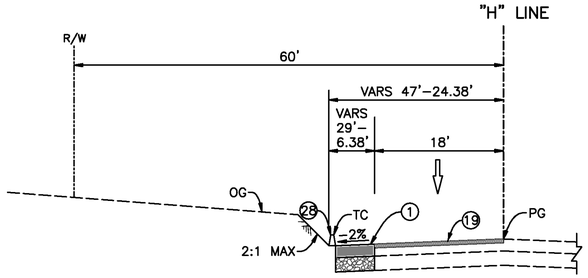

PALMYRITA AVE
STA 11+84.65 TO STA 12+85.26
NO SCALE

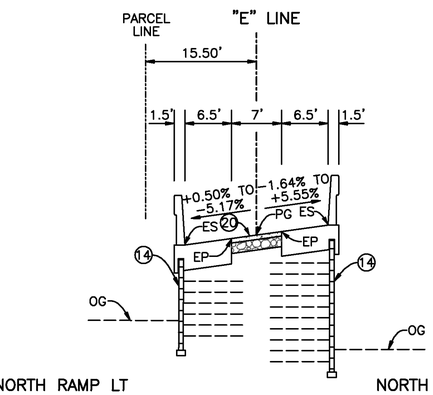

NORTH RAMP LT
STA 7+85.67 TO STA 9+22.17 "E" LINE
NO SCALE

NORTH RAMP RT
STA 7+58.61 TO STA 9+30.55 "E" LINE
NO SCALE

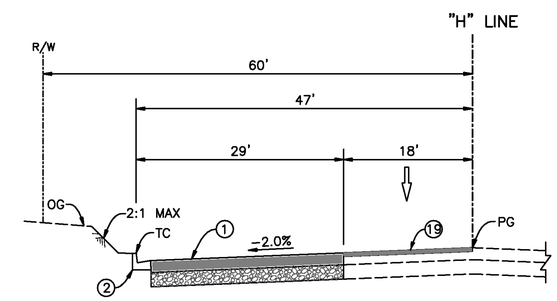

NOTE: CURB RETURN BETWEEN STA 9+14.57 TO STA 10+84.65 SEE LAYOUT FOR CONSTRUCTION LIMITS.

PALMYRITA AVE
STA 10+84.65 TO STA 11+84.65
NO SCALE

CONSTRUCTION NOTES:

1. CONSTRUCT 8" ASPHALT CONCRETE OVER 16" CRUSHED AGGREGATE BASE.
2. CONSTRUCT 8" TYPE I CURB & GUTTER PER THE CITY'S STD NO. 200.
9. CONSTRUCT 5" ASPHALT CONCRETE OVER 10" CRUSHED AGGREGATE BASE.
14. CONSTRUCT MSE WALL, SEE STRUCTURAL PLANS.
19. COLDMILL 2" MIN AND OVERLAY 2" MIN AC.
20. CONSTRUCT 3" PCC PAVEMENT OVER 7" CRUSHED AGGREGATE BASE.
28. INSTALL 6" ASPHALT CONCRETE BERM TYPE I PER THE CITY'S STD NO. 250.

NOTE: SEE STRIPING PLANS FOR STRIPING DETAIL

REGISTERED PROFESSIONAL ENGINEER HAOYUAN "TIMOTHY" LIU No. C-75045 Exp. 12/31/2015 CIVIL STATE OF CALIFORNIA

AS-BUILT
08/01/14

Don't Dig...Until You Call U.S.A. Toll Free
1-800-227-2600
for the location of buried utility lines.
Don't disrupt vital services.
TWO WORKING DAYS BEFORE YOU DIG

PLANS PREPARED BY:
AECOM
901 VIA PIEMONTE, 5TH FLOOR
ONTARIO, CA 91764
(909) 579-3050

REGISTERED PROFESSIONAL ENGINEER JAMES M. FARRAR No. C 45663 Exp. 12-12 CIVIL STATE OF CALIFORNIA

MARK	REVISIONS	APPR	DATE
AS-BUILT	ADDED TOTAL SHEET COUNT		8/1/14

DESIGN BY TL DRAWN BY MO CHECKED BY BMS

IOWA AVENUE
GRADE SEPARATION

TYPICAL SECTIONS

DWG NO. R-4237
X-05
SHEET 10 OF 133
SCALE: AS SHOWN

AS-BUILTS

CONSTRUCTION NOTES:

1. CONSTRUCT 8" ASPHALT CONCRETE OVER 16" CRUSHED AGGREGATE BASE.
2. CONSTRUCT 8" TYPE I CURB & GUTTER PER THE CITY'S STD NO. 200.
4. CONSTRUCT SIDEWALK, WIDTH PER PLAN, PER THE CITY'S STD NO. 325.
5. CONSTRUCT WHEELCHAIR RAMP (TYPE I) PER THE CITY'S STD NO. 304.
6. CONSTRUCT WHEELCHAIR RAMP (TYPE II) PER THE CITY'S STD NO. 304.
9. CONSTRUCT 5" ASPHALT CONCRETE OVER 10" CRUSHED AGGREGATE BASE.
9A. CONSTRUCT 8" PCC OVER 7" CRUSHED AGGREGATE BASE. AS-BUILTS
10. CONSTRUCT CROSS GUTTER PER THE CITY'S STD NO. 220.
11. CONSTRUCT A1-6 CURB PER APWA STD NO. 120-2.
12. CONSTRUCT WHEELCHAIR RAMP (TYPE III) PER THE CITY'S STD NO. 304.
14. CONSTRUCT MSE WALL, SEE STRUCTURAL PLANS.
19. COLDMILL 2" MIN AND OVERLAY 2" MIN AC.

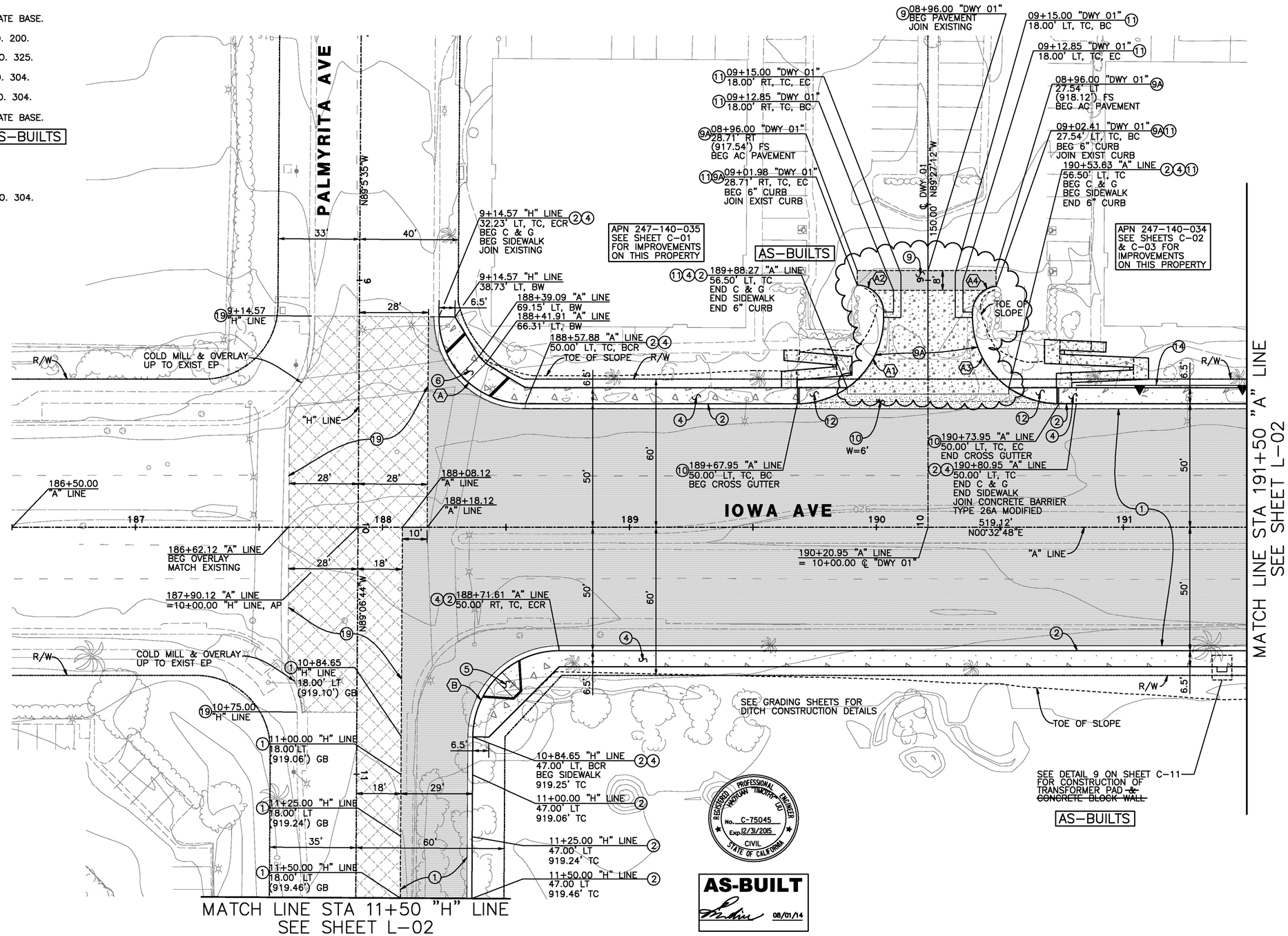

LEGEND:

- NEW ASPHALT CONCRETE
- COLDMILL & OVERLAY
- PCC SIDEWALK
- CROSS GUTTER

CURVE DATA				
	DELTA	RADIUS	LENGTH	TANGENT
A	90°22'27"	35.00'	55.21'	35.23'
B	89°53'15"	35.00'	54.91'	34.93'
A1	90°00'00"	35.00'	54.98'	35.00'
A2	88°43'16"	10.96'	16.97'	10.72'
A3	90°00'00"	35.00'	54.98'	35.00'
A4	84°53'34"	10.47'	15.52'	9.58'

0 10 20 40 60 80

SCALE: 1" = 20'

REGISTERED PROFESSIONAL ENGINEER HARTLAN TIMOTHY LEE No. C-75045 Exp. 12/31/2015 CIVIL STATE OF CALIFORNIA

AS-BUILT
08/01/14

Don't Dig...Until You Call U.S.A. Toll Free
1-800-227-2600
for the location of buried utility lines.
Don't disrupt vital services.
TWO WORKING DAYS BEFORE YOU DIG

PLANS PREPARED BY:
AECOM
901 VIA PIEMONTE, 5TH FLOOR
ONTARIO, CA 91764
(909) 579-3050

REGISTERED PROFESSIONAL ENGINEER JAMES M FARRIS No. C 55662 Exp. 12-12 CIVIL STATE OF CALIFORNIA

MARK	REVISIONS	APPR	DATE
AS-BUILT	CHANGED AC PVMT TO PCC PVMT		8/1/14
	REVISED PVMT LIMITS		
	DELETED BLOCK WALL FOR		
	TRANSFORMER PAD		
	ADDED TOTAL SHEET COUNT		

DESIGN BY TL DRAWN BY TL CHECKED BY BMS

IOWA AVENUE
GRADE SEPARATION

LAYOUT

DWG NO. R-4237
L-01
SHEET 11 OF 133
SCALE: AS SHOWN

AS-BUILTS

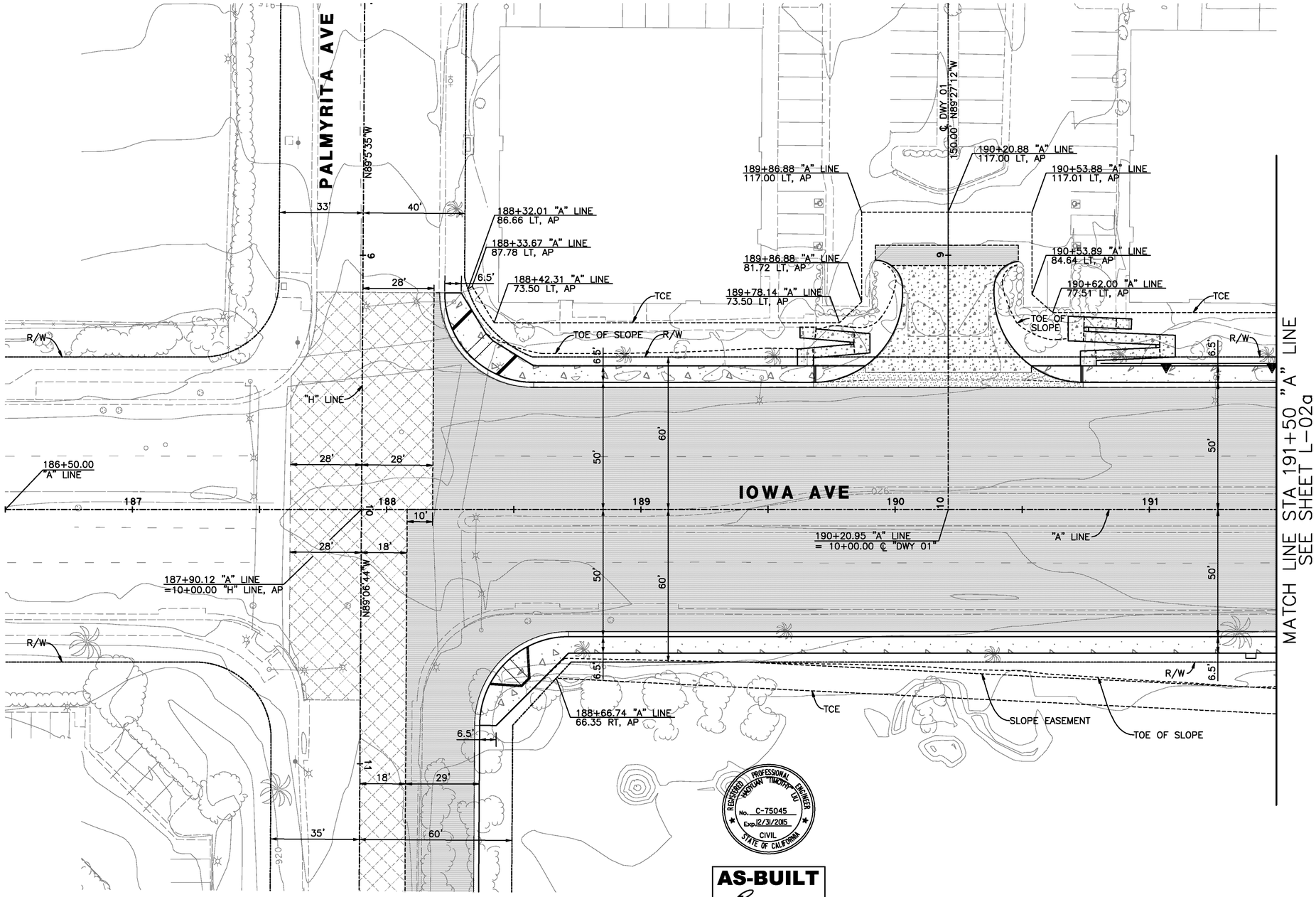

REGISTERED PROFESSIONAL ENGINEER
JAGDEAN TIMOTHY TAO
No. C-75045
Exp. 12/31/2015
CIVIL
STATE OF CALIFORNIA

AS-BUILT
08/01/14

0 10 20 40 60 80
SCALE: 1" = 20'

Don't Dig...Until You Call U.S.A. Toll Free
1-800-227-2600
for the location of buried utility lines.
Don't disrupt vital services.
TWO WORKING DAYS BEFORE YOU DIG

PLANS PREPARED BY:
AECOM
901 VIA PIEMONTE, 5TH FLOOR
ONTARIO, CA 91764
(909) 579-3050

REGISTERED PROFESSIONAL ENGINEER
JAMES M. FARRIER
No. C-55661
Exp. 12-12
CIVIL
STATE OF CALIFORNIA

MARK	REVISIONS	APPR	DATE
7	ADDENDUM NO.3		5/9/12
	NEW SHEET TO DISPLAY TCE		
AS-BUILT	ADDED TOTAL SHEET COUNT		8/1/14

DESIGN BY TL DRAWN BY TL CHECKED BY BMS

IOWA AVENUE
GRADE SEPARATION

LAYOUT
TCE LIMITS

DWG NO. R-4237
L-01a
SHEET 11a OF 133
SCALE: AS SHOWN

AS-BUILTS

CONSTRUCTION NOTES:

1. CONSTRUCT 8" ASPHALT CONCRETE OVER 16" CRUSHED AGGREGATE BASE.
2. CONSTRUCT 8" TYPE I CURB & GUTTER PER THE CITY'S STD NO. 200.
4. CONSTRUCT SIDEWALK, WIDTH PER PLAN, PER THE CITY'S STD NO. 325.
7. CONSTRUCT DRIVEWAY APPROACH PER THE CITY'S STD NO. 302.
9. CONSTRUCT 5" ASPHALT CONCRETE OVER 10" CRUSHED AGGREGATE BASE.
13. INSTALL CHAIN LINK FENCE PER THE CITY'S STD NO. 380. (2)
14. CONSTRUCT MSE WALL, SEE STRUCTURAL PLANS.
19. COLDMILL 2" MIN AND OVERLAY 2" MIN AC.
28. INSTALL 6" ASPHALT CONCRETE BERM TYPE I PER THE CITY'S STD NO. 250.
36. CONSTRUCT REVERSE TAPER PER THE CITY'S STD NO. 122.
38. INSTALL AUTOMATIC SWING GATE PER DETAIL ON SHEET C-13. (2)

LEGEND:

- NEW ASPHALT CONCRETE
- COLDMILL & OVERLAY
- PCC SIDEWALK

CURVE DATA				
	DELTA	RADIUS	LENGTH	TANGENT
C	06°08'50"	2000.00'	214.58'	107.39'

REGISTERED PROFESSIONAL ENGINEER HOOYUNG TIMOTHY LIU No. C-75045 Exp. 12/31/2015 CIVIL STATE OF CALIFORNIA

AS-BUILT 08/01/14

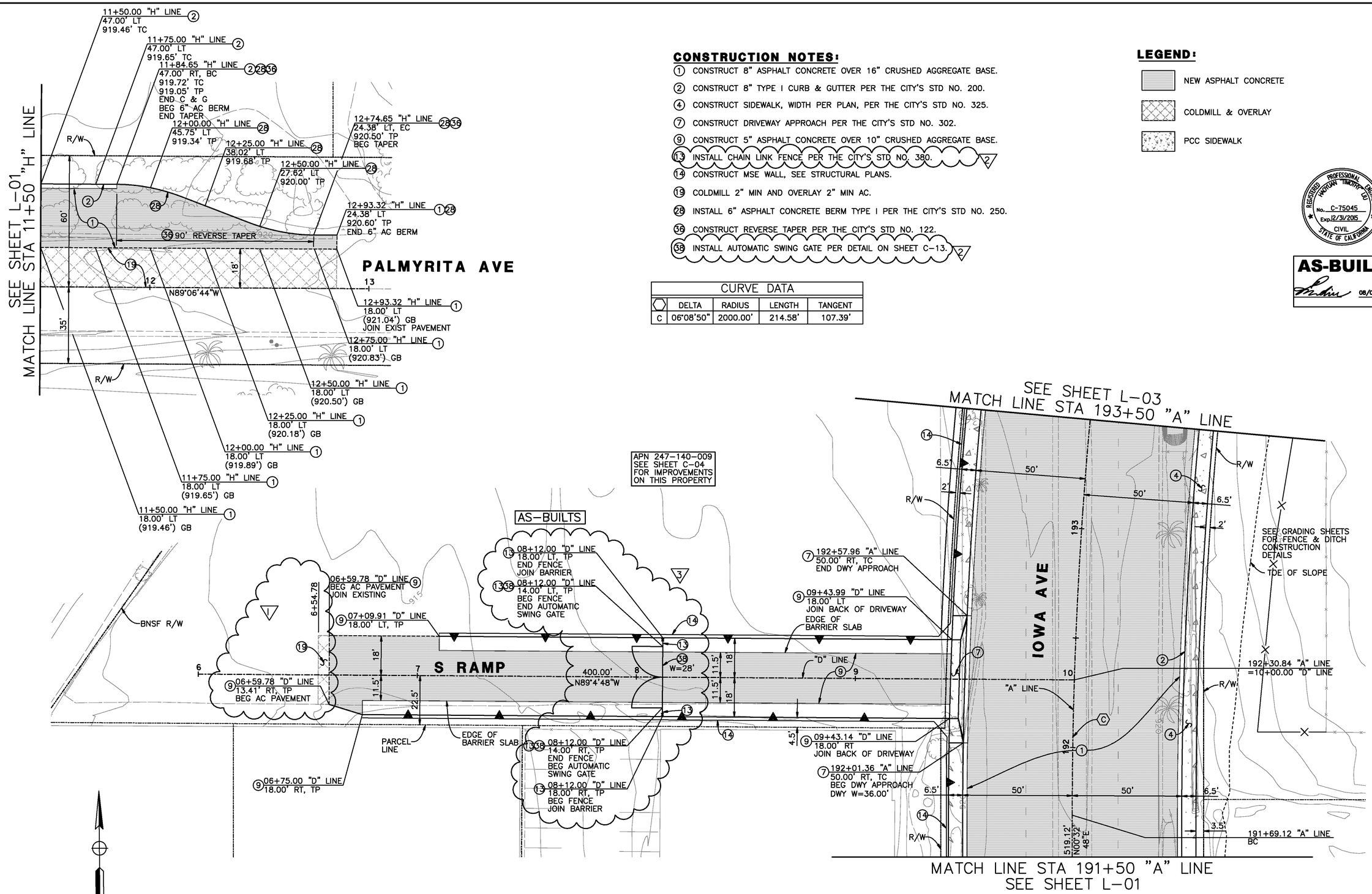

0 10 20 40 60 80
SCALE: 1" = 20'

MARK	ADDITIONAL REVISIONS	DATE
3	RELOCATED AUTOMATIC SWING GATE AND CHAIN LINK FENCE AT SOUTH RAMP; REDUCED GATE TO 28' WIDE	10/31/12
AS-BUILT	REVISED SWING GATE LOCATION, ADDED TOTAL SHEET COUNT	8/1/14

Don't Dig...Until You Call U.S.A. Toll Free 1-800-227-2600 for the location of buried utility lines. Don't disrupt vital services.
TWO WORKING DAYS BEFORE YOU DIG

PLANS PREPARED BY:
AECOM
901 VIA PIEMONTE, 5TH FLOOR
ONTARIO, CA 91764
(909) 579-3050

REGISTERED PROFESSIONAL ENGINEER JAMES M. FARRAR No. C-55662 Exp. 12-2 CIVIL STATE OF CALIFORNIA

MARK	REVISIONS	APPR	DATE
3	ADDENDUM NO.3		5/9/12
	MODIFIED COLDMILL & OVERLAY LIMIT AT SOUTH RAMP		
3	ADDED AUTOMATIC SWING GATE AND CHAIN LINK FENCE AT SOUTH RAMP		5/17/12
	ADDED NOTES 13 & 38 TO CONS NOTES		

DESIGN BY TL DRAWN BY TL CHECKED BY BMS

IOWA AVENUE GRADE SEPARATION

LAYOUT

DWG NO. R-4237
L-02
SHEET 12 OF 133
SCALE: AS SHOWN

AS-BUILTS

REGISTERED PROFESSIONAL ENGINEER
HOTUAN TIMOTHY LIU
No. C-75045
Exp. 12/31/2015
CIVIL
STATE OF CALIFORNIA

AS-BUILT
08/01/14

COURSE DATA

(1) R=2086.50' DELTA=02°12'26" L=80.38'
(2) R=2078.50' DELTA=02°07'09" L=76.88'

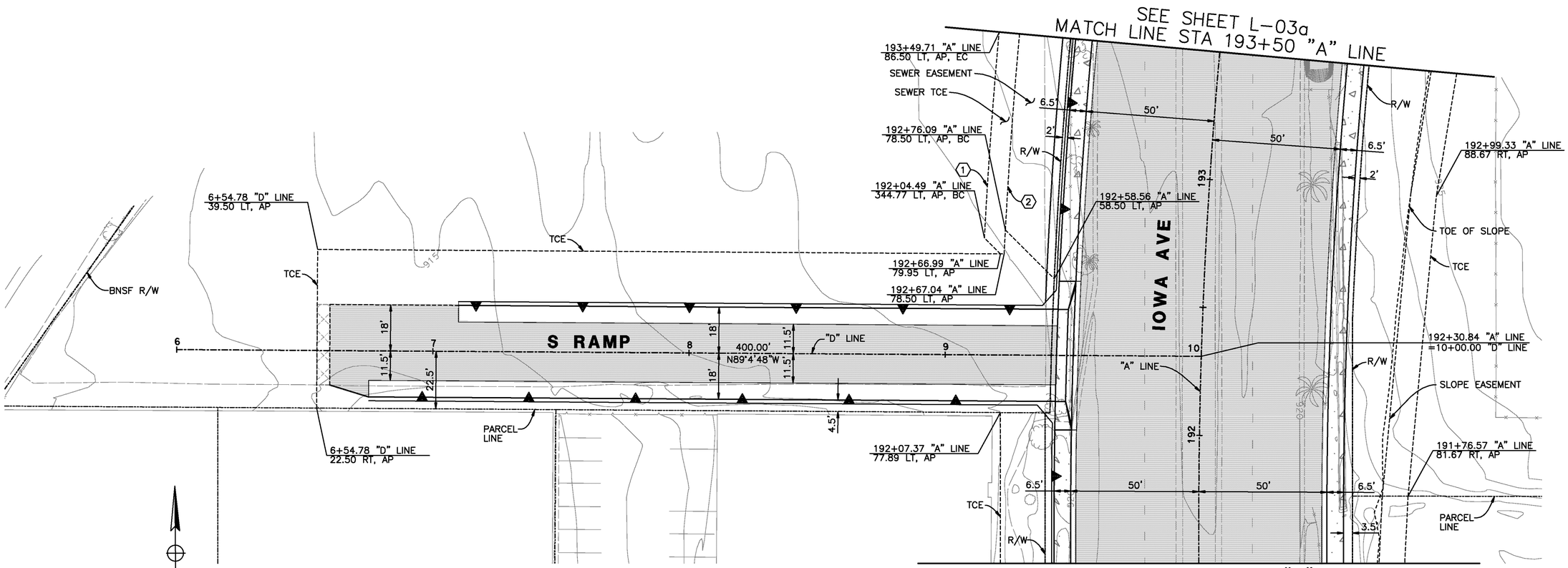

Don't Dig...Until You Call U.S.A. Toll Free
1-800-227-2600
for the location of buried utility lines.
Don't disrupt vital services.
TWO WORKING DAYS BEFORE YOU DIG

PLANS PREPARED BY:
AECOM
901 VIA PIEMONTE, 5TH FLOOR
ONTARIO, CA 91764
(909) 579-3050

REGISTERED PROFESSIONAL ENGINEER
JAMES M. FARRAR
No. C-55668
Exp. 12-31
CIVIL
STATE OF CALIFORNIA

MARK	REVISIONS	APPR	DATE
▽	ADDENDUM NO.3		5/9/12
	NEW SHEET TO DISPLAY TCE		
AS-BUILT	ADDED TOTAL SHEET COUNT		8/1/14

DESIGN BY TL DRAWN BY TL CHECKED BY BMS

IOWA AVENUE
GRADE SEPARATION

LAYOUT
TCE LIMITS

DWG NO. R-4237
L-02a
SHEET 12a OF 133

SCALE: AS SHOWN

AS-BUILTS

CONSTRUCTION NOTES:

1. CONSTRUCT 8" ASPHALT CONCRETE OVER 16" CRUSHED AGGREGATE BASE.
2. CONSTRUCT 8" TYPE I CURB & GUTTER PER THE CITY'S STD NO. 200.
4. CONSTRUCT SIDEWALK, WIDTH PER PLAN, PER THE CITY'S STD NO. 325.
5. CONSTRUCT WHEELCHAIR RAMP (TYPE I) PER THE CITY'S STD NO. 304.
8. CONSTRUCT 7" ASPHALT CONCRETE OVER 12" CRUSHED AGGREGATE BASE.
14. CONSTRUCT MSE WALL, SEE STRUCTURAL PLANS.

LEGEND:

- NEW ASPHALT CONCRETE
- PCC SIDEWALK

CURVE DATA				
	DELTA	RADIUS	LENGTH	TANGENT
C	06°08'50"	2000.00'	214.58'	107.39'
D	06°08'50"	2000.00'	214.58'	107.39'
E	83°10'23"	50.00'	72.58'	44.37'
F	194°21'55"	42.00'	142.48'	333.27'
G	01°34'57"	1950.00'	53.86'	26.93'
H	04°35'34"	1951.73'	156.45'	78.27'
I	105°30'40"	70.00'	128.91'	92.07'
J	103°23'46"	92.00'	166.02'	116.48'

0 10 20 40 60 80

SCALE: 1" = 20'

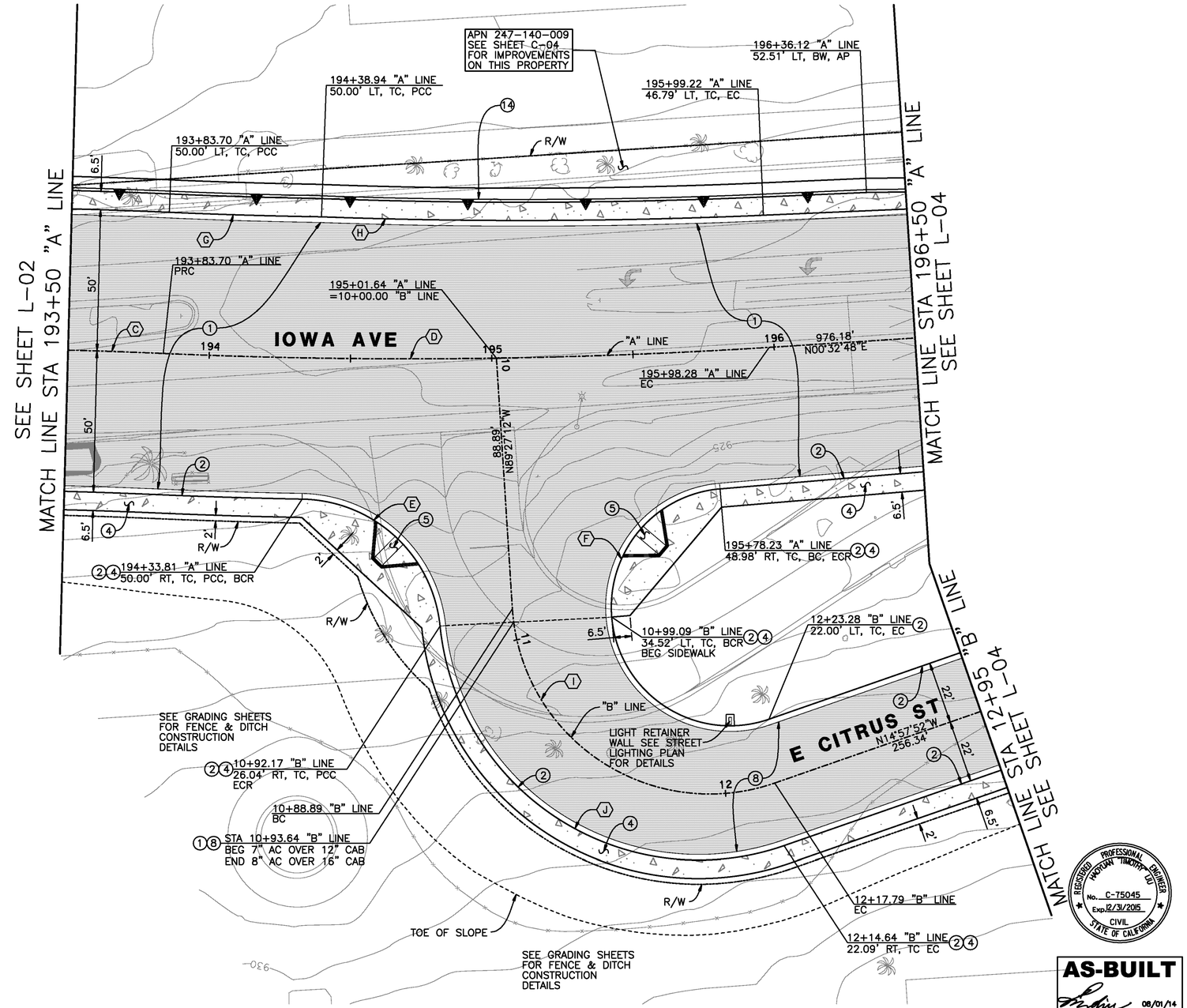

REGISTERED PROFESSIONAL ENGINEER HAOYUAN "TIMOTHY" LIU No. C-75045 Exp. 12/31/2015 CIVIL STATE OF CALIFORNIA

AS-BUILT
08/01/14

Don't Dig...Until You Call U.S.A. Toll Free
1-800-227-2600
for the location of buried utility lines.
Don't disrupt vital services.
TWO WORKING DAYS BEFORE YOU DIG

PLANS PREPARED BY:
AECOM
901 VIA PIEMONTE, 5TH FLOOR
ONTARIO, CA 91764
(909) 579-3050

REGISTERED PROFESSIONAL ENGINEER JAMES M FASCHINO No. C-56668 Exp. 12-31 CIVIL STATE OF CALIFORNIA

MARK	REVISIONS	APPR	DATE
AS-BUILT	ADDED TOTAL SHEET COUNT		8/1/14

DESIGN BY TL DRAWN BY TL CHECKED BY BMS

IOWA AVENUE
GRADE SEPARATION

LAYOUT

DWG NO. R-4237
L-03
SHEET 13 OF 133

SCALE: AS SHOWN

AS-BUILTS

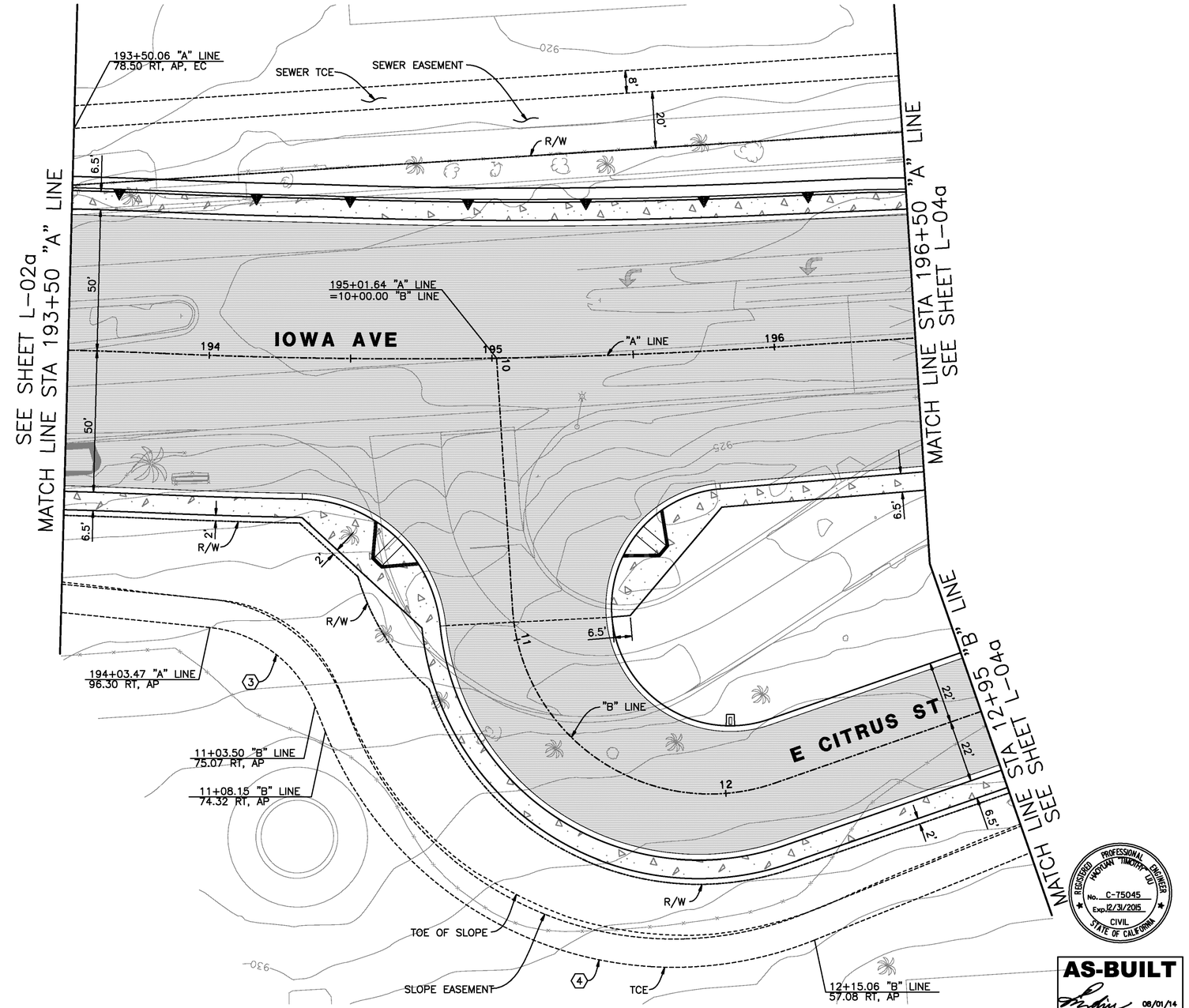

COURSE DATA

(3) R=45.00' DELTA=62°14'37" L=48.89'

(4) R=133.00' DELTA=90°00'00" L=208.92'

0 10 20 40 60 80

SCALE: 1" = 20'

Don't Dig...Until You Call U.S.A. Toll Free
1-800-227-2600
for the location of buried utility lines.
Don't disrupt vital services.
TWO WORKING DAYS BEFORE YOU DIG

PLANS PREPARED BY:

AECOM
901 VIA PIEMONTE, 5TH FLOOR
ONTARIO, CA 91764
(909) 579-3050

REGISTERED PROFESSIONAL ENGINEER
JAMES M FARRIS IV
No. C 55669
Exp. 12-2
CIVIL
STATE OF CALIFORNIA

MARK	REVISIONS	APPR	DATE
7	ADDENDUM NO.3		5/9/12
	NEW SHEET TO DISPLAY TCE		
AS-BUILT	ADDED TOTAL SHEET COUNT		8/1/14

DESIGN BY TL DRAWN BY TL CHECKED BY BMS

IOWA AVENUE
GRADE SEPARATION

LAYOUT
TCE LIMITS

DWG NO. R-4237
L-03a
SHEET 13a OF 133

SCALE: AS SHOWN

AS-BUILTS

CONSTRUCTION NOTES:

1. CONSTRUCT 8" ASPHALT CONCRETE OVER 16" CRUSHED AGGREGATE BASE.
2. CONSTRUCT 8" TYPE I CURB & GUTTER PER THE CITY'S STD NO. 200.
3. CONSTRUCT 8" TYPE II CURB PER THE CITY'S STD NO. 200.
4. CONSTRUCT SIDEWALK, WIDTH PER PLAN, PER THE CITY'S STD NO. 325.
8. CONSTRUCT 7" ASPHALT CONCRETE OVER 12" CRUSHED AGGREGATE BASE.
9. CONSTRUCT 5" ASPHALT CONCRETE OVER 10" CRUSHED AGGREGATE BASE.
10. CONSTRUCT CROSS GUTTER PER THE CITY'S STD NO. 220.
13. INSTALL CHAIN LINK FENCE AND GATE PER THE CITY'S STD NO. 380.
14. CONSTRUCT MSE WALL, SEE STRUCTURAL PLANS.
18. CONSTRUCT PARKWAY DRAIN PER DETAIL 2 ON SHEET C-06.
30. CONSTRUCT HARDSCAPE, WIDTH PER PLAN, PER DETAIL 6 ON SHEET C-11.
33. ~~CONSTRUCT WHEELCHAIR RAMP (TYPE II A) PER THE CITY'S STD NO. 304.~~ AS-BUILTS
38. INSTALL AUTOMATIC SWING GATE PER DETAIL ON SHEET C-13. 1

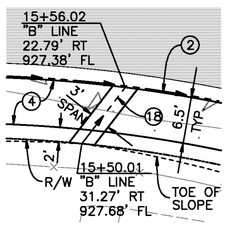

PARKWAY DRAIN
SCALE: 1" = 10'

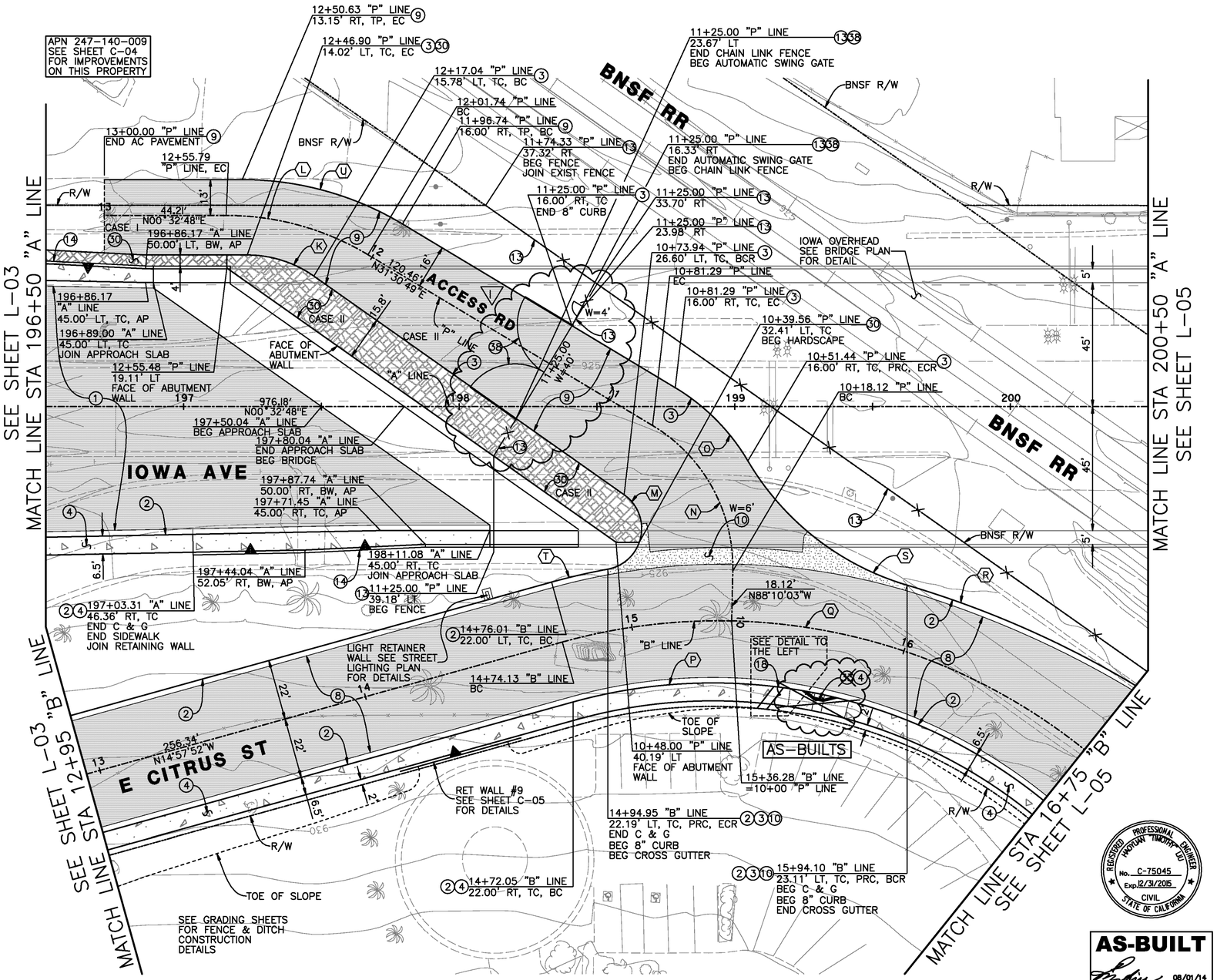

LEGEND:

- NEW ASPHALT CONCRETE
- PCC SIDEWALK
- HARDSCAPE
- CROSS GUTTER

CURVE DATA				
	DELTA	RADIUS	LENGTH	TANGENT
K	35°09'55"	42.00'	25.78'	13.31'
L	30°58'01"	100.00'	54.05'	27.70'
M	134°26'40"	15.00'	35.20'	35.72'
N	60°19'08"	60.00'	63.17'	34.86'
O	28°29'51"	76.00'	37.80'	19.30'
P	105°47'00"	190.00'	350.79'	251.15'
Q	105°47'00"	212.00'	391.41'	280.23'
R	19°05'00"	359.27'	119.66'	60.39'
S	42°58'52"	100.00'	75.02'	39.37'
T	05°07'15"	234.00'	20.91'	10.46'
U	30°58'10"	113.00'	61.07'	31.30'

0 10 20 40 60 80
SCALE: 1" = 20'

REGISTERED PROFESSIONAL ENGINEER JAMES M FARRAR No. C 55661 Exp. 12-12 CIVIL STATE OF CALIFORNIA

AS-BUILT
08/01/14

Don't Dig...Until You Call U.S.A. Toll Free
1-800-227-2600
for the location of buried utility lines.
Don't disrupt vital services.
TWO WORKING DAYS BEFORE YOU DIG

PLANS PREPARED BY:
AECOM
901 VIA PIEMONTE, 5TH FLOOR
ONTARIO, CA 91764
(909) 579-3050

REGISTERED PROFESSIONAL ENGINEER JAMES M FARRAR No. C 55661 Exp. 12-12 CIVIL STATE OF CALIFORNIA

MARK	REVISIONS	APPR	DATE
7	REPLACED 40' WIDE CHAIN LINK GATE WITH AUTOMATIC SWING GATE		5/17/12
	ADDED 4' WIDE CHAIN LINK GATE		
	ADDED NOTE 38 TO CONS NOTES		
AS-BUILT	DELETED WHEELCHAIR RAMP		8/1/14
	ADDED TOTAL SHEET COUNT		

DESIGN BY TL DRAWN BY TL CHECKED BY BMS

IOWA AVENUE
GRADE SEPARATION

LAYOUT

DWG NO. R-4237
L-04
SHEET 14 OF 133
SCALE: AS SHOWN

AS-BUILTS

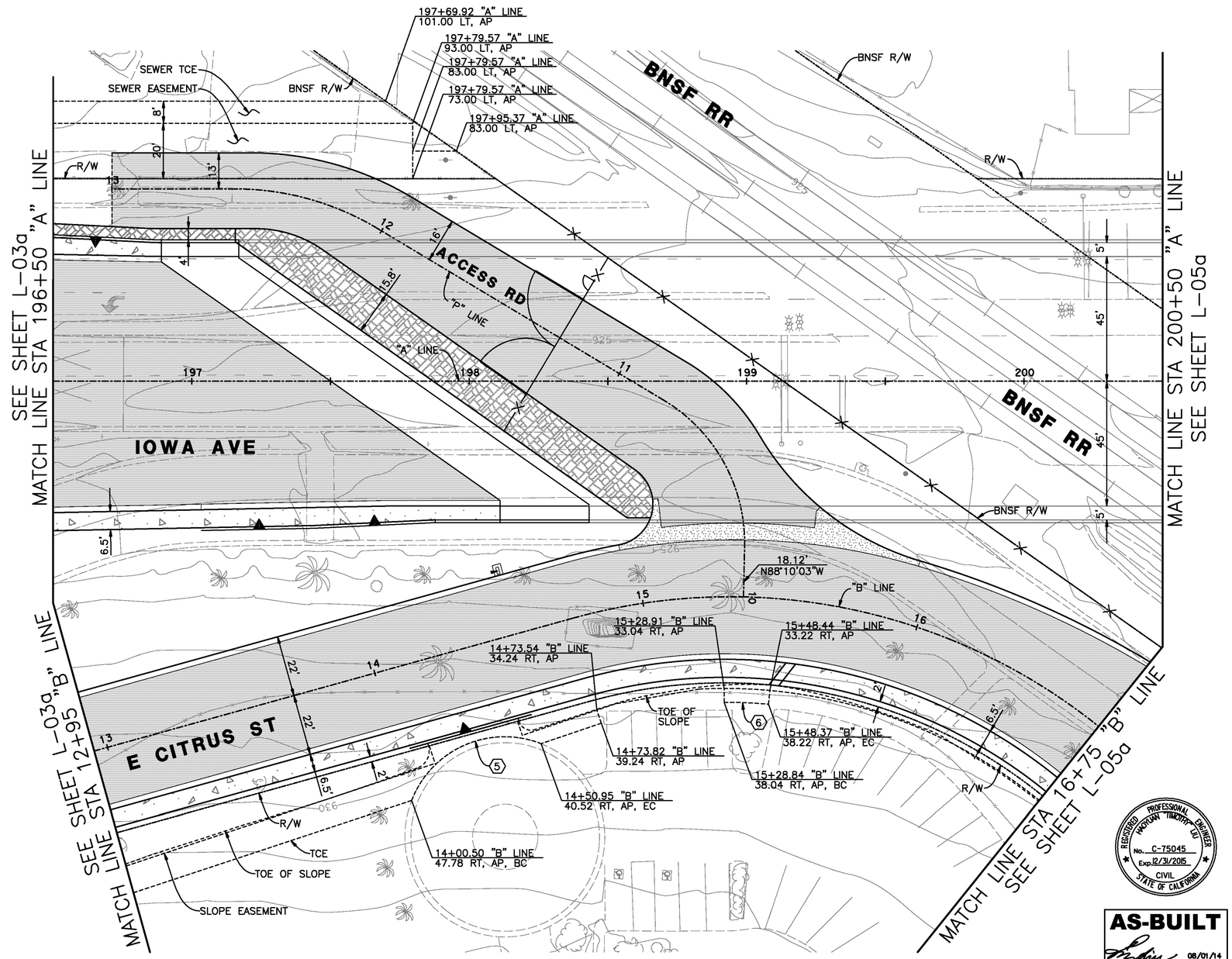

COURSE DATA

(5) R=35.93' DELTA=90°21'45" L=56.66'

(6) R=174.50' DELTA=5°15'38" L=16.02'

0 10 20 40 60 80

SCALE: 1" = 20'

REGISTERED PROFESSIONAL ENGINEER MORGAN TIMOTHY GIL No. C-75045 Exp. 12/31/2015 CIVIL STATE OF CALIFORNIA

AS-BUILT

08/01/14

Don't Dig...Until You Call U.S.A. Toll Free
1-800-227-2600
for the location of buried utility lines.
Don't disrupt vital services.
TWO WORKING DAYS BEFORE YOU DIG

PLANS PREPARED BY:

AECOM

901 VIA PIEMONTE, 5TH FLOOR
ONTARIO, CA 91764
(909) 579-3050

REGISTERED PROFESSIONAL ENGINEER JAMES M FARRELL No. C-55662 Exp. 12-12 CIVIL STATE OF CALIFORNIA

MARK	REVISIONS	APPR	DATE
7	ADDENDUM NO.3		5/9/12
	NEW SHEET TO DISPLAY TCE		
AS-BUILT	ADDED TOTAL SHEET COUNT		8/1/14

DESIGN BY TL DRAWN BY TL CHECKED BY BMS

IOWA AVENUE
GRADE SEPARATION

LAYOUT
TCE LIMITS

DWG NO. R-4237

L-04a

SHEET 14a OF 133

SCALE: AS SHOWN

AS-BUILTS

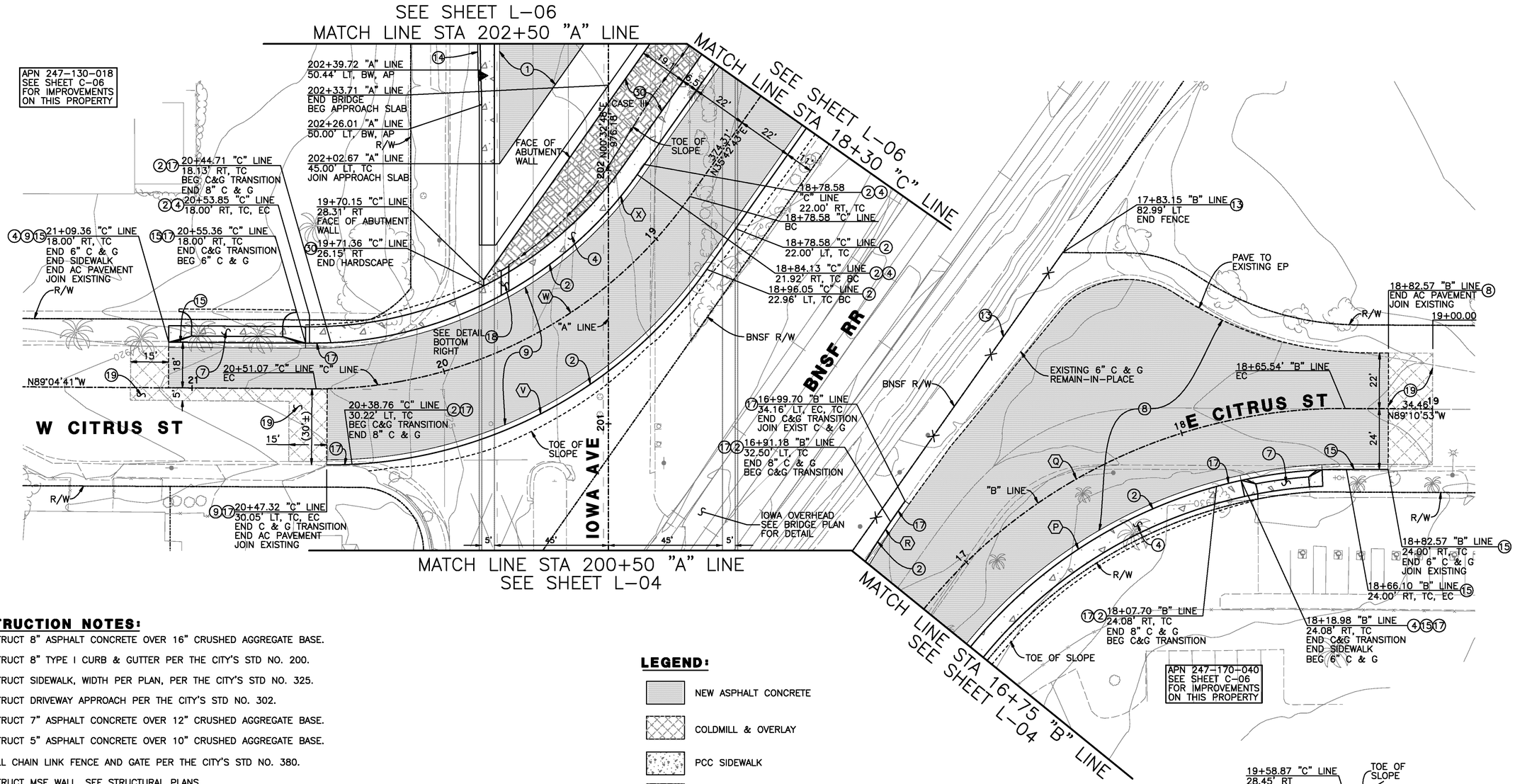

CONSTRUCTION NOTES:

1. CONSTRUCT 8" ASPHALT CONCRETE OVER 16" CRUSHED AGGREGATE BASE.
2. CONSTRUCT 8" TYPE I CURB & GUTTER PER THE CITY'S STD NO. 200.
4. CONSTRUCT SIDEWALK, WIDTH PER PLAN, PER THE CITY'S STD NO. 325.
7. CONSTRUCT DRIVEWAY APPROACH PER THE CITY'S STD NO. 302.
8. CONSTRUCT 7" ASPHALT CONCRETE OVER 12" CRUSHED AGGREGATE BASE.
9. CONSTRUCT 5" ASPHALT CONCRETE OVER 10" CRUSHED AGGREGATE BASE.
13. INSTALL CHAIN LINK FENCE AND GATE PER THE CITY'S STD NO. 380.
14. CONSTRUCT MSE WALL, SEE STRUCTURAL PLANS.
15. CONSTRUCT 6" TYPE I CURB & GUTTER PER THE CITY'S STD NO. 200.
17. CONSTRUCT C&G TRANSITION PER DETAIL 1 ON SHEET C-06.
18. CONSTRUCT PARKWAY DRAIN PER DETAIL 2 ON SHEET C-06.
19. COLDMILL 2" MIN AND OVERLAY 2" MIN AC.
30. CONSTRUCT HARDSCAPE, WIDTH PER PLAN, PER DETAIL 6 ON SHEET C-11.

LEGEND:

- NEW ASPHALT CONCRETE
- COLDMILL & OVERLAY
- PCC SIDEWALK
- HARDSCAPE

CURVE DATA				
	DELTA	RADIUS	LENGTH	TANGENT
P	105°47'00"	190.00'	350.79'	251.15'
Q	105°47'00"	212.00'	391.41'	280.23'
R	19°05'00"	359.27'	119.66'	60.39'
V	55°12'37"	182.00'	175.38'	95.17'
W	55°12'37"	179.00'	172.48'	93.60'
X	55°12'37"	157.00'	151.29'	82.10'

REGISTERED PROFESSIONAL ENGINEER HAOYUAN "TIMOTHY" DU No. C-75045 Exp. 12/31/2015 CIVIL STATE OF CALIFORNIA

AS-BUILT
08/01/14

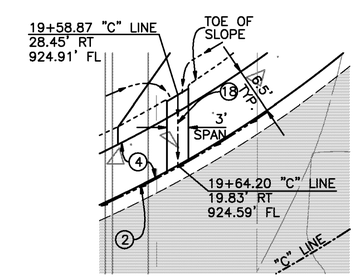

PARKWAY DRAIN
SCALE: 1" = 10'

0 10 20 40 60 80
SCALE: 1" = 20'

Don't Dig...Until You Call U.S.A. Toll Free
1-800-227-2600
for the location of buried utility lines.
Don't disrupt vital services.
TWO WORKING DAYS BEFORE YOU DIG

PLANS PREPARED BY:
AECOM
901 VIA PIEMONTE, 5TH FLOOR
ONTARIO, CA 91764
(909) 579-3050

REGISTERED PROFESSIONAL ENGINEER JAMES M. FARRAW No. C 45662 Exp. 12-12 CIVIL STATE OF CALIFORNIA

MARK	REVISIONS	APPR	DATE
AS-BUILT	ADDED TOTAL SHEET COUNT		8/1/14

DESIGN BY TL DRAWN BY TL CHECKED BY BMS

IOWA AVENUE
GRADE SEPARATION

LAYOUT

DWG NO. R-4237
L-05
SHEET 15 OF 133
SCALE: AS SHOWN

AS-BUILTS

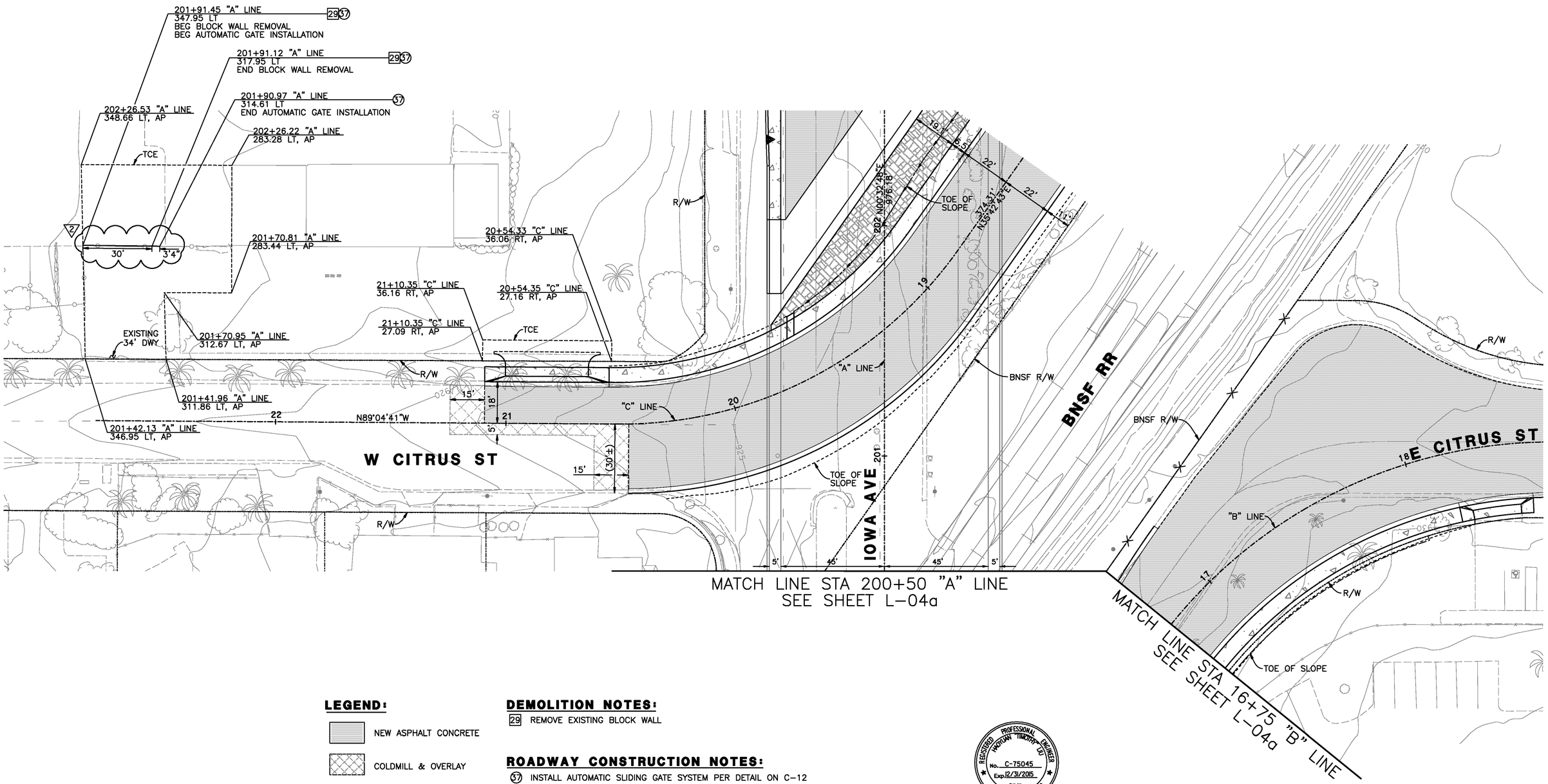

LEGEND:

- NEW ASPHALT CONCRETE
- COLDMILL & OVERLAY
- PCC SIDEWALK
- HARDSCAPE

DEMOLITION NOTES:

29 REMOVE EXISTING BLOCK WALL

ROADWAY CONSTRUCTION NOTES:

37 INSTALL AUTOMATIC SLIDING GATE SYSTEM PER DETAIL ON C-12

REGISTERED PROFESSIONAL ENGINEER HAOYUAN TIMOTHY LIU No. C-75045 Exp. 12/31/2015 CIVIL STATE OF CALIFORNIA

AS-BUILT
08/01/14

0 10 20 40 60 80
SCALE: 1" = 20'

Don't Dig...Until You Call U.S.A. Toll Free
1-800-227-2600
for the location of buried utility lines.
Don't disrupt vital services.
TWO WORKING DAYS BEFORE YOU DIG

PLANS PREPARED BY:
AECOM
901 VIA PIEMONTE, 5TH FLOOR
ONTARIO, CA 91764
(909) 579-3050

REGISTERED PROFESSIONAL ENGINEER JAMES M. FARRELL No. C 65663 Exp. 12-12 CIVIL STATE OF CALIFORNIA

MARK	REVISIONS	APPR	DATE
7	ADDENDUM NO.3		5/9/12
	NEW SHEET TO DISPLAY TCE		
	PROP. IMPROVEMENTS AT APN 247-130-018		
7	REVISE GATE LENGTH		12/17/13
AS-BUILT	ADDED TOTAL SHEET COUNT		8/1/14

DESIGN BY TL DRAWN BY TL CHECKED BY BMS

IOWA AVENUE
GRADE SEPARATION

LAYOUT
TCE LIMITS

DWG NO. R-4237
L-05a
SHEET 15a OF 133
SCALE: AS SHOWN

AS-BUILTS

CONSTRUCTION NOTES:

1. CONSTRUCT 8" ASPHALT CONCRETE OVER 16" CRUSHED AGGREGATE BASE.
2. CONSTRUCT 8" TYPE I CURB & GUTTER PER THE CITY'S STD NO. 200.
4. CONSTRUCT SIDEWALK, WIDTH PER PLAN, PER THE CITY'S STD NO. 325.
7. CONSTRUCT DRIVEWAY APPROACH PER THE CITY'S STD NO. 302.
9. CONSTRUCT 5" ASPHALT CONCRETE OVER 10" CRUSHED AGGREGATE BASE.
14. CONSTRUCT MSE WALL, SEE STRUCTURAL PLANS.
30. CONSTRUCT HARDSCAPE, WIDTH PER PLAN, PER DETAIL 6 ON SHEET C-11.

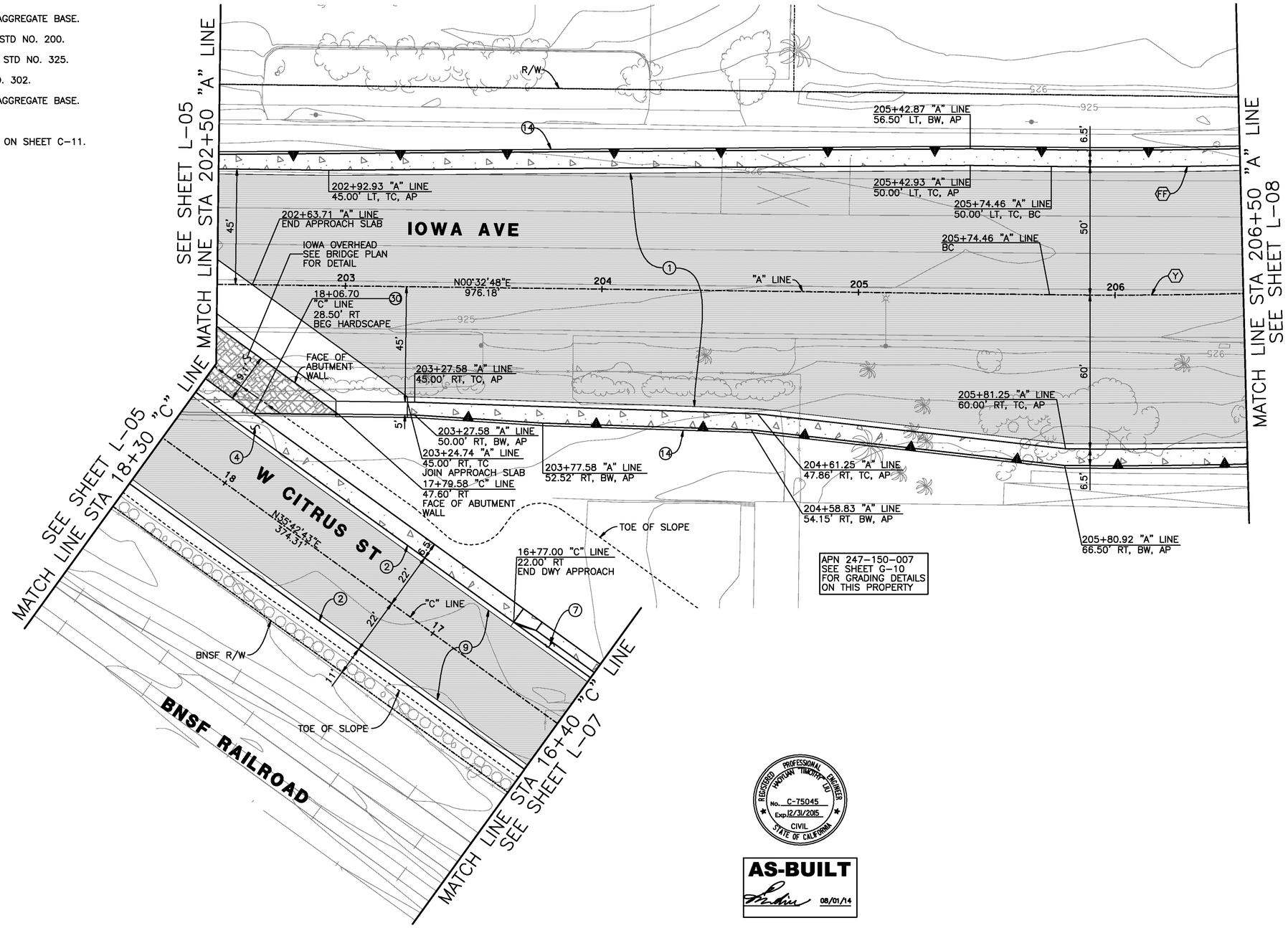

LEGEND:

- NEW ASPHALT CONCRETE
- PCC SIDEWALK
- HARDSCAPE

CURVE DATA				
	DELTA	RADIUS	LENGTH	TANGENT
Y	07°10'00"	2000.00'	250.16'	125.24'
FF	02°54'20"	1950.00'	98.89'	49.45'

0 10 20 40 60 80

SCALE: 1" = 20'

REGISTERED PROFESSIONAL ENGINEER HAOYUAN TIMOTHY DU No. C-75045 Exp. 12/31/2015 CIVIL STATE OF CALIFORNIA

AS-BUILT
08/01/14

Don't Dig...Until You Call U.S.A. Toll Free
1-800-227-2600
for the location of buried utility lines.
Don't disrupt vital services.
TWO WORKING DAYS BEFORE YOU DIG

PLANS PREPARED BY:
AECOM
901 VIA PIEMONTE, 5TH FLOOR
ONTARIO, CA 91764
(909) 579-3050

REGISTERED PROFESSIONAL ENGINEER JAMES M FARRIER No. C 45662 Exp. 12-12 CIVIL STATE OF CALIFORNIA

MARK	REVISIONS	APPR	DATE
AS-BUILT	ADDED TOTAL SHEET COUNT		8/1/14

DESIGN BY TL DRAWN BY TL CHECKED BY BMS

IOWA AVENUE
GRADE SEPARATION

LAYOUT

DWG NO. R-4237
L-06
SHEET 16 OF 133
SCALE: AS SHOWN

AS-BUILTS

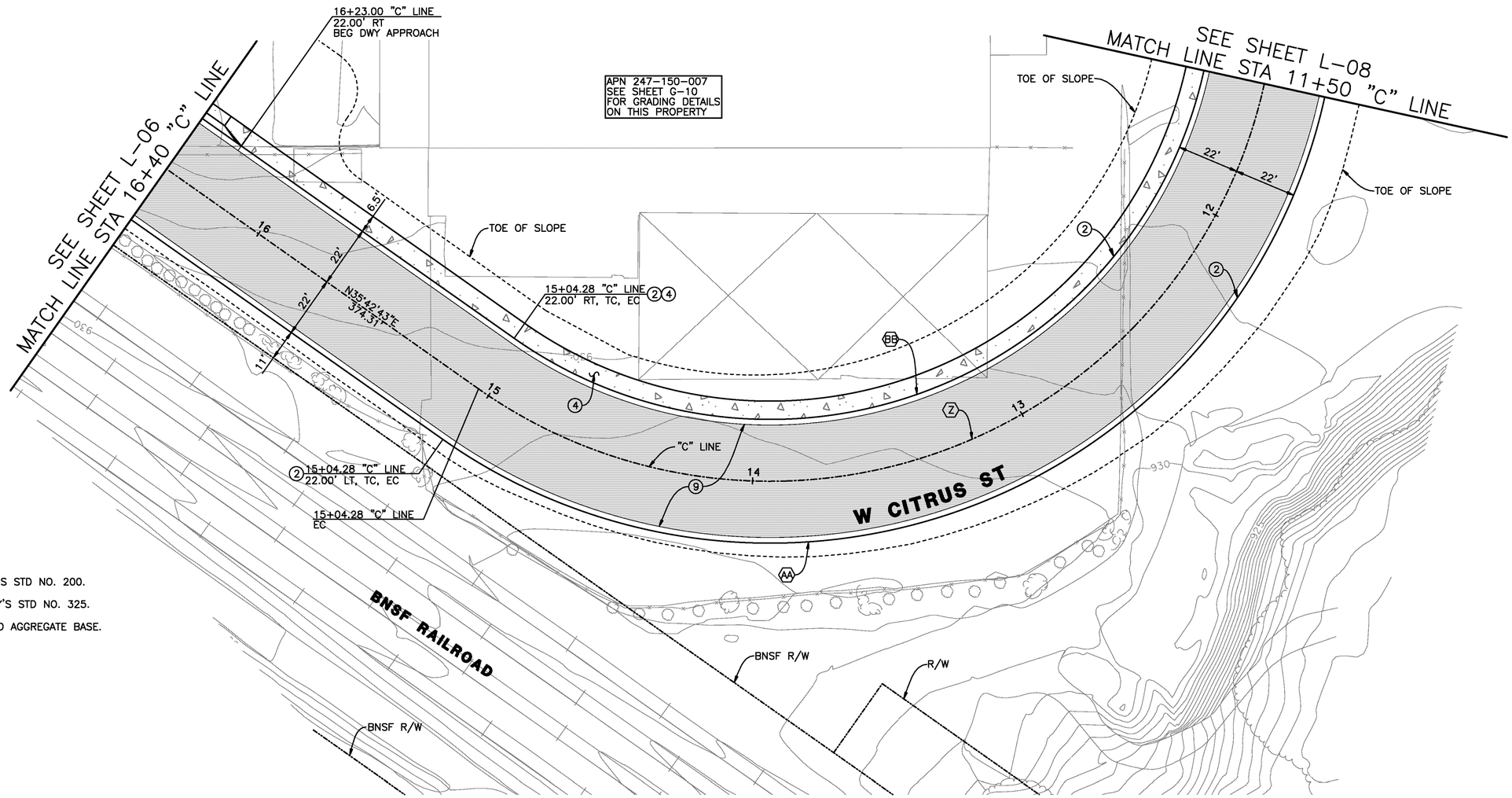

CONSTRUCTION NOTES:

(2) CONSTRUCT 8" TYPE I CURB & GUTTER PER THE CITY'S STD NO. 200.

(4) CONSTRUCT SIDEWALK, WIDTH PER PLAN, PER THE CITY'S STD NO. 325.

(9) CONSTRUCT 5" ASPHALT CONCRETE OVER 10" CRUSHED AGGREGATE BASE.

LEGEND:

NEW ASPHALT CONCRETE

PCC SIDEWALK

CURVE DATA				
	DELTA	RADIUS	LENGTH	TANGENT
Z	125°23'24"	180.00'	393.92'	348.67'
AA	125°23'24"	202.00'	442.07'	391.28'
BB	122°23'00"	158.00'	337.49'	287.30'

REGISTERED PROFESSIONAL ENGINEER
HAOYUAN TIMOTHY LIU
No. C-75045
Exp. 12/31/2015
CIVIL
STATE OF CALIFORNIA

AS-BUILT
08/01/14

0 10 20 40 60 80
SCALE: 1" = 20'

Don't Dig...Until You Call U.S.A. Toll Free
1-800-227-2600
for the location of buried utility lines.
Don't disrupt vital services.
TWO WORKING DAYS BEFORE YOU DIG

PLANS PREPARED BY:
AECOM
901 VIA PIEMONTE, 5TH FLOOR
ONTARIO, CA 91764
(909) 579-3050

REGISTERED PROFESSIONAL ENGINEER
JAMES M FARRIS
No. C-55668
Exp. 12-31
CIVIL
STATE OF CALIFORNIA

MARK	REVISIONS	APPR	DATE
AS-BUILT	ADDED TOTAL SHEET COUNT		8/1/14

DESIGN BY TL DRAWN BY TL CHECKED BY BMS

IOWA AVENUE
GRADE SEPARATION

LAYOUT

DWG NO. R-4237
L-07
SHEET 17 OF 133
SCALE: AS SHOWN

AS-BUILTS

CONSTRUCTION NOTES:

1. CONSTRUCT 8" ASPHALT CONCRETE OVER 16" CRUSHED AGGREGATE BASE.
2. CONSTRUCT 8" TYPE I CURB & GUTTER PER THE CITY'S STD NO. 200.
4. CONSTRUCT SIDEWALK, WIDTH PER PLAN, PER THE CITY'S STD NO. 325.
6. CONSTRUCT WHEELCHAIR RAMP (TYPE II) PER THE CITY'S STD NO. 304.
7. CONSTRUCT DRIVEWAY APPROACH PER THE CITY'S STD NO. 302.
9. CONSTRUCT 5" ASPHALT CONCRETE OVER 10" CRUSHED AGGREGATE BASE.
10. CONSTRUCT CROSS GUTTER PER THE CITY'S STD NO. 220.
14. CONSTRUCT MSE WALL, SEE STRUCTURAL PLANS.

LEGEND:

- NEW ASPHALT CONCRETE
- PCC SIDEWALK
- CROSS GUTTER

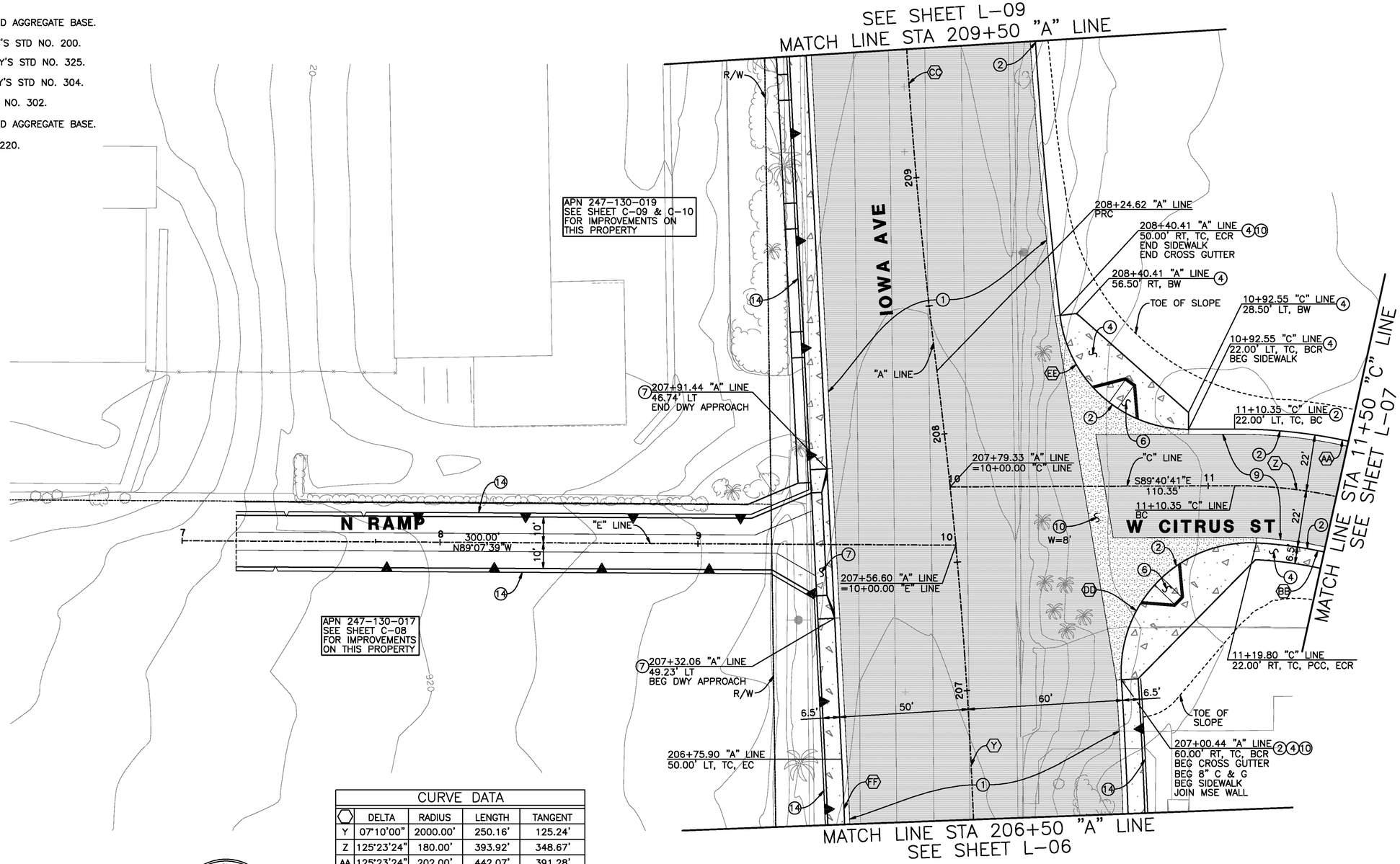

CURVE DATA				
	DELTA	RADIUS	LENGTH	TANGENT
Y	07°10'00"	2000.00'	250.16'	125.24'
Z	125°23'24"	180.00'	393.92'	348.67'
AA	125°23'24"	202.00'	442.07'	391.28'
BB	122°23'00"	158.00'	337.49'	287.30'
CC	06°40'22"	2000.00'	232.93'	116.60'
DD	96°23'27"	50.00'	84.12'	55.91'
EE	83°30'38"	50.00'	72.88'	44.63'
FF	02°54'20"	1950.00'	98.89'	49.45'

0 10 20 40 60 80
SCALE: 1" = 20'

REGISTERED PROFESSIONAL ENGINEER
MOHAN TIMOTHY TAU
No. C-75045
Exp. 12/31/2015
CIVIL
STATE OF CALIFORNIA

AS-BUILT
08/01/14

Don't Dig...Until You Call U.S.A. Toll Free
1-800-227-2600
for the location of buried utility lines.
Don't disrupt vital services.
TWO WORKING DAYS BEFORE YOU DIG

PLANS PREPARED BY:
AECOM
901 VIA PIEMONTE, 5TH FLOOR
ONTARIO, CA 91764
(909) 579-3050

REGISTERED PROFESSIONAL ENGINEER
JAMES M FARRAR
No. C 45562
Exp. 12-31
CIVIL
STATE OF CALIFORNIA

MARK	REVISIONS	APPR	DATE
AS-BUILT	ADDED TOTAL SHEET COUNT		8/1/14

DESIGN BY TL DRAWN BY TL CHECKED BY BMS

IOWA AVENUE
GRADE SEPARATION

LAYOUT

DWG NO. R-4237
L-08
SHEET 18 OF 133
SCALE: AS SHOWN

AS-BUILTS

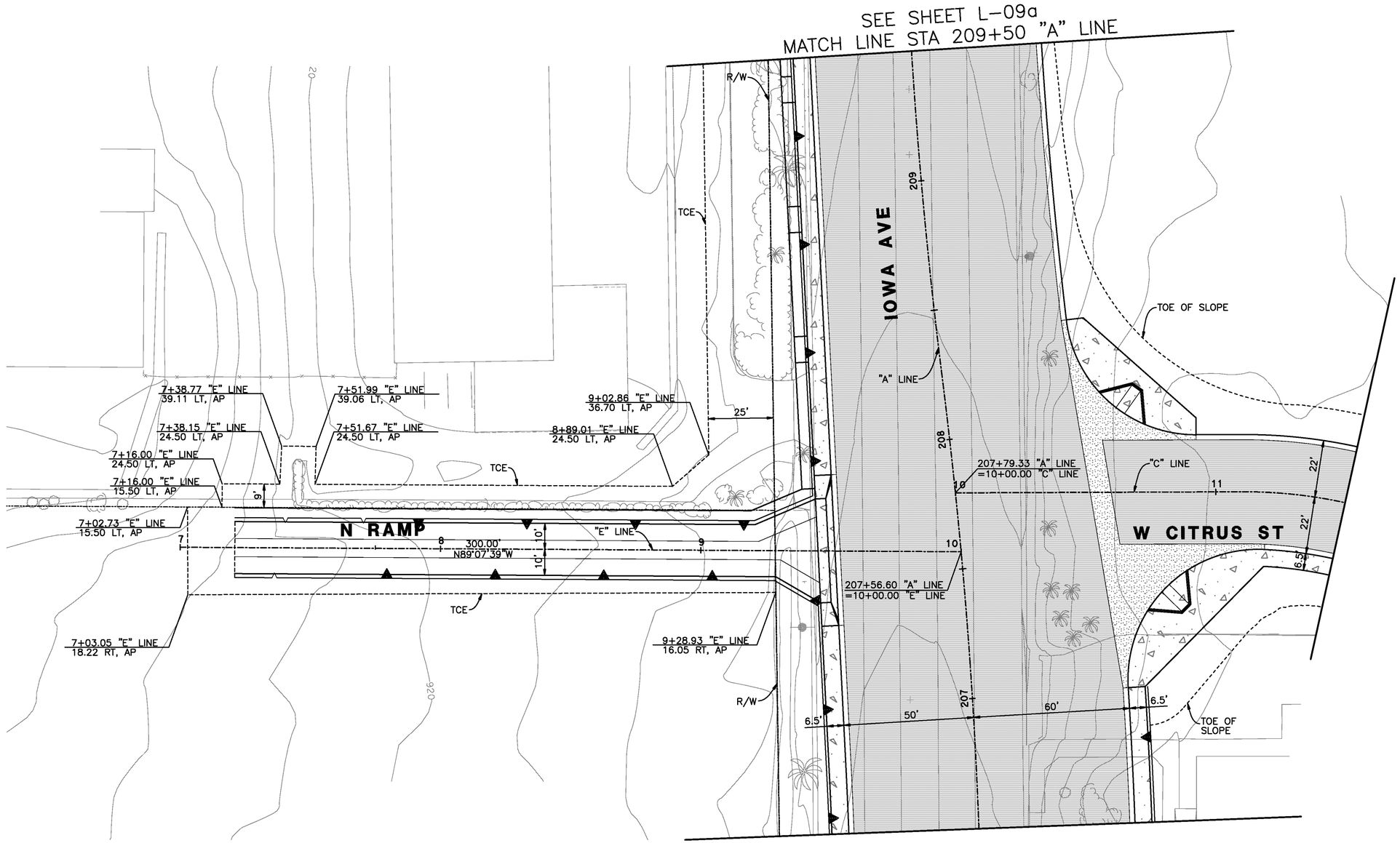

0 10 20 40 60 80

SCALE: 1" = 20'

REGISTERED PROFESSIONAL ENGINEER
HAOTIAN "TIMOTHY" LU
No. C-75045
Exp. 12/31/2015
CIVIL
STATE OF CALIFORNIA

AS-BUILT
08/01/14

Don't Dig...Until You Call U.S.A. Toll Free
1-800-227-2600
for the location of buried utility lines.
Don't disrupt vital services.
TWO WORKING DAYS BEFORE YOU DIG

PLANS PREPARED BY:
AECOM
901 VIA PIEMONTE, 5TH FLOOR
ONTARIO, CA 91764
(909) 579-3050

REGISTERED PROFESSIONAL ENGINEER
JAMES M FARRAR
No. C-56662
Exp. 12-12
CIVIL
STATE OF CALIFORNIA

MARK	REVISIONS	APPR	DATE
7	ADDENDUM NO.3		5/9/12
	NEW SHEET TO DISPLAY TCE		
AS-BUILT	ADDED TOTAL SHEET COUNT		8/1/14

DESIGN BY TL DRAWN BY TL CHECKED BY BMS

IOWA AVENUE
GRADE SEPARATION

LAYOUT
TCE LIMITS

DWG NO. R-4237
L-08a
SHEET 18a OF 133

SCALE: AS SHOWN

AS-BUILTS

CONSTRUCTION NOTES:

1. CONSTRUCT 8" ASPHALT CONCRETE OVER 16" CRUSHED AGGREGATE BASE.
2. CONSTRUCT 8" TYPE I CURB & GUTTER PER THE CITY'S STD NO. 200.
4. CONSTRUCT SIDEWALK, WIDTH PER PLAN, PER THE CITY'S STD NO. 325.
7. CONSTRUCT DRIVEWAY APPROACH PER THE CITY'S STD NO. 302.
14. CONSTRUCT MSE WALL, SEE STRUCTURAL PLANS.
19. COLDMILL 2" MIN AND OVERLAY 2" MIN AC.

LEGEND:

- NEW ASPHALT CONCRETE
- COLDMILL & OVERLAY
- PCC SIDEWALK

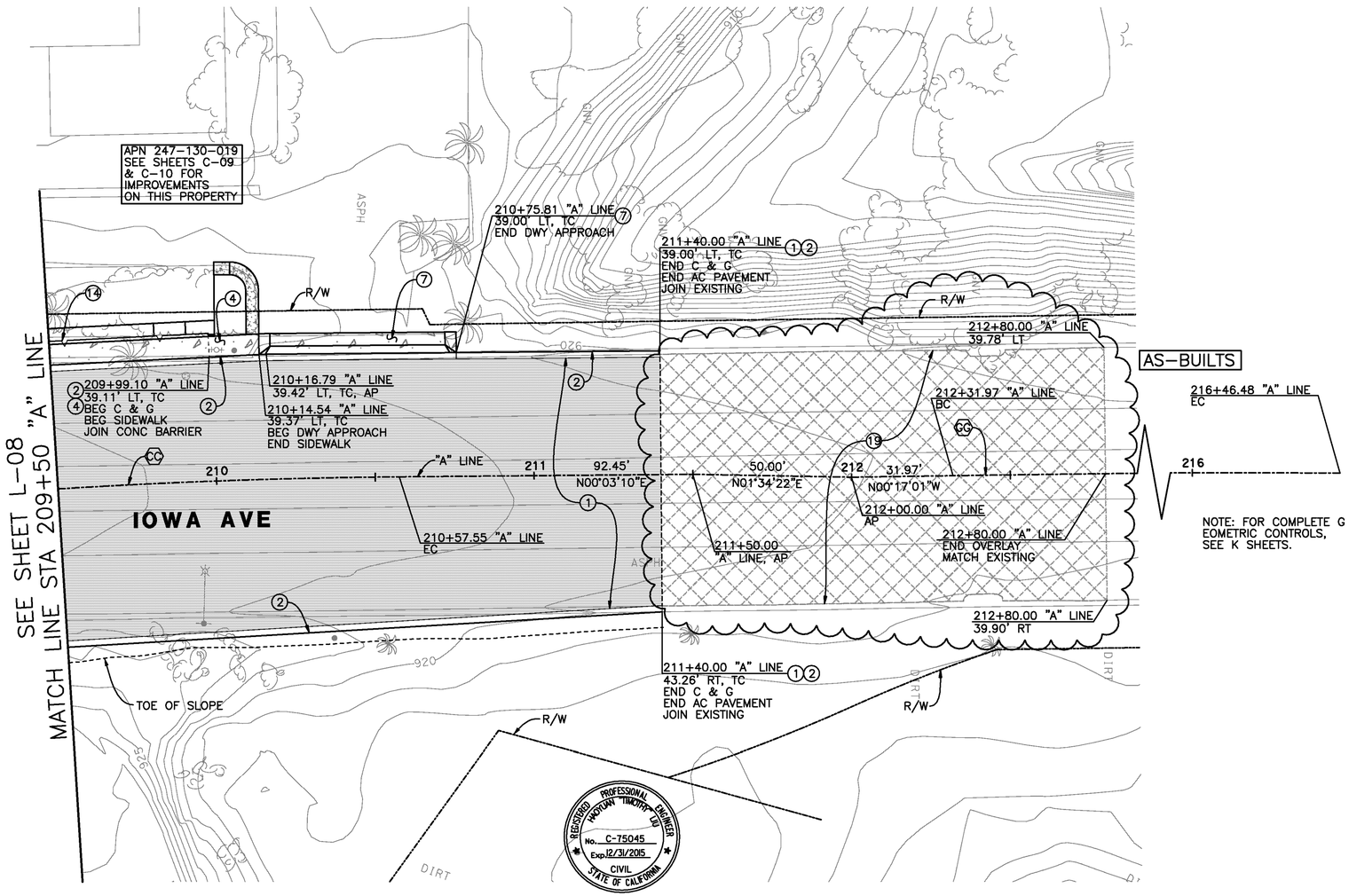

CURVE DATA				
⬡	DELTA	RADIUS	LENGTH	TANGENT
CC	06°40'22"	2000.00'	232.93'	116.60'
GG	00°57'00"	25000.00'	414.52'	207.26'

0 10 20 40 60 80

SCALE: 1" = 20'

REGISTERED PROFESSIONAL ENGINEER HOFFMAN TIMOTHY LEE No. C-75045 Exp. 12/31/2015 CIVIL STATE OF CALIFORNIA

AS-BUILT
08/01/14

Don't Dig...Until You Call U.S.A. Toll Free
1-800-227-2600
for the location of buried utility lines.
Don't disrupt vital services.
TWO WORKING DAYS BEFORE YOU DIG

PLANS PREPARED BY:
AECOM
901 VIA PIEMONTE, 5TH FLOOR
ONTARIO, CA 91764
(909) 579-3050

REGISTERED PROFESSIONAL ENGINEER JAMES M FARRELL No. C 55662 Exp. 12-2 CIVIL STATE OF CALIFORNIA

MARK	REVISIONS	APPR	DATE
AS-BUILT	REVISED OVERLAY LIMIT		8/1/14
	ADDED TOTAL SHEET COUNT		

DESIGN BY TL DRAWN BY TL CHECKED BY BMS

IOWA AVENUE
GRADE SEPARATION

LAYOUT

DWG NO. R-4237
L-09
SHEET 19 OF 133

SCALE: AS SHOWN

AS-BUILTS

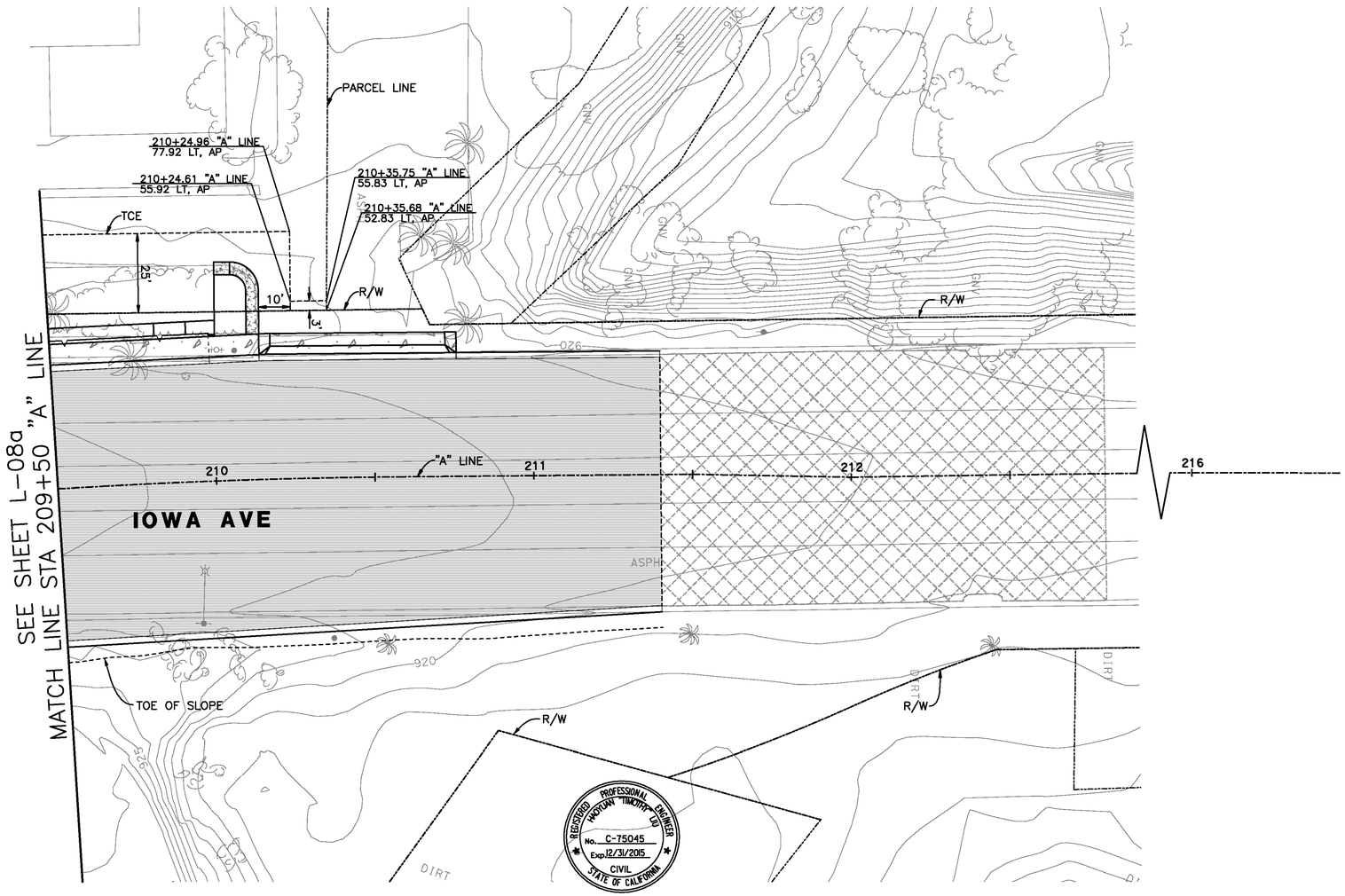

AS-BUILT

08/01/14

0 10 20 40 60 80

SCALE: 1" = 20'

Don't Dig...Until You Call U.S.A. Toll Free
1-800-227-2600
for the location of buried utility lines.
Don't disrupt vital services.
TWO WORKING DAYS BEFORE YOU DIG

PLANS PREPARED BY:

AECOM

901 VIA PIEMONTE, 5TH FLOOR
ONTARIO, CA 91764
(909) 579-3050

REGISTERED PROFESSIONAL ENGINEER
JAMES M. FARRIS
No. C-55662
Exp. 12-31-12
CIVIL
STATE OF CALIFORNIA

MARK	REVISIONS	APPR	DATE
	ADDENDUM NO.3		5/9/12
	NEW SHEET TO DISPLAY TCE		
AS-BUILT	ADDED TOTAL SHEET COUNT		8/1/14

DESIGN BY TL DRAWN BY TL CHECKED BY BMS

IOWA AVENUE
GRADE SEPARATION

LAYOUT
TCE LIMITS

DWG NO. R-4237
L-09a
SHEET 19a OF 133

SCALE: AS SHOWN

AS-BUILTS

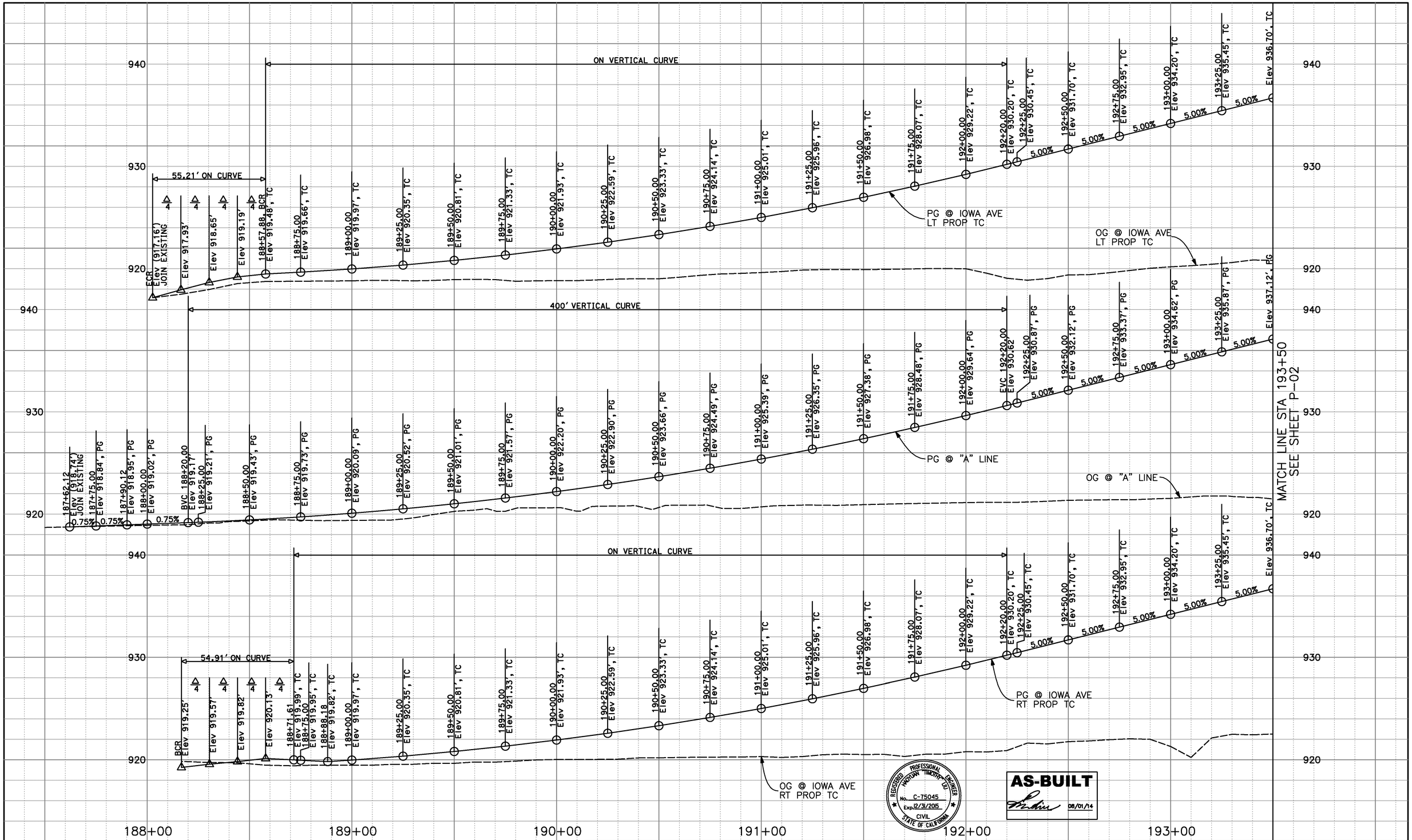

REGISTERED PROFESSIONAL ENGINEER
HAROLD TIMOTHY LEE
No. C-75045
Exp. 12/31/2015
CIVIL
STATE OF CALIFORNIA

AS-BUILT
08/01/14

Don't Dig...Until You Call U.S.A. Toll Free
1-800-227-2600
for the location of buried utility lines.
Don't disrupt vital services.
TWO WORKING DAYS BEFORE YOU DIG

PLANS PREPARED BY:
AECOM
901 VIA PIEMONTE, 5TH FLOOR
ONTARIO, CA 91764
(909) 579-3050

REGISTERED PROFESSIONAL ENGINEER
JAMES M. FARR
No. C 45668
Exp. 12-12
CIVIL
STATE OF CALIFORNIA

MARK	REVISIONS	APPR	DATE
AS-BUILT	ADDED TOTAL SHEET COUNT		8/1/14

DESIGN BY TL DRAWN BY TL CHECKED BY BMS

IOWA AVENUE
GRADE SEPARATION

PROFILES
IOWA AVENUE

DWG NO. R-4237
P-01
SHEET 20 OF 133
SCALE: AS SHOWN

AS-BUILTS

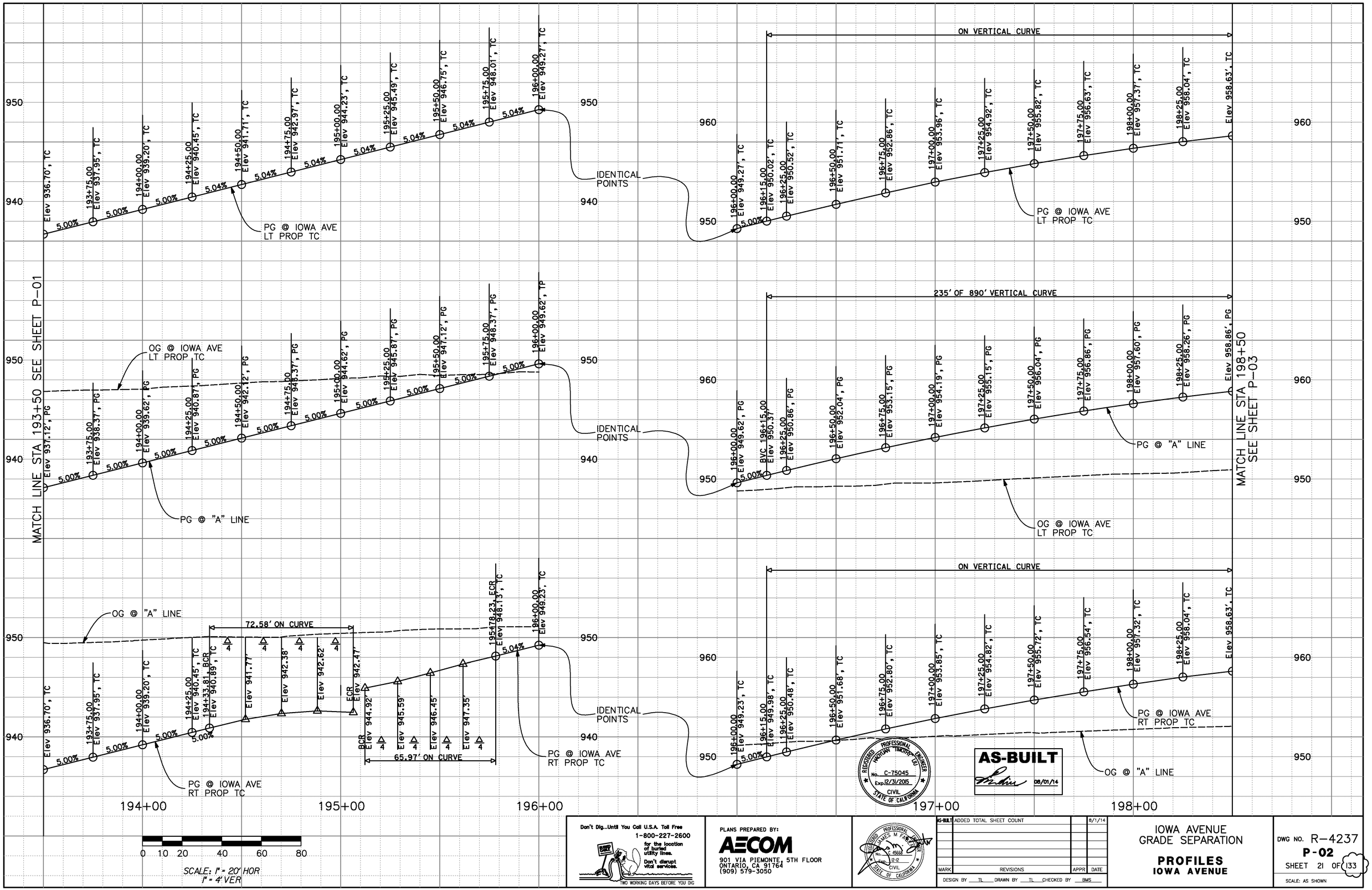

Don't Dig...Until You Call U.S.A. Toll Free
1-800-227-2600
for the location of buried utility lines.
Don't disrupt vital services.
TWO WORKING DAYS BEFORE YOU DIG

PLANS PREPARED BY:
AECOM
901 VIA PIEMONTE, 5TH FLOOR
ONTARIO, CA 91764
(909) 579-3050

REGISTERED PROFESSIONAL ENGINEER JAMES M. FARRAR No. C 45662 Exp. 12-12 CIVIL STATE OF CALIFORNIA

MARK	REVISIONS	APPR	DATE
AS-BUILT	ADDED TOTAL SHEET COUNT		8/1/14

DESIGN BY TL DRAWN BY TL CHECKED BY BMS

IOWA AVENUE
GRADE SEPARATION

PROFILES
IOWA AVENUE

DWG NO. R-4237
P-02
SHEET 21 OF 133

SCALE: AS SHOWN

AS-BUILTS

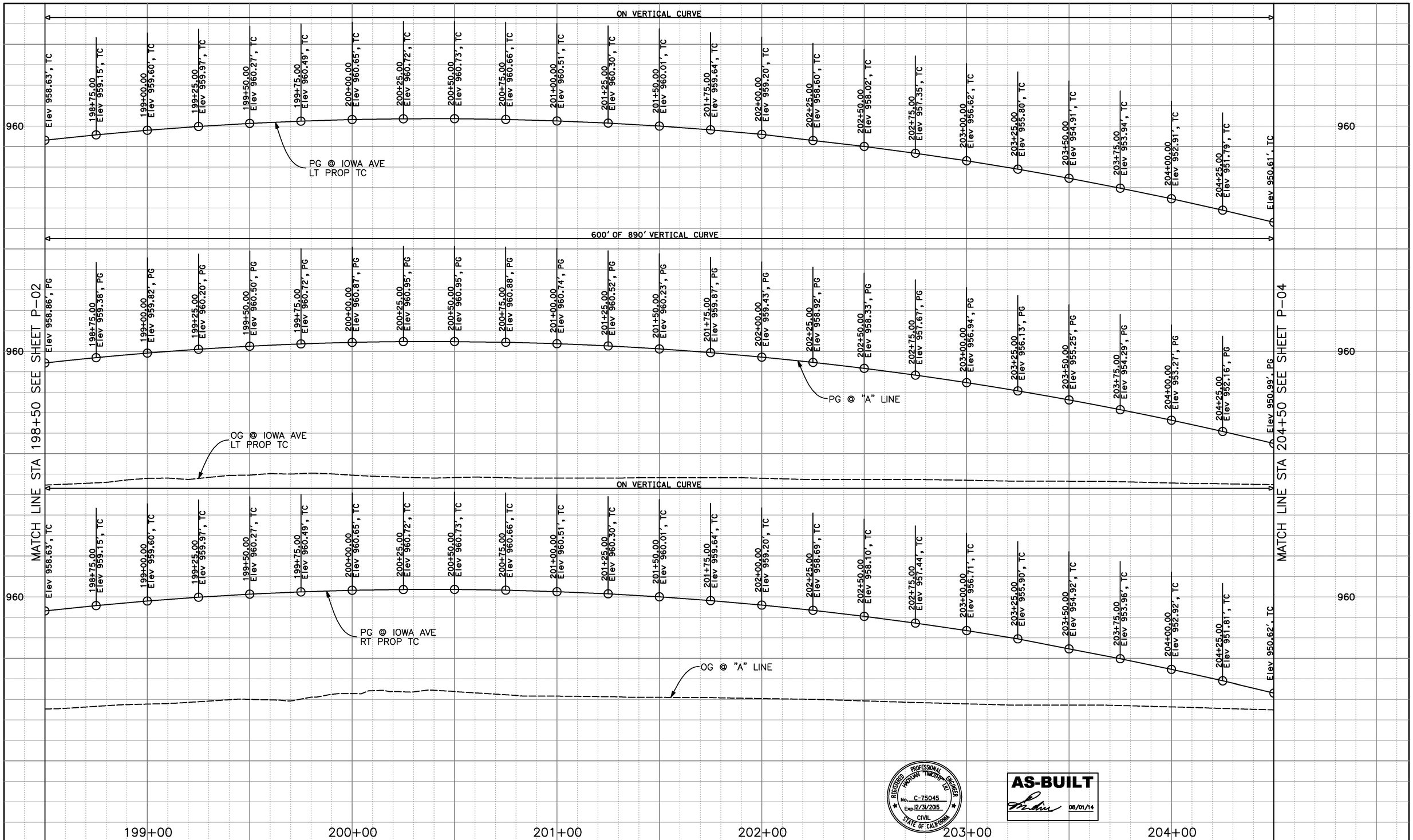

REGISTERED PROFESSIONAL ENGINEER
MARYAN TIMOTHY DU
No. C-75045
Exp. 12/31/2015
CIVIL
STATE OF CALIFORNIA

AS-BUILT
08/01/14

Don't Dig...Until You Call U.S.A. Toll Free
1-800-227-2600
for the location of buried utility lines.
Don't disrupt vital services.
TWO WORKING DAYS BEFORE YOU DIG

PLANS PREPARED BY:
AECOM
901 VIA PIEMONTE, 5TH FLOOR
ONTARIO, CA 91764
(909) 579-3050

REGISTERED PROFESSIONAL ENGINEER
JAMES M. FARRAR
No. C 45662
Exp. 12-12
CIVIL
STATE OF CALIFORNIA

MARK	REVISIONS	APPR	DATE
AS-BUILT	ADDED TOTAL SHEET COUNT		8/1/14

DESIGN BY TL DRAWN BY TL CHECKED BY BMS

IOWA AVENUE
GRADE SEPARATION

PROFILES
IOWA AVENUE

DWG NO. R-4237
P-03
SHEET 22 OF 133
SCALE: AS SHOWN

AS-BUILTS

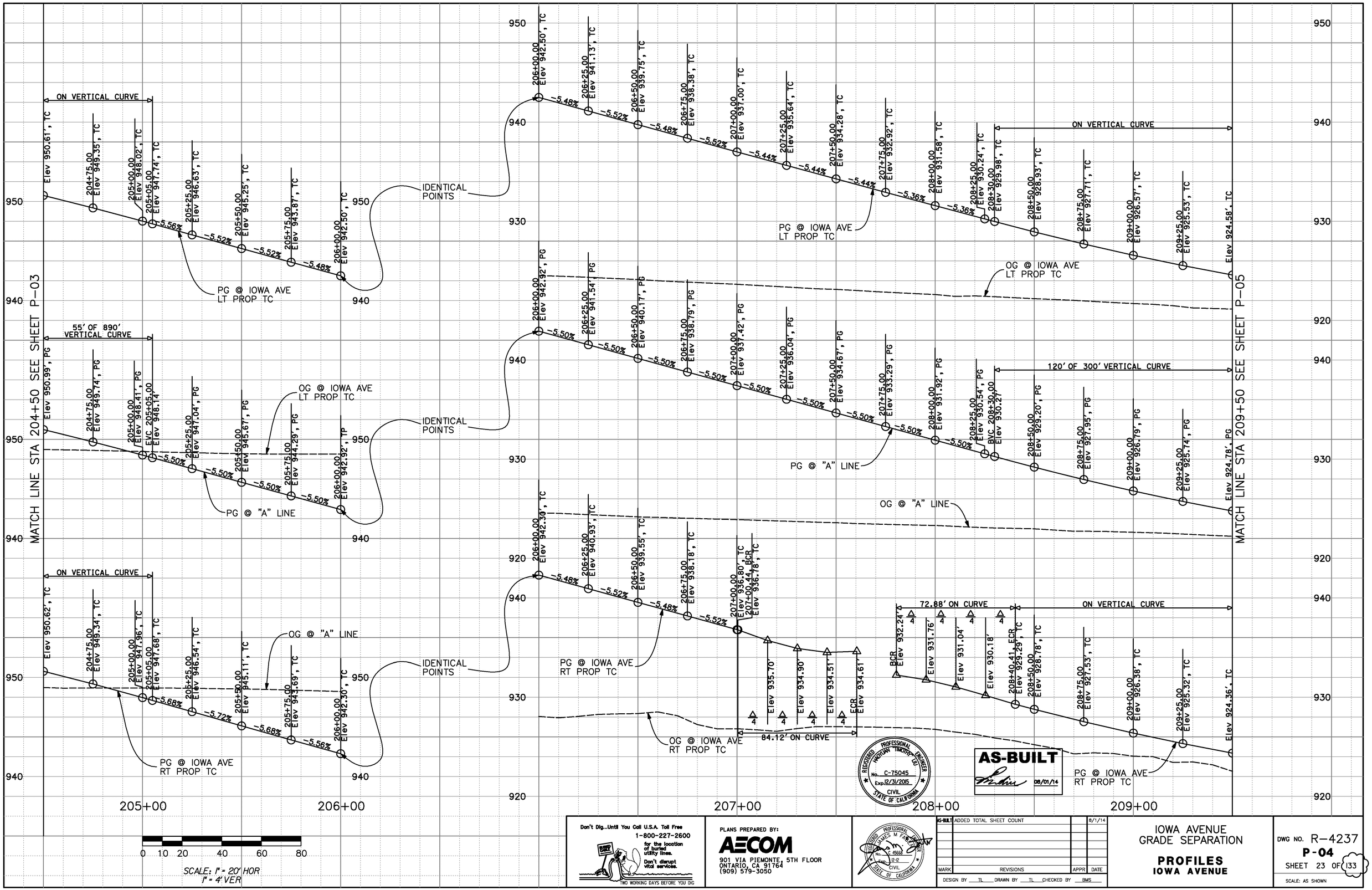
MATCH LINE STA 204+50 SEE SHEET P-03
MATCH LINE STA 209+50 SEE SHEET P-05
ON VERTICAL CURVE
55' OF 890' VERTICAL CURVE
120' OF 300' VERTICAL CURVE
72.88' ON CURVE
84.12' ON CURVE
IDENTICAL POINTS
PG @ IOWA AVE LT PROP TC
OG @ IOWA AVE LT PROP TC
PG @ "A" LINE
OG @ "A" LINE
PG @ IOWA AVE RT PROP TC
OG @ IOWA AVE RT PROP TC
Elev 950.61', TC
204+75.00 Elev 949.35', TC
205+00.00 Elev 948.02', TC
205+05.00 Elev 947.74', TC
205+25.00 Elev 946.63', TC
205+50.00 Elev 945.25', TC
205+75.00 Elev 943.87', TC
206+00.00 Elev 942.50', TC
-5.56%
-5.52%
-5.48%
Elev 950.99', PG
Elev 949.74', PG
205+00.00 Elev 948.41', PG
EVC 205+05.00 Elev 948.14'
205+25.00 Elev 947.04', PG
205+50.00 Elev 945.67', PG
205+75.00 Elev 944.29', PG
206+00.00 Elev 942.92', TP
-5.50%
Elev 950.62', TC
Elev 949.34', TC
205+00.00 Elev 947.96', TC
205+05.00 Elev 947.68', TC
205+25.00 Elev 946.54', TC
205+50.00 Elev 945.11', TC
205+75.00 Elev 943.69', TC
206+00.00 Elev 942.30', TC
-5.68%
-5.72%
-5.56%
206+00.00 Elev 942.50', TC
206+25.00 Elev 941.13', TC
206+50.00 Elev 939.75', TC
206+75.00 Elev 938.38', TC
207+00.00 Elev 937.00', TC
207+25.00 Elev 935.64', TC
207+50.00 Elev 934.28', TC
207+75.00 Elev 932.92', TC
208+00.00 Elev 931.58', TC
208+25.00 Elev 930.24', TC
208+30.00 Elev 929.98', TC
208+50.00 Elev 928.93', TC
208+75.00 Elev 927.71', TC
209+00.00 Elev 926.57', TC
209+25.00 Elev 925.53', TC
Elev 924.58', TC
-5.48%
-5.52%
-5.44%
-5.36%
206+00.00 Elev 942.92', PG
206+25.00 Elev 941.54', PG
206+50.00 Elev 940.17', PG
206+75.00 Elev 938.79', PG
207+00.00 Elev 937.42', PG
207+25.00 Elev 936.04', PG
207+50.00 Elev 934.67', PG
207+75.00 Elev 933.29', PG
208+00.00 Elev 931.92', PG
208+25.00 Elev 930.54', PG
BVC 208+30.00 Elev 930.27'
208+50.00 Elev 929.20', PG
208+75.00 Elev 927.95', PG
209+00.00 Elev 926.79', PG
209+25.00 Elev 925.74', PG
Elev 924.78', PG
-5.50%
206+00.00 Elev 942.30', TC
206+25.00 Elev 940.93', TC
206+50.00 Elev 939.55', TC
206+75.00 Elev 938.18', TC
207+00.00 Elev 936.80', TC
207+00.44', BCR Elev 936.78', TC
Elev 935.70'
Elev 934.90'
Elev 934.51'
ECR Elev 934.61'
BCR Elev 932.24'
Elev 931.76'
Elev 931.04'
Elev 930.18'
208+40.41', ECR Elev 929.29', TC
208+50.00 Elev 928.78', TC
208+75.00 Elev 927.53', TC
209+00.00 Elev 926.38', TC
209+25.00 Elev 925.32', TC
Elev 924.36', TC
-5.48%
-5.52%
205+00
206+00
207+00
208+00
209+00
950
940
930
920
0 10 20 40 60 80
SCALE: 1" = 20' HOR
1" = 4' VER
REGISTERED PROFESSIONAL ENGINEER HAOYUAN TIMOTHY LIU No. C-75045 Exp. 12/31/2015 CIVIL STATE OF CALIFORNIA
AS-BUILT 08/01/14
Don't Dig...Until You Call U.S.A. Toll Free 1-800-227-2600 for the location of buried utility lines. Don't disrupt vital services.
TWO WORKING DAYS BEFORE YOU DIG
PLANS PREPARED BY:
AECOM
901 VIA PIEMONTE, 5TH FLOOR
ONTARIO, CA 91764
(909) 579-3050
REGISTERED PROFESSIONAL ENGINEER JAMES M. FARRIS No. C 45668 Exp. 12-12 CIVIL STATE OF CALIFORNIA
AS-BUILT ADDED TOTAL SHEET COUNT 8/1/14
MARK REVISIONS APPR DATE
DESIGN BY TL DRAWN BY TL CHECKED BY BMS
IOWA AVENUE
GRADE SEPARATION
PROFILES
IOWA AVENUE
DWG NO. R-4237
P-04
SHEET 23 OF 133
SCALE: AS SHOWN
AS-BUILTS

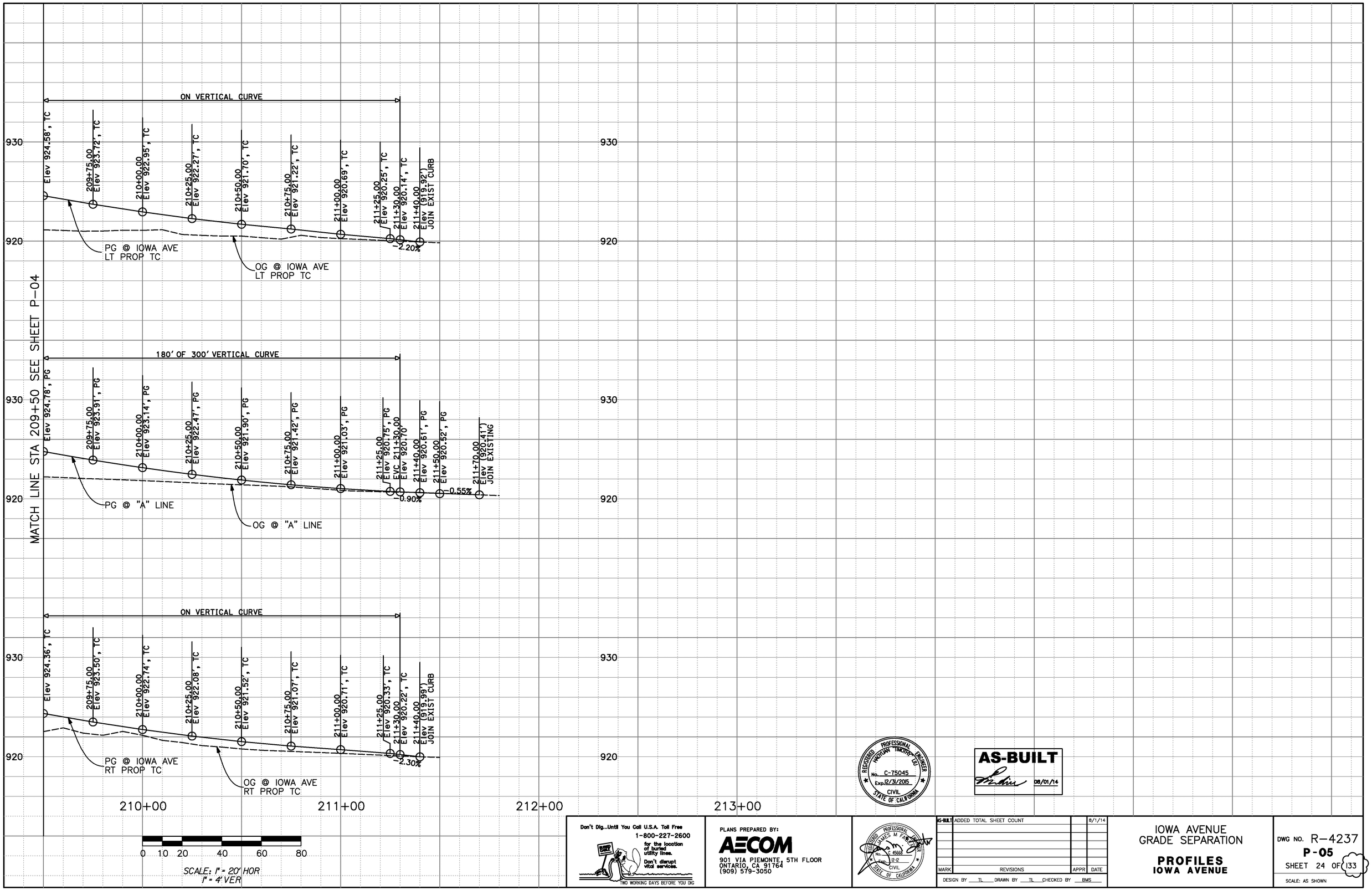

REGISTERED PROFESSIONAL ENGINEER MATTHEW TIMOTHY TULL No. C-75045 Exp. 12/31/2015 CIVIL STATE OF CALIFORNIA

AS-BUILT
08/01/14

Don't Dig...Until You Call U.S.A. Toll Free
1-800-227-2600
for the location of buried utility lines.
Don't disrupt vital services.
TWO WORKING DAYS BEFORE YOU DIG

PLANS PREPARED BY:
AECOM
901 VIA PIEMONTE, 5TH FLOOR
ONTARIO, CA 91764
(909) 579-3050

REGISTERED PROFESSIONAL ENGINEER JAMES M. FARRAR No. 45662 Exp. 12-12 CIVIL STATE OF CALIFORNIA

MARK	REVISIONS	APPR	DATE
AS-BUILT	ADDED TOTAL SHEET COUNT		8/1/14

DESIGN BY TL DRAWN BY TL CHECKED BY BMS

IOWA AVENUE
GRADE SEPARATION

PROFILES
IOWA AVENUE

DWG NO. R-4237
P-05
SHEET 24 OF 133

SCALE: AS SHOWN

AS-BUILTS

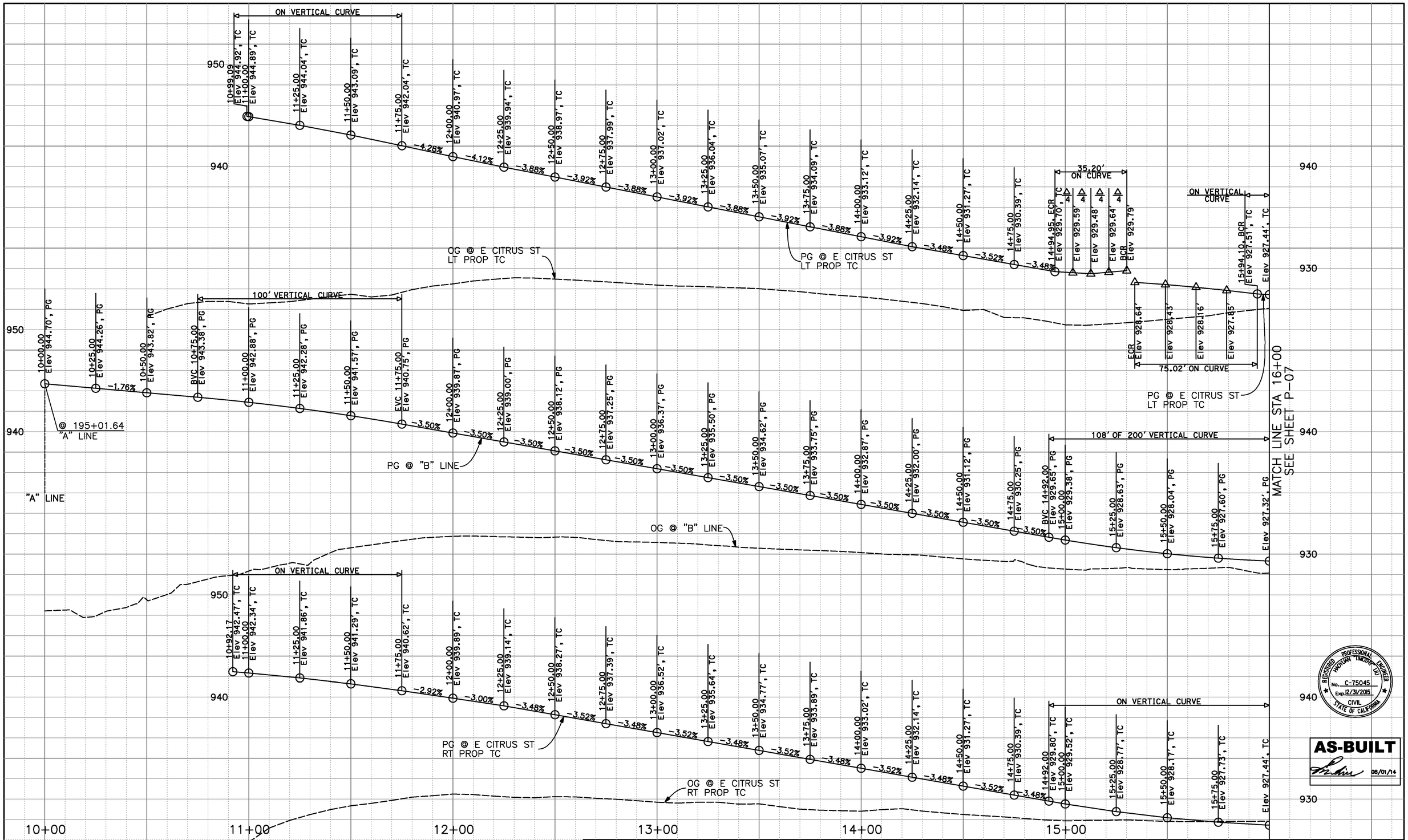

Don't Dig...Until You Call U.S.A. Toll Free
1-800-227-2600
for the location of buried utility lines.
Don't disrupt vital services.
TWO WORKING DAYS BEFORE YOU DIG

PLANS PREPARED BY:
AECOM
901 VIA PIEMONTE, 5TH FLOOR
ONTARIO, CA 91764
(909) 579-3050

REGISTERED PROFESSIONAL ENGINEER JAMES M. FARRAW No. C 45662 Exp. 12-12 CIVIL STATE OF CALIFORNIA

MARK	REVISIONS	APPR	DATE
AS-BUILT	ADDED TOTAL SHEET COUNT		8/1/14

DESIGN BY TL DRAWN BY TL CHECKED BY BMS

IOWA AVENUE
GRADE SEPARATION

PROFILES
EAST CITRUS STREET

DWG NO. R-4237
P-06
SHEET 25 OF 133
SCALE: AS SHOWN

AS-BUILTS

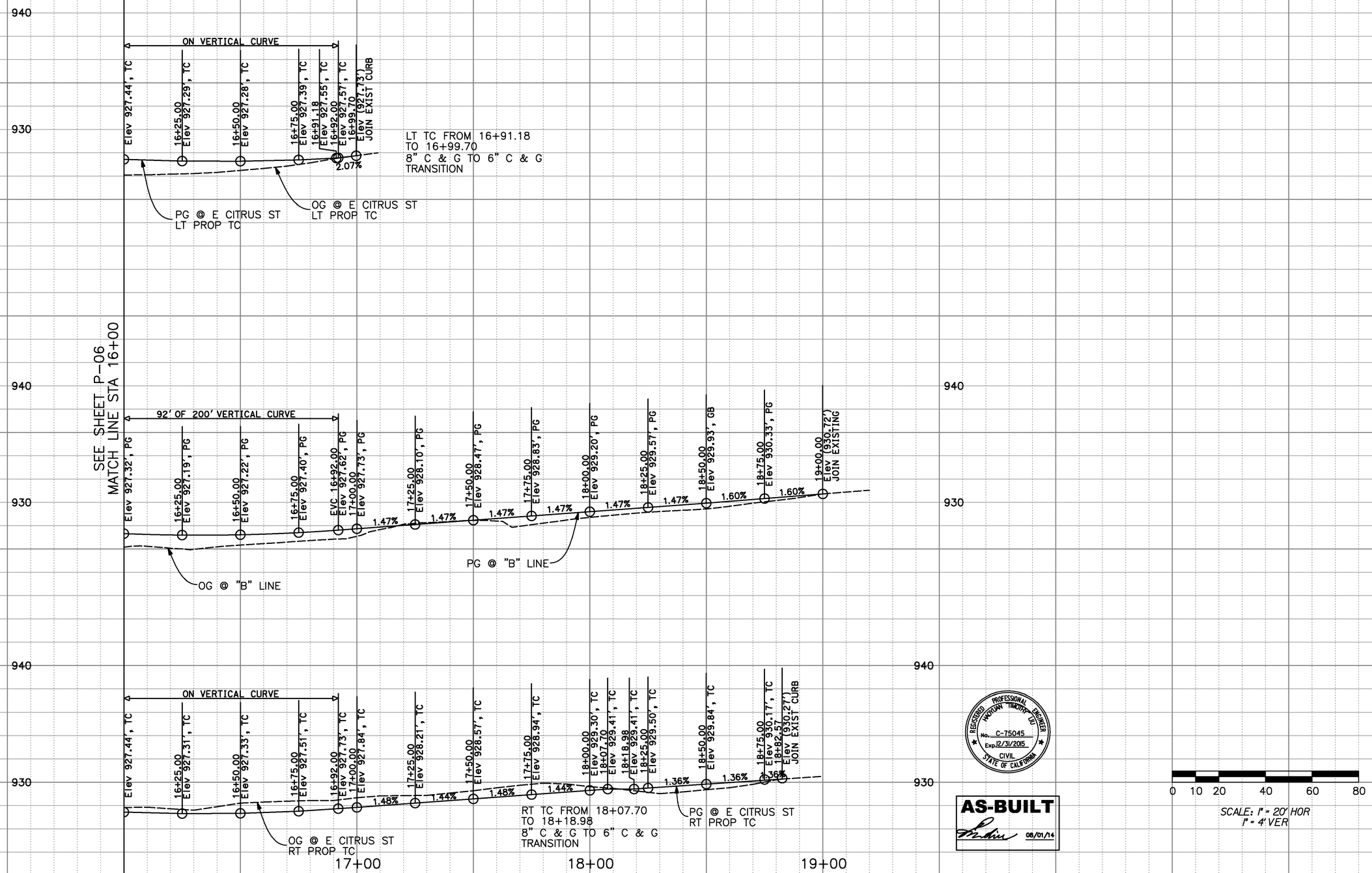

Don't Dig...Until You Call U.S.A. Toll Free
1-800-227-2600
for the location of buried utility lines.
Don't disrupt vital services.
TWO WORKING DAYS BEFORE YOU DIG

PLANS PREPARED BY:
AECOM
901 VIA PIEMONTE, 5TH FLOOR
ONTARIO, CA 91764
(909) 579-3050

REGISTERED PROFESSIONAL ENGINEER
JAMES M. FARRAR
No. C 45653
Exp. 12-12
CIVIL
STATE OF CALIFORNIA

MARK	REVISIONS	APPR	DATE
AS-BUILT	ADDED TOTAL SHEET COUNT		8/1/14

DESIGN BY TL DRAWN BY TL CHECKED BY BMS

IOWA AVENUE
GRADE SEPARATION

PROFILES
EAST CITRUS STREET

DWG NO. R-4237
P-07
SHEET 26 OF 133
SCALE: AS SHOWN

AS-BUILTS

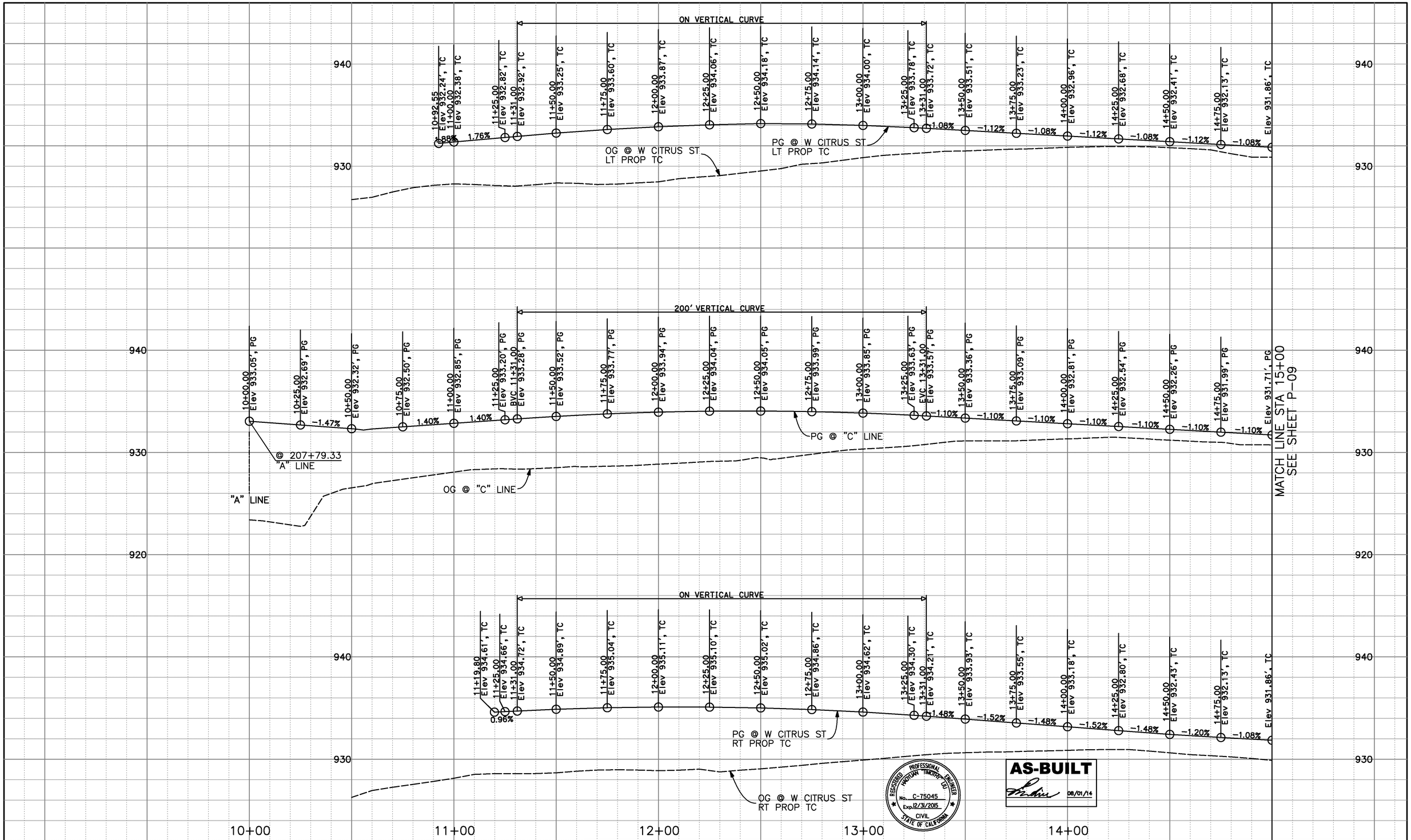

REGISTERED PROFESSIONAL ENGINEER HAROLAN TIMOTHY LIU No. C-75045 Exp. 12/31/2015 CIVIL STATE OF CALIFORNIA

AS-BUILT 08/01/14

Don't Dig...Until You Call U.S.A. Toll Free 1-800-227-2600 for the location of buried utility lines. Don't disrupt vital services.

TWO WORKING DAYS BEFORE YOU DIG

PLANS PREPARED BY:

AECOM

901 VIA PIEMONTE, 5TH FLOOR
ONTARIO, CA 91764
(909) 579-3050

REGISTERED PROFESSIONAL ENGINEER JAMES M. FARRAR No. C 45663 Exp. 12-12 CIVIL STATE OF CALIFORNIA

MARK	REVISIONS	APPR	DATE
AS-BUILT	ADDED TOTAL SHEET COUNT		8/1/14

DESIGN BY TL DRAWN BY TL CHECKED BY BMS

IOWA AVENUE
GRADE SEPARATION

PROFILES
WEST CITRUS STREET

DWG NO. R-4237
P-08
SHEET 27 OF 133
SCALE: AS SHOWN

AS-BUILTS

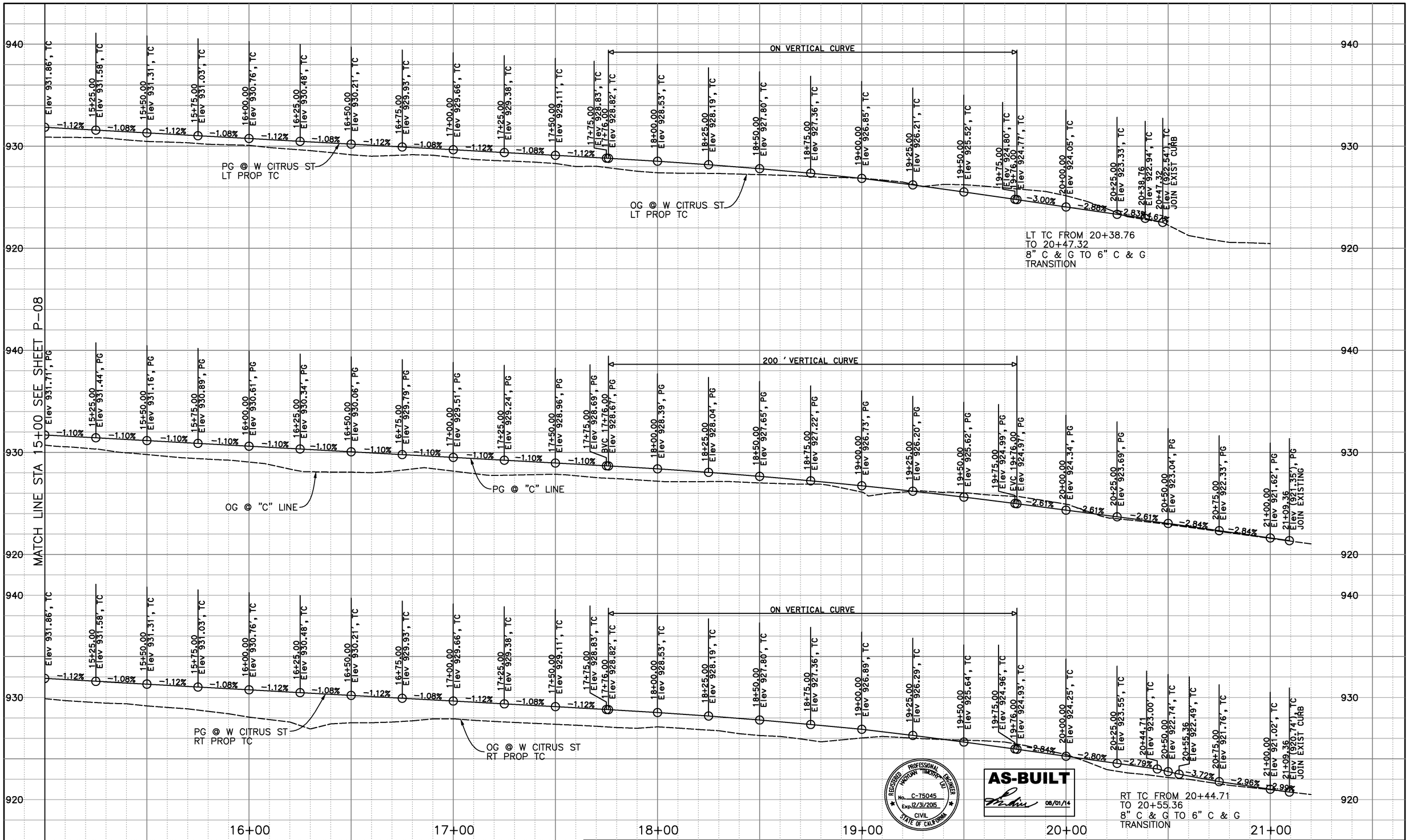

AS-BUILT
08/01/14

REGISTERED PROFESSIONAL ENGINEER HOFFMAN TIMOTHY LEE No. C-75045 Exp. 12/31/2015 CIVIL STATE OF CALIFORNIA

Don't Dig...Until You Call U.S.A. Toll Free
1-800-227-2600
for the location of buried utility lines.
Don't disrupt vital services.
TWO WORKING DAYS BEFORE YOU DIG

PLANS PREPARED BY:
AECOM
901 VIA PIEMONTE, 5TH FLOOR
ONTARIO, CA 91764
(909) 579-3050

REGISTERED PROFESSIONAL ENGINEER JAMES M. MAY No. C-65668 Exp. 12-12 CIVIL STATE OF CALIFORNIA

MARK	REVISIONS	APPR	DATE
AS-BUILT	ADDED TOTAL SHEET COUNT		8/1/14

DESIGN BY TL DRAWN BY TL CHECKED BY BMS

IOWA AVENUE
GRADE SEPARATION

PROFILES
WEST CITRUS STREET

DWG NO. R-4237
P-09
SHEET 28 OF 133
SCALE: AS SHOWN

AS-BUILTS

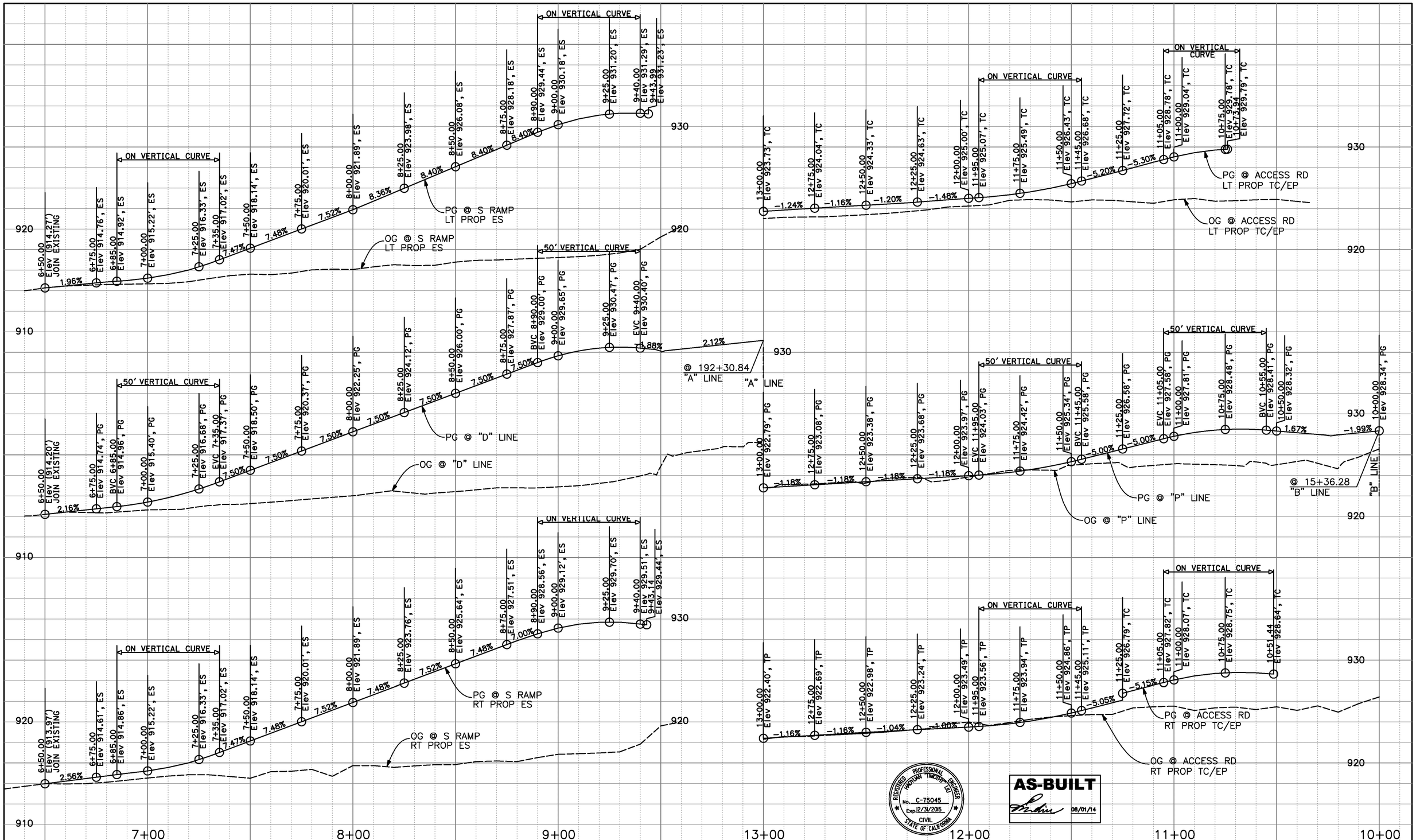

REGISTERED PROFESSIONAL ENGINEER HOFFMAN TIMOTHY LEE No. C-75045 Exp. 12/31/2015 CIVIL STATE OF CALIFORNIA

AS-BUILT 08/01/14

Don't Dig...Until You Call U.S.A. Toll Free 1-800-227-2600 for the location of buried utility lines. Don't disrupt vital services.

TWO WORKING DAYS BEFORE YOU DIG

PLANS PREPARED BY:

AECOM

901 VIA PIEMONTE, 5TH FLOOR
ONTARIO, CA 91764
(909) 579-3050

REGISTERED PROFESSIONAL ENGINEER JAMES M. FARRAR No. C-56668 Exp. 12-12 CIVIL STATE OF CALIFORNIA

MARK	REVISIONS	APPR	DATE
AS-BUILT	ADDED TOTAL SHEET COUNT		8/1/14

DESIGN BY TL DRAWN BY TL CHECKED BY BMS

IOWA AVENUE
GRADE SEPARATION

PROFILES
S RAMP AND ACCESS ROAD

DWG NO. R-4237
P-10
SHEET 29 OF 133

SCALE: AS SHOWN

AS-BUILTS

REGISTERED PROFESSIONAL ENGINEER HAYLIAN TIMOTHY LIU No. C-75045 Exp. 12/31/2015 CIVIL STATE OF CALIFORNIA

AS-BUILT 08/01/14

Don't Dig...Until You Call U.S.A. Toll Free 1-800-227-2600 for the location of buried utility lines. Don't disrupt vital services.

TWO WORKING DAYS BEFORE YOU DIG

PLANS PREPARED BY:

AECOM

901 VIA PIEMONTE, 5TH FLOOR
ONTARIO, CA 91764
(909) 579-3050

REGISTERED PROFESSIONAL ENGINEER JAMES M. FARRAR No. C 45663 Exp. 12-12 CIVIL STATE OF CALIFORNIA

MARK	REVISIONS	APPR	DATE
AS-BUILT	ADDED TOTAL SHEET COUNT		8/1/14

DESIGN BY TL DRAWN BY TL CHECKED BY BMS

IOWA AVENUE
GRADE SEPARATION

PROFILES
N RAMP & DWY 01

DWG NO. R-4237
P-11
SHEET 30 OF 133
SCALE: AS SHOWN

AS-BUILTS

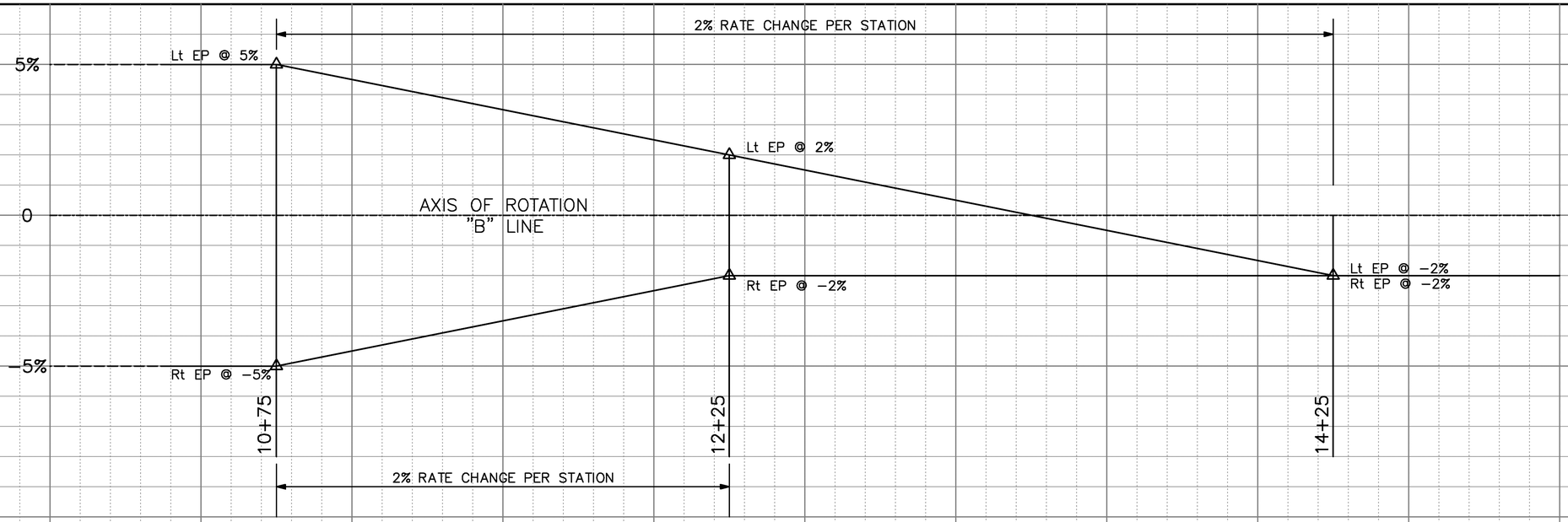

"B" LINE
(CITRUS STREET EAST)

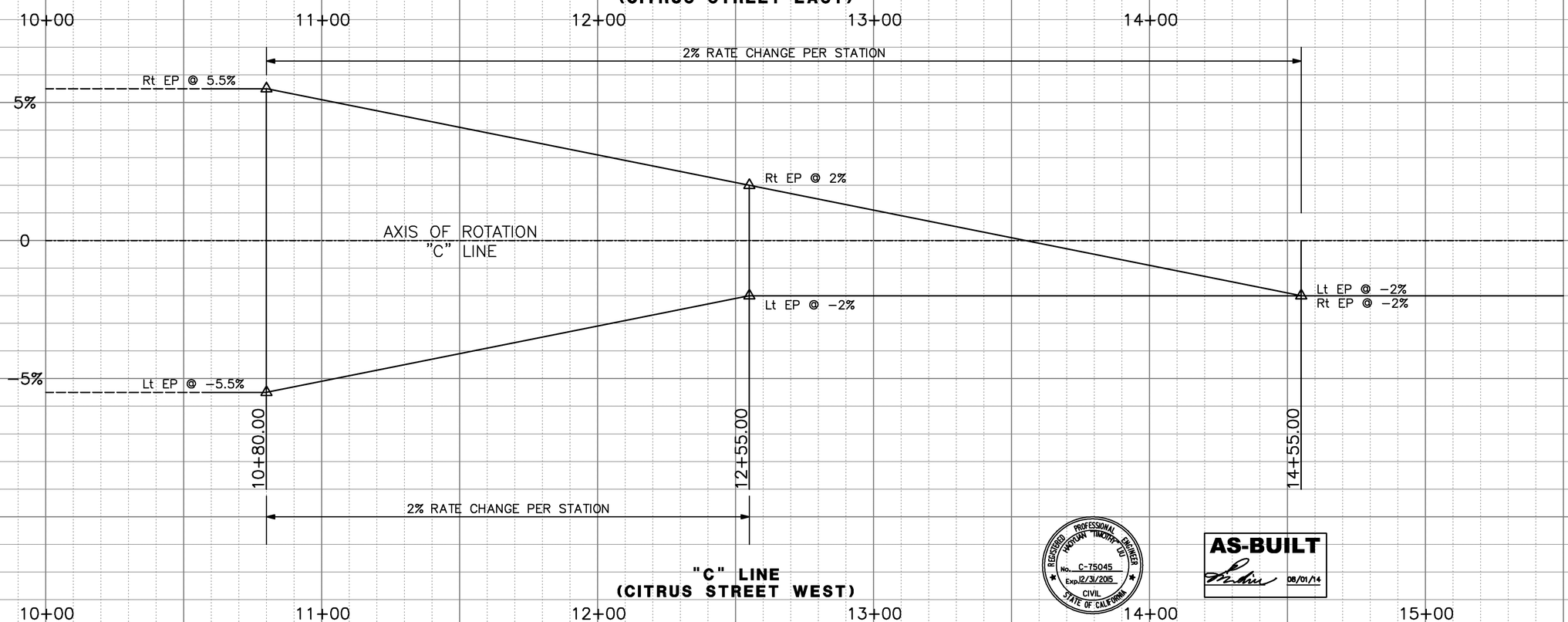

"C" LINE
(CITRUS STREET WEST)

REGISTERED PROFESSIONAL ENGINEER HAOYUAN TIMOTHY LIU No. C-75045 Exp. 12/31/2015 CIVIL STATE OF CALIFORNIA

AS-BUILT 08/01/14

0 10 20 40 60 80
SCALE: 1" = 20' HOR

Don't Dig...Until You Call U.S.A. Toll Free
1-800-227-2600
for the location of buried utility lines.
Don't disrupt vital services.
TWO WORKING DAYS BEFORE YOU DIG

PLANS PREPARED BY:
AECOM
901 VIA PIEMONTE, 5TH FLOOR
ONTARIO, CA 91764
(909) 579-3050

REGISTERED PROFESSIONAL ENGINEER HAOYUAN TIMOTHY LIU No. C-75045 Exp. 12/31/2015 CIVIL STATE OF CALIFORNIA

MARK	REVISIONS	APPR	DATE
AS-BUILT	ADDED TOTAL SHEET COUNT		8/1/14

DESIGN BY TL DRAWN BY TL CHECKED BY BMS

IOWA AVENUE
GRADE SEPARATION

SUPERELEVATION DIAGRAM

DWG NO. R-4237
SE-01
SHEET 31 OF 133
SCALE: AS SHOWN

AS-BUILTS

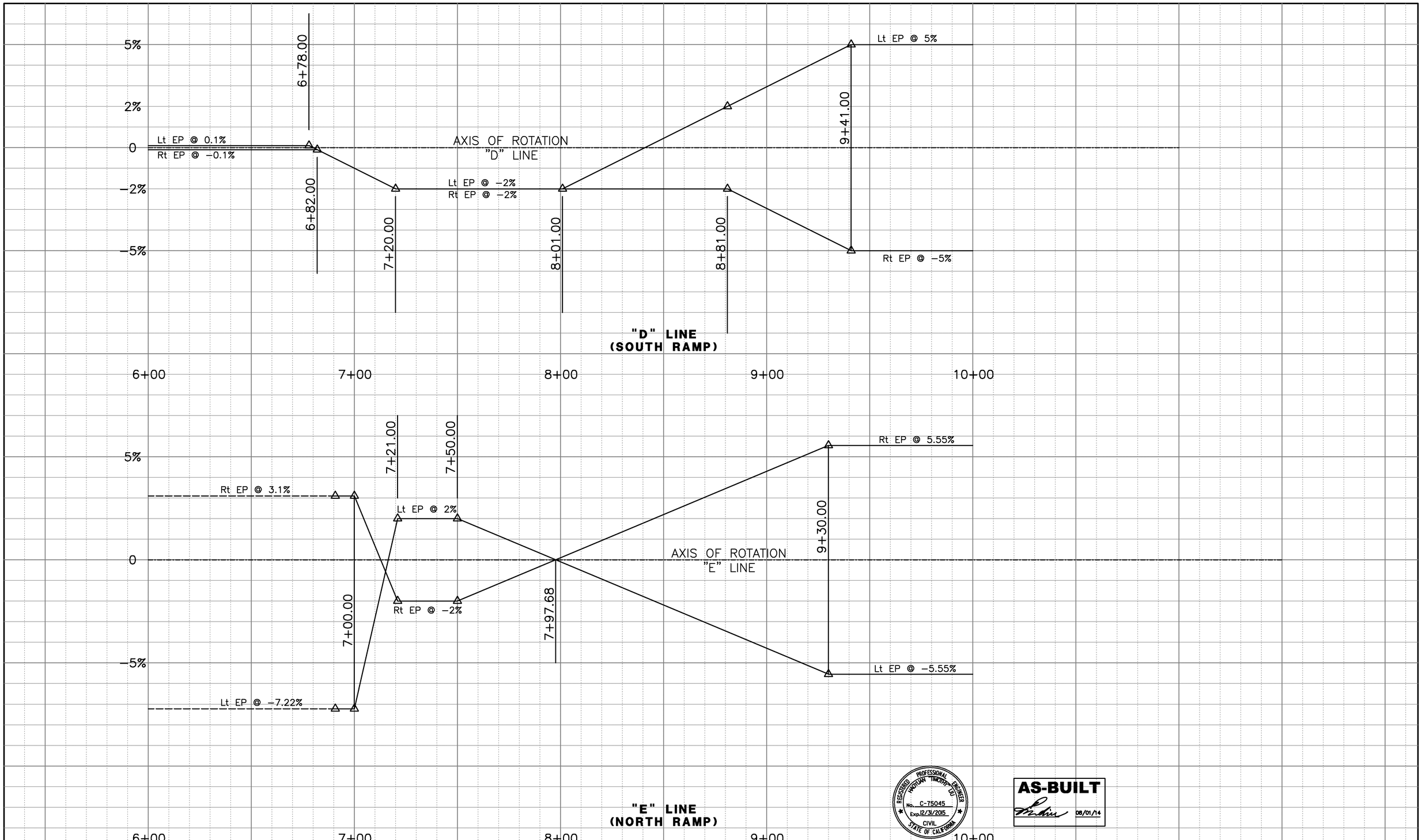

REGISTERED PROFESSIONAL ENGINEER
HAOYUAN TIMOTHY LIU
No. C-75045
Exp. 12/31/2015
CIVIL
STATE OF CALIFORNIA

AS-BUILT
08/01/14

Don't Dig...Until You Call U.S.A. Toll Free
1-800-227-2600
for the location of buried utility lines.
Don't disrupt vital services.
TWO WORKING DAYS BEFORE YOU DIG

PLANS PREPARED BY:
AECOM
901 VIA PIEMONTE, 5TH FLOOR
ONTARIO, CA 91764
(909) 579-3050

REGISTERED PROFESSIONAL ENGINEER
JAMES M FARRAR
No. C 45668
Exp. 12-12
CIVIL
STATE OF CALIFORNIA

MARK	REVISIONS	APPR	DATE
AS-BUILT	ADDED TOTAL SHEET COUNT		8/1/14

DESIGN BY TL DRAWN BY TL CHECKED BY BMS

IOWA AVENUE
GRADE SEPARATION

PROFILES

DWG NO. R-4237
SE-02
SHEET 32 OF 133
SCALE: AS SHOWN

AS-BUILTS

DEMOLITION NOTES:

1. SAWCUT EXISTING PAVEMENT
2. REMOVE EXISTING PAVEMENT
3. REMOVE TREES & ROOTS
4. REMOVE EXISTING CURB & GUTTER
5. REMOVE EXISTING CROSS GUTTER
6. REMOVE EXISTING SIDEWALK
8. REMOVE EXISTING MEDIAN ISLAND
9. REMOVE EXISTING FENCE
12. PROTECT IN PLACE
13. RELOCATE BY OTHERS
14. REMOVE SIGN AND/OR POST
20. REMOVE EXISTING
22. ABANDONED IN PLACE
24. RELOCATE BY CONTRACTOR
25. ADJUST TO GRADE
27. RELOCATED BY CITY'S FORCE
28. REMOVED BY CITY'S FORCE

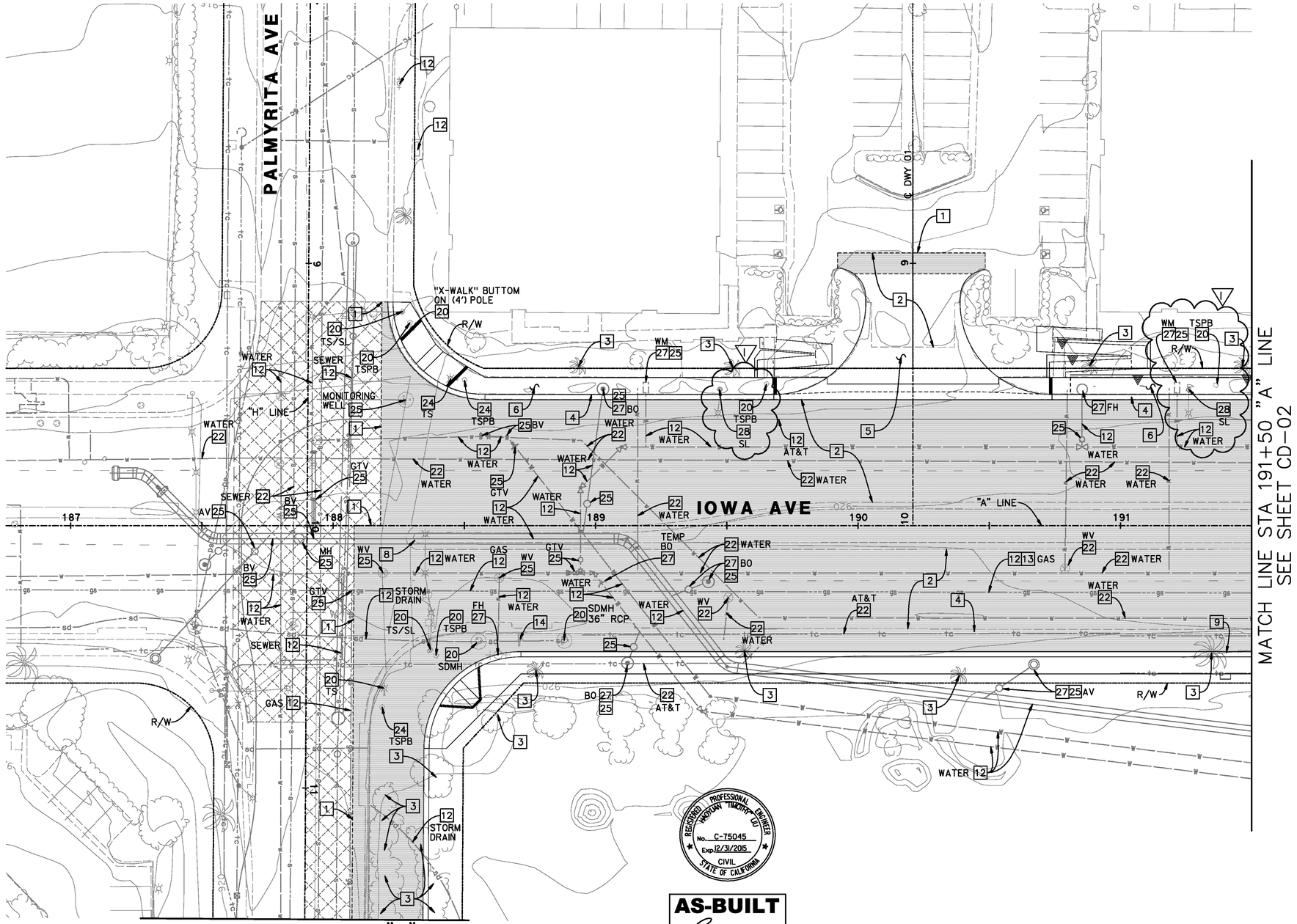

REGISTERED PROFESSIONAL ENGINEER JAMOPAN TIMOTHY DU No. C-75045 Exp. 12/31/2015 CIVIL STATE OF CALIFORNIA

AS-BUILT 08/01/14

0 10 20 40 60 80
SCALE: 1" = 20'

Don't Dig...Until You Call U.S.A. Toll Free 1-800-227-2600 for the location of buried utility lines. Don't disrupt vital services.
TWO WORKING DAYS BEFORE YOU DIG

PLANS PREPARED BY:
AECOM
901 VIA PIEMONTE, 5TH FLOOR
ONTARIO, CA 91764
(909) 579-3050

REGISTERED PROFESSIONAL ENGINEER JAMES M. FARRAR No. C 45663 Exp. 12-12 CIVIL STATE OF CALIFORNIA

MARK	REVISIONS	APPR	DATE
7	ADDENDUM NO.3		5/9/12
	ADDED NOTE 28 TO DEMOLITION NOTES		
	MODIFIED SL NOTE TO 28		
AS-BUILT	ADDED TOTAL SHEET COUNT		8/1/14

DESIGN BY MO DRAWN BY MO CHECKED BY BMS

IOWA AVENUE
GRADE SEPARATION
CONSTRUCTION DEMOLITION

DWG NO. R-4237
CD-01
SHEET 33 OF 133
SCALE: AS SHOWN

AS-BUILTS

DEMOLITION NOTES:

1	SAWCUT EXISTING PAVEMENT
2	REMOVE EXISTING PAVEMENT
3	REMOVE TREES & ROOTS
4	REMOVE EXISTING CURB & GUTTER
6	REMOVE EXISTING SIDEWALK
8	REMOVE EXISTING MEDIAN ISLAND
9	REMOVE EXISTING FENCE
12	PROTECT IN PLACE
13	RELOCATE BY OTHERS
14	REMOVE SIGN AND/OR POST
20	REMOVE EXISTING
22	ABANDONED IN PLACE
25	ADJUST TO GRADE
27	RELOCATED BY CITY'S FORCE

REGISTERED PROFESSIONAL ENGINEER HOTVAN TAKOTAP LIU No. C-75045 Exp. 12/31/2015 CIVIL STATE OF CALIFORNIA

AS-BUILT
08/01/14

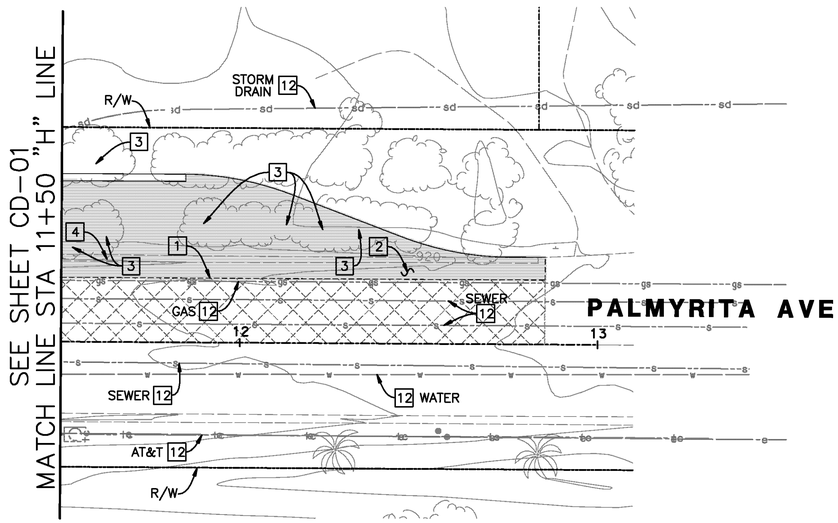

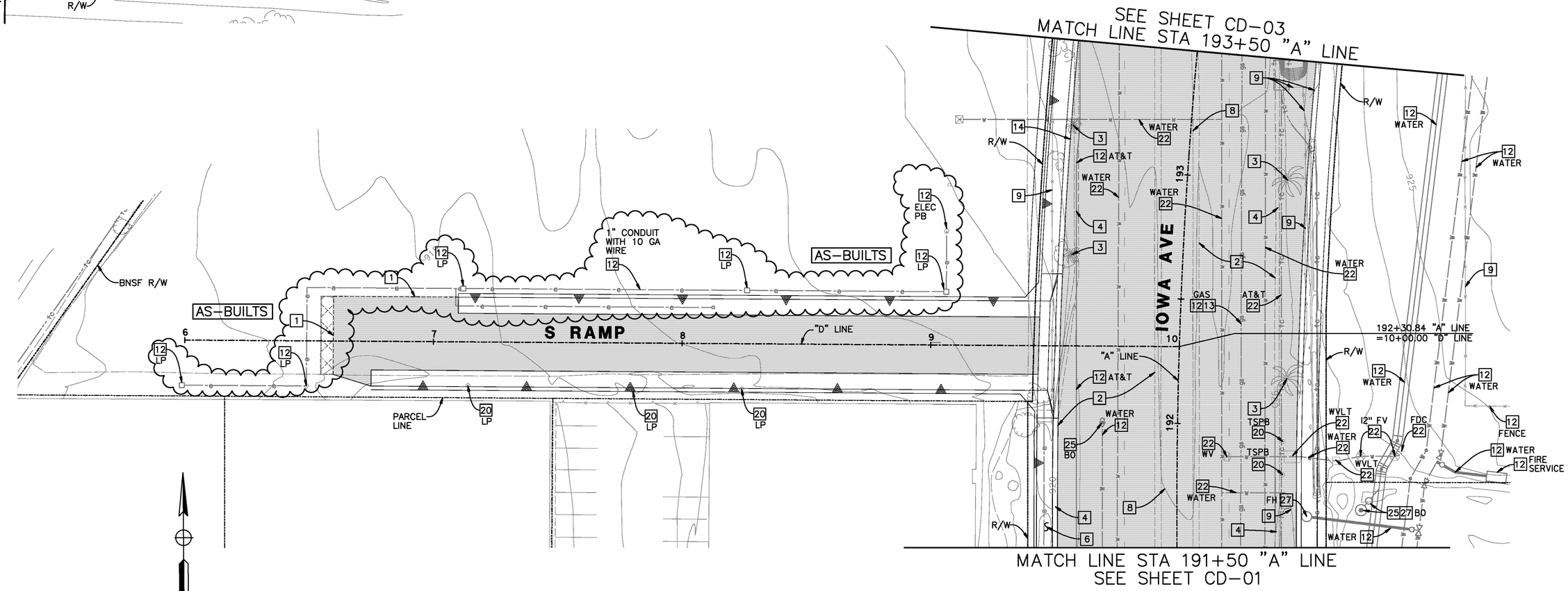

0 10 20 40 60 80
SCALE: 1" = 20'

DRAFT SUBMITTAL - NOT FOR CONSTRUCTION

Don't Dig...Until You Call U.S.A. Toll Free
1-800-227-2600
for the location of buried utility lines.
Don't disrupt vital services.
TWO WORKING DAYS BEFORE YOU DIG

PLANS PREPARED BY:
AECOM
901 VIA PIEMONTE, 5TH FLOOR
ONTARIO, CA 91764
(909) 579-3050

REGISTERED PROFESSIONAL ENGINEER JAMES M FARRIS No. C-45663 Exp. 12-12 CIVIL STATE OF CALIFORNIA

MARK	REVISIONS	APPR	DATE
AS-BUILT	REVISED STREET LIGHTING CONDUIT		8/1/14
	ADDED TOTAL SHEET COUNT		

DESIGN BY MO DRAWN BY MO CHECKED BY BMS

IOWA AVENUE
GRADE SEPARATION
CONSTRUCTION DEMOLITION

DWG NO. R-4237
CD-02
SHEET 34 OF 133
SCALE: AS SHOWN

AS-BUILTS

DEMOLITION NOTES:

- 2 REMOVE EXISTING PAVEMENT
- 3 REMOVE TREES & ROOTS
- 4 REMOVE EXISTING CURB & GUTTER
- 5 REMOVE EXISTING CROSS GUTTER
- 8 REMOVE EXISTING MEDIAN ISLAND
- 9 REMOVE EXISTING FENCE
- 12 PROTECT IN PLACE
- 13 RELOCATE BY OTHERS
- 14 REMOVE SIGN AND/OR POST
- 20 REMOVE EXISTING
- 21 REMOVE EXISTING DRIVEWAY
- 22 ABANDONED IN PLACE
- 24 RELOCATE BY CONTRACTOR
- 25 ADJUST TO GRADE
- 27 RELOCATED BY CITY'S FORCE
- 28 REMOVED BY CITY'S FORCE

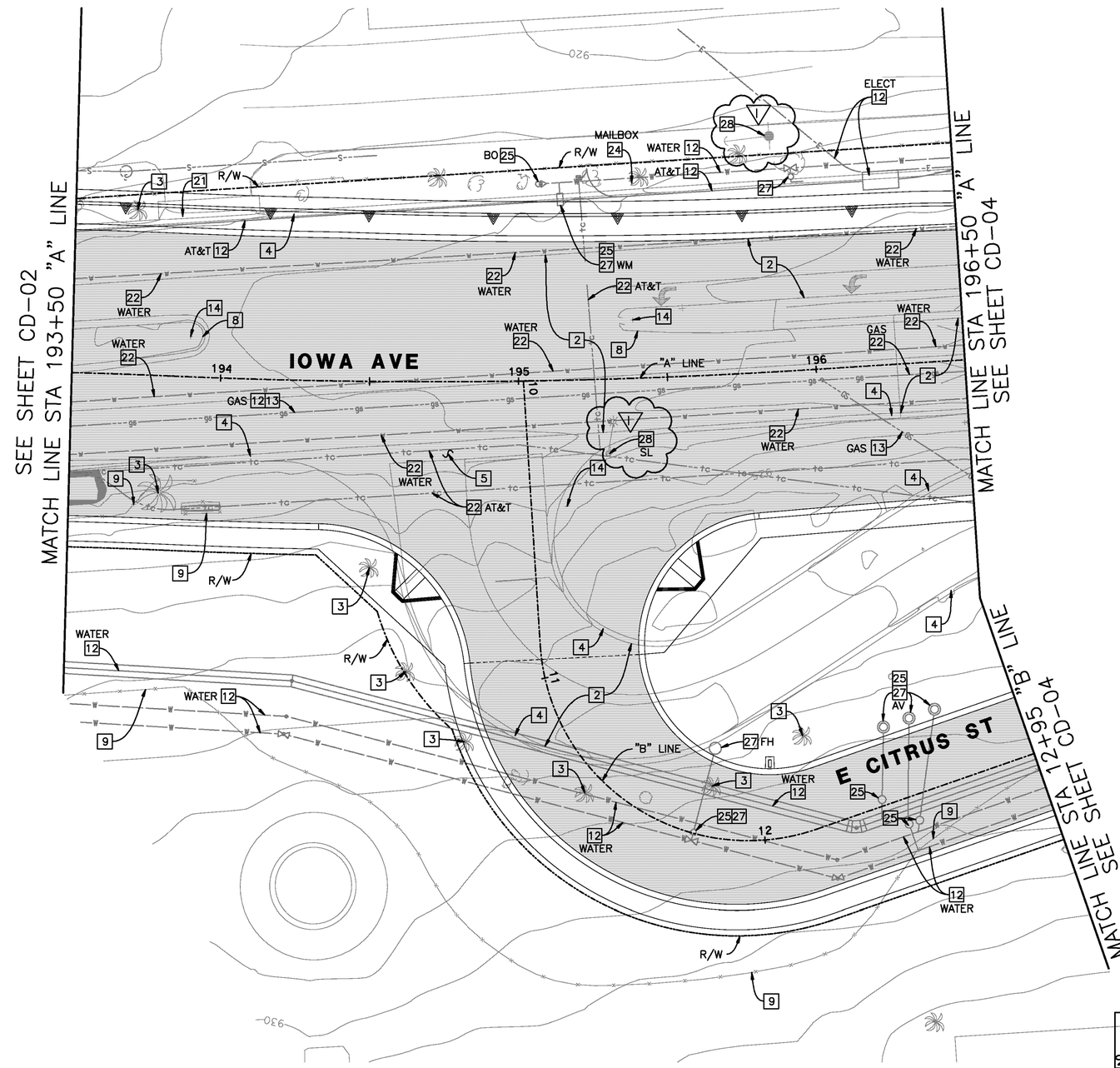

0 10 20 40 60 80

SCALE: 1" = 20'

AS-BUILT

08/01/14

REGISTERED PROFESSIONAL ENGINEER MORYAM "MORY" MO No. C-75045 Exp. 12/31/2015 CIVIL STATE OF CALIFORNIA

Don't Dig...Until You Call U.S.A. Toll Free
1-800-227-2600
for the location of buried utility lines.
Don't disrupt vital services.
TWO WORKING DAYS BEFORE YOU DIG

PLANS PREPARED BY:
AECOM
901 VIA PIEMONTE, 5TH FLOOR
ONTARIO, CA 91764
(909) 579-3050

REGISTERED PROFESSIONAL ENGINEER JAMES M FARMER No. C 45663 Exp. 12-12 CIVIL STATE OF CALIFORNIA

MARK	REVISIONS	APPR	DATE
7	ADDENDUM NO.3		5/9/12
	ADDED NOTE 28 TO DEMOLITION NOTES		
	MODIFIED POWER POLE NOTE TO 28		
	MODIFIED SL NOTE TO 28		
AS-BUILT	ADDED TOTAL SHEET COUNT		8/1/14

DESIGN BY MO DRAWN BY MO CHECKED BY BMS

IOWA AVENUE
GRADE SEPARATION

CONSTRUCTION DEMOLITION

DWG NO. R-4237
CD-03
SHEET 35 OF 133

SCALE: AS SHOWN

AS-BUILTS

DEMOLITION NOTES:

1. SAWCUT EXISTING PAVEMENT
2. REMOVE EXISTING PAVEMENT
3. REMOVE TREES & ROOTS
4. REMOVE EXISTING CURB & GUTTER
6. REMOVE EXISTING SIDEWALK
8. REMOVE EXISTING MEDIAN ISLAND
9. REMOVE EXISTING FENCE
12. PROTECT IN PLACE
13. RELOCATE BY OTHERS
14. REMOVE SIGN AND/OR POST
16. REMOVE BY OTHERS
20. REMOVE EXISTING
21. REMOVE EXISTING DRIVEWAY
22. ABANDONED IN PLACE
25. ADJUST TO GRADE
27. RELOCATED BY CITY'S FORCE
28. REMOVED BY CITY'S FORCE

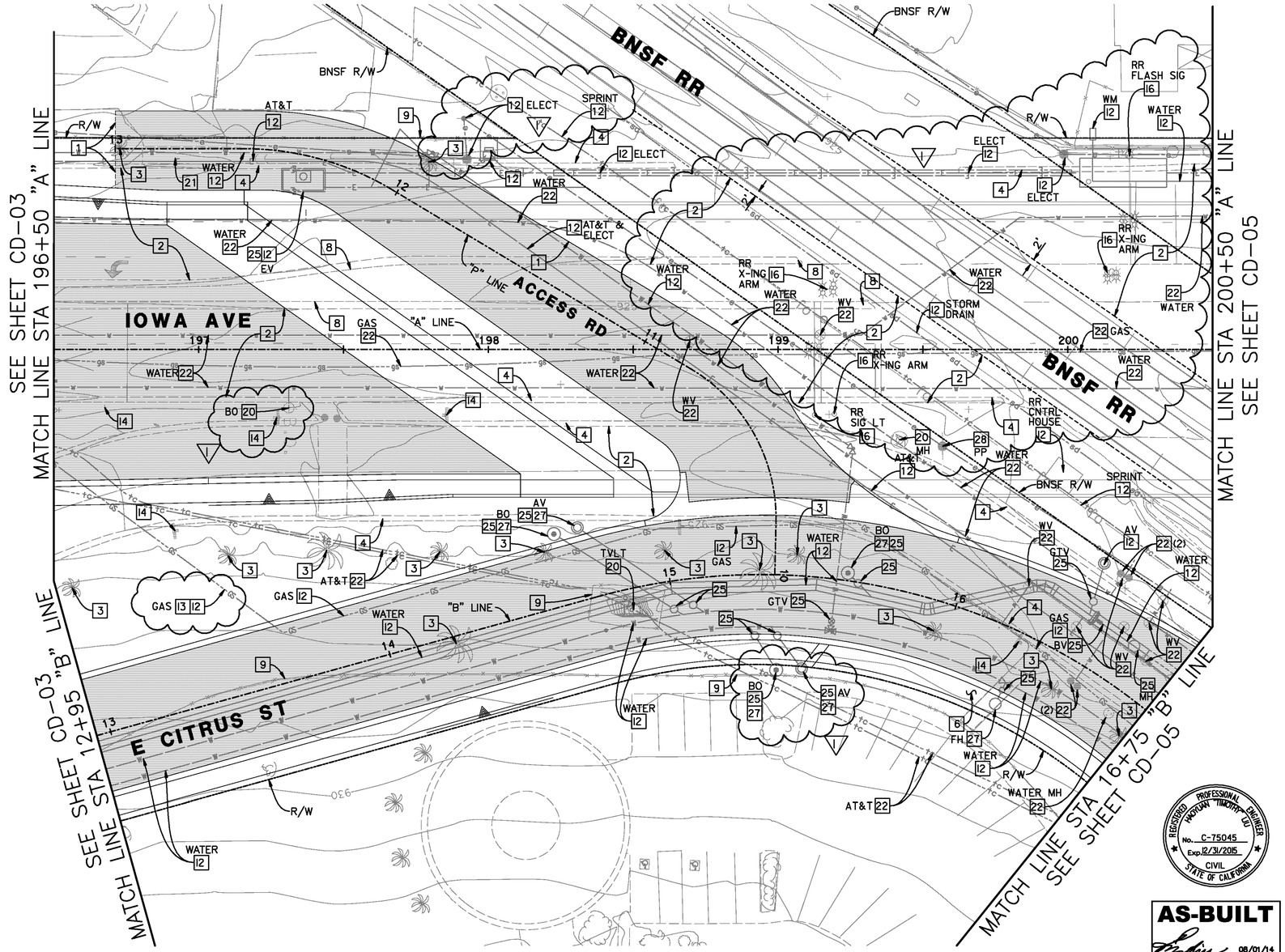

AS-BUILT
08/01/14

REGISTERED PROFESSIONAL ENGINEER ANTHONY "TIMOTHY" LIU No. C-75045 Exp. 12/31/2015 CIVIL STATE OF CALIFORNIA

0 10 20 40 60 80
SCALE: 1" = 20'

Don't Dig...Until You Call U.S.A. Toll Free
1-800-227-2600
for the location of buried utility lines.
Don't disrupt vital services.
TWO WORKING DAYS BEFORE YOU DIG

PLANS PREPARED BY:
AECOM
901 VIA PIEMONTE, 5TH FLOOR
ONTARIO, CA 91764
(909) 579-3050

REGISTERED PROFESSIONAL ENGINEER JAMES M. FARRAR No. C-45662 P-2 CIVIL STATE OF CALIFORNIA

AS-BUILT ADDED TOTAL SHEET COUNT 8/1/14

MARK	REVISIONS	APPR	DATE
7	ADDENDUM NO.3 –ADDED 28 TO DEMO NOTES		5/9/12
	MODIFIED GAS NOTE TO 12 & 13		
	MODIFIED BO NOTE TO 13		
	MODIFIED BO & AV NOTES TO 25 & 27		
	MODIFIED SPRINT & ELECT NOTES TO 12		
	ADDED NOTE 2 NEAR RR TRACKS		

DESIGN BY MO DRAWN BY MO CHECKED BY BMS

IOWA AVENUE
GRADE SEPARATION

CONSTRUCTION DEMOLITION

DWG NO. R-4237
CD-04
SHEET 36 OF 133
SCALE: AS SHOWN

AS-BUILTS

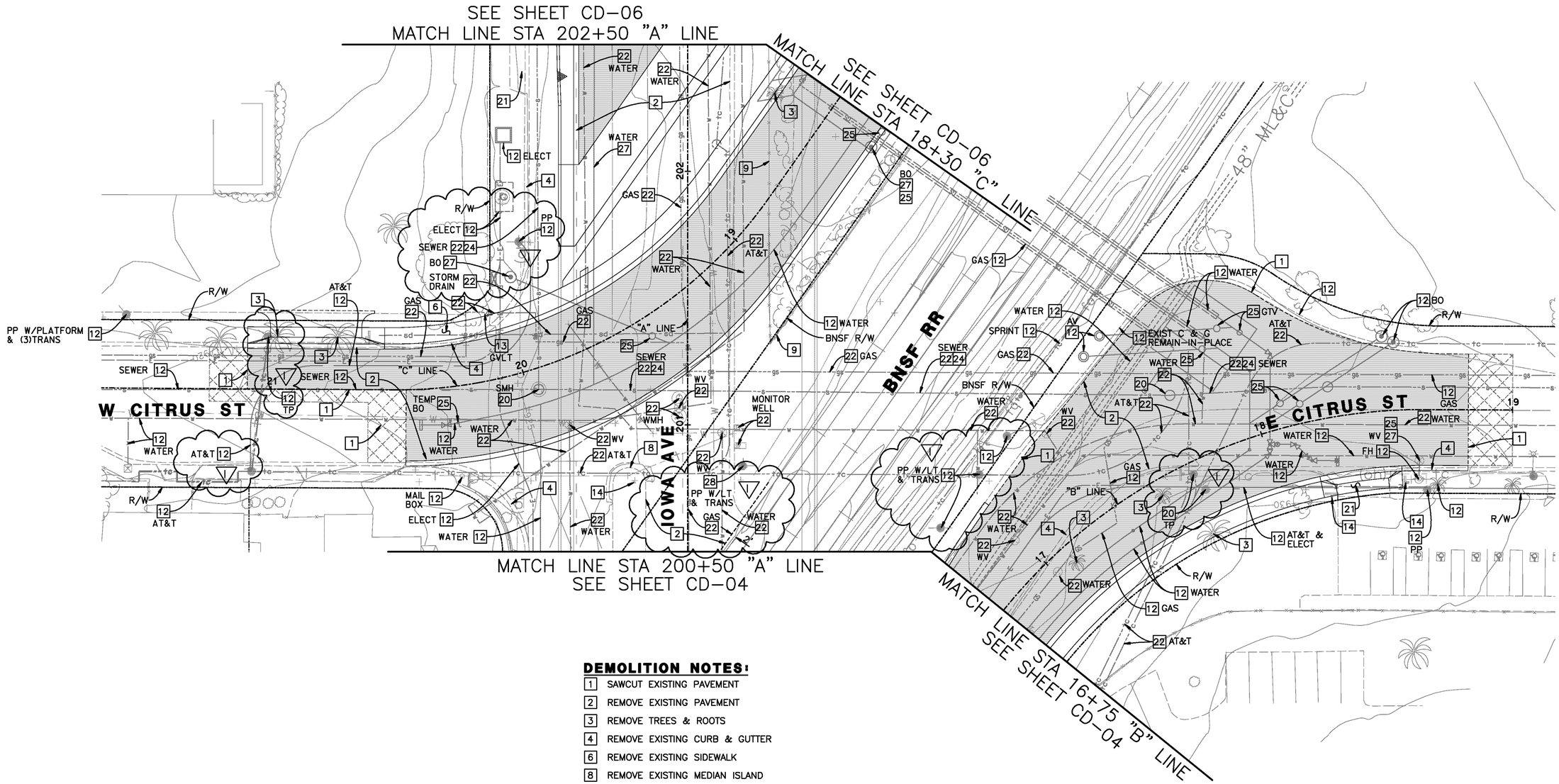

DEMOLITION NOTES:

1. SAWCUT EXISTING PAVEMENT
2. REMOVE EXISTING PAVEMENT
3. REMOVE TREES & ROOTS
4. REMOVE EXISTING CURB & GUTTER
6. REMOVE EXISTING SIDEWALK
8. REMOVE EXISTING MEDIAN ISLAND
9. REMOVE EXISTING FENCE
12. PROTECT IN PLACE
13. RELOCATE BY OTHERS
14. REMOVE SIGN AND/OR POST
16. REMOVE BY OTHERS
20. REMOVE EXISTING
21. REMOVE EXISTING DRIVEWAY
22. ABANDONED IN PLACE
24. RELOCATE BY CONTRACTOR
25. ADJUST TO GRADE
27. RELOCATED BY CITY'S FORCE
28. REMOVED BY CITY'S FORCE

REGISTERED PROFESSIONAL ENGINEER HUSTON, TIMOTHY LEE No. C-75045 Exp. 12/31/2015 CIVIL STATE OF CALIFORNIA

AS-BUILT
08/01/14

0 10 20 40 60 80
SCALE: 1" = 20'

Don't Dig...Until You Call U.S.A. Toll Free 1-800-227-2600 for the location of buried utility lines. Don't disrupt vital services.
TWO WORKING DAYS BEFORE YOU DIG

PLANS PREPARED BY:
AECOM
901 VIA PIEMONTE, 5TH FLOOR
ONTARIO, CA 91764
(909) 579-3050

REGISTERED PROFESSIONAL ENGINEER JAMES M. FARRAR No. C-45668 Exp. 12-31 CIVIL STATE OF CALIFORNIA

MARK	REVISIONS	APPR	DATE
AS-BUILT	ADDED TOTAL SHEET COUNT		8/1/14
7	ADDENDUM NO.3 – MODIFIED SD NOTE TO 22		5/9/12
	MODIFIED AT&T & TP NOTES TO 12		
	MODIFIED PP W/LT & TRANS NOTE TO 28		
	ADDED NOTE 2 NEAR RR TRACK, 12 AT PP		
	MODIFIED PP W/LT & TRANS NOTE TO 12		
	MODIFIED TP NOTE TO 20, 28 TO DEM NOTES		

DESIGN BY MO DRAWN BY MO CHECKED BY BMS

IOWA AVENUE
GRADE SEPARATION

CONSTRUCTION DEMOLITION

DWG NO. R-4237
CD-05
SHEET 37 OF 133
SCALE: AS SHOWN

AS-BUILTS

DEMOLITION NOTES:

- 2 REMOVE EXISTING PAVEMENT
- 3 REMOVE TREES & ROOTS
- 4 REMOVE EXISTING CURB & GUTTER
- 6 REMOVE EXISTING SIDEWALK
- 9 REMOVE EXISTING FENCE
- 12 PROTECT IN PLACE
- 13 RELOCATE BY OTHERS
- 16 REMOVE BY OTHERS
- 20 REMOVE EXISTING
- 21 REMOVE EXISTING DRIVEWAY
- 22 ABANDONED IN PLACE
- 24 RELOCATE BY CONTRACTOR
- 25 ADJUST TO GRADE
- 27 RELOCATED BY CITY'S FORCE
- 28 REMOVED BY CITY'S FORCE

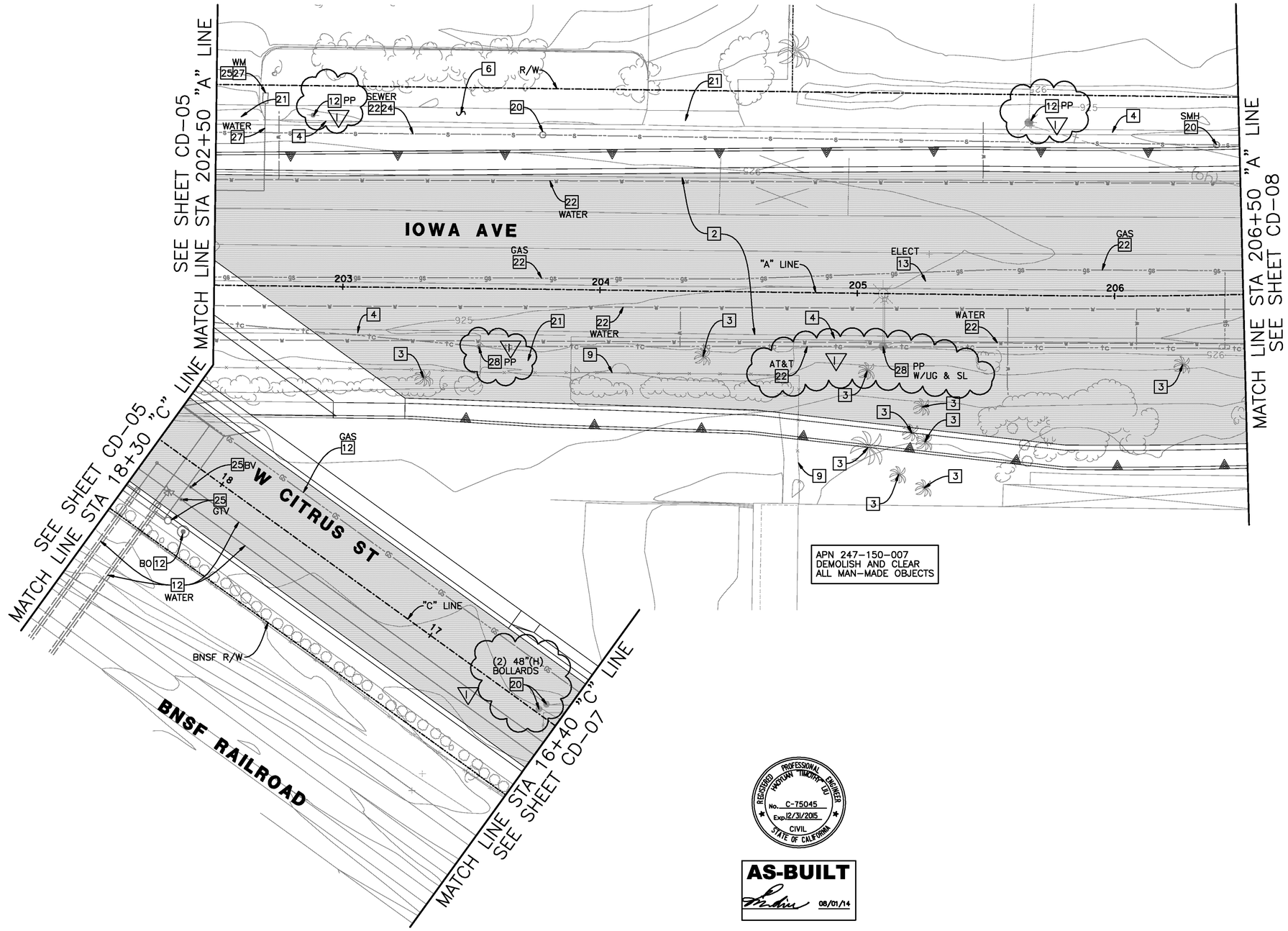

REGISTERED PROFESSIONAL ENGINEER HUYUAN TIMOTHY DU No. C-75045 Exp. 12/31/2015 CIVIL STATE OF CALIFORNIA

AS-BUILT
08/01/14

0 10 20 40 60 80
SCALE: 1" = 20'

Don't Dig...Until You Call U.S.A. Toll Free
1-800-227-2600
for the location of buried utility lines.
Don't disrupt vital services.
TWO WORKING DAYS BEFORE YOU DIG

PLANS PREPARED BY:
AECOM
901 VIA PIEMONTE, 5TH FLOOR
ONTARIO, CA 91764
(909) 579-3050

REGISTERED PROFESSIONAL ENGINEER JAMES M FARRAW No. C-45662 Exp. 12-12 CIVIL STATE OF CALIFORNIA

AS-BUILT ADDED TOTAL SHEET COUNT 8/1/14

MARK	REVISIONS	APPR	DATE
7	ADDENDUM NO.3 –ADDED 28 TO DEM NOTES		5/8/12
	ADDED PP NOTE 12		
	MODIFIED (2) 48"(H) BOLLARDS NOTE TO 20		
	MODIFIED PP NOTE TO 28		
	MODIFIED AT&T NOTE TO 22, PP NOTE TO 12		
	MODIFIED PP W/UG & SL NOTE TO 28		

DESIGN BY MO DRAWN BY MO CHECKED BY BMS

IOWA AVENUE
GRADE SEPARATION

CONSTRUCTION DEMOLITION

DWG NO. R-4237
CD-06
SHEET 38 OF 133
SCALE: AS SHOWN

AS-BUILTS

DEMOLITION NOTES:

- 9 REMOVE EXISTING FENCE
- 12 PROTECT IN PLACE
- 13 RELOCATE BY OTHERS
- 15 REMOVE EXISTING AC BERM
- 20 REMOVE EXISTING
- 23 DEMOLISH BUILDINGS AND FOOTINGS
- 25 ADJUST TO GRADE
- 27 RELOCATE BY CITY'S FORCE

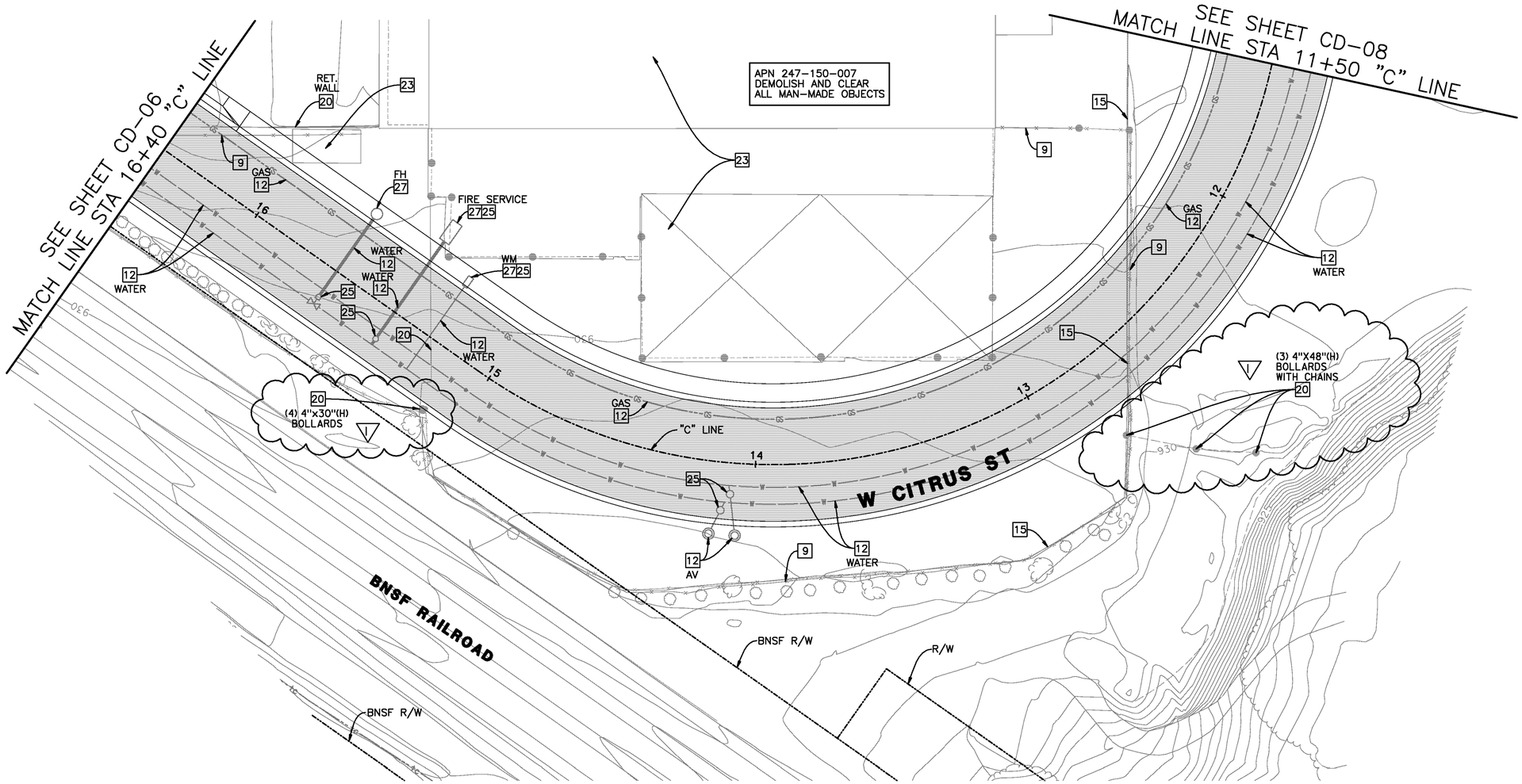

REGISTERED PROFESSIONAL ENGINEER
HAOYUAN "TIMOTHY" DU
No. C-75045
Exp. 12/31/2015
CIVIL
STATE OF CALIFORNIA

AS-BUILT
08/01/14

0 10 20 40 60 80
SCALE: 1" = 20'

Don't Dig...Until You Call U.S.A. Toll Free
1-800-227-2600
for the location of buried utility lines.
Don't disrupt vital service.
TWO WORKING DAYS BEFORE YOU DIG

PLANS PREPARED BY:
AECOM
901 VIA PIEMONTE, 5TH FLOOR
ONTARIO, CA 91764
(909) 579-3050

REGISTERED PROFESSIONAL ENGINEER
JAMES M. FARRAR
No. C 45668
Exp. 12-12
CIVIL
STATE OF CALIFORNIA

MARK	REVISIONS	APPR	DATE
7	ADDENDUM NO.3		5/9/12
	MODIFIED (4) 4"X30"(H) BOLLARDS		
	NOTE TO 20		
	MODIFIED (3) 4"X48"(H) BOLLARDS WITH		
	CHAINS NOTE TO 20		
AS-BUILT	ADDED TOTAL SHEET COUNT		8/1/14

DESIGN BY MO DRAWN BY MO CHECKED BY BMS

IOWA AVENUE
GRADE SEPARATION

CONSTRUCTION DEMOLITION

DWG NO. R-4237
CD-07
SHEET 39 OF 133
SCALE: AS SHOWN

AS-BUILTS

DEMOLITION NOTES:

- 1 SAWCUT EXISTING PAVEMENT
- 2 REMOVE EXISTING PAVEMENT
- 3 REMOVE TREES & ROOTS
- 4 REMOVE EXISTING CURB & GUTTER
- 6 REMOVE EXISTING SIDEWALK
- 12 PROTECT IN PLACE
- 13 RELOCATE BY OTHERS
- 14 REMOVE SIGN AND /OR POST
- 16 REMOVE BY OTHERS
- 21 REMOVE EXISTING DRIVEWAY
- 22 ABANDON IN PLACE
- 25 ADJUST TO GRADE
- 27 RELOCATED BY CITY'S FORCE
- 28 REMOVED BY CITY'S FORCE

0 10 20 40 60 80
SCALE: 1" = 20'

REGISTERED PROFESSIONAL ENGINEER HAOTIAN "TIMOTHY" LU No. C-75045 Exp. 12/31/2015 CIVIL STATE OF CALIFORNIA

AS-BUILT
08/01/14

Don't Dig...Until You Call U.S.A. Toll Free
1-800-227-2600
for the location of buried utility lines.
Don't disrupt vital services.
TWO WORKING DAYS BEFORE YOU DIG

PLANS PREPARED BY:
AECOM
901 VIA PIEMONTE, 5TH FLOOR
ONTARIO, CA 91764
(909) 579-3050

REGISTERED PROFESSIONAL ENGINEER JAMES M FAIRBANK No. C 56668 Exp. 12-12 CIVIL STATE OF CALIFORNIA

MARK	REVISIONS	APPR	DATE
V	ADDENDUM NO.3		5/9/12
	ADDED NOTE 28 TO DEMOLITION NOTES		
	MODIFIED PP NOTE TO 28		
	ADDED PP NOTE 12		
AS-BUILT	ADDED TOTAL SHEET COUNT		8/1/14

DESIGN BY MO DRAWN BY MO CHECKED BY BMS

IOWA AVENUE
GRADE SEPARATION
CONSTRUCTION DEMOLITION

DWG NO. R-4237
CD-08
SHEET 40 OF 133
SCALE: AS SHOWN

AS-BUILTS

DEMOLITION NOTES:

1. SAWCUT EXISTING PAVEMENT
2. REMOVE EXISTING PAVEMENT
3. REMOVE TREES & ROOTS
4. REMOVE EXISTING CURB & GUTTER
6. REMOVE EXISTING SIDEWALK
12. PROTECT IN PLACE
13. RELOCATE BY OTHERS
16. REMOVE BY OTHERS
20. REMOVE EXISTING
21. REMOVE EXISTING DRIVEWAY
22. ABANDON IN PLACE
24. RELOCATE BY CONTRACTOR
25. ADJUST TO GRADE
27. RELOCATED BY CITY'S FORCE
28. REMOVED BY CITY'S FORCE

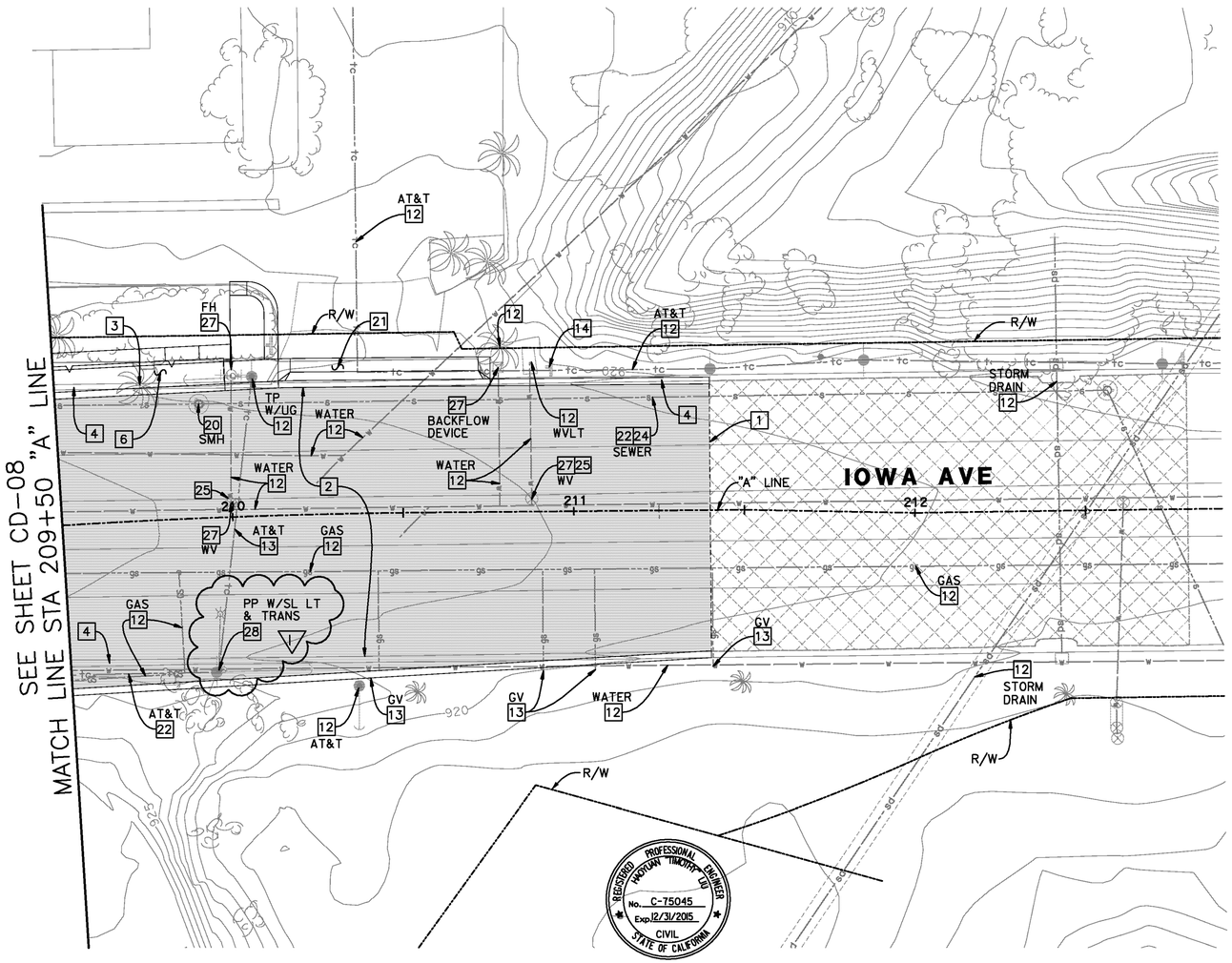

REGISTERED PROFESSIONAL ENGINEER MOHAN TIMOTHY LIU No. C-75045 Exp. 12/31/2015 CIVIL STATE OF CALIFORNIA

AS-BUILT
08/01/14

0 10 20 40 60 80
SCALE: 1" = 20'

Don't Dig...Until You Call U.S.A. Toll Free
1-800-227-2600
for the location of buried utility lines.
Don't disrupt vital services.
TWO WORKING DAYS BEFORE YOU DIG

PLANS PREPARED BY:
AECOM
901 VIA PIEMONTE, 5TH FLOOR
ONTARIO, CA 91764
(909) 579-3050

REGISTERED PROFESSIONAL ENGINEER JAMES M. FAIRBANK No. C-45668 Exp. 12-12 CIVIL STATE OF CALIFORNIA

MARK	REVISIONS	APPR	DATE
7	ADDENDUM NO.3		5/9/12
	ADDED NOTE 28 TO DEMOLITION NOTES		
	MODIFIED PP W/SL LT & TRANS NOTE TO 28		
AS-BUILT	ADDED TOTAL SHEET COUNT		8/1/14

DESIGN BY MO DRAWN BY MO CHECKED BY BMS

IOWA AVENUE
GRADE SEPARATION
CONSTRUCTION DEMOLITION

DWG NO. R-4237
CD-09
SHEET 41 OF 133
SCALE: AS SHOWN

AS-BUILTS

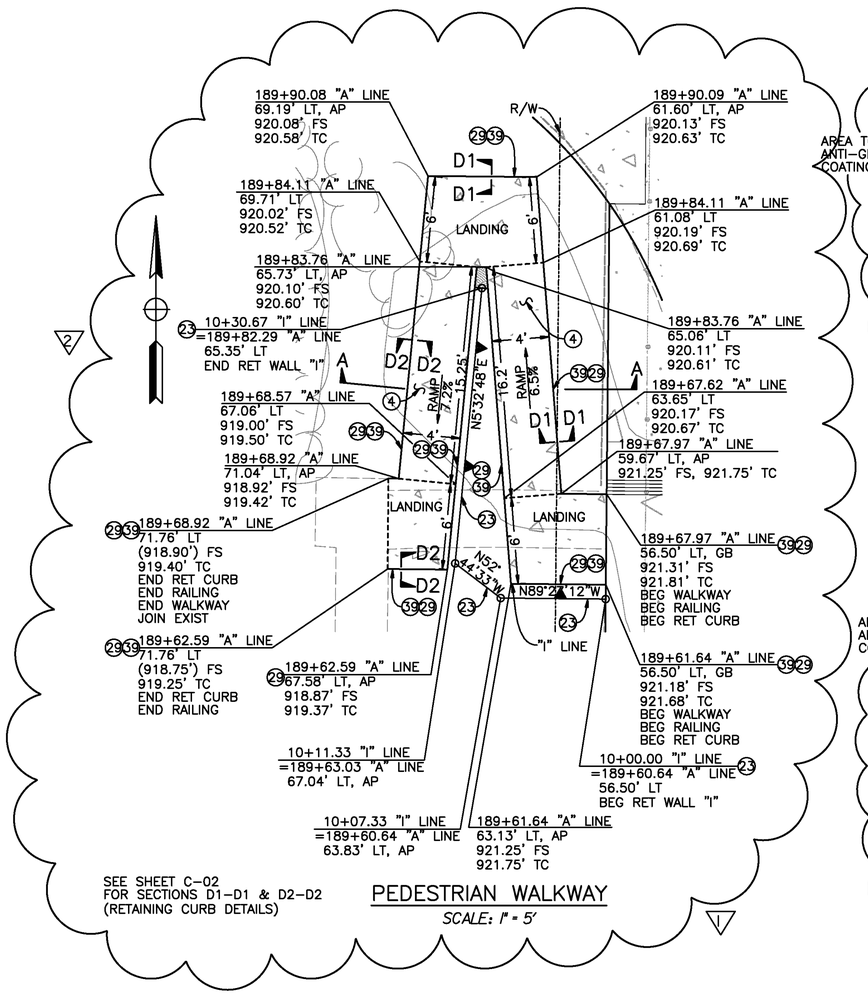

PEDESTRIAN WALKWAY

SCALE: 1" = 5'

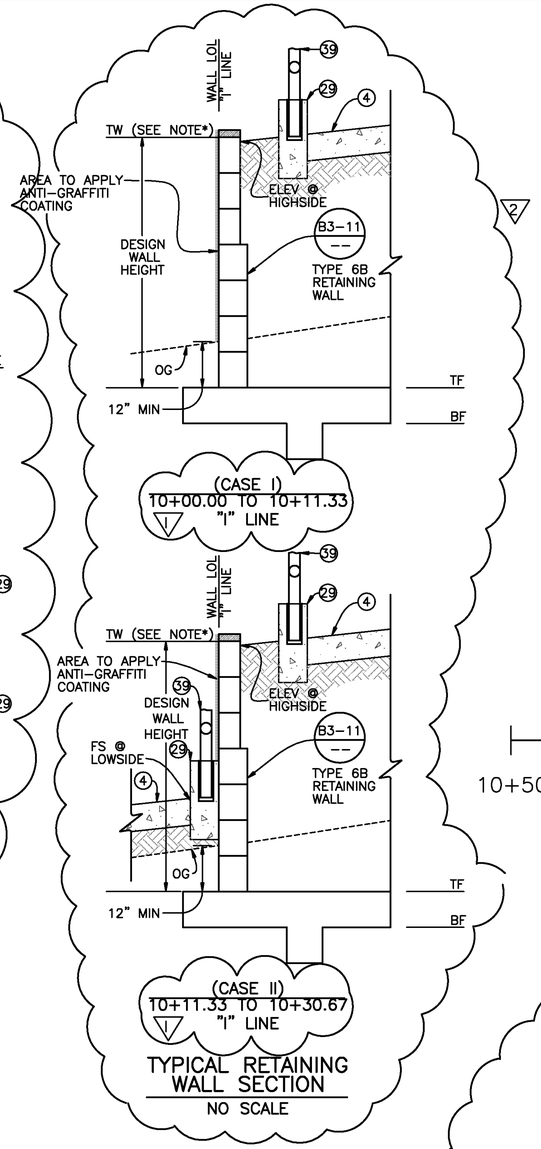

TYPICAL RETAINING WALL SECTION

NO SCALE

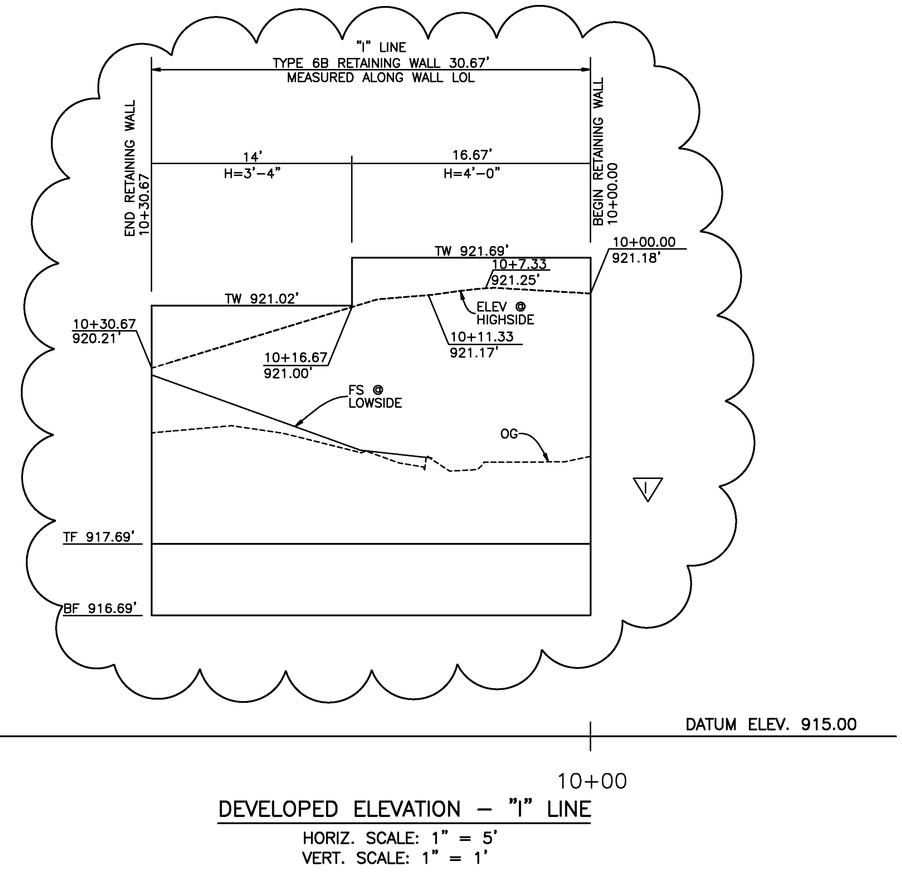

DEVELOPED ELEVATION – "I" LINE

HORIZ. SCALE: 1" = 5'
VERT. SCALE: 1" = 1'

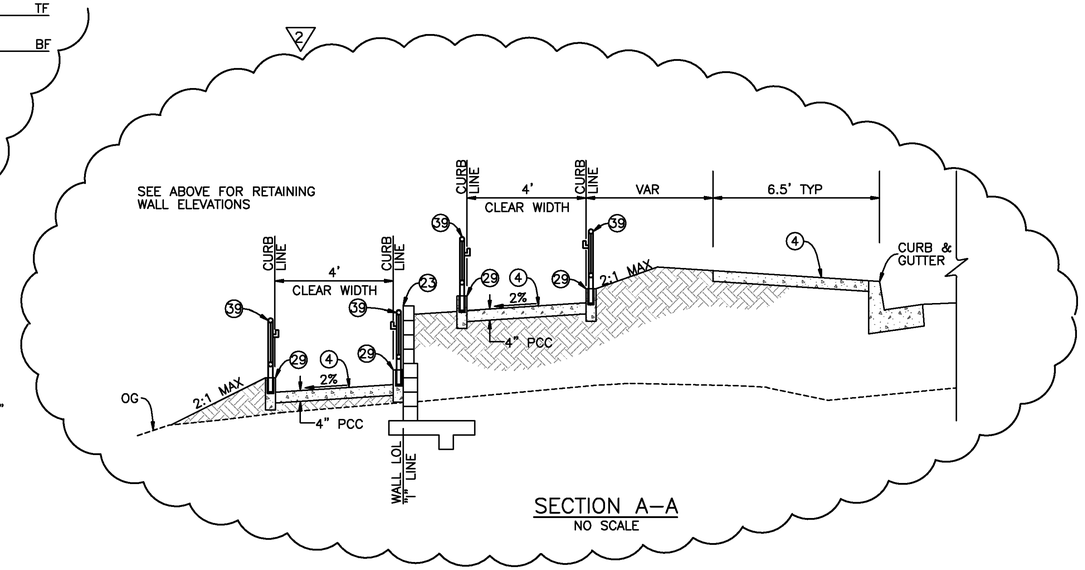

SECTION A–A

NO SCALE

NOTE*:

DESIGN WALL HEIGHT IS MEASURED FROM TOP OF FOOTING TO UPPER EDGE OF THE HIGHEST MASONRY BLOCK.

DESIGN WALL HEIGHT SHALL SATISFY:

- TW SHALL BE HIGHER THAN THE FINISHED ELEVATION @ BACK SIDE OF THE WALL (i.e. "ELEV @ HIGHSIDE" IN SECTION VIEW ABOVE).
- WALL HEIGHT SHALL BE A NUMERICAL VALUE THAT IS AN EXACT MULTIPLE OF 8" (BETWEEN 3'-4" AND 6'-0").
- FOR ALL DETAILS NOT SHOWN SEE 2006 CALTRANS STD PLAN B3-11.

CONSTRUCTION NOTES:

4. CONSTRUCT SIDEWALK, WIDTH PER PLAN, PER THE CITY'S STD NO. 325.
23. CONSTRUCT TYPE 6B RETAINING WALL PER DETAILS ON SHEETS C-01 TO C-03.
27. ~~INSTALL MODIFIED METAL HANDRAILING PER SFPWG STD 606.3 & PER THE ADDITIONAL DETAILS HEREON.~~
29. INSTALL RETAINING CURB PER DETAIL ON SHEET C-02.
39. INSTALL MODIFIED METAL HANDRAILING PER ATTACHED DETAIL DRAWING & PER THE ADDITIONAL DETAILS HEREON.

LEGEND:

- PCC SIDEWALK
- 2:1 MAX GRADING
- ------- GRADE BREAK
- STANDARD PLAN SHEET NO.
- DETAIL NO.

REGISTERED PROFESSIONAL ENGINEER HAOYUAN "TIMOTHY" LIU No. C-75045 Exp. 12/31/2015 CIVIL STATE OF CALIFORNIA

AS-BUILT
08/01/14

Don't Dig...Until You Call U.S.A. Toll Free
1-800-227-2600
for the location of buried utility lines.
Don't disrupt vital services.
TWO WORKING DAYS BEFORE YOU DIG

PLANS PREPARED BY:
AECOM
901 VIA PIEMONTE, 5TH FLOOR
ONTARIO, CA 91764
(909) 579-3050

REGISTERED PROFESSIONAL ENGINEER JAMES M FARRAR No. C-56662 Exp. 12-31 CIVIL STATE OF CALIFORNIA

MARK	REVISIONS	APPR	DATE
AS-BUILT	ADDED TOTAL SHEET COUNT		8/1/14
7	MODIFY RAMP LANDING AREA WIDTH FROM 5' TO 6'.		5/17/12
6	CHANGE TO MODIFIED HAND RAIL ALONG WALKWAY;		6/11/13
	ALL WALKWAY TO BE INSTALLED WITH WARNING CURB		
	ON BOTH SIDES PER ADA REQUIREMENTS;		
	SLIGHTLY CHANGE SIDEWALK HORIZONTAL LOCATION		
	TO ACCOMMODATE WARNING CURB.		

DESIGN BY TL DRAWN BY TL CHECKED BY BMS

IOWA AVENUE
GRADE SEPARATION

CONSTRUCTION DETAILS
APN 247-140-035

DWG NO. R-4237
C-01
SHEET 42 OF 133
SCALE: AS SHOWN

AS-BUILTS

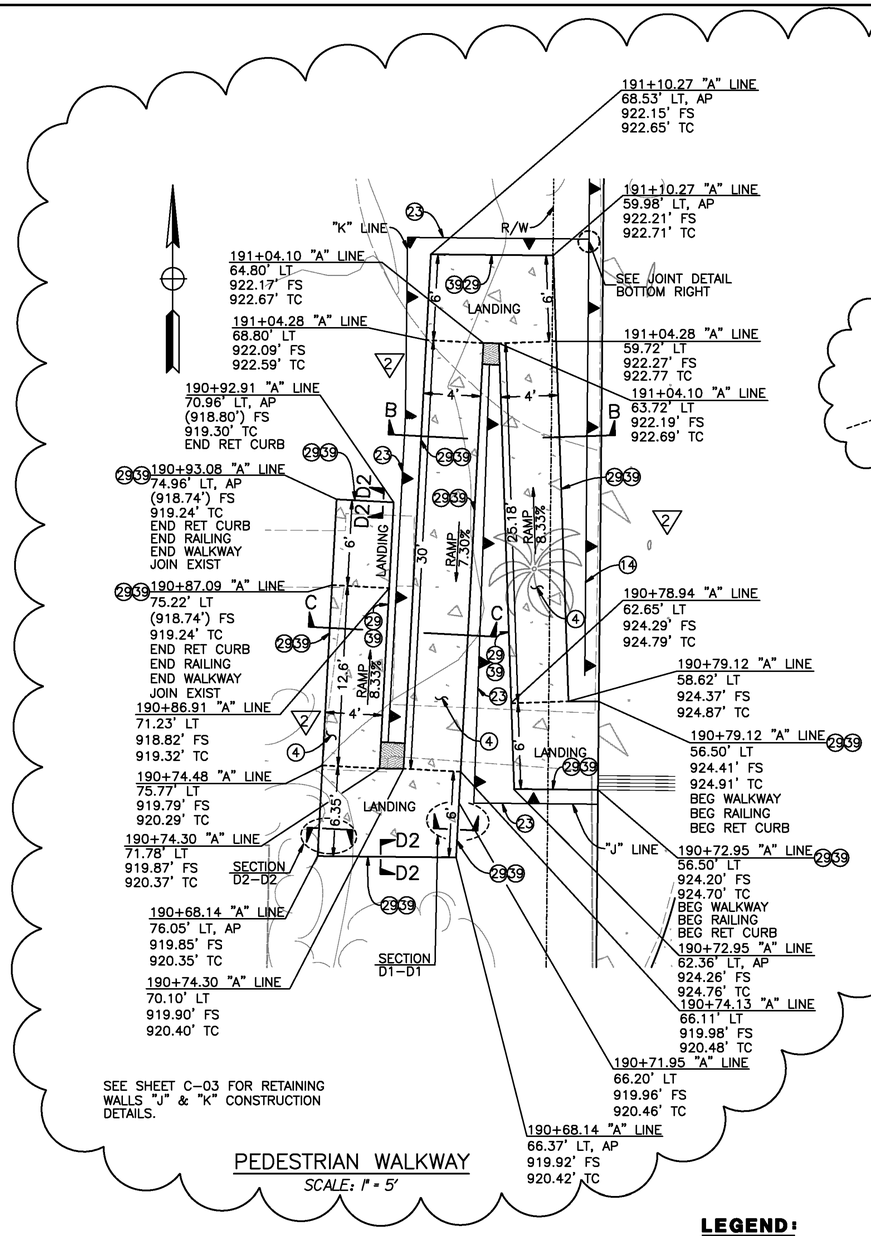

SEE SHEET C-03 FOR RETAINING WALLS "J" & "K" CONSTRUCTION DETAILS.

PEDESTRIAN WALKWAY
SCALE: 1" = 5'

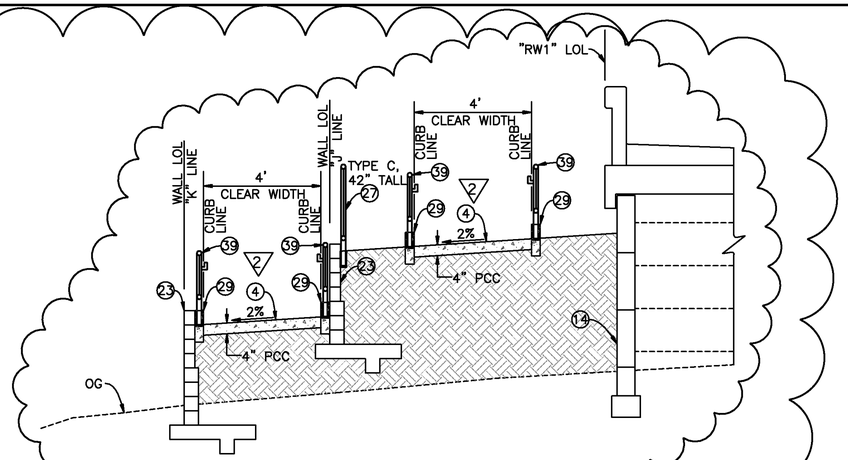

SECTION B-B
NO SCALE

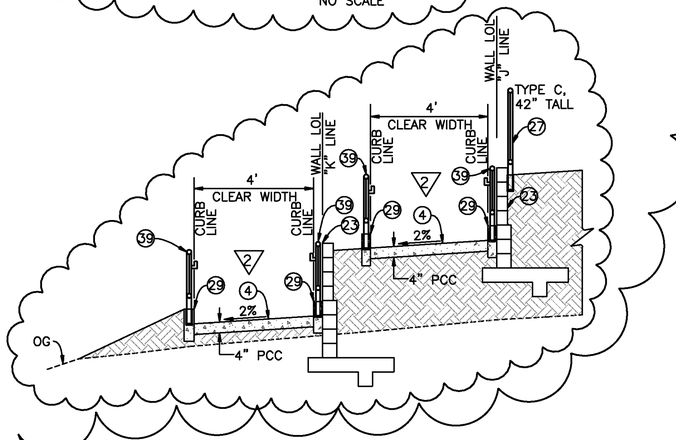

SECTION C-C
NO SCALE

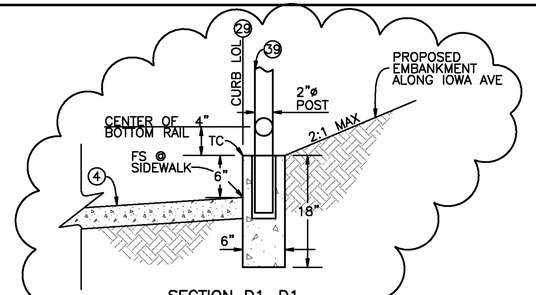

SECTION D1-D1
(CASE 1)
NO SCALE

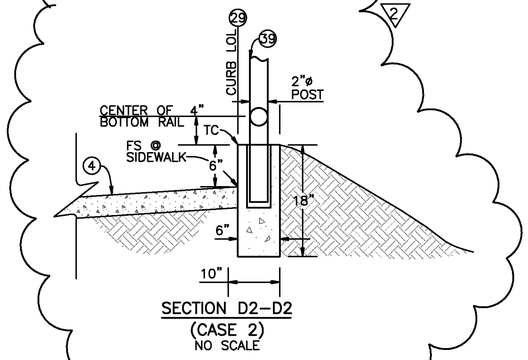

SECTION D2-D2
(CASE 2)
NO SCALE

RETAINING CURB
NO SCALE

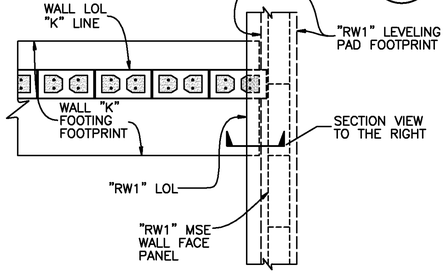

PLAN VIEW
NO SCALE

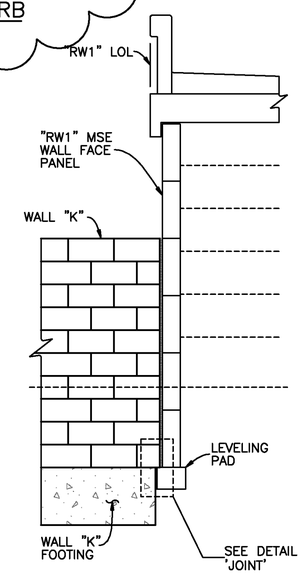

SECTION VIEW
NO SCALE

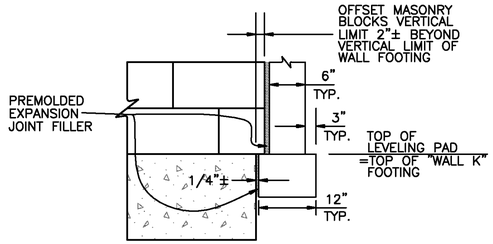

'JOINT'
NO SCALE

RETAINING WALL JOINT
NO SCALE

CONSTRUCTION NOTES:

(4) CONSTRUCT SIDEWALK, WIDTH PER PLAN, PER THE CITY'S STD NO. 325.

(14) CONSTRUCT MSE WALL, SEE STRUCTURAL PLANS.

(23) CONSTRUCT TYPE 6B RETAINING WALL PER DETAIL ON SHEET C-01 TO C-03.

(27) INSTALL METAL HANDRAILING PER SPPWC STD 606-3 AND PER THE ADDITIONAL DETAILS HEREON.

(29) INSTALL RETAINING CURB PER DETAIL HEREON.

(39) INSTALL MODIFIED METAL HANDRAILING PER ATTACHED DETAIL DRAWING & PER THE ADDITIONAL DETAILS HEREON. (2)

LEGEND:

PCC SIDEWALK OR CONCRETE CURB/FOOTING

2:1 MAX GRADING

------- GRADE BREAK

REGISTERED PROFESSIONAL ENGINEER MORLAN TIMOTHY LIU No. C-75045 Exp. 12/31/2015 CIVIL STATE OF CALIFORNIA

AS-BUILT
08/01/14

(2) CHANGE TO MODIFIED HAND RAIL ALONG WALKWAY; ALL WALKWAY TO BE INSTALLED WITH WARNING CURB ON BOTH SIDES PER ADA REQUIREMENTS; SLIGHTLY CHANGE SIDEWALK/RETAINING WALL "J" HORIZONTAL ALIGNMENT TO ACCMMODATE WARNING CURB.

Don't Dig...Until You Call U.S.A. Toll Free
1-800-227-2600
for the location of buried utility lines.
Don't disrupt vital services.
TWO WORKING DAYS BEFORE YOU DIG

PLANS PREPARED BY:
AECOM
901 VIA PIEMONTE, 5TH FLOOR
ONTARIO, CA 91764
(909) 579-3050

REGISTERED PROFESSIONAL ENGINEER JAMES M. FARRAR No. C 45662 Exp. 12-12 CIVIL STATE OF CALIFORNIA

MARK	REVISIONS	APPR	DATE
(2)	MODIFY RAMP LANDING AREA WIDTH FROM 5' TO 6'.		5/17/12
	ADD ADDITIONAL 42" TALL TYPE C RAILING.		
(2)	SEE ABOVE.		6/11/13
AS-BUILT	ADDED TOTAL SHEET COUNT		8/1/14

DESIGN BY TL DRAWN BY TL CHECKED BY BMS

IOWA AVENUE
GRADE SEPARATION
CONSTRUCTION DETAILS
APN 247-140-034

DWG NO. R-4237
C-02
SHEET 43 OF 133
SCALE: AS SHOWN

AS-BUILTS

2 CHANGE TO MODIFIED HAND RAIL ALONG WALKWAY; ALL WALKWAY TO BE INSTALLED WITH WARNING CURB ON BOTH SIDES PER ADA REQUIREMENTS; SLIGHTLY CHANGE SIDEWALK/RETAINING WALL "J" HORIZONTAL ALIGNMENT TO ACCMMODATE WARNING CURB.

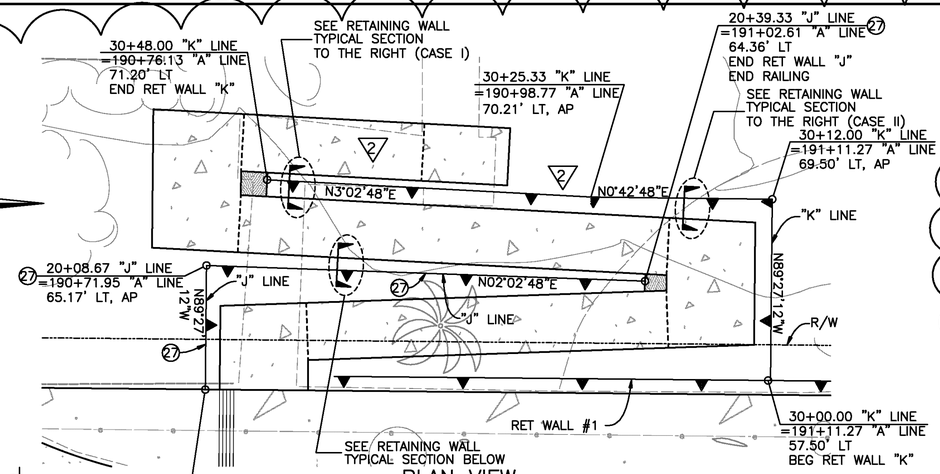

PLAN VIEW

SCALE: 1" = 5'

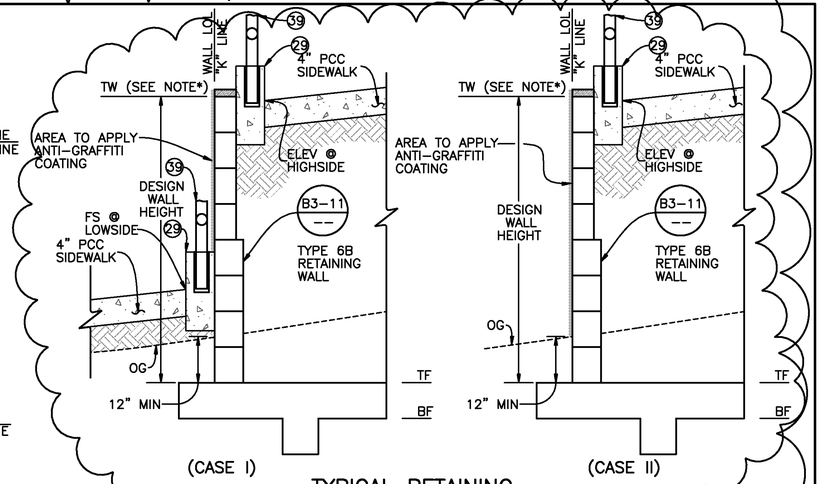

TYPICAL RETAINING WALL SECTION – "K" LINE

NO SCALE

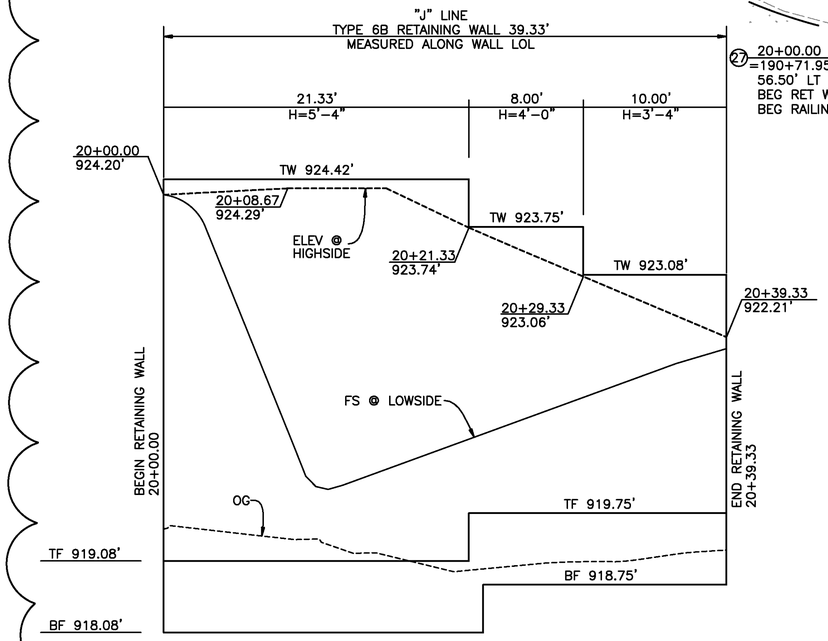

DEVELOPED ELEVATION – "J" LINE

HORIZ. SCALE: 1" = 5'
VERT. SCALE: 1" = 1'

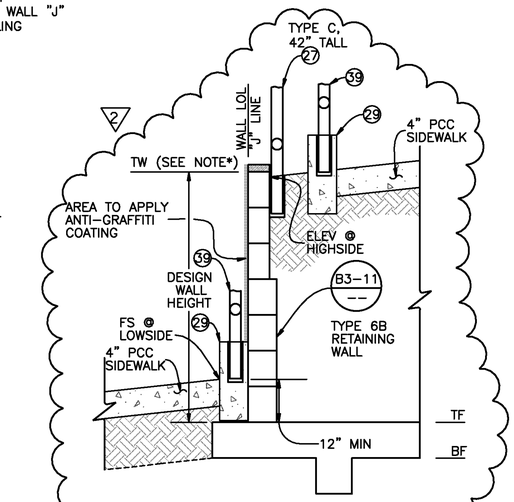

TYPICAL RETAINING WALL SECTION – "J" LINE

NO SCALE

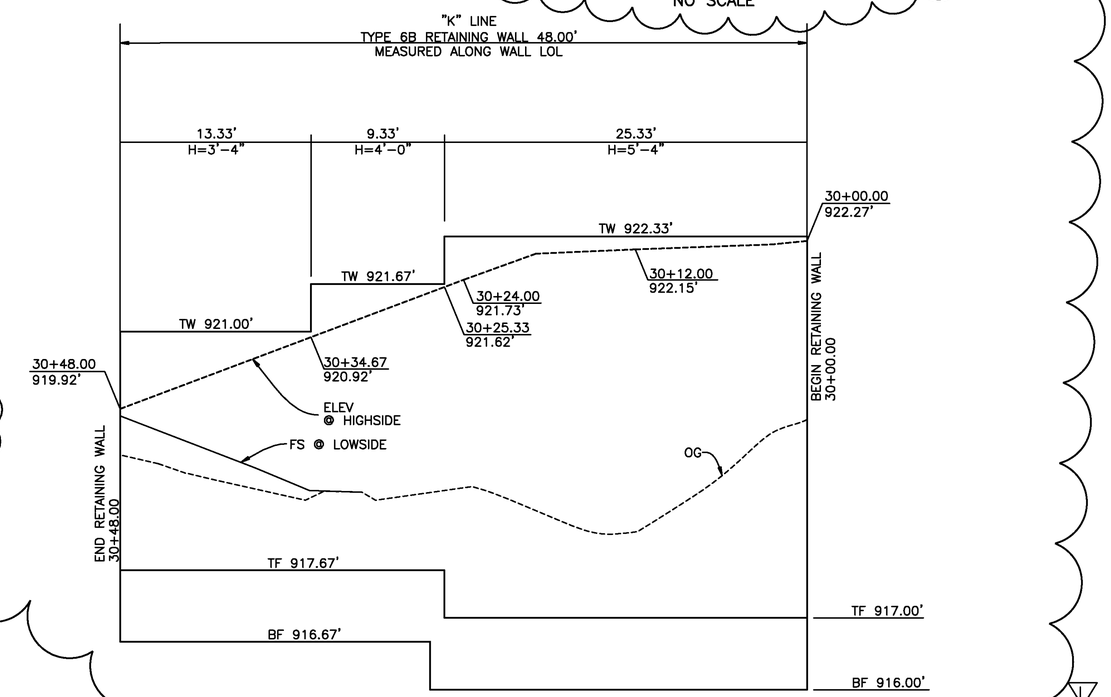

DEVELOPED ELEVATION – "K" LINE

HORIZ. SCALE: 1" = 5'
VERT. SCALE: 1" = 1'

NOTE*:

DESIGN WALL HEIGHT IS MEASURED FROM TOP OF FOOTING TO UPPER EDGE OF THE HIGHEST MASONRY BLOCK.

DESIGN WALL HEIGHT SHALL SATISFY:

- TW SHALL BE HIGHER THAN THE FINISHED ELEVATION @ BACK SIDE OF THE WALL (i.e. "ELEV @ HIGHSIDE" IN SECTION VIEW ABOVE).
- WALL HEIGHT SHALL BE A NUMERICAL VALUE THAT IS AN EXACT MULTIPLE OF 8" (BETWEEN 3'-4" AND 6'-0").
- FOR ALL DETAILS NOT SHOWN SEE 2006 CALTRANS STD PLAN B3-11.

REGISTERED PROFESSIONAL ENGINEER JONATHAN TIMOTHY LEE No. C-75045 Exp. 12/31/2015 CIVIL STATE OF CALIFORNIA

AS-BUILT 08/01/14

NO AS-BUILT CHANGES

LEGEND:

- PCC SIDEWALK
- 2:1 MAX GRADING
- GRADE BREAK
- STANDARD PLAN SHEET NO.
- DETAIL NO.

ROADWAY CONSTRUCTION NOTES:

27 INSTALL METAL HANDRAILING PER SPPWC STD 606-3 AND PER THE ADDITIONAL DETAILS HEREON.

29 INSTALL RETAINING CURB PER DETAIL ON SHEET C-02.

39 INSTALL MODIFIED METAL HANDRAILING PER ATTACHED DETAIL DRAWING & PER THE ADDITIONAL DETAILS HEREON.

Don't Dig...Until You Call U.S.A. Toll Free 1-800-227-2600 for the location of buried utility lines. Don't disrupt vital services.

TWO WORKING DAYS BEFORE YOU DIG

PLANS PREPARED BY:

AECOM

901 VIA PIEMONTE, 5TH FLOOR
ONTARIO, CA 91764
(909) 579-3050

REGISTERED PROFESSIONAL ENGINEER JAMES M. FARRELL No. C 65662 Exp. 12-12 CIVIL STATE OF CALIFORNIA

MARK	REVISIONS	APPR	DATE
2	MODIFY RAMP LANDING AREA WIDTH FROM 5' TO 6'.		5/17/12
	ADD ADDITIONAL 42" TALL TYPE C RAILING.		
2	SEE TOP LEFT		6/11/13
AS-BUILT	ADDED TOTAL SHEET COUNT		8/1/14

DESIGN BY TL DRAWN BY TL CHECKED BY BMS

IOWA AVENUE GRADE SEPARATION

CONSTRUCTION DETAILS RETAINING WALLS "J" & "K"

DWG NO. R-4237

C-03

SHEET 44 OF 133

SCALE: AS SHOWN

AS-BUILTS

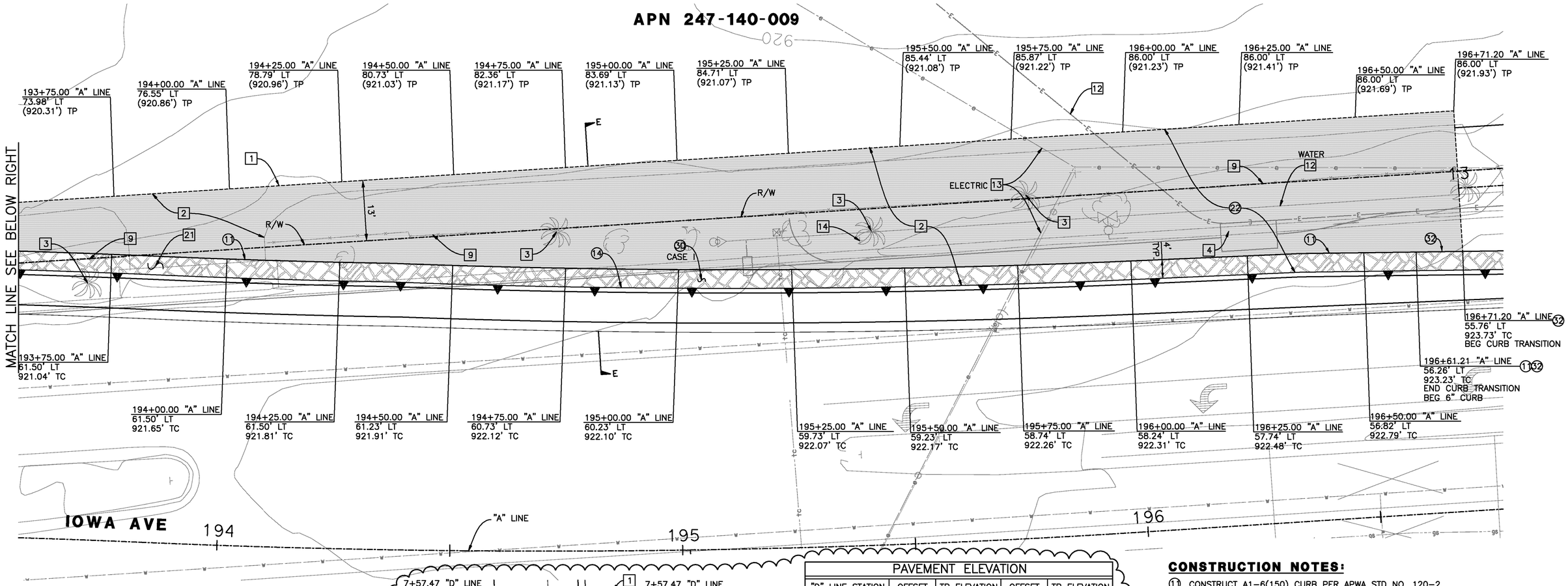

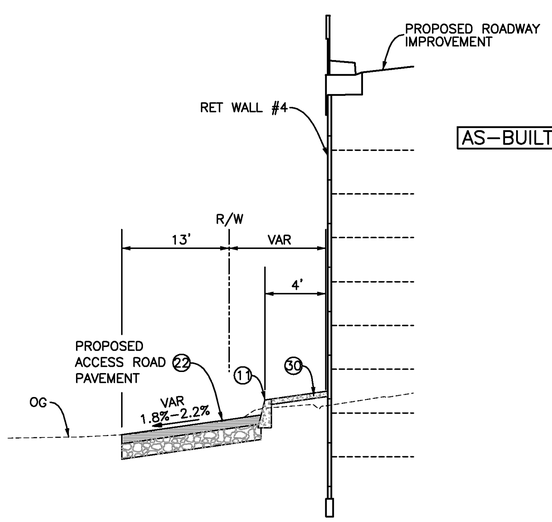

SECTION E-E
NO SCALE

PAVEMENT ELEVATION				
"D" LINE STATION	OFFSET	TP ELEVATION	OFFSET	TP ELEVATION
7+75.00	19.50' LT	916.13'	31.50' LT	(915.89')
8+00.00	19.50' LT	916.30'	31.50' LT	(916.06')
8+25.00	19.50' LT	916.94'	31.50' LT	(916.70')
8+50.00	19.50' LT	917.38'	31.50' LT	(917.14')
8+75.00	19.50' LT	917.43'	31.50' LT	(917.19')
9+00.00	19.50' LT	917.67'	31.50' LT	(917.43')

CONSTRUCTION NOTES:

11 CONSTRUCT A1-6(150) CURB PER APWA STD NO. 120-2.
13 CONSTRUCT TYPE I RETAINING WALL, SEE STRUCTURAL PLANS.
14 CONSTRUCT MSE WALL, SEE STRUCTURAL PLANS.
22 CONSTRUCT 3" ASPHALT CONCRETE OVER 7" CRUSHED AGGREGATE BASE.
30 CONSTRUCT HARDSCAPE, WIDTH PER PLAN, PER DETAIL 6 ON SHEET C-11.
32 CONSTRUCT CURB TRANSITION PER DETAIL 8 ON SHEET C-11.

DEMOLITION NOTES:

1 SAWCUT EXISTING PAVEMENT
2 REMOVE EXISTING PAVEMENT
3 REMOVE TREES & ROOTS
4 REMOVE EXISTING CURB & GUTTER
9 REMOVE EXISTING FENCE
12 PROTECT IN PLACE
13 RELOCATE BY OTHERS
14 REMOVE SIGN AND/OR POST
21 REMOVE EXISTING DRIVEWAY

LEGEND:

NEW ASPHALT CONCRETE
HARDSCAPE

REGISTERED PROFESSIONAL ENGINEER HAGHJAW TIMOTHY CHU No. C-75045 Exp. 12/31/2015 CIVIL STATE OF CALIFORNIA

AS-BUILT
08/01/14

Don't Dig...Until You Call U.S.A. Toll Free
1-800-227-2600
for the location of buried utility lines.
Don't disrupt vital services.
TWO WORKING DAYS BEFORE YOU DIG

PLANS PREPARED BY:
AECOM
901 VIA PIEMONTE, 5TH FLOOR
ONTARIO, CA 91764
(909) 579-3050

REGISTERED PROFESSIONAL ENGINEER JAMES M FARRAR No. C-55662 Exp. 12-31-15 CIVIL STATE OF CALIFORNIA

MARK	REVISIONS	APPR	DATE
AS-BUILT	EXTEND OFFSITE PAVEMENT AREA		8/1/14
	ADDED TOTAL SHEET COUNT		

DESIGN BY TL DRAWN BY TL CHECKED BY BMS

IOWA AVENUE
GRADE SEPARATION
CONSTRUCTION DETAILS
APN 240-140-009

DWG NO. R-4237
C-04
SHEET 45 OF 133
SCALE: AS SHOWN

AS-BUILTS

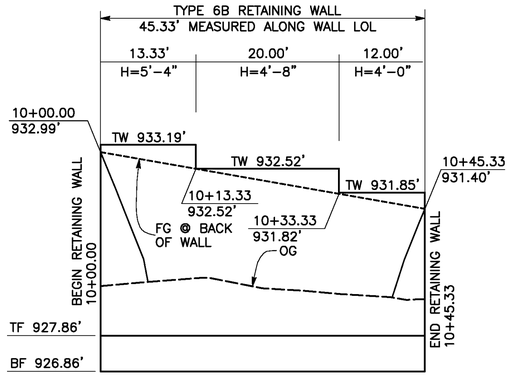

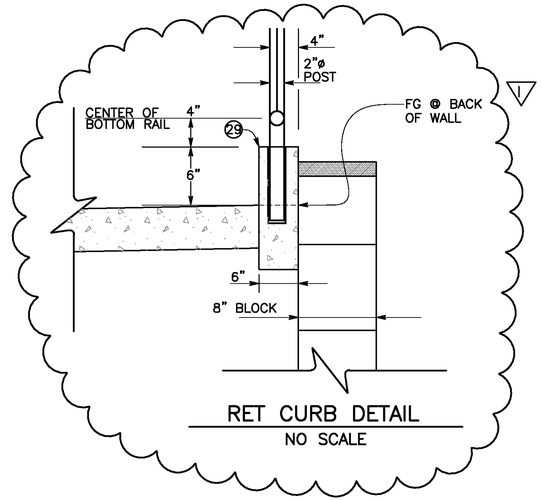

LEGEND:

STANDARD PLAN SHEET NO.

DETAIL NO.

ABBREVIATIONS:

AP	ANGLE POINT
FS	FINISHED SURFACE
PVI	POINT OF VERTICAL INTERSECTION
TF	TOP OF FOOTING
BF	BOTTOM OF FOOTING
TW	TOP OF WALL
TCB	TOP OF CONCRETE BARRIER
VAR	VARIES

NOTE*:

DESIGN HEIGHT (H) IS MEASURED FROM TOP OF FOOTING TO UPPER EDGE OF THE HIGHEST MASONRY BLOCK.

DESIGN HEIGHT (H) SHALL SATISFY:

– TW SHALL BE HIGHER THAN THE FINISHED ELEVATION @ BACK SIDE OF THE WALL (i.e. "FG @ BACK OF WALL" IN SECTION VIEW BELOW).

– WALL HEIGHT (H) SHALL BE A NUMERICAL VALUE THAT IS AN EXACT MULTIPLE OF 8" (BETWEEN 3'-4" AND 6'-0").

– FOR ALL DETAILS NOT SHOWN SEE 2006 CALTRANS STD PLAN B3-11.

CONSTRUCTION NOTES:

27 INSTALL METAL HANDRAILING PER SPPWC STD 606-3 AND PER THE ADDITIONAL DETAILS HEREON.

29 INSTALL RETAINING CURB PER DETAIL ON SHEET C-02.

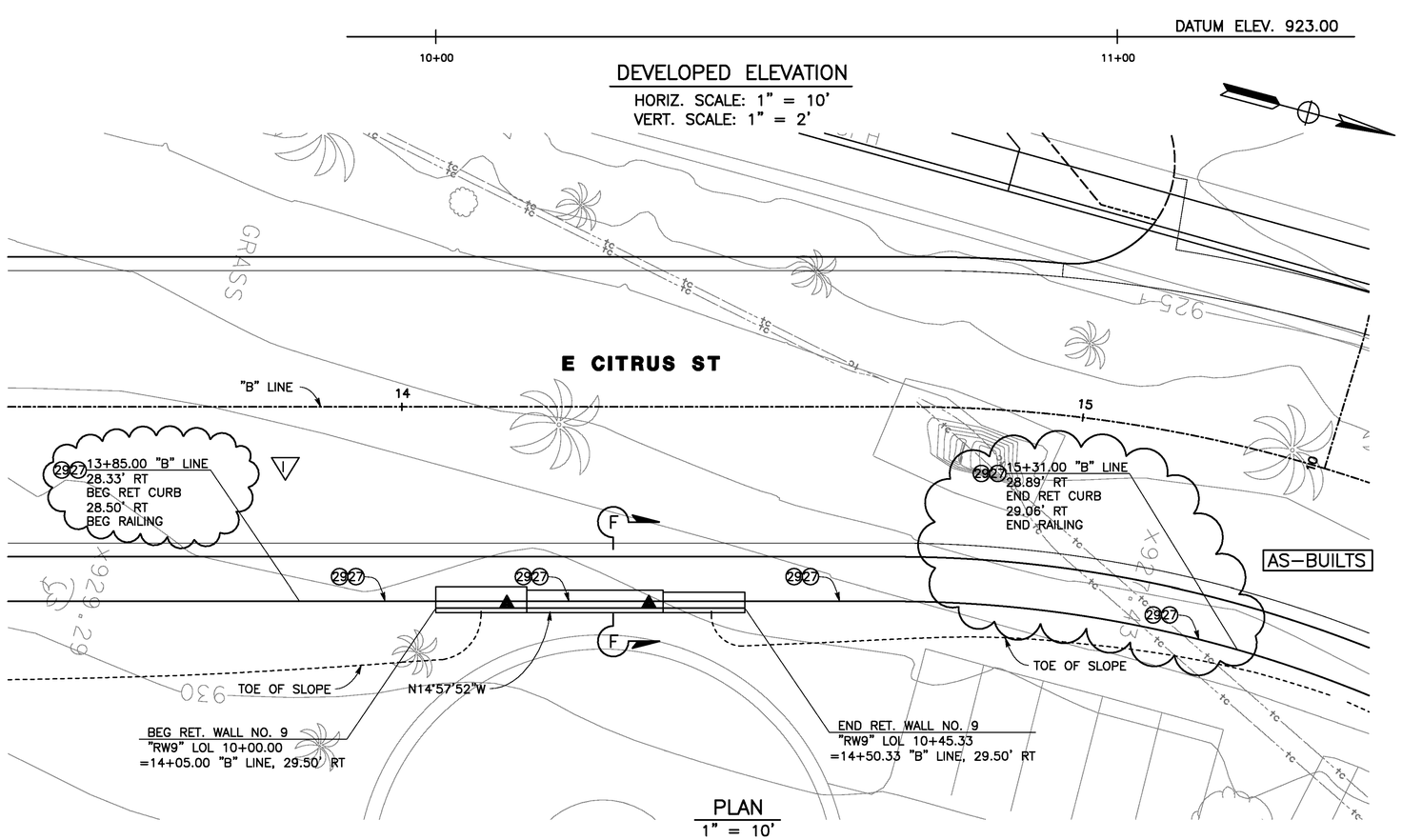

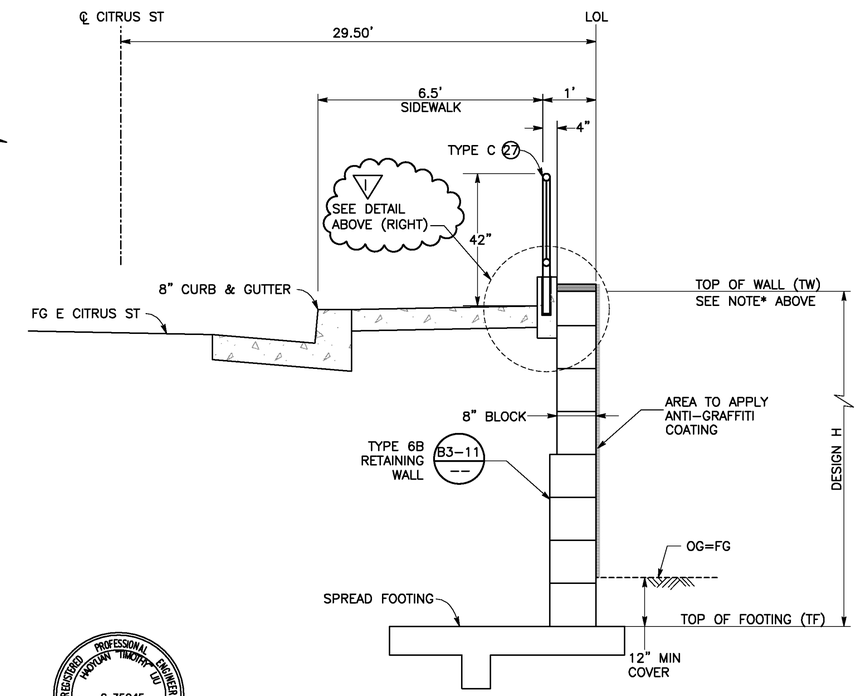

REGISTERED PROFESSIONAL ENGINEER HAROUT TIMOKIAN No. C-75045 Exp. 12/31/2015 CIVIL STATE OF CALIFORNIA

AS-BUILT 08/01/14

SECTION F-F
RETAINING WALL NO. 9
NO SCALE

Don't Dig...Until You Call U.S.A. Toll Free 1-800-227-2600 for the location of buried utility lines. Don't disrupt vital services.
TWO WORKING DAYS BEFORE YOU DIG

PLANS PREPARED BY:
AECOM
901 VIA PIEMONTE, 5TH FLOOR
ONTARIO, CA 91764
(909) 579-3050

REGISTERED PROFESSIONAL ENGINEER JAMES M. FARRIER No. C-55662 Exp. 12-12 CIVIL STATE OF CALIFORNIA

MARK	REVISIONS	APPR	DATE
	ADD RETAINING (WARNING) CURB ALONG THE ENTIRE		6/11/13
	DURATION OF TYPE C HAND RAIL		
AS-BUILT	EXTEND METAL HAND RAILING		8/1/14
	AND RETAINING CURB LIMITS		
	ADDED TOTAL SHEET COUNT		

DESIGN BY TL DRAWN BY TL CHECKED BY BMS

IOWA AVENUE
GRADE SEPARATION
CONSTRUCTION DETAILS RETAINING WALL NO. 9

DWG NO. R-4237
C-05
SHEET 46 OF 133
SCALE: AS SHOWN

AS-BUILTS

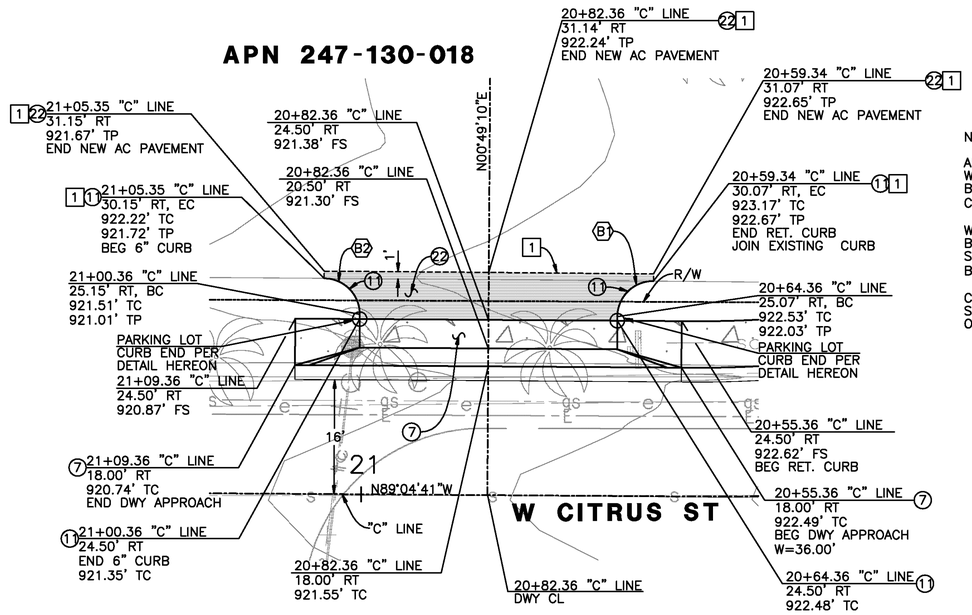

NOTE:

ALL CURB ELEVATIONS ON THIS SHEET WITHIN THE PRIVATE PARKING LOT ARE BASED ON THAT THE HEIGHT OF THE CURB IS 6".

WHEREVER THE CURB IS APPROACHING THE BACK OF FINISHED DRIVEWAY, CURB ELEVATION SHALL BE ADJUSTED PER THE DETAIL SHOWN BELOW ("PARKING LOT CURB END").

CONTRACTOR SHALL VERIFY ALL ELEVATIONS SHOWN BEFORE DOING ANY CONSTRUCTION ONTO THE PRIVATE PROPERTIES.

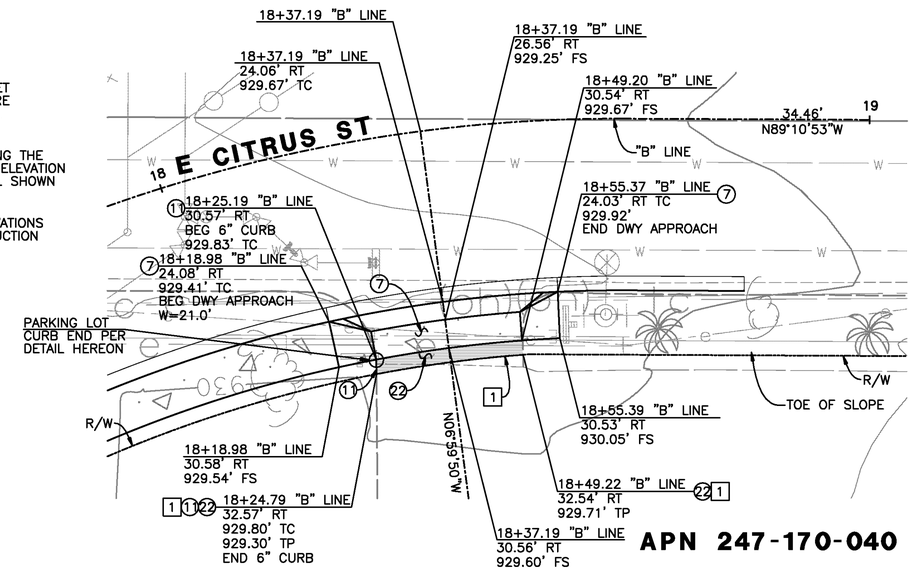

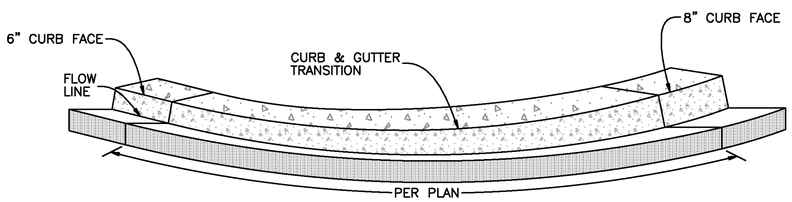

DETAIL 1
CURB & GUTTER TRANSITION
NO SCALE

CONSTRUCTION NOTES:

(7) CONSTRUCT DRIVEWAY APPROACH PER THE CITY'S STD NO. 302.

(11) CONSTRUCT A1-6(150) CURB PER APWA STD NO. 120-2.

(22) CONSTRUCT 3" ASPHALT CONCRETE OVER 7" CRUSHED AGGREGATE BASE.

DEMOLITION NOTES:

[1] SAWCUT EXISTING PAVEMENT

LEGEND:

NEW ASPHALT CONCRETE

PCC SIDEWALK OR CONCRETE CURB/CULVERT

0 5 10 20 30 40
SCALE: 1" = 10'

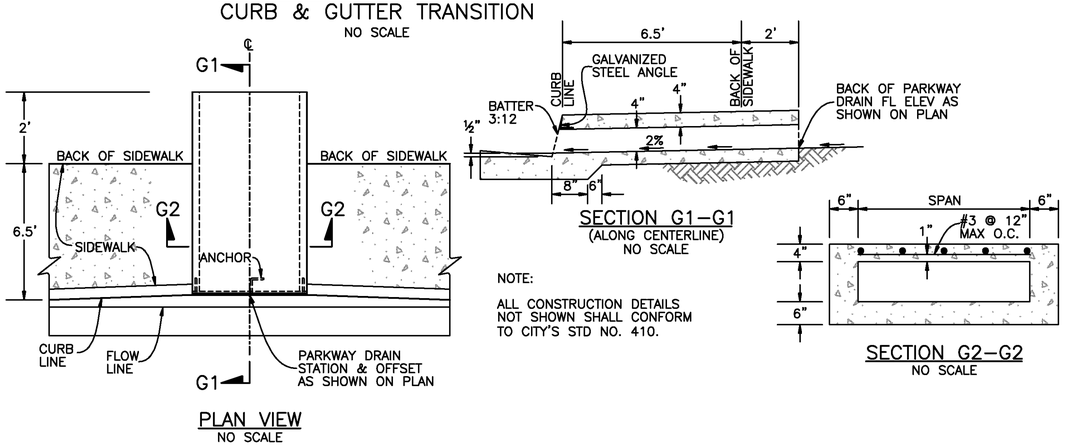

NOTE:

ALL CONSTRUCTION DETAILS NOT SHOWN SHALL CONFORM TO CITY'S STD NO. 410.

DETAIL 2
PARKWAY DRAIN
NO SCALE

CURVE DATA				
	DELTA	RADIUS	LENGTH	TANGENT
B1	00°09'28"	5.00'	7.87'	105.10'
B2	00°02'16"	5.00'	7.85'	93.60'

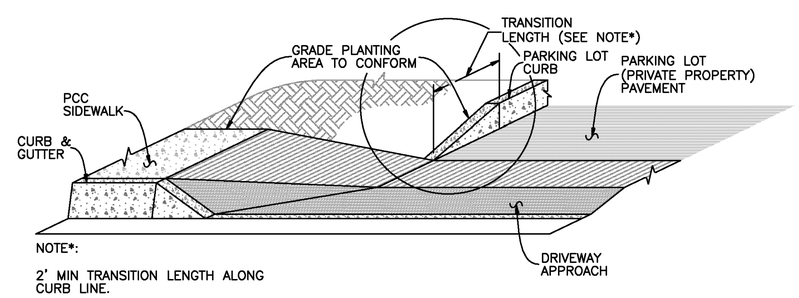

NOTE*:

2' MIN TRANSITION LENGTH ALONG CURB LINE.

PARKING LOT CURB END
(ISOMETRIC VIEW)
NO SCALE

REGISTERED PROFESSIONAL ENGINEER HAOYUAN "TIMOTHY" CHU No. C-75045 Exp. 12/31/2015 CIVIL STATE OF CALIFORNIA

AS-BUILT
08/01/14

Don't Dig...Until You Call U.S.A. Toll Free
1-800-227-2600
for the location of buried utility lines.
Don't disrupt vital services.
TWO WORKING DAYS BEFORE YOU DIG

PLANS PREPARED BY:
AECOM
901 VIA PIEMONTE, 5TH FLOOR
ONTARIO, CA 91764
(909) 579-3050

REGISTERED PROFESSIONAL ENGINEER JAMES M FARRAR No. C-55560 Exp. 12-2 CIVIL STATE OF CALIFORNIA

MARK	REVISIONS	APPR	DATE
AS-BUILT	ADDED TOTAL SHEET COUNT		8/1/14

DESIGN BY TL DRAWN BY TL CHECKED BY BMS

IOWA AVENUE
GRADE SEPARATION

CONSTRUCTION DETAILS
APNs 247-130-018 & 247-170-040
MISC DETAILS

DWG NO. R-4237
C-06
SHEET 47 OF 133
SCALE: AS SHOWN

AS-BUILTS

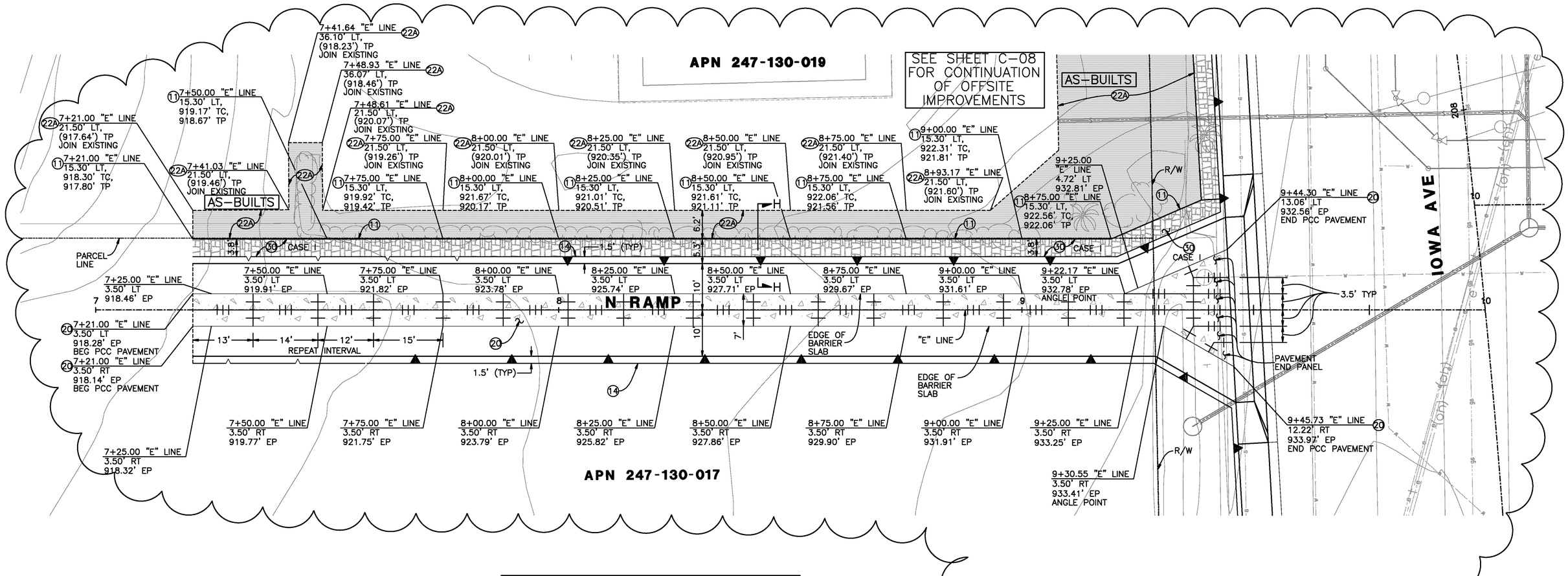

CONSTRUCTION NOTES:

(11) CONSTRUCT A1-6 CURB PER SPPWC STD NO. 120-2.

(14) CONSTRUCT MSE WALL, SEE STRUCTURAL PLANS.

(20) CONSTRUCT ~~3"~~ 6" PCC PAVEMENT OVER ~~7"~~ 4" CLASS II AGGREGATE BASE.

(22A) CONSTRUCT ~~3"~~ 6" ASPHALT CONCRETE OVER ~~7"~~ 4" CRUSHED AGGREGATE BASE.

(30) CONSTRUCT HARDSCAPE, WIDTH PER PLAN, PER DETAIL 6 ON SHEET C-11.

2 AS-BUILTS

LEGEND:

PCC PAVEMENT

AC PAVEMENT

HARDSCAPE

PCC RAMP LEGENDS:

LONGITUDINAL JOINT WITH TIE BARS

TRANSVERSE JOINT WITH DOWEL BARS

PCC RAMP CONSTRUCTION NOTES:

1. DIMENSION OF STRUCTURAL SECTIONS ARE SUBJECT TO TOLERANCES SPECIFIED IN STANDARD SPECIFICATIONS.
2. FOR LONGITUDINAL AND TRAVERSE JOINTS, DOWELS AND TIE BAR DETAILS, SEE 2006 CALTRANS STD PLANS P1, P10, P18, P20, P30 AND PER DETAIL HEREON.
3. PAVEMENT END PANEL PER 2006 CALTRANS STD PLAN P30.

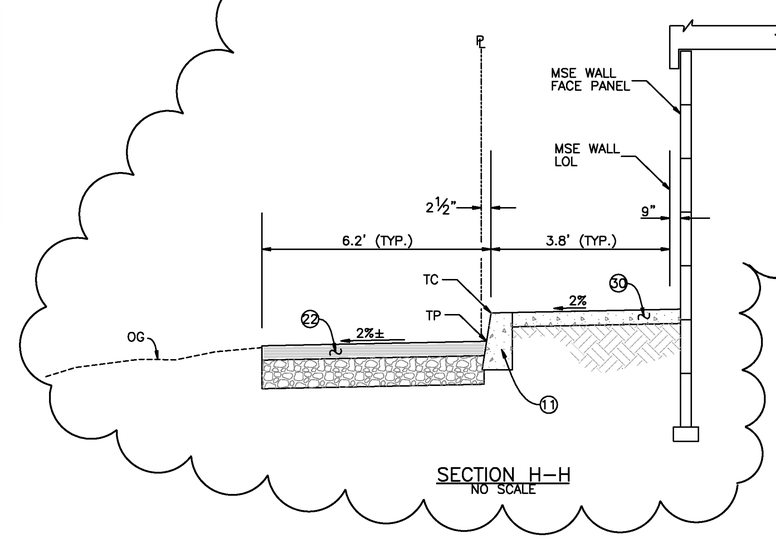

SECTION H-H
NO SCALE

1

REGISTERED PROFESSIONAL ENGINEER MOHAN TIMOTHY LIU No. C-75045 Exp. 12/31/2015 CIVIL STATE OF CALIFORNIA

AS-BUILT
08/01/14

0 5 10 20 30 40
SCALE: 1" = 10'

Don't Dig...Until You Call U.S.A. Toll Free
1-800-227-2600
for the location of buried utility lines.
Don't disrupt vital services.
TWO WORKING DAYS BEFORE YOU DIG

PLANS PREPARED BY:
AECOM
901 VIA PIEMONTE, 5TH FLOOR
ONTARIO, CA 91764
(909) 579-3050

REGISTERED PROFESSIONAL ENGINEER JAMES M FARRAR No. C 55593 Exp. 12-2 CIVIL STATE OF CALIFORNIA

MARK	REVISIONS	APPR	DATE
2	CHANGED AC TO HARDSCAPE IN FRONT OF MSE WALL; ADDED CURB AT SOUTH EAST CORNER OF THE PROPERTY		11/1/12
1	CHANGED CONSTRUCTION NOTES 20 & 22		3/25/13
AS-BUILT	REVISED NOTE 22 TO 22A		8/1/14
	ADDED TOTAL SHEET COUNT		

DESIGN BY TL DRAWN BY TL CHECKED BY BMS

IOWA AVENUE GRADE SEPARATION

CONSTRUCTION DETAILS NORTH RAMP

DWG NO. R-4237
C-07
SHEET 48 OF 133
SCALE: AS SHOWN

AS-BUILTS

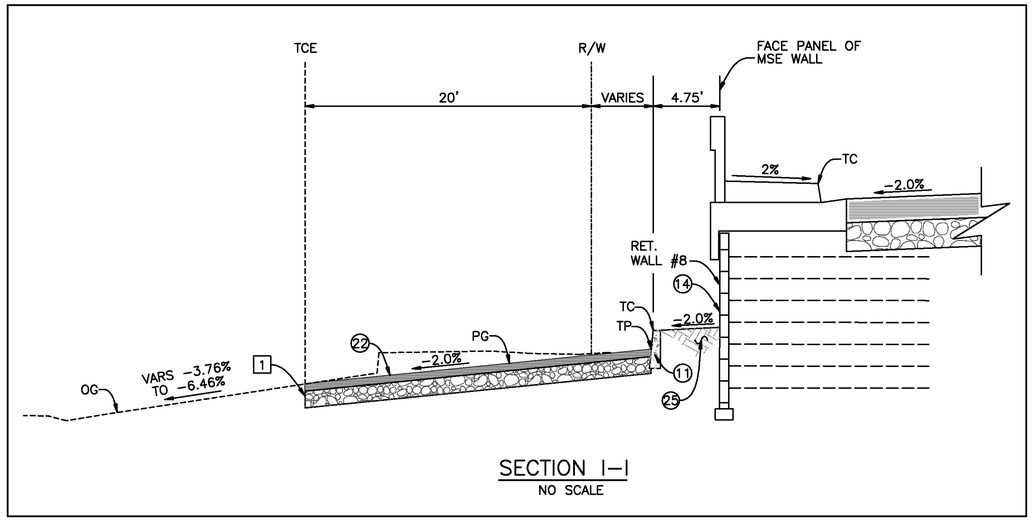

SECTION I–I
NO SCALE

CONSTRUCTION NOTES:

(11) CONSTRUCT A1–6 CURB PER APWA STD NO. 120–2.

(14) CONSTRUCT MSE WALL, SEE STRUCTURAL PLANS.

(22A) CONSTRUCT ~~3"~~ 6" ASPHALT CONCRETE OVER ~~7"~~ 4" CRUSHED AGGREGATE BASE. AS–BUILTS

(25) INSTALL LANDSCAPE AND IRRIGATION IMPROVEMENTS PER LANDSCAPE AND IRRIGATION PLANS.

(30) CONSTRUCT HARDSCAPE, WIDTH PER PLAN, PER DETAIL 6 ON SHEET C–11.

DEMOLITION NOTES:

1 SAWCUT EXISTING PAVEMENT

2 REMOVE EXISTING PAVEMENT

3 REMOVE TREES & ROOTS

6 REMOVE EXISTING SIDEWALK

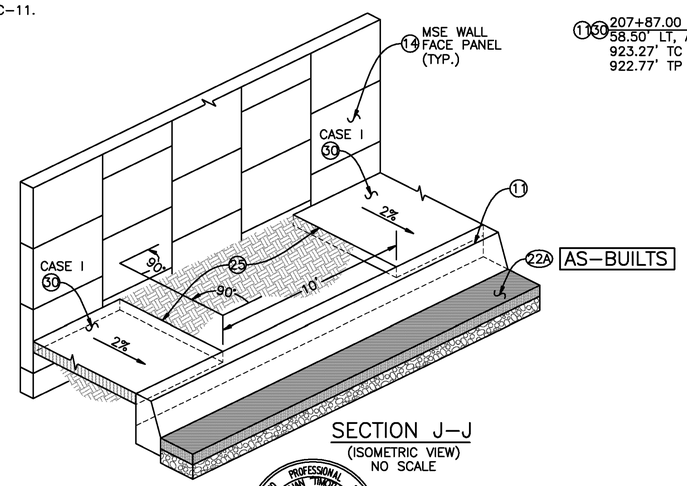

SECTION J–J
(ISOMETRIC VIEW)
NO SCALE

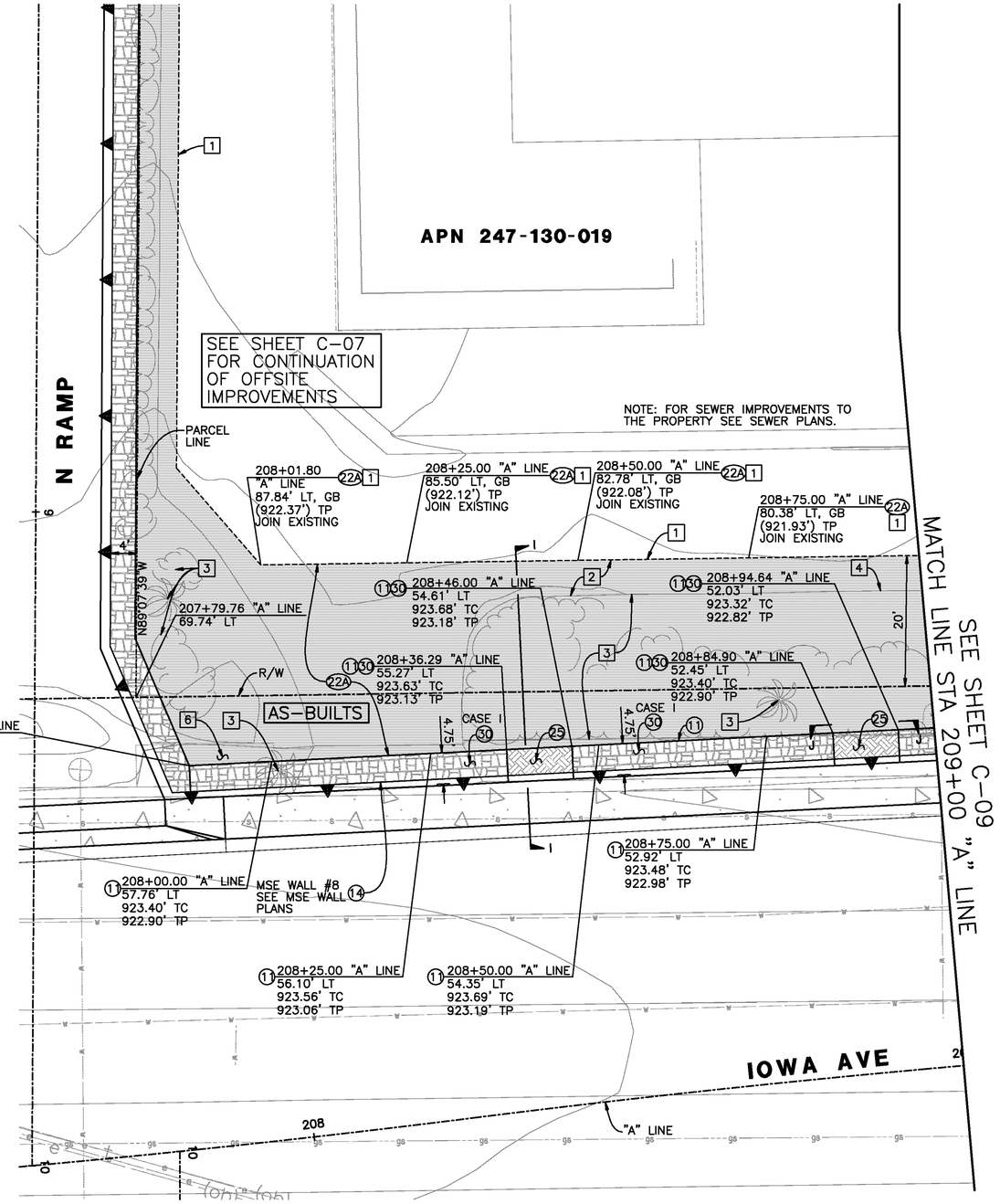

LEGEND:

NEW ASPHALT CONCRETE

HARDSCAPE

PROPOSED LANDSCAPED AREA

0 5 10 20 30 40
SCALE: 1" = 10'

REGISTERED PROFESSIONAL ENGINEER HAOYUAN "HAOYU" LIU No. C-75045 Exp. 12/31/2015 CIVIL STATE OF CALIFORNIA

AS-BUILT
08/01/14

Don't Dig...Until You Call U.S.A. Toll Free 1-800-227-2600 for the location of buried utility lines. Don't disrupt vital services.
TWO WORKING DAYS BEFORE YOU DIG

PLANS PREPARED BY:
AECOM
901 VIA PIEMONTE, 5TH FLOOR
ONTARIO, CA 91764
(909) 579-3050

REGISTERED PROFESSIONAL ENGINEER JAMES M. FARRIS No. C 45662 Exp. 12-12 CIVIL STATE OF CALIFORNIA

MARK	REVISIONS	APPR	DATE
	CHANGED CONSTRUCTION NOTE 22		3/25/13
AS-BUILT	REVISED NOTE 22 TO 22A		8/1/14
	ADDED TOTAL SHEET COUNT		

DESIGN BY TL DRAWN BY TL CHECKED BY BMS

IOWA AVENUE
GRADE SEPARATION
CONSTRUCTION DETAILS
APN 247-130-019

DWG NO. R–4237
C-08
SHEET 49 OF 133
SCALE: AS SHOWN

AS–BUILTS

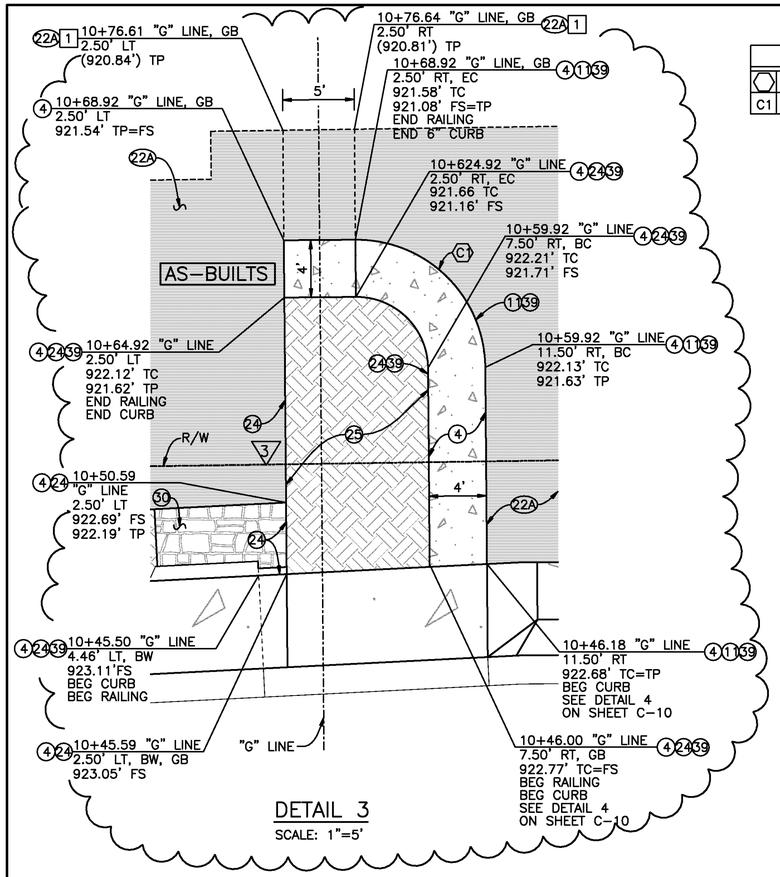

DETAIL 3
SCALE: 1"=5'

CURVE DATA				
	DELTA	RADIUS	LENGTH	TANGENT
C1	90°00'00"	9.00'	14.14'	9.00'

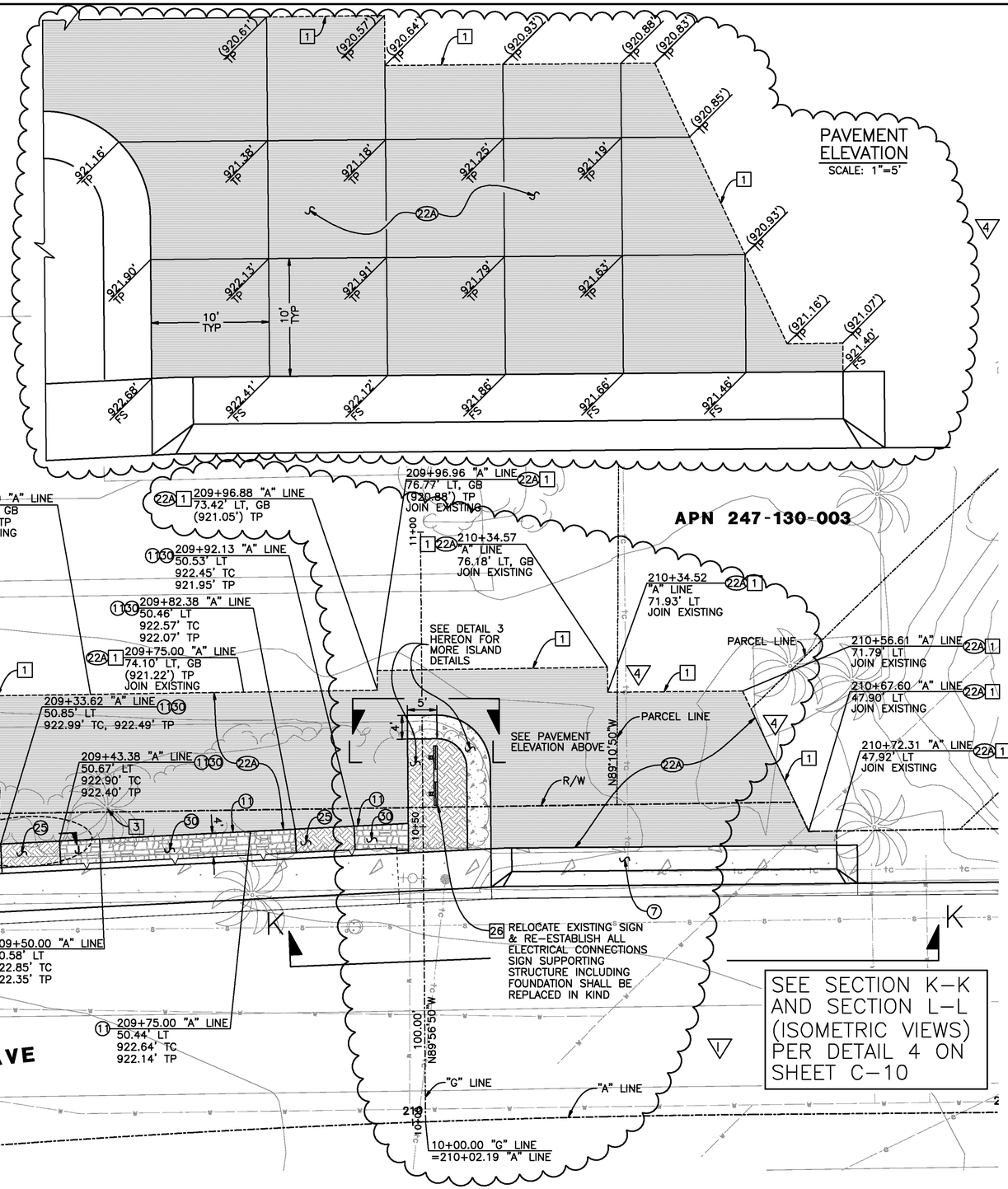

CONSTRUCTION NOTES:

(2) CONSTRUCT 8" TYPE I CURB & GUTTER PER THE CITY'S STD NO. 200.
(4) CONSTRUCT SIDEWALK, WIDTH PER PLAN, PER THE CITY'S STD NO. 325.
(7) CONSTRUCT DRIVEWAY APPROACH PER THE CITY'S STD NO. 302.
(11) CONSTRUCT A1-6(150) CURB PER APWA STD NO. 120-2.
(22A) CONSTRUCT ~~3"~~ 6" ASPHALT CONCRETE OVER ~~7"~~ 4" CRUSHED AGGREGATE BASE. 2
(24) INSTALL RETAINING CURB PER DETAIL 4 (SECTION VIEW) ON SHEET C-10. 3
(25) INSTALL LANDSCAPE AND IRRIGATION IMPROVEMENTS PER LANDSCAPE AND IRRIGATION PLANS.
~~(27) INSTALL METAL HANDRAILING PER SPPWC STD 606-3 AND PER THE ADDITIONAL DETAILS ON SHEET C-10.~~
(30) CONSTRUCT HARDSCAPE, WIDTH PER PLAN, PER DETAIL 6 ON SHEET C-11. 3
~~(31) CONSTRUCT WHEELCHAIR RAMP PER DETAIL 7 ON SHEET C-11.~~ 1
(39) INSTALL METAL MODIFIED METAL HANDRAILING PER ATTACHED DETAIL DRAWING & PER THE ADDITIONAL DETAILS HEREON. 3

DEMOLITION NOTES:

1 SAWCUT EXISTING PAVEMENT
2 REMOVE EXISTING PAVEMENT
3 REMOVE TREES & ROOTS
26 RELOCATE BUSINESS SIGN

LEGEND:

NEW ASPHALT CONCRETE
PCC SIDEWALK
PROPOSED LANDSCAPED AREA
HARDSCAPE

0 5 10 20 30 40
SCALE: 1" = 10'

REGISTERED PROFESSIONAL ENGINEER
MARVIN TIMONY LEE
No. C-75045
Exp. 12/31/2015
CIVIL
STATE OF CALIFORNIA

AS-BUILT
08/01/14

Don't Dig...Until You Call U.S.A. Toll Free
1-800-227-2600
for the location of buried utility lines.
Don't disrupt vital services.
TWO WORKING DAYS BEFORE YOU DIG

PLANS PREPARED BY:
AECOM
901 VIA PIEMONTE, 5TH FLOOR
ONTARIO, CA 91764
(909) 579-3050

REGISTERED PROFESSIONAL ENGINEER
JAMES M. FARRAW
No. C 65663
Exp. 12-2
CIVIL
STATE OF CALIFORNIA

MARK	REVISIONS	APPR	DATE
7	MODIFIED ADA RAMP CONFIGURATION		11/1/12
6	CHANGED CONSTRUCTION NOTE 22		3/25/13
5	CHANGE TO MODIFIED HAND RAIL		6/11/13
4	DRIVEWAY PAVEMENT ELEV ADJUSTEMENTS		8/24/13
AS-BUILT	REVISED PARKING LOT ISLAND IMPROVEMENTS		8/1/14
	ADDED TOTAL SHEET COUNT		

DESIGN BY TL DRAWN BY TL CHECKED BY BMS

IOWA AVENUE
GRADE SEPARATION
CONSTRUCTION DETAILS
APN 247-130-019

DWG NO. R-4237
C-09
SHEET 50 OF 133
SCALE: AS SHOWN

AS-BUILTS

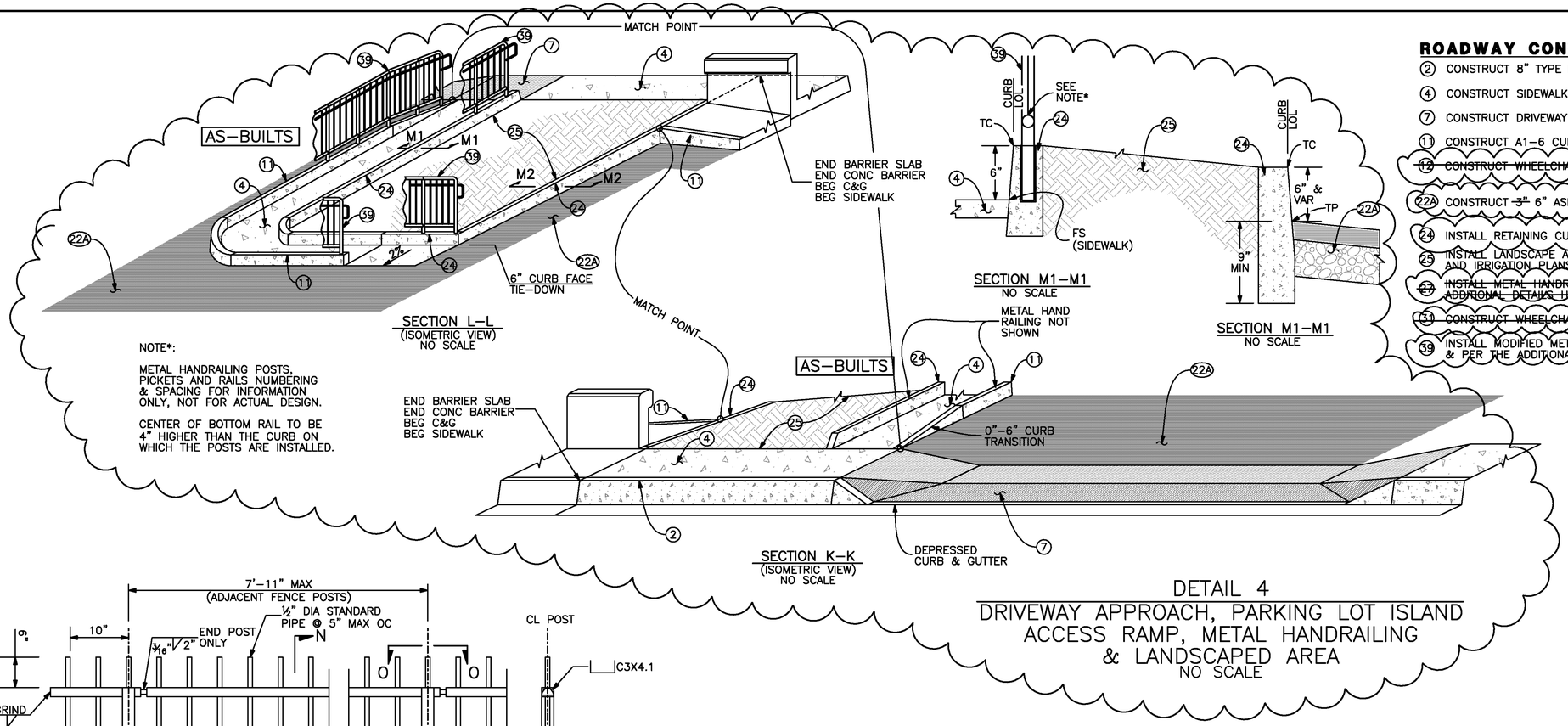

NOTE*:

METAL HANDRAILING POSTS, PICKETS AND RAILS NUMBERING & SPACING FOR INFORMATION ONLY, NOT FOR ACTUAL DESIGN.

CENTER OF BOTTOM RAIL TO BE 4" HIGHER THAN THE CURB ON WHICH THE POSTS ARE INSTALLED.

ROADWAY CONSTRUCTION NOTES:

(2) CONSTRUCT 8" TYPE I CURB & GUTTER PER THE CITY'S STD NO. 200.

(4) CONSTRUCT SIDEWALK, WIDTH PER PLAN, PER THE CITY'S STD NO. 325.

(7) CONSTRUCT DRIVEWAY APPROACH PER THE CITY'S STD NO. 302.

(11) CONSTRUCT A1-6 CURB PER APWA STD NO. 120-2.

~~(12) CONSTRUCT WHEELCHAIR RAMP (TYPE III) PER THE CITY'S STD NO. 304.~~ 2

(22A) CONSTRUCT ~~3"~~ 6" ASPHALT CONCRETE OVER ~~7"~~ 4" CRUSHED AGGREGATE BASE. 4

(24) INSTALL RETAINING CURB PER DETAIL 4 (SECTION M2-M2) HEREON. 5

(25) INSTALL LANDSCAPE AND IRRIGATION IMPROVEMENTS PER LANDSCAPE AND IRRIGATION PLANS.

~~(27) INSTALL METAL HANDRAILING PER SPPWC STD 606-3 AND PER THE ADDITIONAL DETAILS HEREON.~~ 5

~~(31) CONSTRUCT WHEELCHAIR RAMP PER DETAIL 7 ON SHEET C-11.~~ 2

(39) INSTALL MODIFIED METAL HANDRAILING PER ATTACHED DETAIL DRAWING & PER THE ADDITIONAL DETAILS HEREON. 5

AS-BUILTS

DETAIL 4
DRIVEWAY APPROACH, PARKING LOT ISLAND ACCESS RAMP, METAL HANDRAILING & LANDSCAPED AREA
NO SCALE

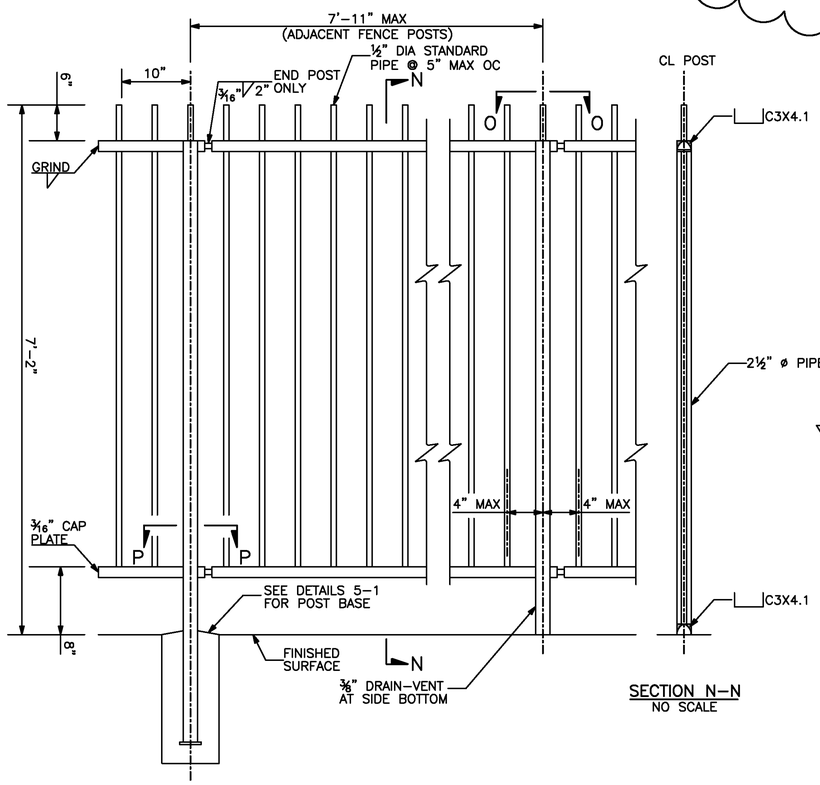

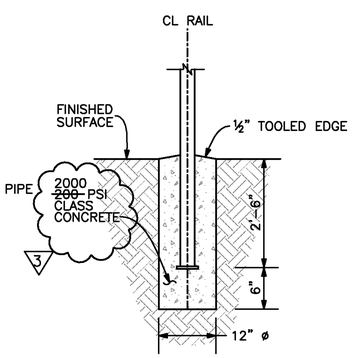

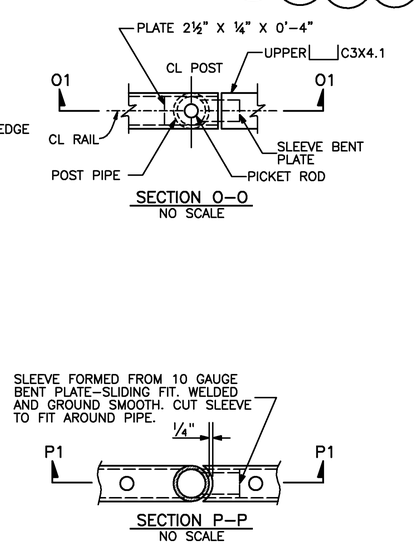

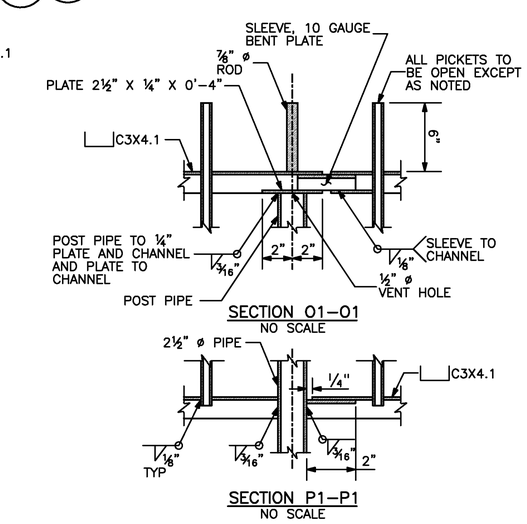

DETAIL 5
PICKET RAILING FENCE
NO SCALE

NOTES:

5.1 GRIND ALL WELDS SMOOTH.

5.2 ALL STEEL WORK SHALL BE GALVANIZED AND PAINTED WITH TWO (2) COATS OF POLYURETHANE PAINT.

5.3 CONTRACTOR SHALL SUBMIT DETAILED SHOP DRAWINGS FOR APPROVAL PRIOR TO FABRICATION.

5.4 SPACE POSTS TO CLEAR EXPANSION JOINTS BY 9" MIN TO CL OF POST. AT EXPANSION JOINTS IN DECK, RAIL JOINTS SHALL PROVIDE SAME ALLOWANCE FOR MOVEMENT WITH CORRESPONDING INCREASE IN LENGTH OF SLEEVE.

5.5 RAILING SHALL CONFORM TO HORIZONTAL AND VERTICAL ALIGNMENTS. POSTS AND BALUSTERS SHALL BE VERTICAL WITH A MAXIMUM DEVIATION NOT TO EXCEED ¼" IN 10'.

(5) CHANGE TO MODIFIED HAND RAIL ALONG WALKWAY; CHANGE WARNING/RETAINING CURB ON SOUTH SIDE OF WALKWAY; UPDATE WARNING/RETAINING CURB DETAIL (SECTION M2-M2); LENGTHENED LOWER LANDING AREA;

AS-BUILT REVISED PARKING LOT ISLAND IMPROVEMENTS: RETAINING CURB, RAILING, CONCRETE WALK, LANDSCAPE AREA ADDED TOTAL SHEET COUNT

ALL DIMENSIONS ARE IN FEET UNLESS OTHERWISE SHOWN

REGISTERED PROFESSIONAL ENGINEER PAOLAN TIMOTHY LEE No. C-75045 Exp. 12/3/2015 CIVIL STATE OF CALIFORNIA

AS-BUILT 08/01/14

Don't Dig...Until You Call U.S.A. Toll Free 1-800-227-2600 for the location of buried utility lines. Don't disrupt vital services. TWO WORKING DAYS BEFORE YOU DIG

PLANS PREPARED BY:
AECOM
901 VIA PIEMONTE, 5TH FLOOR
ONTARIO, CA 91764
(909) 579-3050

REGISTERED PROFESSIONAL ENGINEER JAMES M FARRAR No. C 55661 Exp. 12-12 CIVIL STATE OF CALIFORNIA

MARK	REVISIONS	APPR	DATE
5	ELIMINATE METAL HAND RAILING		5/17/12
5	REVISE DETAIL 4		11/1/12
5	REVISE PICKET RAILING FOOTING		3/25/13
5	CHANGED CONSTRUCTION NOTE 22		3/25/13
5	SEE ABOVE		6/11/13
AS-BUILT	SEE ABOVE		8/1/14

DESIGN BY TL DRAWN BY TL CHECKED BY BMS

IOWA AVENUE GRADE SEPARATION
CONSTRUCTION DETAILS
MISC DETAILS

DWG NO. R-4237
C-10
SHEET 51 OF 133
SCALE: AS SHOWN

AS-BUILTS

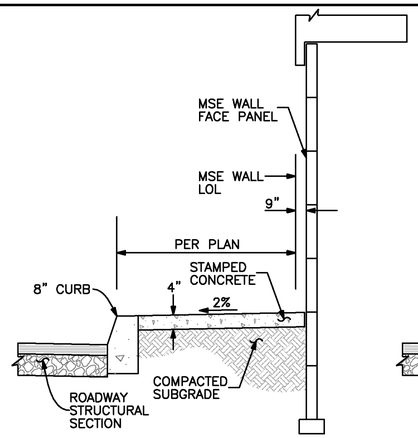

CASE I
PLACE AGAINST MSE WALL
NO SCALE

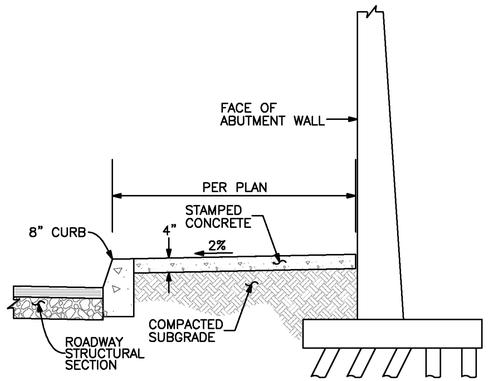

CASE II
PLACE AGAINST SOUTH BRIDGE ABUTMENT
NO SCALE

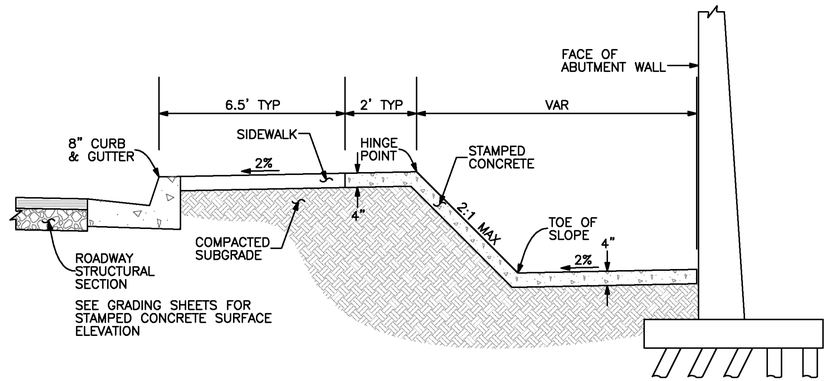

CASE III
PLACE AGAINST NORTH BRIDGE ABUTMENT
NO SCALE

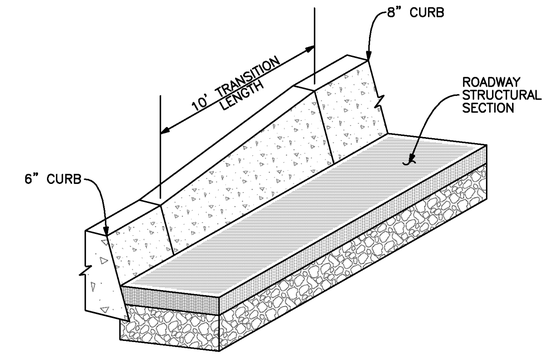

DETAIL 8
CURB TRANSITION
NO SCALE

NOTES:

6.1 ALL CONCRETE USED SHALL CONFORM TO CITY'S STD NO. 325 AND PER THE SPECIFICATIONS.

6.2 ALL WEAKENED PLANE JOINTS AND TRANSVERSE EXPANSION JOINTS SHALL BE CONSTRUCTED PER CITY'S STD NO. 325.

DETAIL 6
CONCRETE HARDSCAPE
NO SCALE

ROADWAY CONSTRUCTION NOTES:

(34) CONSTRUCT 48"X54" (TP-3) TRANSFORMER PAD PER THE PUBLIC UTILITIES UNDERGROUND STRUCTRES STDS 620 & 621 AND DETAIL 9 HEREON.

~~(35) CONSTRUCT CONCRETE BLOCK SLOUGH WALL FOR TRANSFORMER PAD PER SPPWC STD 622-3 AND DETAIL 9 HEREON.~~

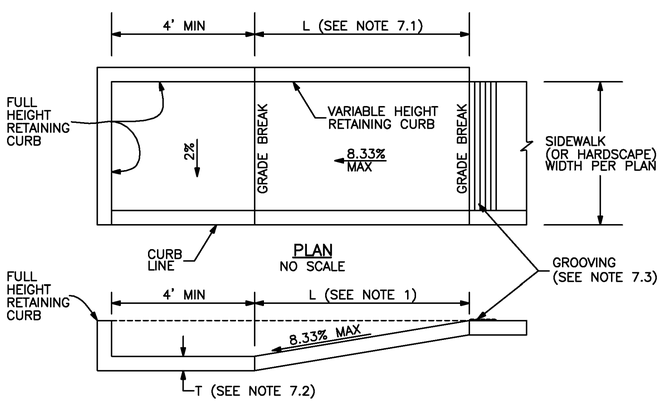

ELEVATION
NO SCALE

NOTES:

7.1 LENGTH (L) TO BE ADJUSTED TO MEET SLOPE REQUIREMENT (8.33% MAX) PER ADA.

7.2 THICKNESS (T) TO BE THE SAME AS THE SIDEWALK ON WHICH THE WHEELCHAIR RAMP IS CONSTRUCTED.

7.3 GROOVING SHALL BE CONSTRUCTED PER THE CITY'S STD NO. 304.

DETAIL 7
WHEELCHAIR RAMP
NO SCALE

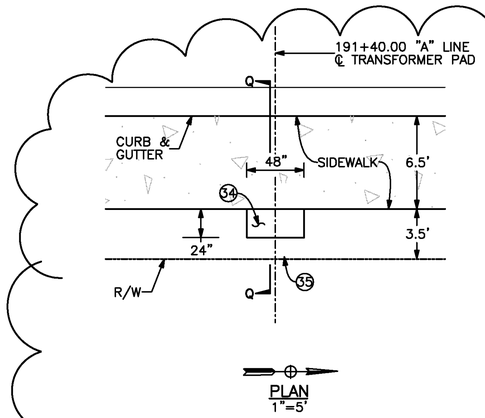

PLAN
1"=5'

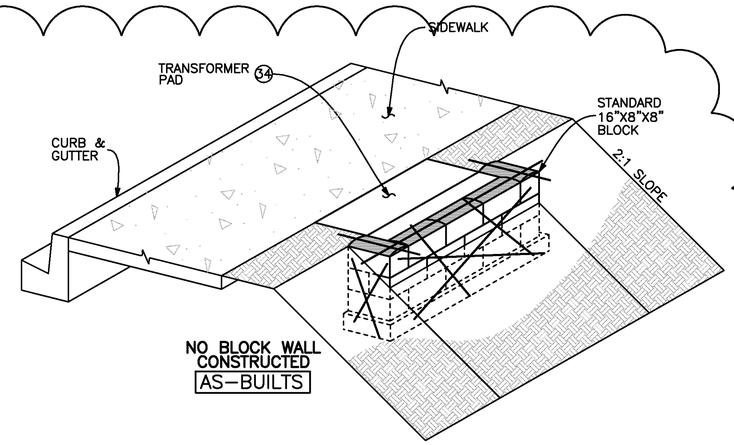

ISOMETRIC
NO SCALE

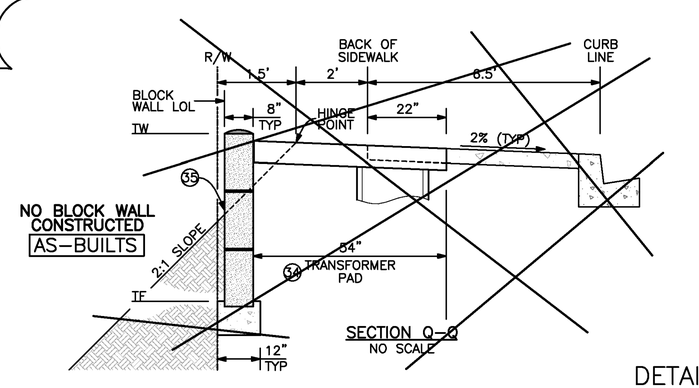

SECTION Q-Q
NO SCALE

NOTES:

~~9.1 ALL CONCRETE BLOCK SLOUG WALL DETAILS NOT SHOWN SHALL CONFORM TO SPPWC STD NO. 622-3.~~

~~9.2 CONTRACTOR SHALL VERIFY ALL INFORMATION INCLUDING ALL HORIZONTAL & VERTICAL CONTROLS SHOWN PRIOR TO CONSTRUCTION.~~

9.3 CONSTRUCTION AND INSTALLATION OF TRANSFORMER PAD SHALL BE INSPECTED AND APPROVED BY CITY'S PUBLIC UTILITIES DEPARTMENT.

DETAIL 9
TRANSFORMER PAD & CONCRETE BLOCK WALL
NO SCALE

REGISTERED PROFESSIONAL ENGINEER
ANTHONY TIMOTHY CHU
No. C-75045
Exp. 12/31/2015
CIVIL
STATE OF CALIFORNIA

AS-BUILT
08/01/14

Don't Dig...Until You Call U.S.A. Toll Free
1-800-227-2600
for the location of buried utility lines.
Don't disrupt vital service.
TWO WORKING DAYS BEFORE YOU DIG

PLANS PREPARED BY:
AECOM
901 VIA PIEMONTE, 5TH FLOOR
ONTARIO, CA 91764
(909) 579-3050

MARK	REVISIONS	APPR	DATE
AS-BUILT	COLLECTED CONCRETE BLOCKWALL ADDED TOTAL SHEET COUNT		8/1/14

DESIGN BY TL DRAWN BY TL CHECKED BY BMS

IOWA AVENUE
GRADE SEPARATION
CONSTRUCTION DETAILS
MISC DETAILS

DWG NO. R-4237
C-11
SHEET 52 OF 133
SCALE: AS SHOWN

AS-BUILTS

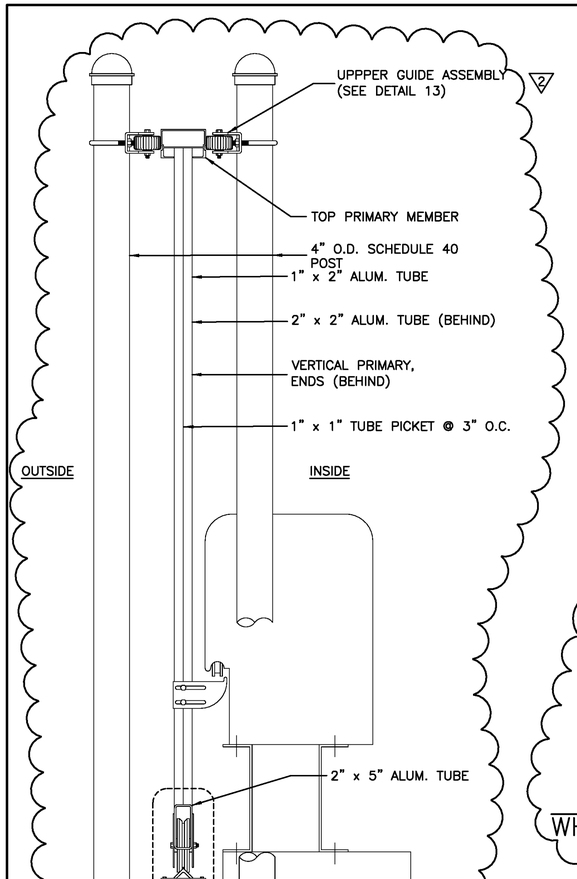

DETAIL 10
ASSEMBLY SECTION
NO SCALE

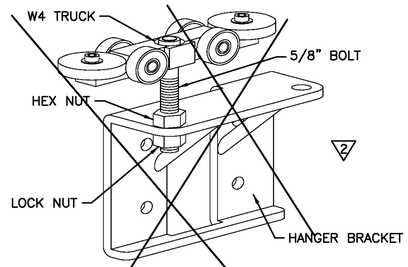

DETAIL 11
GATE HANGER
NO SCALE

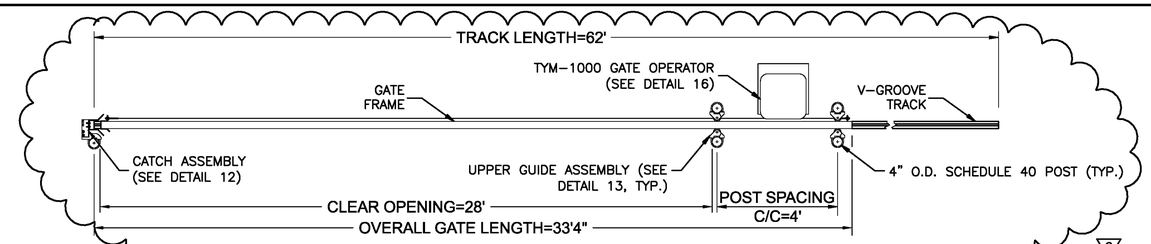

PLAN VIEW
AUTOMATIC SLIDING GATE
NO SCALE

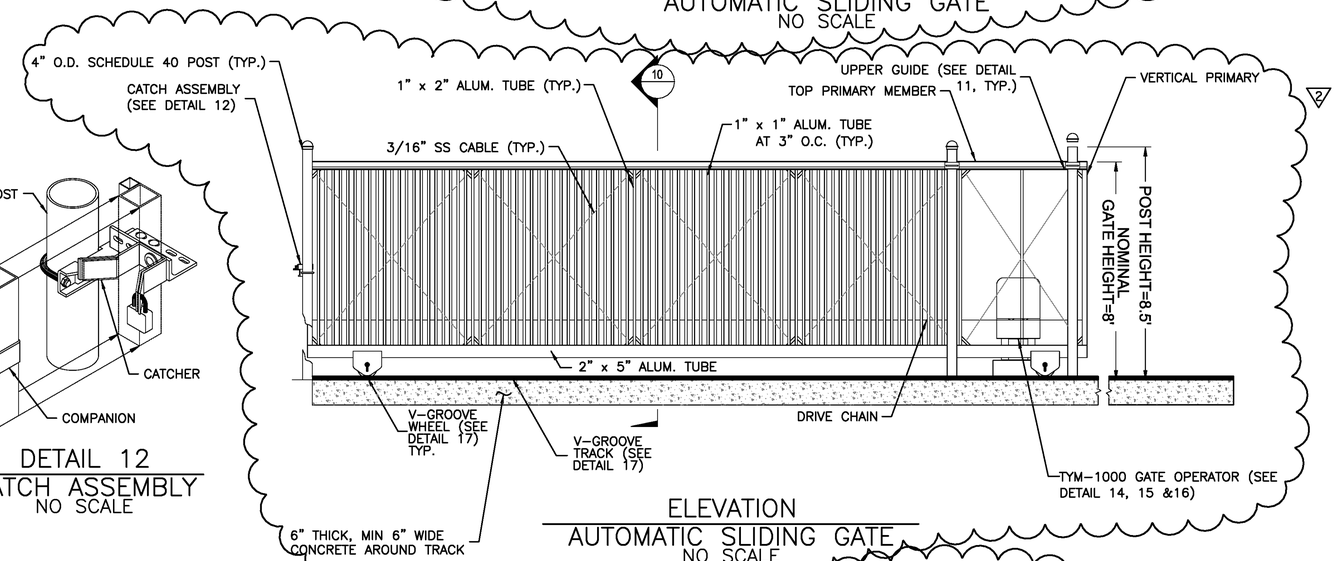

ELEVATION
AUTOMATIC SLIDING GATE
NO SCALE

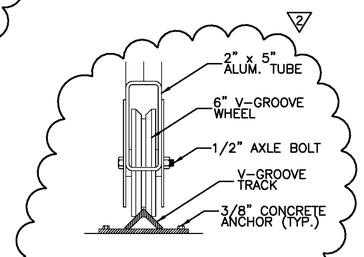

DETAIL 17
WHEEL & TRACK
NO SCALE

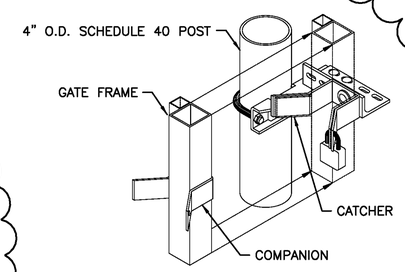

DETAIL 12
CATCH ASSEMBLY
NO SCALE

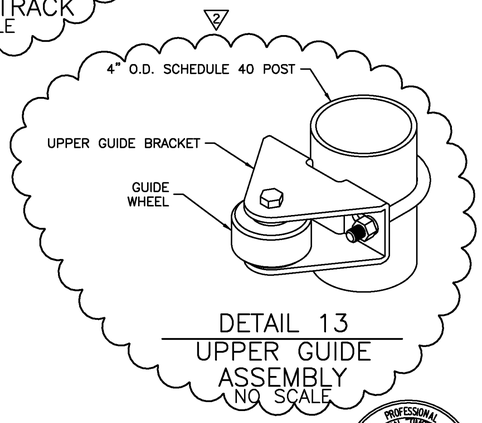

DETAIL 13
UPPER GUIDE ASSEMBLY
NO SCALE

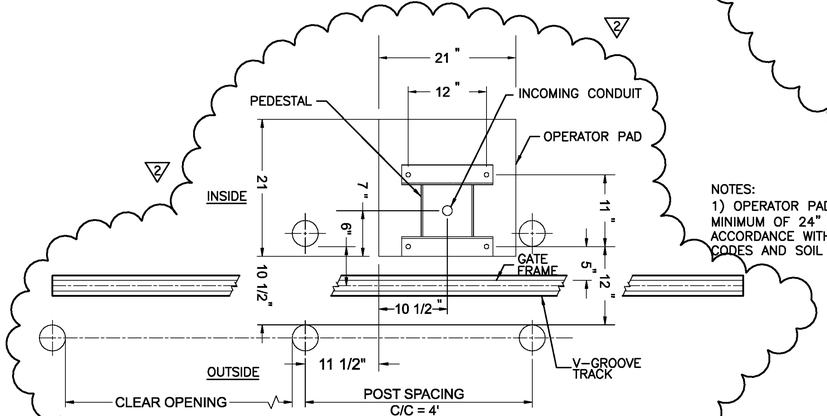

DETAIL 14
OPERATOR PAD LAYOUT PLAN
NO SCALE

NOTES:
1) OPERATOR PAD DEPTH TO BE MINIMUM OF 24" AND IN ACCORDANCE WITH ALL LOCAL CODES AND SOIL CONDITIONS.

REGISTERED PROFESSIONAL ENGINEER MARIANNY TIMOTHY CHU No. C-75045 Exp. 12/31/2015 CIVIL STATE OF CALIFORNIA

AS-BUILT
08/01/14

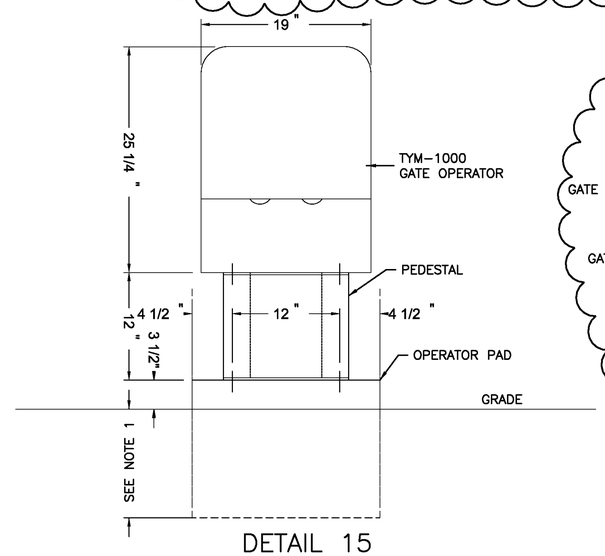

DETAIL 15
OPERATOR FRONT ELEVATION
NO SCALE

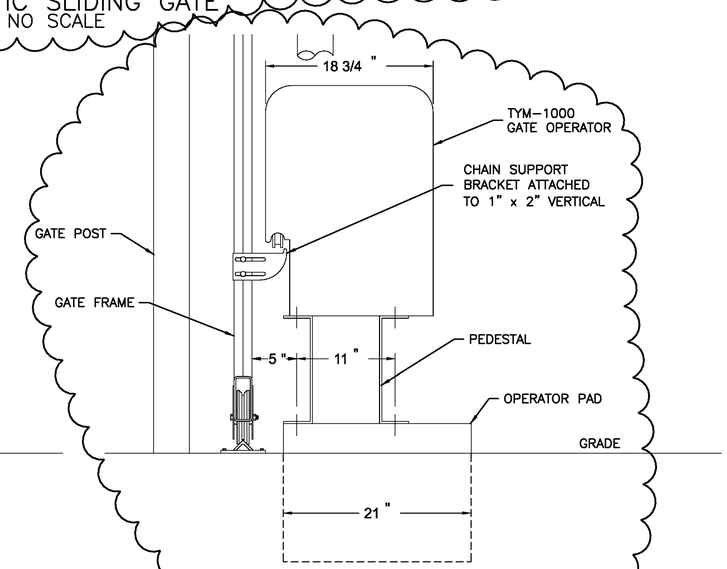

DETAIL 16
OPERATOR SIDE ELEVATION
NO SCALE

Don't Dig...Until You Call U.S.A. Toll Free
1-800-227-2600
for the location of buried utility lines.
Don't disrupt vital services.
TWO WORKING DAYS BEFORE YOU DIG

PLANS PREPARED BY:
AECOM
901 VIA PIEMONTE, 5TH FLOOR
ONTARIO, CA 91764
(909) 579-3050

REGISTERED PROFESSIONAL ENGINEER JAMES M. FARRAR No. C 55593 Exp. 12-2 CIVIL STATE OF CALIFORNIA

MARK	REVISIONS	APPR	DATE
7	ADDENDUM NO.1		5/9/12
	NEW SHEET FOR AUTOMATIC SLIDING GATE		
	CONSTRUCTION DETAIL		
7	REVISED GATE DETAIL TO		12/17/13
	ACCOMMODATE SITE RESTRICTION		
AS-BUILT	ADDED TOTAL SHEET COUNT		8/1/14

DESIGN BY TL DRAWN BY TL CHECKED BY BMS

IOWA AVENUE
GRADE SEPARATION
CONSTRUCTION DETAILS
AUTOMATIC SLIDING GATE

DWG NO. R-4237
C-12
SHEET 52a OF 133
SCALE: AS SHOWN

AS-BUILTS

NOTES:

1. HANGER POST SIZE WILL VARY DEPENDING ON THE CLEAR OPENING WIDTH.
2. ALL FITTINGS PROVIDED FOR 4" O.D. POSTS. OTHER SIZES AVAILABLE UPON REQUEST.
3. GATE ELEVATION IS VIEWED FROM THE OUTSIDE OF THE SECURE AREA LOOKING IN.

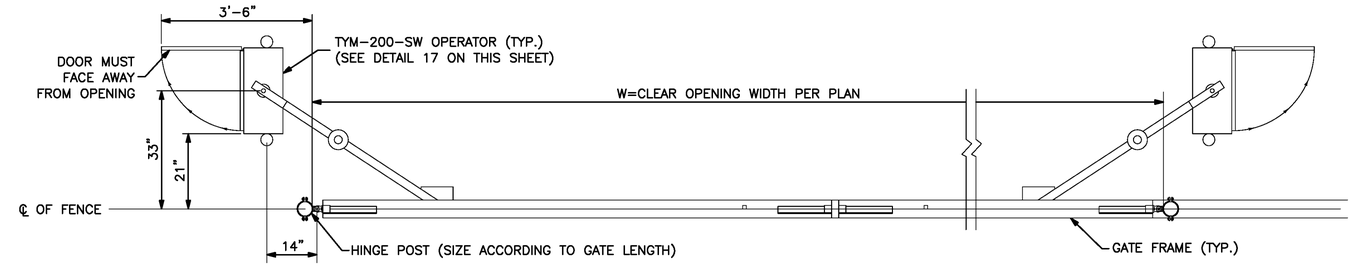

PLAN VIEW
AUTOMATIC SWING GATE
NO SCALE

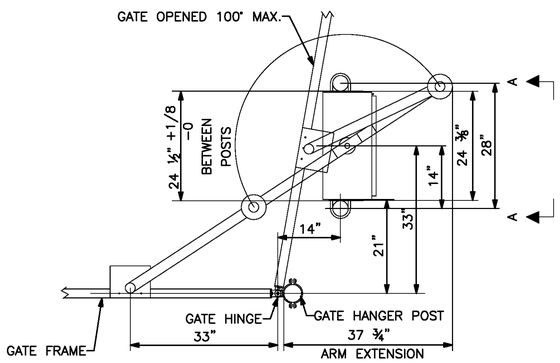

DETAIL 17
PLAN VIEW
NO SCALE

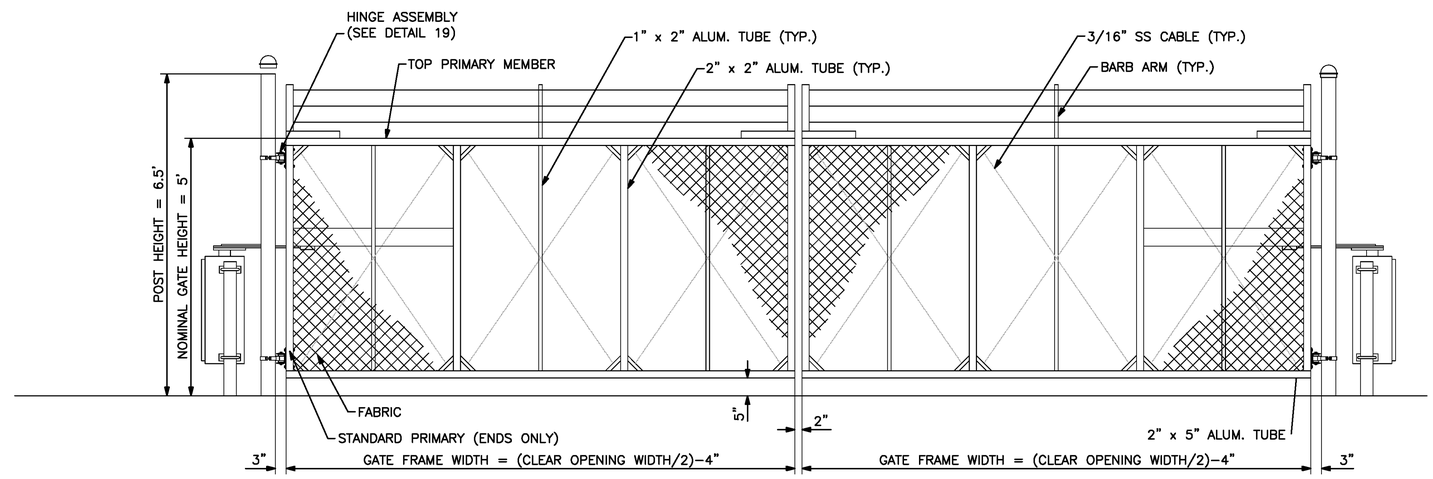

ELEVATION VIEW
AUTOMATIC SWING GATE
NO SCALE

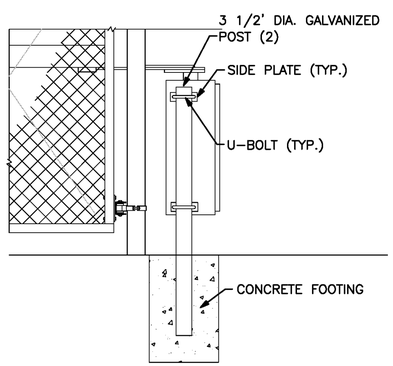

DETAIL 18
ELEVATION
NO SCALE

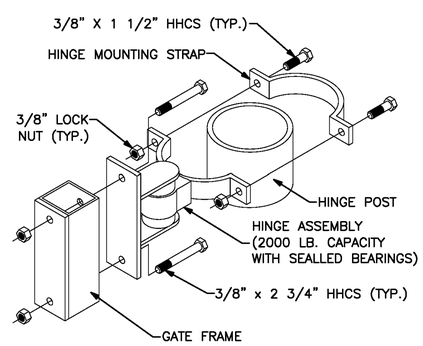

DETAIL 19
HINGE ASSEMBLY
NO SCALE

REGISTERED PROFESSIONAL ENGINEER HAOYUAN "IMOTHY" LIU No. C-75045 Exp. 12/31/2015 CIVIL STATE OF CALIFORNIA

AS-BUILT
08/01/14

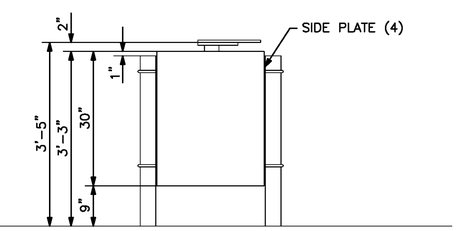

DETAIL 20
VIEW A-A
NO SCALE

NOTES:

1. CONCRETE FOOTING SIZE AND DEPTH TO BE DETERMINED BY CONTRACTOR.
2. SEE OPERATOR INSTALLATION GUIDE FOR COMPLETE INSTALLATION INSTRUCTIONS.

Don't Dig...Until You Call U.S.A. Toll Free 1-800-227-2600 for the location of buried utility lines. Don't disrupt vital services.
TWO WORKING DAYS BEFORE YOU DIG

PLANS PREPARED BY:
AECOM
901 VIA PIEMONTE, 5TH FLOOR
ONTARIO, CA 91764
(909) 579-3050

REGISTERED PROFESSIONAL ENGINEER JAMES M FARRIS No. C 45569 Exp. 12-12 CIVIL STATE OF CALIFORNIA

MARK	REVISIONS	APPR	DATE
V	NEW SHEET FOR AUTOMATIC SWING GATE		5/17/12
	CONSTRUCTION DETAIL		
AS-BUILT	ADDED TOTAL SHEET COUNT		8/1/14

DESIGN BY TL DRAWN BY TL CHECKED BY BMS

IOWA AVENUE
GRADE SEPARATION
CONSTRUCTION DETAILS
AUTOMATIC SWING GATE

DWG NO. R-4237
C-13
SHEET 52b OF 133
SCALE: AS SHOWN

AS-BUILTS

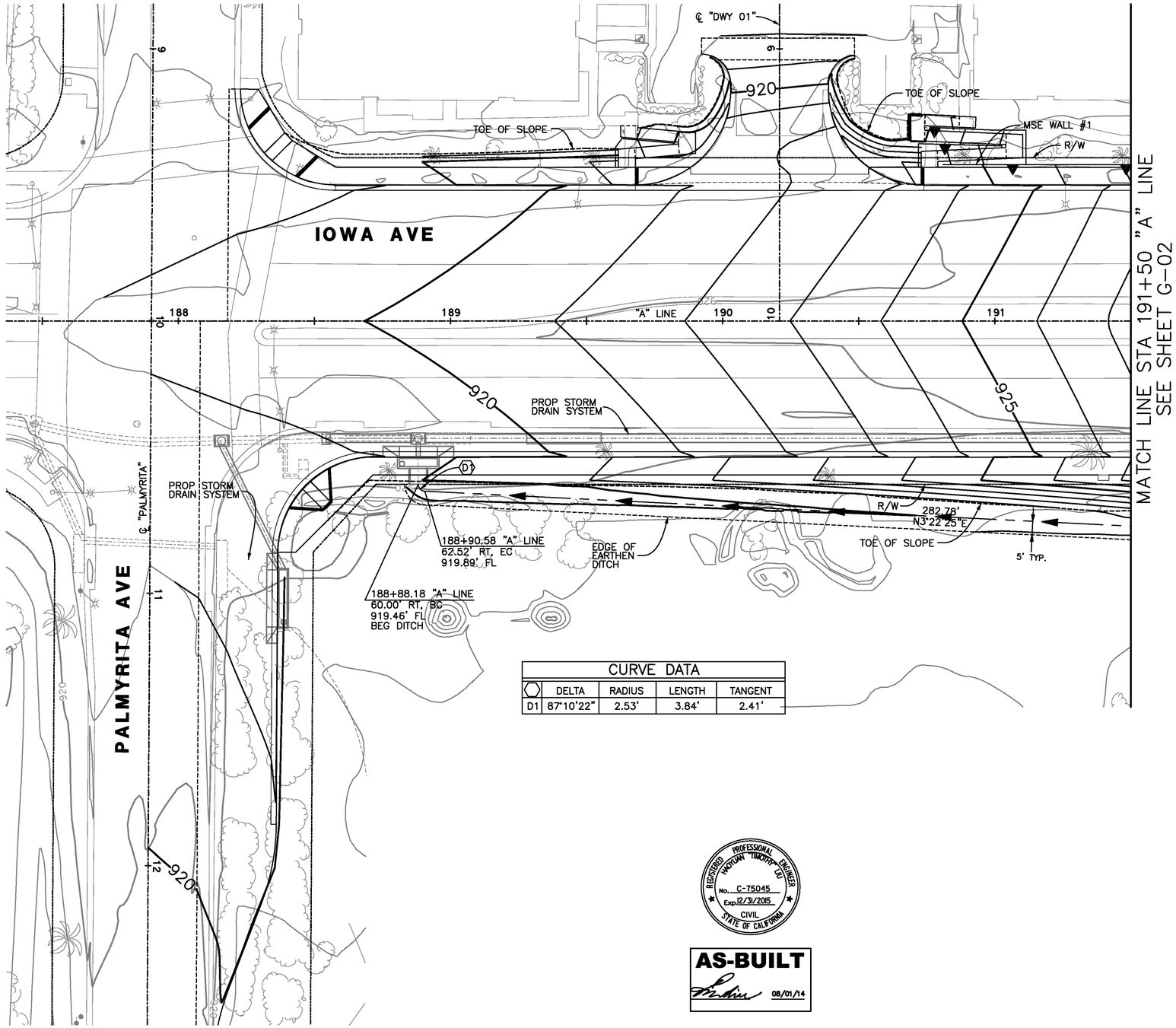

CURVE DATA				
	DELTA	RADIUS	LENGTH	TANGENT
D1	87°10'22"	2.53'	3.84'	2.41'

0 10 20 40 60 80
SCALE: 1" = 20'

REGISTERED PROFESSIONAL ENGINEER HUSTON TIMOTHY LEE No. C-75045 Exp. 12/31/2015 CIVIL STATE OF CALIFORNIA

AS-BUILT
08/01/14

Don't Dig...Until You Call U.S.A. Toll Free
1-800-227-2600
for the location of buried utility lines.
Don't disrupt vital services.
TWO WORKING DAYS BEFORE YOU DIG

PLANS PREPARED BY:
AECOM
901 VIA PIEMONTE, 5TH FLOOR
ONTARIO, CA 91764
(909) 579-3050

REGISTERED PROFESSIONAL ENGINEER JAMES M FARRAR No. C-55662 Exp. 12-2 CIVIL STATE OF CALIFORNIA

MARK	REVISIONS	APPR	DATE
AS-BUILT	ADDED TOTAL SHEET COUNT		8/1/14

DESIGN BY TL DRAWN BY TL CHECKED BY BMS

IOWA AVENUE
GRADE SEPARATION

GRADING

DWG NO. R-4237
G-01
SHEET 53 OF 133
SCALE: AS SHOWN

AS-BUILTS

CONSTRUCTION NOTES:

(21) CONSTRUCT PICKET RAILING FENCE PER DETAIL 5 ON SHEET C-10.

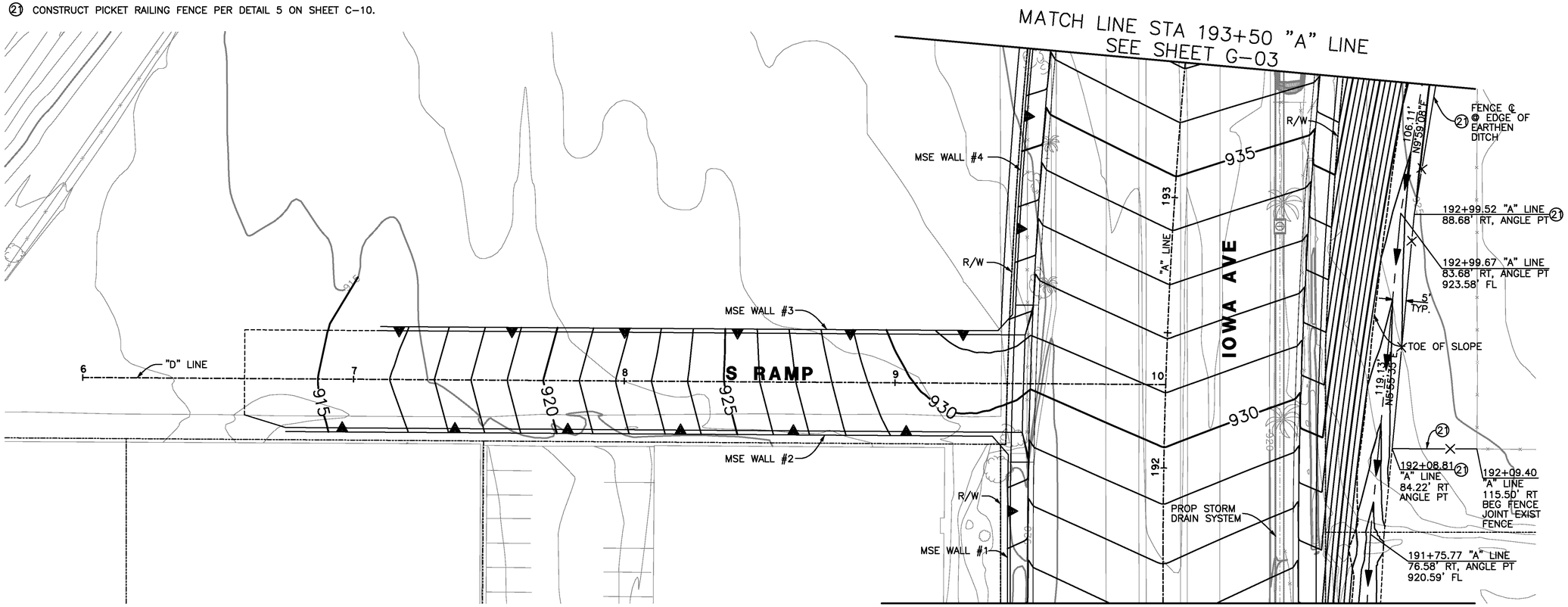

REGISTERED PROFESSIONAL ENGINEER
HOYONG TIMOTHY LEE
No. C-75045
Exp. 12/31/2015
CIVIL
STATE OF CALIFORNIA

AS-BUILT
08/01/14

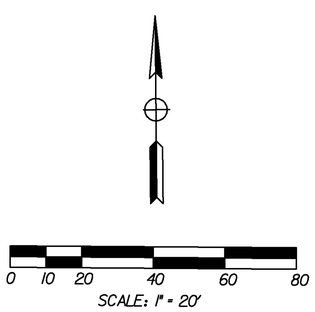

Don't Dig...Until You Call U.S.A. Toll Free
1-800-227-2600
for the location of buried utility lines.
Don't disrupt vital services.
TWO WORKING DAYS BEFORE YOU DIG

PLANS PREPARED BY:
AECOM
901 VIA PIEMONTE, 5TH FLOOR
ONTARIO, CA 91764
(909) 579-3050

REGISTERED PROFESSIONAL ENGINEER
JAMES M FARRIER
No. C 55662
Exp. 12-12
CIVIL
STATE OF CALIFORNIA

MARK	REVISIONS	APPR	DATE
AS-BUILT	ADDED TOTAL SHEET COUNT		8/1/14

DESIGN BY TL DRAWN BY TL CHECKED BY BMS

IOWA AVENUE
GRADE SEPARATION

GRADING

DWG NO. R-4237
G-02
SHEET 54 OF 133
SCALE: AS SHOWN

AS-BUILTS

CONSTRUCTION NOTES:

(21) CONSTRUCT PICKET RAILING FENCE PER DETAIL 5 ON SHEET C-10.

CURVE DATA				
	DELTA	RADIUS	LENGTH	TANGENT
D2	66°27'17"	45.99'	53.34'	30.13'
D3	74°53'10"	128.93'	168.51'	98.73'
D4	15°07'13"	138.62'	36.58'	18.40'

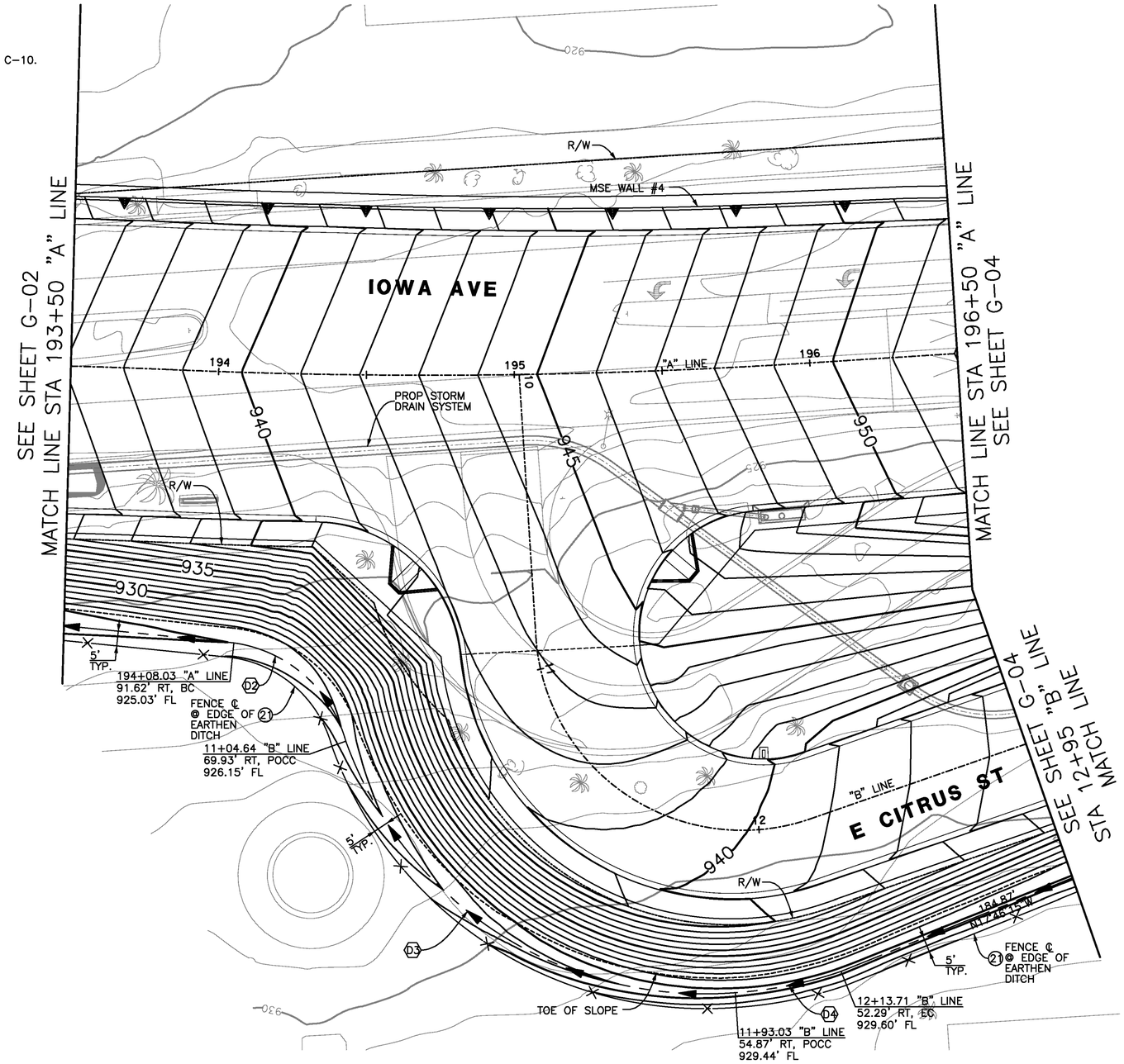

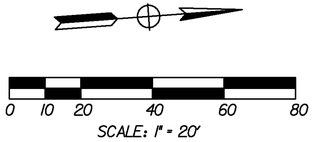

AS-BUILT

08/01/14

Don't Dig...Until You Call U.S.A. Toll Free
1-800-227-2600
for the location of buried utility lines.
Don't disrupt vital services.
TWO WORKING DAYS BEFORE YOU DIG

PLANS PREPARED BY:
AECOM
901 VIA PIEMONTE, 5TH FLOOR
ONTARIO, CA 91764
(909) 579-3050

REGISTERED PROFESSIONAL ENGINEER JAMES M FARRAR
No. C 55661
Exp. 12-12
CIVIL
STATE OF CALIFORNIA

MARK	REVISIONS	APPR	DATE
AS-BUILT	ADDED TOTAL SHEET COUNT		8/1/14

DESIGN BY TL DRAWN BY TL CHECKED BY BMS

IOWA AVENUE
GRADE SEPARATION

GRADING

DWG NO. R-4237
G-03
SHEET 55 OF 133

SCALE: AS SHOWN

AS-BUILTS

CONSTRUCTION NOTES:

(21) CONSTRUCT PICKET RAILING FENCE PER DETAIL 5 ON SHEET C-10.

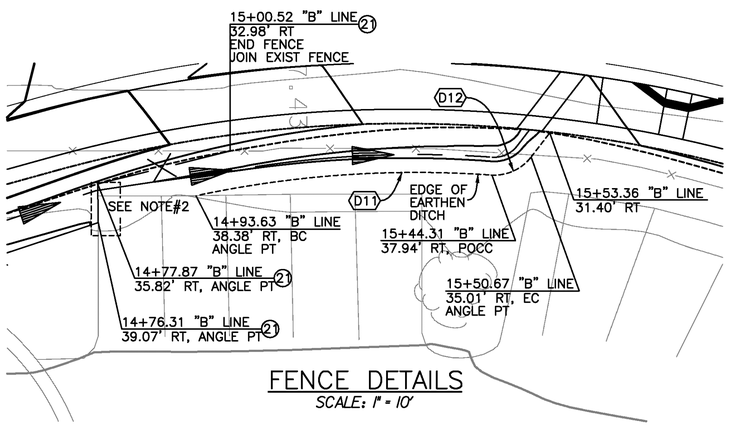

FENCE DETAILS

SCALE: 1" = 10'

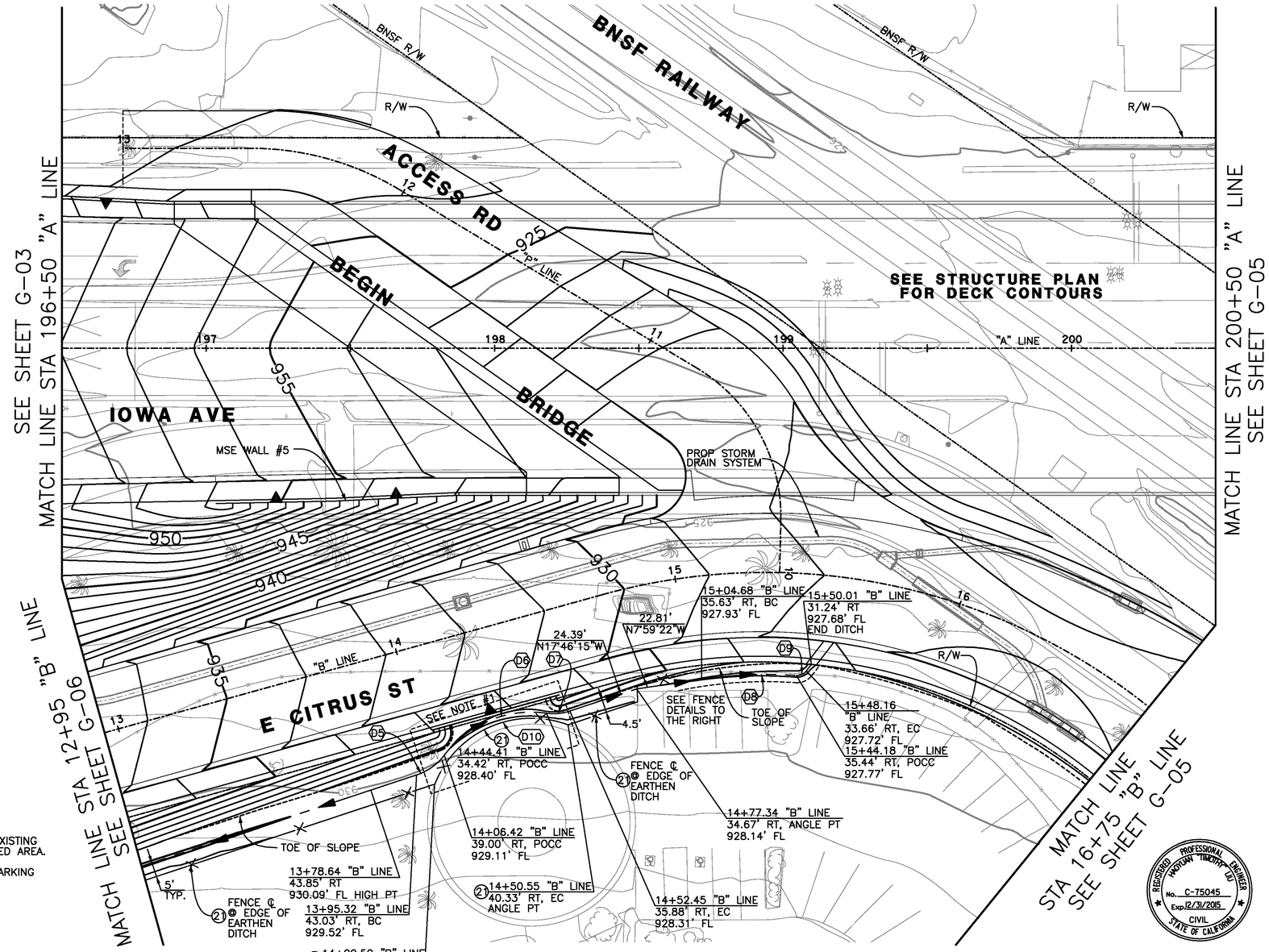

CURVE DATA				
⬡	DELTA	RADIUS	LENGTH	TANGENT
D5	34°21'25"	20.00'	11.99'	6.18'
D6	60°35'18"	37.93'	40.11'	22.16'
D7	26°13'52"	18.00'	8.24'	4.19'
D8	12°34'53"	149.82'	32.90'	16.52'
D9	56°24'58"	4.00'	3.94'	2.15'
D10	89°06'15"	36.00'	55.99'	35.44'
D11	16°07'21"	147.36'	41.46'	20.87'
D12	56°24'58"	6.50'	6.40'	3.49'

NOTES:

#1 FENCE ℄ LOCATES AT THE EDGE OF EXISTING CIRCULAR CONCRETE PAD IN THE BOXED AREA.

#2 FENCE ℄ LOCATES BEHIND EXISTING PARKING LOT CURB IN THE BOXED AREA.

0 10 20 40 60 80

SCALE: 1" = 20'

REGISTERED PROFESSIONAL ENGINEER HAOYUAN TIMOTHY LIU No. C-75045 Exp. 12/31/2015 CIVIL STATE OF CALIFORNIA

AS-BUILT 08/01/14

Don't Dig...Until You Call U.S.A. Toll Free 1-800-227-2600 for the location of buried utility lines. Don't disrupt vital services.

TWO WORKING DAYS BEFORE YOU DIG

PLANS PREPARED BY:

AECOM

901 VIA PIEMONTE, 5TH FLOOR
ONTARIO, CA 91764
(909) 579-3050

REGISTERED PROFESSIONAL ENGINEER JAMES M FARRAR No. C-55662 Exp. 12-31 CIVIL STATE OF CALIFORNIA

MARK	REVISIONS	APPR	DATE
AS-BUILT	ADDED TOTAL SHEET COUNT		8/1/14

DESIGN BY TL DRAWN BY TL CHECKED BY BMS

IOWA AVENUE
GRADE SEPARATION

GRADING

DWG NO. R-4237

G-04

SHEET 56 OF 133

SCALE: AS SHOWN

AS-BUILTS

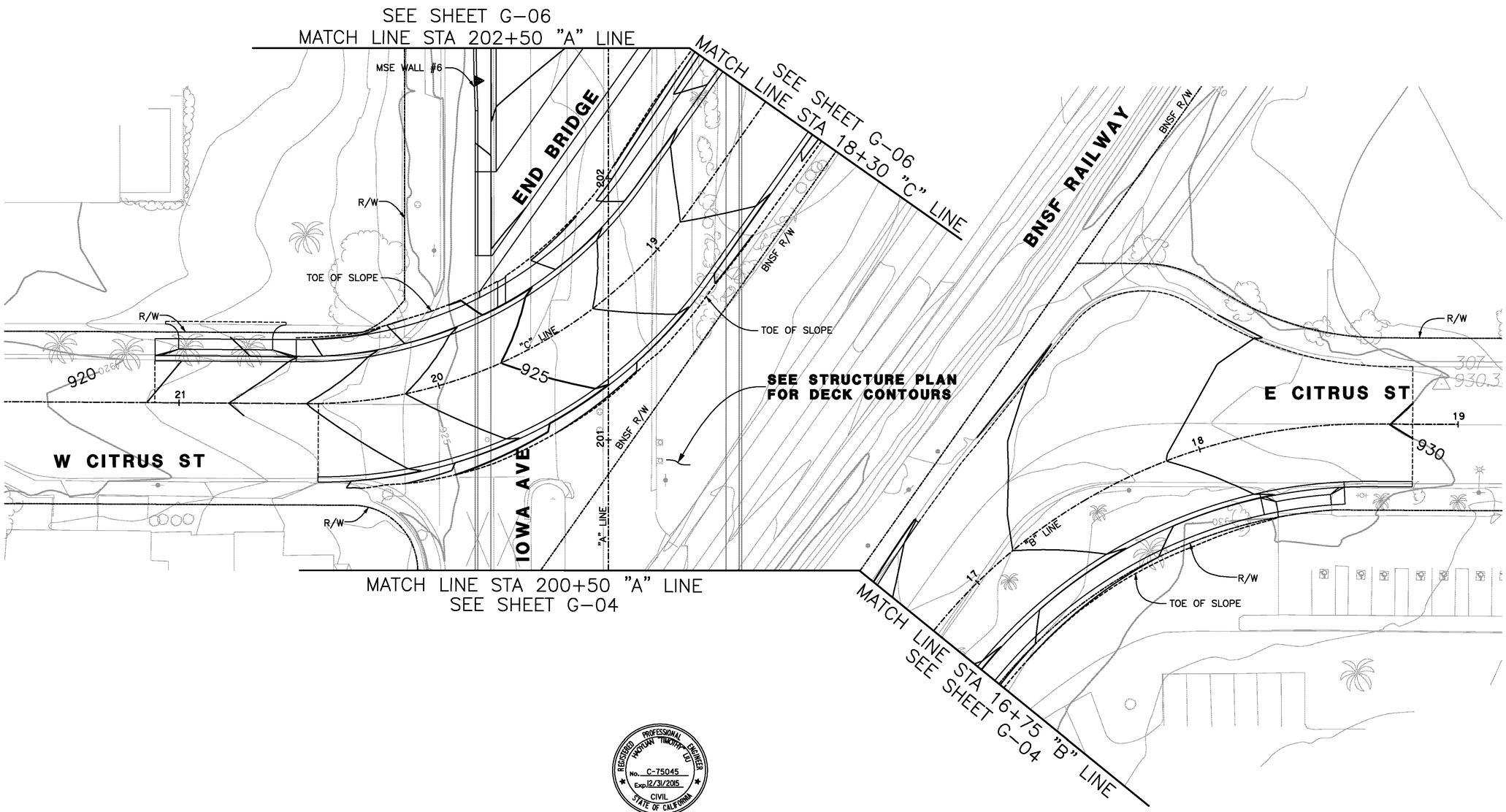

REGISTERED PROFESSIONAL ENGINEER
MORVAN TIMOTHY CU
No. C-75045
Exp. 12/31/2015
CIVIL
STATE OF CALIFORNIA

AS-BUILT
08/01/14

0 10 20 40 60 80
SCALE: 1" = 20'

Don't Dig...Until You Call U.S.A. Toll Free
1-800-227-2600
for the location of buried utility lines.
Don't disrupt vital services.
TWO WORKING DAYS BEFORE YOU DIG

PLANS PREPARED BY:
AECOM
901 VIA PIEMONTE, 5TH FLOOR
ONTARIO, CA 91764
(909) 579-3050

REGISTERED PROFESSIONAL ENGINEER
JAMES M FARRIS
No. C 45662
Exp. 12-12
CIVIL
STATE OF CALIFORNIA

MARK	REVISIONS	APPR	DATE
AS-BUILT	ADDED TOTAL SHEET COUNT		8/1/14

DESIGN BY TL DRAWN BY TL CHECKED BY BMS

IOWA AVENUE
GRADE SEPARATION

GRADING

DWG NO. R-4237
G-05
SHEET 57 OF 133
SCALE: AS SHOWN

AS-BUILTS

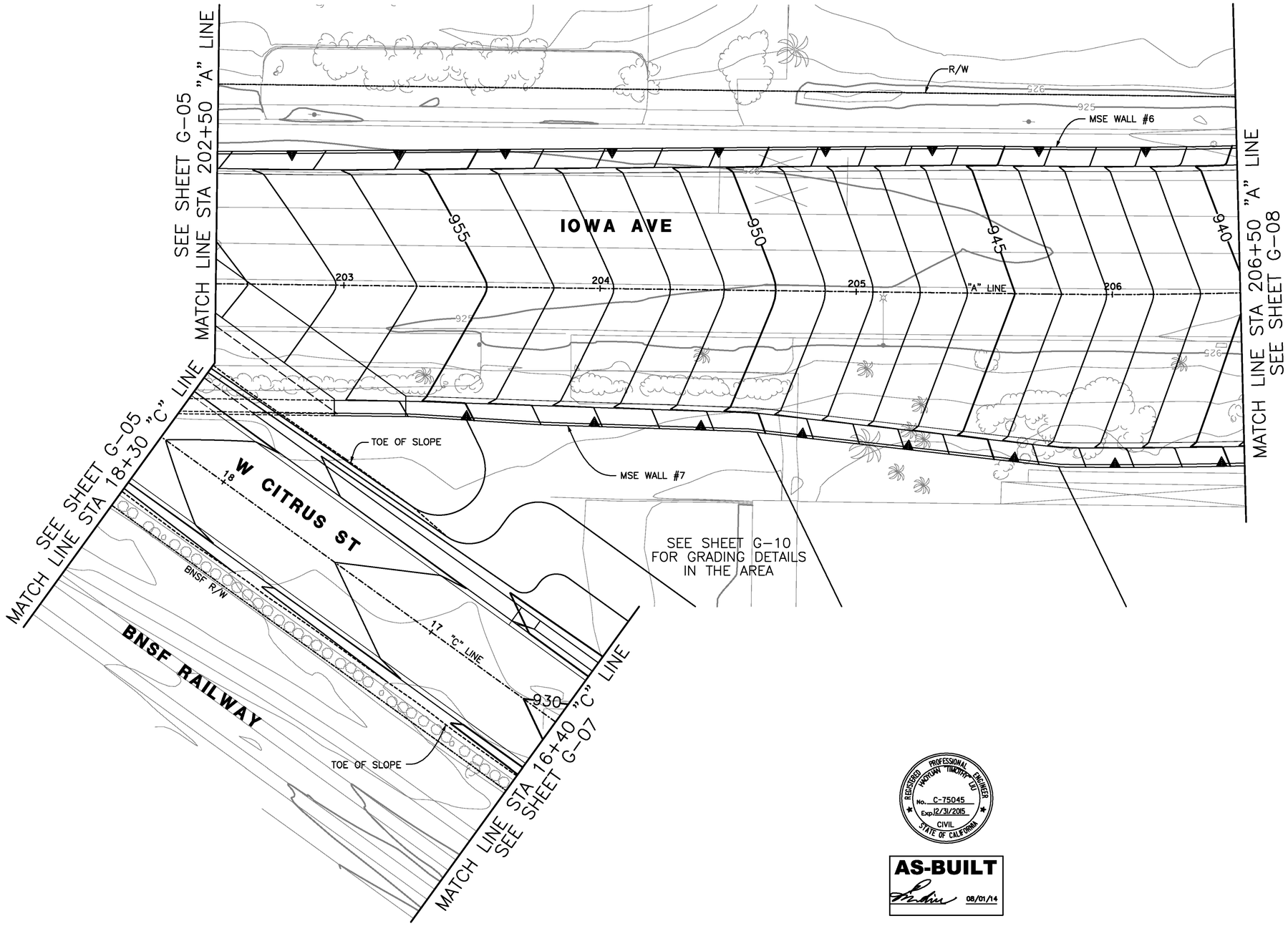

REGISTERED PROFESSIONAL ENGINEER
HAOYUAN TIMOTHY TU
No. C-75045
Exp. 12/31/2015
CIVIL
STATE OF CALIFORNIA

AS-BUILT
08/01/14

0 10 20 40 60 80
SCALE: 1" = 20'

Don't Dig...Until You Call U.S.A. Toll Free
1-800-227-2600
for the location of buried utility lines.
Don't disrupt vital services.
TWO WORKING DAYS BEFORE YOU DIG

PLANS PREPARED BY:
AECOM
901 VIA PIEMONTE, 5TH FLOOR
ONTARIO, CA 91764
(909) 579-3050

REGISTERED PROFESSIONAL ENGINEER
JAMES M FARRIS
No. C-55661
Exp. 12-31-12
CIVIL
STATE OF CALIFORNIA

MARK	REVISIONS	APPR	DATE
AS-BUILT	ADDED TOTAL SHEET COUNT		8/1/14

DESIGN BY TL DRAWN BY TL CHECKED BY BMS

IOWA AVENUE
GRADE SEPARATION

GRADING

DWG NO. R-4237
G-06
SHEET 58 OF 133

SCALE: AS SHOWN

AS-BUILTS

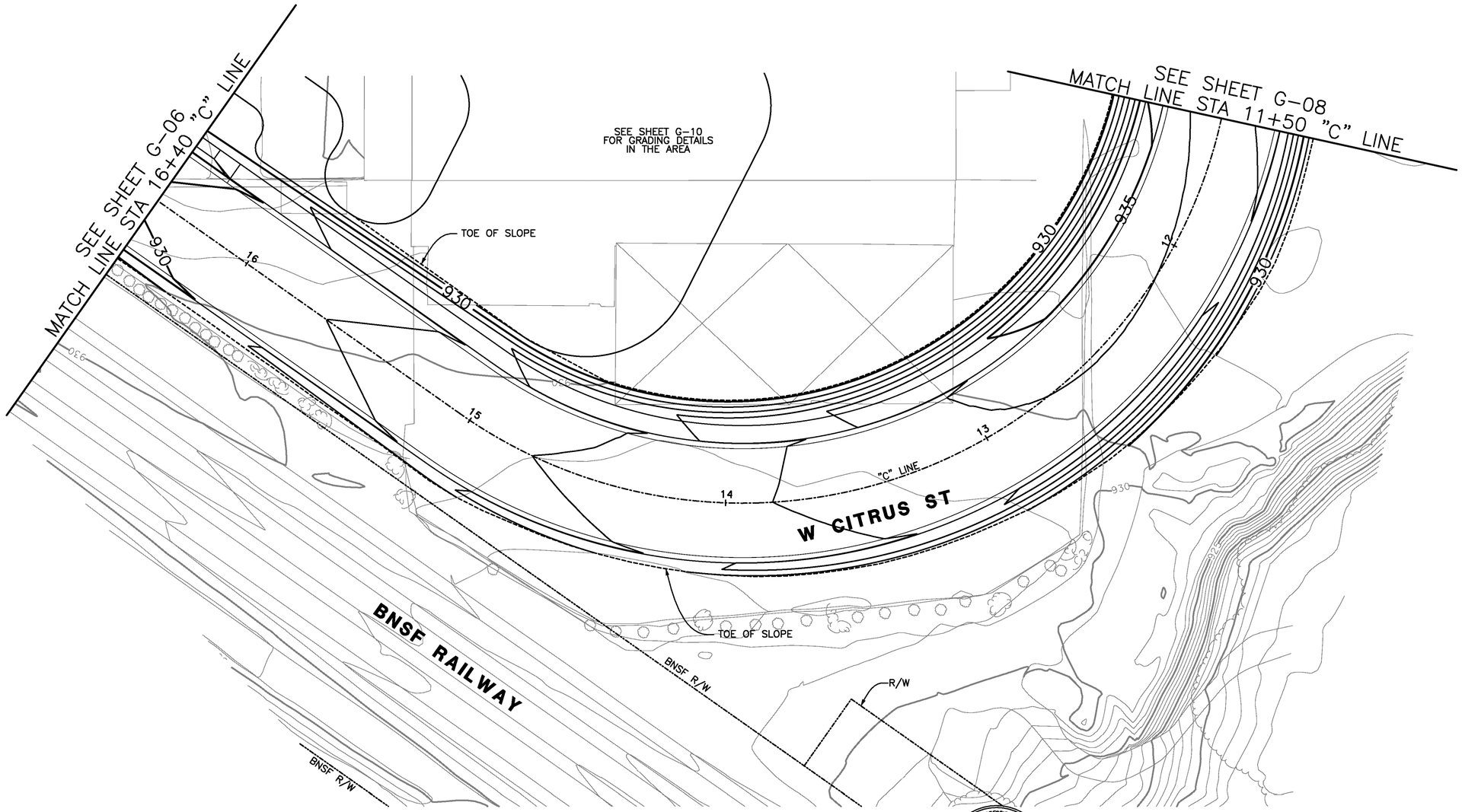

AS-BUILT
08/01/14

0 10 20 40 60 80
SCALE: 1" = 20'

Don't Dig...Until You Call U.S.A. Toll Free
1-800-227-2600
for the location of buried utility lines.
Don't disrupt vital services.
TWO WORKING DAYS BEFORE YOU DIG

PLANS PREPARED BY:
AECOM
901 VIA PIEMONTE, 5TH FLOOR
ONTARIO, CA 91764
(909) 579-3050

MARK	REVISIONS	APPR	DATE
AS-BUILT	ADDED TOTAL SHEET COUNT		8/1/14

DESIGN BY TL DRAWN BY TL CHECKED BY BMS

IOWA AVENUE
GRADE SEPARATION

GRADING

DWG NO. R-4237
G-07
SHEET 59 OF 133
SCALE: AS SHOWN

AS-BUILTS

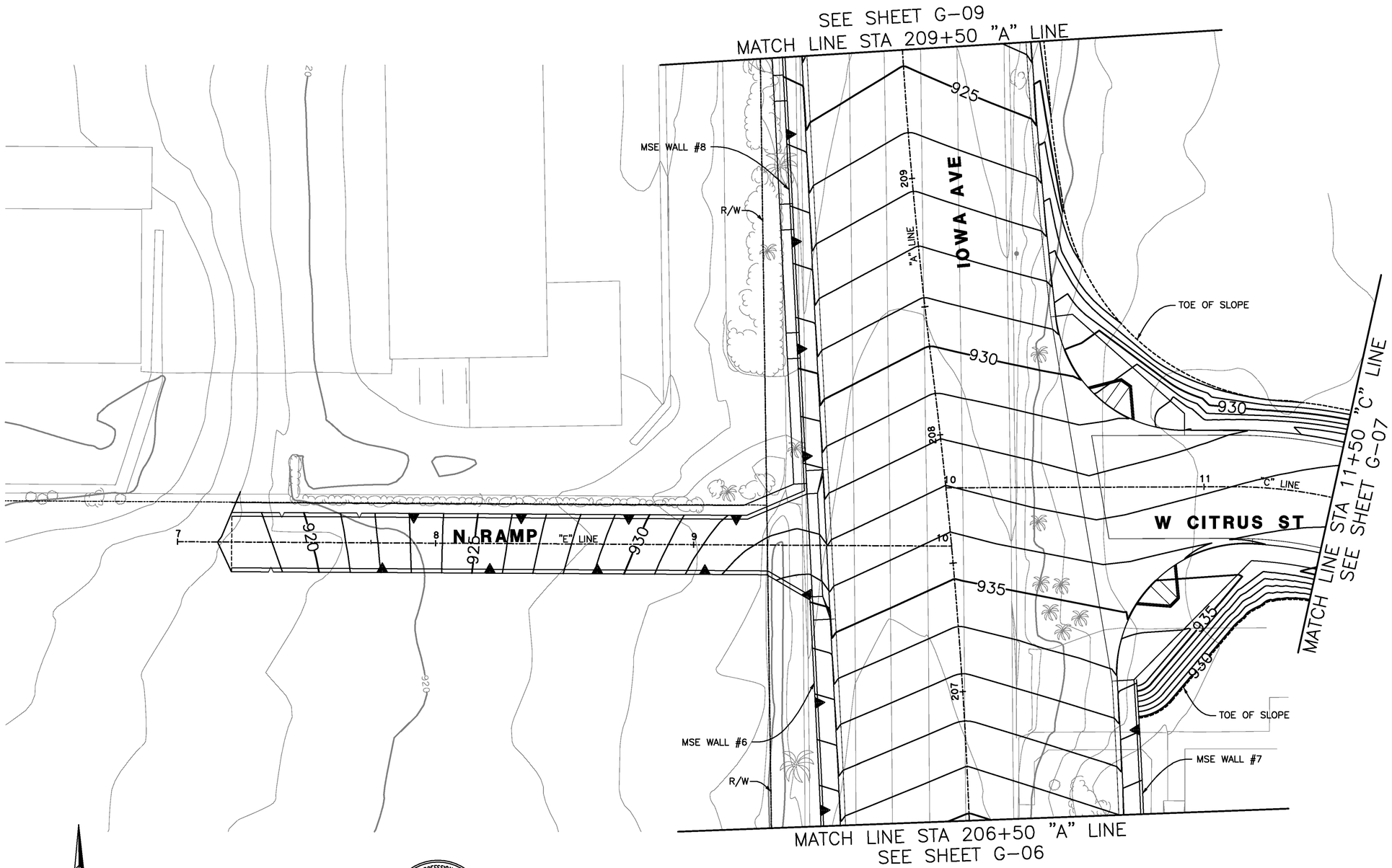

0 10 20 40 60 80

SCALE: 1" = 20'

REGISTERED PROFESSIONAL ENGINEER
MOHAN TIMONY LIU
No. C-75045
Exp. 12/31/2015
CIVIL
STATE OF CALIFORNIA

AS-BUILT
08/01/14

Don't Dig...Until You Call U.S.A. Toll Free
1-800-227-2600
for the location of buried utility lines.
Don't disrupt vital services.
TWO WORKING DAYS BEFORE YOU DIG

PLANS PREPARED BY:
AECOM
901 VIA PIEMONTE, 5TH FLOOR
ONTARIO, CA 91764
(909) 579-3050

REGISTERED PROFESSIONAL ENGINEER
JAMES M FARRELL
No. C 55662
Exp. 12-12
CIVIL
STATE OF CALIFORNIA

MARK	REVISIONS	APPR	DATE
AS-BUILT	ADDED TOTAL SHEET COUNT		8/1/14

DESIGN BY TL DRAWN BY TL CHECKED BY BMS

IOWA AVENUE
GRADE SEPARATION

GRADING

DWG NO. R-4237
G-08
SHEET 60 OF 133

SCALE: AS SHOWN

AS-BUILTS

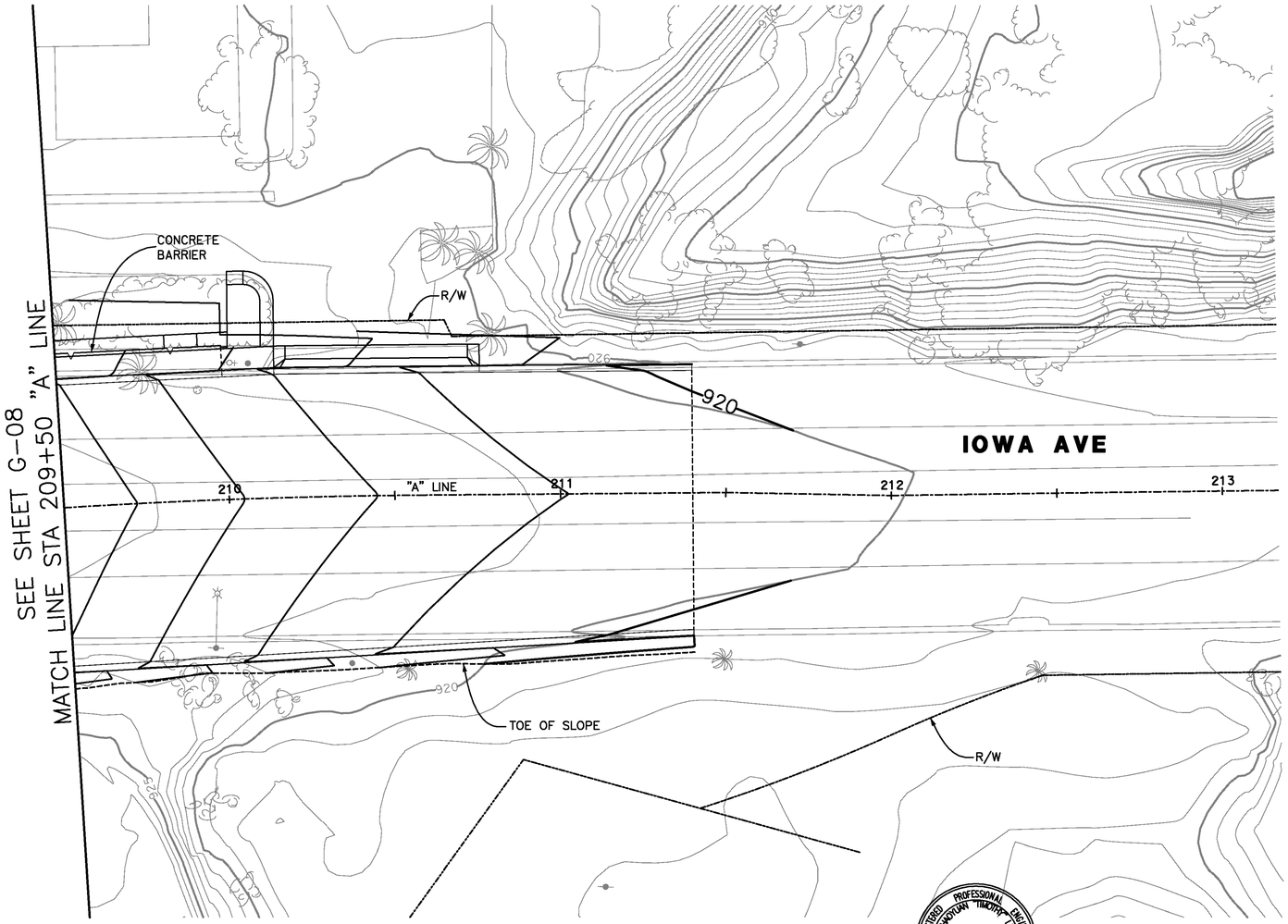

REGISTERED PROFESSIONAL ENGINEER
HAOYUAN TIMOTHY LIU
No. C-75045
Exp. 12/31/2015
CIVIL
STATE OF CALIFORNIA

AS-BUILT
08/01/14

0 10 20 40 60 80
SCALE: 1" = 20'

Don't Dig...Until You Call U.S.A. Toll Free
1-800-227-2600
for the location of buried utility lines.
Don't disrupt vital services.
TWO WORKING DAYS BEFORE YOU DIG

PLANS PREPARED BY:
AECOM
901 VIA PIEMONTE, 5TH FLOOR
ONTARIO, CA 91764
(909) 579-3050

REGISTERED PROFESSIONAL ENGINEER
JAMES M FARRELL
No. C 65662
Exp. 12-2
CIVIL
STATE OF CALIFORNIA

MARK	REVISIONS	APPR	DATE
AS-BUILT	ADDED TOTAL SHEET COUNT		8/1/14

DESIGN BY TL DRAWN BY TL CHECKED BY BMS

IOWA AVENUE
GRADE SEPARATION

GRADING

DWG NO. R-4237
G-09
SHEET 61 OF 133
SCALE: AS SHOWN

AS-BUILTS

203+75.00 "A" LINE
53.39' RT
927.23' FS

203+50.00 "A" LINE
52.13' RT
927.01' FS

203+25.00 "A" LINE
51.00' RT
926.79' FS

203+09.29 "A" LINE
51.00' RT
926.65' FS

204+00.00 "A" LINE
53.97' RT
927.45' FS

204+25.00 "A" LINE
54.47' RT
927.67' FS

204+50.00 "A" LINE
54.97' RT
927.89' FS

204+75.00 "A" LINE
56.78' RT
928.11' FS

205+50.00 "A" LINE
64.35' RT
928.75' FS

205+75.00 "A" LINE
66.88' RT
928.96' FS

206+00.00 "A" LINE
67.55' RT
929.19' FS

206+75.00 "A" LINE
67.56' RT
929.89' FS

207+00.00 "A" LINE
67.49' RT
936.52' FS

207+00.34 "A" LINE
67.49' RT
936.61' FS

206+50.00 "A" LINE
67.60' RT
929.66' FS

206+25.00 "A" LINE
67.59' RT
929.42' FS

205+25.00 "A" LINE
61.83' RT
928.53' FS

205+00.00 "A" LINE
59.31' RT
928.32' FS

202 203 "A" LINE 204 205 206 207 208

IOWA AVE

955 950 945 940 935 930 927 928 929

-1.0%

TOE OF SLOPE

18 17 16 15 14 13 12 11 10

"C" LINE

GRADE TO PROPOSED ELEVATIONS HEREON

APN 247-150-007

W CITRUS ST

RET WALL #7

PROPOSED ROADWAY IMPROVEMENT

FS (ELEV. AT FACE OF MSE WALL)

PROPOSED GRADING

OG

-0.50%

SECTION R–R
NO SCALE

0 10 20 40 60 80
SCALE: 1" = 20'

REGISTERED PROFESSIONAL ENGINEER
HAORAN TIMORY LIU
No. C-75045
Exp. 12/31/2015
CIVIL
STATE OF CALIFORNIA

AS-BUILT
08/01/14

Don't Dig...Until You Call U.S.A. Toll Free
1-800-227-2600
for the location of buried utility lines.
Don't disrupt vital services.
TWO WORKING DAYS BEFORE YOU DIG

PLANS PREPARED BY:
AECOM
901 VIA PIEMONTE, 5TH FLOOR
ONTARIO, CA 91764
(909) 579-3050

REGISTERED PROFESSIONAL ENGINEER
JAMES M FARRAR IV
No. C 65593
Exp. 12-2
CIVIL
STATE OF CALIFORNIA

MARK	REVISIONS	APPR	DATE
AS-BUILT	ADDED TOTAL SHEET COUNT		8/1/14

DESIGN BY TL DRAWN BY TL CHECKED BY BMS

IOWA AVENUE
GRADE SEPARATION

GRADING DETAILS
APN 247-150-007

DWG NO. R-4237
G-10
SHEET 62 OF 133
SCALE: AS SHOWN

AS–BUILTS

FREEBOARD SUMMARY TABLE				
LINE	STA	FG ELEV	HGL ELEV	FREEBOARD
A	141+91.65	919.4	918.4	1.0
A	145+92.76	933.4	919.2	14.2
A	149+61.03	939.6	920.1	19.5
A	151+31.28	931.7	920.9	10.6
A	153+61.10	926.1	922.3	3.8
A	153+71.69	926.1	922.3	3.8

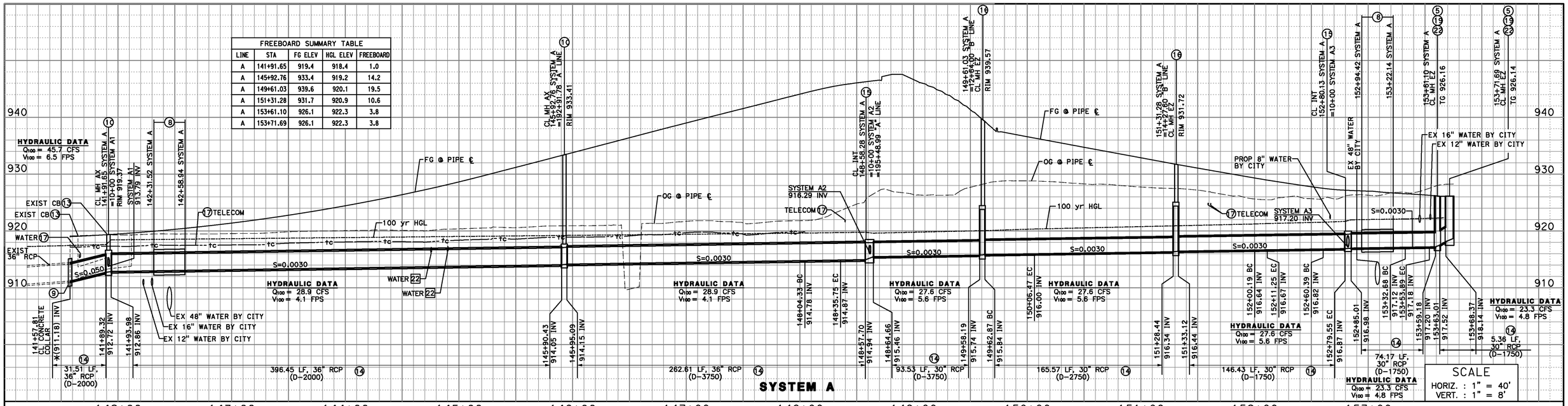

CURVE DATA				
No.	R	Δ	T	L
1	45.0'	40°00'00"	16.38'	31.42'
2	45.0'	55°30'40"	23.68'	43.60'
3	45.0'	14°05'06"	5.56'	11.06'
4	30.0'	36°35'33"	9.92'	19.16'
5	30.0'	40°30'30"	11.07'	21.21'
6	45.0'	30°45'39"	12.38'	24.16'

LEGEND:

- RCP REINFORCED CONCRETE PIPE
- CB CATCH BASIN
- SD STORM DRAIN
- AP ANGLE POINT
- DI DRAINAGE INLET
- INV INVERT
- BC BEGIN CURVE
- EC END CURVE
- * CONTRACTOR TO VERIFY
- INT INTERSECTION
- CL CENTERLINE

DEMOLITION NOTES:

22 ABANDONED IN PLACE

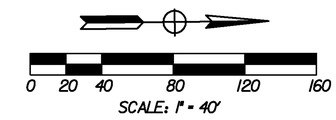

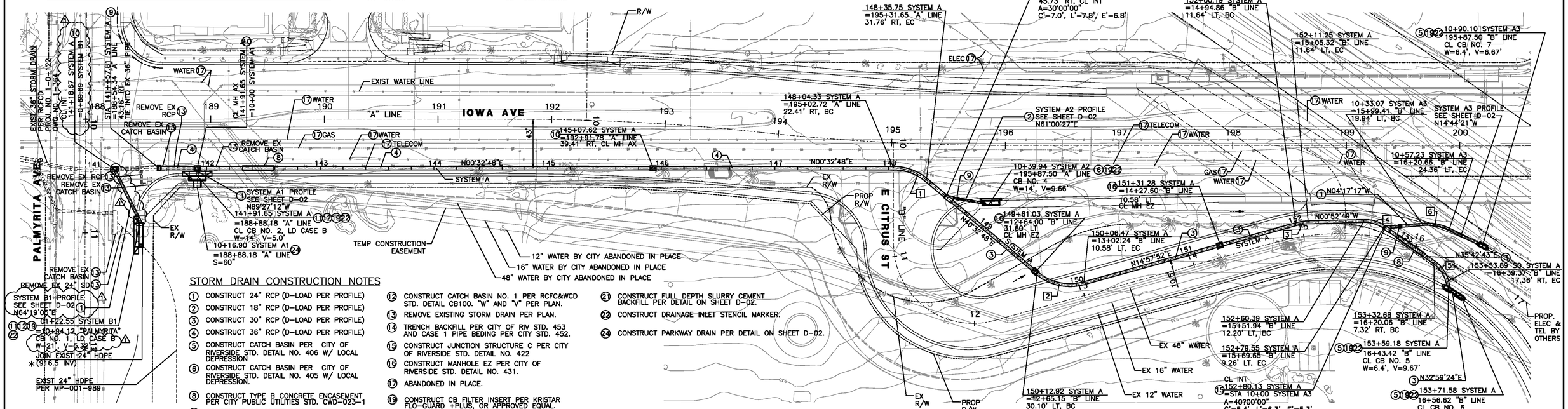

STORM DRAIN CONSTRUCTION NOTES

1. CONSTRUCT 24" RCP (D-LOAD PER PROFILE)
2. CONSTRUCT 18" RCP (D-LOAD PER PROFILE)
3. CONSTRUCT 30" RCP (D-LOAD PER PROFILE)
4. CONSTRUCT 36" RCP (D-LOAD PER PROFILE)
5. CONSTRUCT CATCH BASIN PER CITY OF RIVERSIDE STD. DETAIL NO. 406 W/ LOCAL DEPRESSION
6. CONSTRUCT CATCH BASIN PER CITY OF RIVERSIDE STD. DETAIL NO. 405 W/ LOCAL DEPRESSION.
8. CONSTRUCT TYPE B CONCRETE ENCASEMENT PER CITY PUBLIC UTILITIES STD. CWD-023-1
9. CONSTRUCT CONCRETE COLLAR PER RCFC&WCD STD. DETAIL M803.
10. CONSTRUCT MANHOLE AX PER CITY OF RIVERSIDE STD. DETAIL NO. 430.
11. CONSTRUCT LOCAL DEPRESSION NO. 2 PER RCFC&WCD STD. DETAIL LD201. CASE B AND "W" PER PLAN.
12. CONSTRUCT CATCH BASIN NO. 1 PER RCFC&WCD STD. DETAIL CB100. "W" AND "V" PER PLAN.
13. REMOVE EXISTING STORM DRAIN PER PLAN.
14. TRENCH BACKFILL PER CITY OF RIV STD. 453 AND CASE 1 PIPE BEDING PER CITY STD. 452.
15. CONSTRUCT JUNCTION STRUCTURE C PER CITY OF RIVERSIDE STD. DETAIL NO. 422
16. CONSTRUCT MANHOLE EZ PER CITY OF RIVERSIDE STD. DETAIL NO. 431.
17. ABANDONED IN PLACE.
19. CONSTRUCT CB FILTER INSERT PER KRISTAR FLO-GUARD +PLUS, OR APPROVED EQUAL.
21. CONSTRUCT FULL DEPTH SLURRY CEMENT BACKFILL PER DETAIL ON SHEET D-02.
22. CONSTRUCT DRAINAGE INLET STENCIL MARKER.
24. CONSTRUCT PARKWAY DRAIN PER DETAIL ON SHEET D-02.

REGISTERED PROFESSIONAL ENGINEER ROBERT WONG No. C-64734 Exp. 06/30/2015 CIVIL STATE OF CALIFORNIA

AS-BUILT 08/01/14

Don't Dig...Until You Call U.S.A. Toll Free 1-800-227-2600 for the location of buried utility lines. Don't disrupt vital services. TWO WORKING DAYS BEFORE YOU DIG

PLANS PREPARED BY:
AECOM
901 VIA PIEMONTE, 5TH FLOOR
ONTARIO, CA 91764
(909) 579-3050

REGISTERED PROFESSIONAL ENGINEER JAMES M. FARRAW No. C 45663 Exp. 12-12 CIVIL STATE OF CALIFORNIA

MARK	REVISIONS	APPR	DATE
1 AS-BUILT	REVISED SYS B1 ADDED TOTAL SHEET COUNT		8/1/14

DESIGN BY RW DRAWN BY PM CHECKED BY RW

IOWA AVENUE GRADE SEPARATION

STORM DRAIN PLAN & PROFILE

DWG NO. D-864
D-01
SHEET 63 OF 133
SCALE: AS SHOWN

AS-BUILTS

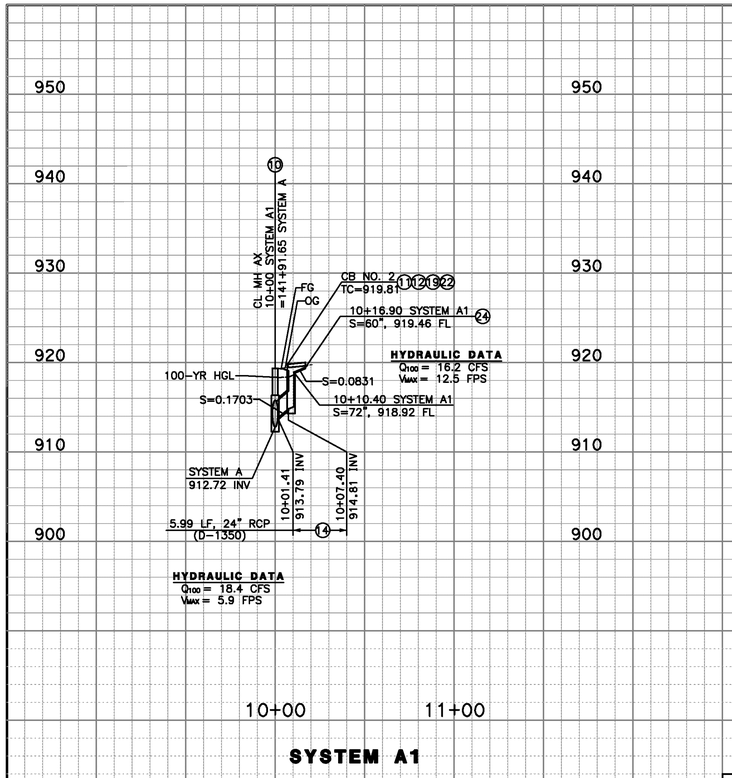

SYSTEM A1

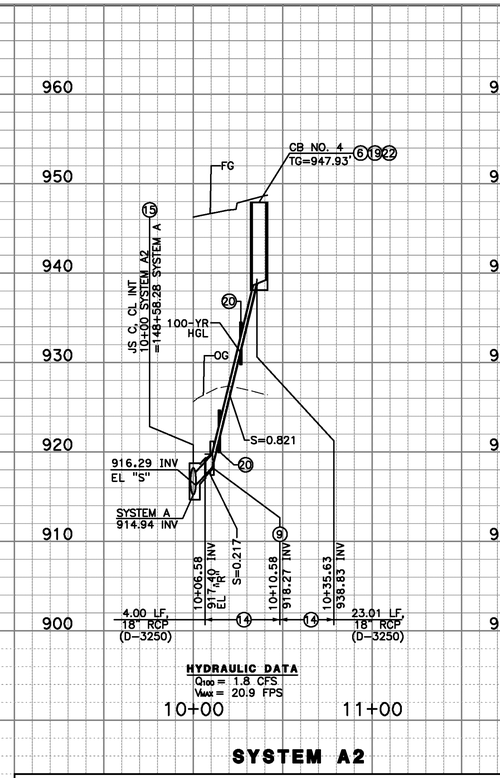

SYSTEM A2

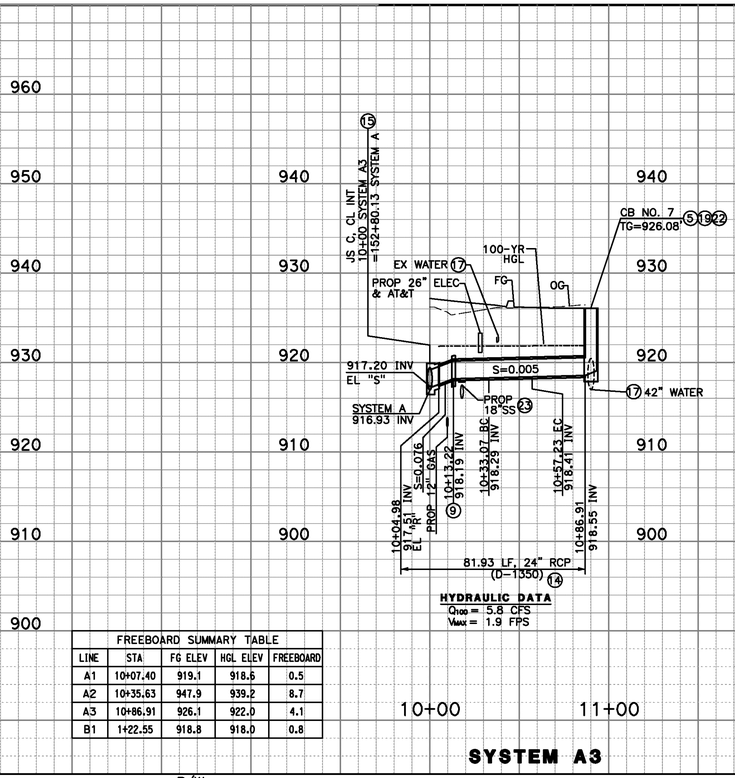

SYSTEM A3

FREEBOARD SUMMARY TABLE				
LINE	STA	FG ELEV	HGL ELEV	FREEBOARD
A1	10+07.40	919.1	918.6	0.5
A2	10+35.63	947.9	939.2	8.7
A3	10+86.91	926.1	922.0	4.1
B1	1+22.55	918.8	918.0	0.8

STORM DRAIN CONSTRUCTION NOTES

5. CONSTRUCT CATCH BASIN PER CITY OF RIVERSIDE STD. DETAIL NO. 406 W/ LOCAL DEPRESSION
6. CONSTRUCT CATCH BASIN PER CITY OF RIVERSIDE STD. DETAIL NO. 405 W/ LOCAL DEPRESSION.
9. CONSTRUCT CONCRETE COLLAR PER RCFC&WCD STD. DETAIL M803.
10. CONSTRUCT MANHOLE AX PER CITY OF RIVERSIDE STD. DETAIL NO. 430.
11. CONSTRUCT LOCAL DEPRESSION NO. 2 PER RCFC&WCD STD. DETAIL LD201. CASE AND "W" PER PLAN.
12. CONSTRUCT CATCH BASIN NO. 1 PER RCFC&WCD STD. DETAIL CB100. "W" AND "V" PER PLAN.
14. TRENCH BACKFILL PER CITY OF RIV STD. 453 AND CASE 1 PIPE BEDDING PER CITY STD. 452.
15. CONSTRUCT JUNCTION STRUCTURE C PER CITY OF RIVERSIDE STD. DETAIL NO. 422.
17. ABANDONED IN PLACE.
19. CONSTRUCT CB FILTER INSERT PER KRISTAR FLO-GUARD +PLUS, OR APPROVED EQUAL.
20. CONSTRUCT PIPE ANCHOR PER SPPWC STD 221-2.
21. CONSTRUCT FULL DEPTH SLURRY CEMENT BACKFILL PER DETAIL ON SHEET D-02.
22. CONSTRUCT DRAINAGE INLET STENCIL MARKER.
23. CONSTRUCT COMPRESSIBLE BLANKET PER SPPWC STD 225-2.
24. CONSTRUCT PARKWAY DRAIN PER DETAIL ON SHEET D-02.

LEGEND:

* CONTRACTOR TO VERIFY

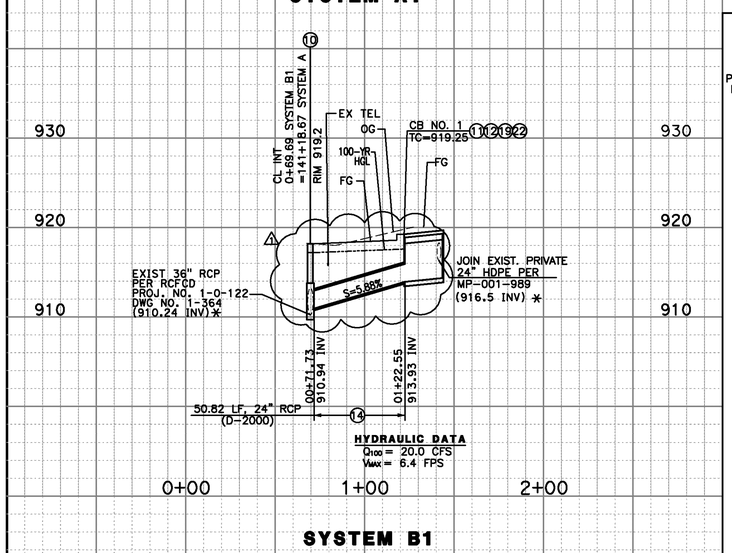

SYSTEM B1

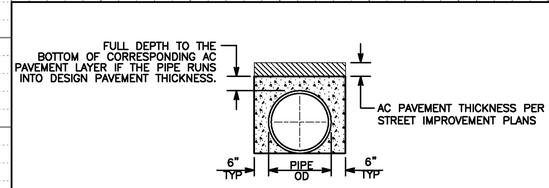

21 FULL DEPTH SLURRY CEMENT BACKFILL DETAIL
NO SCALE

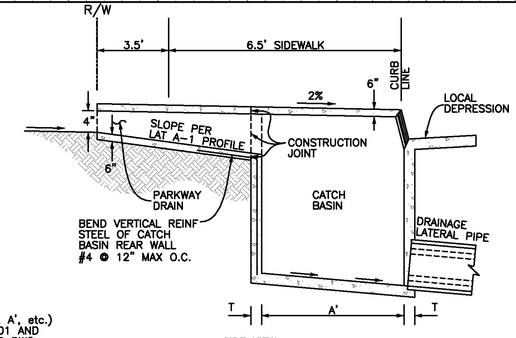

SIDE VIEW
NO SCALE

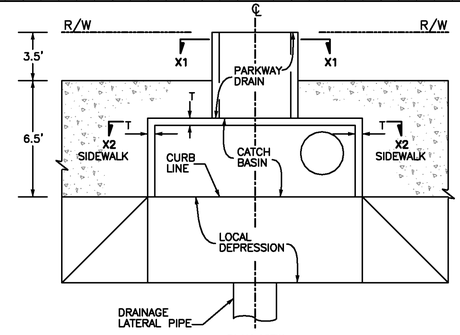

PLAN VIEW
NO SCALE

NOTE:

FOR ALL CATCH BASIN DETAILS (T, A', etc.) NOT SHOWN REFER TO SHEET D-01 AND CORRESPONDING RCFC & WCD STD DWG.

FOR REINF STEELS ADJACENT TO CONCRETE SURFACE, 1" MIN CLEARANCE SHALL BE MAINTAINED.

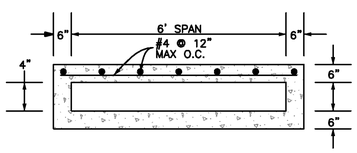

SECTION X1-X1
NO SCALE

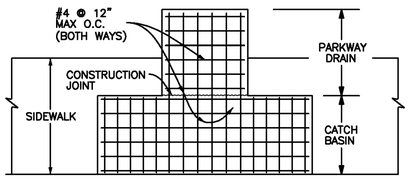

HORIZONTAL REINF STEEL CONFIGURATION
(TOP SLAB)
NO SCALE

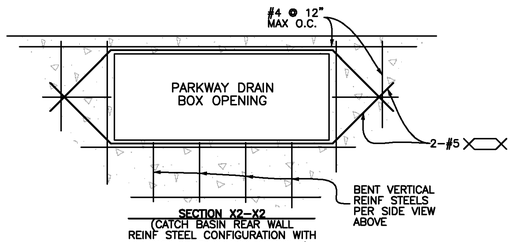

SECTION X2-X2
(CATCH BASIN REAR WALL
REINF STEEL CONFIGURATION WITH
PARKWAY DRAIN BOX OPENING)
NO SCALE

24 PARKWAY DRAIN
NO SCALE

REGISTERED PROFESSIONAL ENGINEER
ROBERT WONG
No. C-64734
Exp. 06/30/2015
CIVIL
STATE OF CALIFORNIA

AS-BUILT
08/01/14
NO AS-BUILT CHANGES

SCALE
HORIZ. : 1" = 40'
VERT. : 1" = 8'

Don't Dig...Until You Call U.S.A. Toll Free
1-800-227-2600
for the location of buried utility lines.
Don't disrupt vital services.
TWO WORKING DAYS BEFORE YOU DIG

PLANS PREPARED BY:
AECOM
901 VIA PIEMONTE, 5TH FLOOR
ONTARIO, CA 91764
(909) 579-3050

REGISTERED PROFESSIONAL ENGINEER
JAMES M FARRIER
No. C 45662
Exp. 12-12
CIVIL
STATE OF CALIFORNIA

MARK	REVISIONS	APPR	DATE
1 AS-BUILT	REVISED SYS B1 ADDED TOTAL SHEET COUNT		8/1/14

DESIGN BY RW DRAWN BY PM CHECKED BY RW

IOWA AVENUE
GRADE SEPARATION

STORM DRAIN PROFILES & DETAILS

DWG NO. D-864
D-02
SHEET 64 OF 133
SCALE: AS SHOWN

AS-BUILTS

GENERAL NOTES (ALL STAGES):

1. ALL CONFLICTING SIGNING, STRIPING AND PAVEMENT MARKINGS SHALL BE REMOVED PRIOR TO STARTING WORK ON EACH STAGE.
2. ALL STAGE CONSTRUCTION STRIPING SHALL BE PAINT (2 COATS), PAVEMENT MARKING SHALL USE TAPE, UNLESS OTHERWISE NOTED IN PLAN.
3. ALL CHEVRON AND DIAGONAL MARKINGS SHALL BE PLACED AT A 45° ANGLE TO THE EDGE OF TRAVEL WAY.
4. ALL TEMPORARY CRASH CUSHION SHALL HAVE TEMPORARY "P" MARKERS PLACED IN FRONT. ALL TEMPORARY RAILING (TYPE K) AND CONCRETE BARRIER (TYPE K) SHALL HAVE TEMPORARY "P" MARKERS PLACED IN FRONT AND AT ANGLE POINT.
5. THE DESCRIPTIVE TERM – 'JOIN' OR 'MATCH' WHEN USED ON THE PLANS REFERS TO THE JOINING OF STAGE CONSTRUCTION STRIPING WITH EXISTING, ULTIMATE OR PREVIOUS STAGE CONSTRUCTION DELINEATION UNLESS OTHERWISE NOTED.
6. ALL TEMPORARY RAILING (TYPE K) SHALL HAVE TRAFFIC SCREEN AND SCUPPERS; CONCRETE BARRIER (TYPE K) SHALL HAVE SCUPPERS, UNLESS OTHERWISE NOTED.
7. ALL CURBS, GUTTERS, MEDIANS, PAVEMENT, TRAFFIC STRIPING, MARKINGS AND SIGNS ETC. MODIFIED DURING STAGE CONSTRUCTION SHALL BE RESTORED TO THEIR ORIGINAL CONDITION AFTER THE CONSTRUCTION COMPLETES.
8. THE DESCRIPTIVE TERM – 'MAINTAIN ACCESS ALL THE TIME' WHEN USED ON PLANS REFERS TO ROAD WORK NEAR PRIVATE PROPERTY ENTRANCE/EXIT OR HAVING CONFLICT WITH THROUGH TRAFFIC ON THE STREET DURING THE SPECIFIC STAGE. WHEN CONSTRUCTED, CONTRACTOR SHALL MAINTAIN ACCESS TO THE PRIVATE PROPERTY OR TRAFFIC THROUGH CONSTRUCTION AREA AT ALL TIME AS DIRECTED BY THE ENGINEER.

GENERAL NOTES (ALL STAGES) – CONT'D:

9. CONTRACTOR SHALL SUBMIT DETAILED TRAFFIC CONTROL PLANS. THE TRAFFIC CONTROL PLANS SHALL BE APPROVED BY THE ENGINEER PRIOR TO CONSTRUCTION COMMENCEMENT OF EACH STAGE

TRAFFIC HANDLING NOTES: STAGE 1A

[A] ON IOWA AVE, E CITRUS & W CITRUS ST TRAFFIC REMAINS IN EXISTING PATTERNS.

CONSTRUCTION NOTES: STAGE 1A

(1) CONSTRUCT PORTION OF SEWER LINES (SEE UTILITY PLANS) WHERE THERE IS NOT A CONFLICT WITH TRAFFIC ON IOWA AVE, E CITRUS & W CITRUS ST.

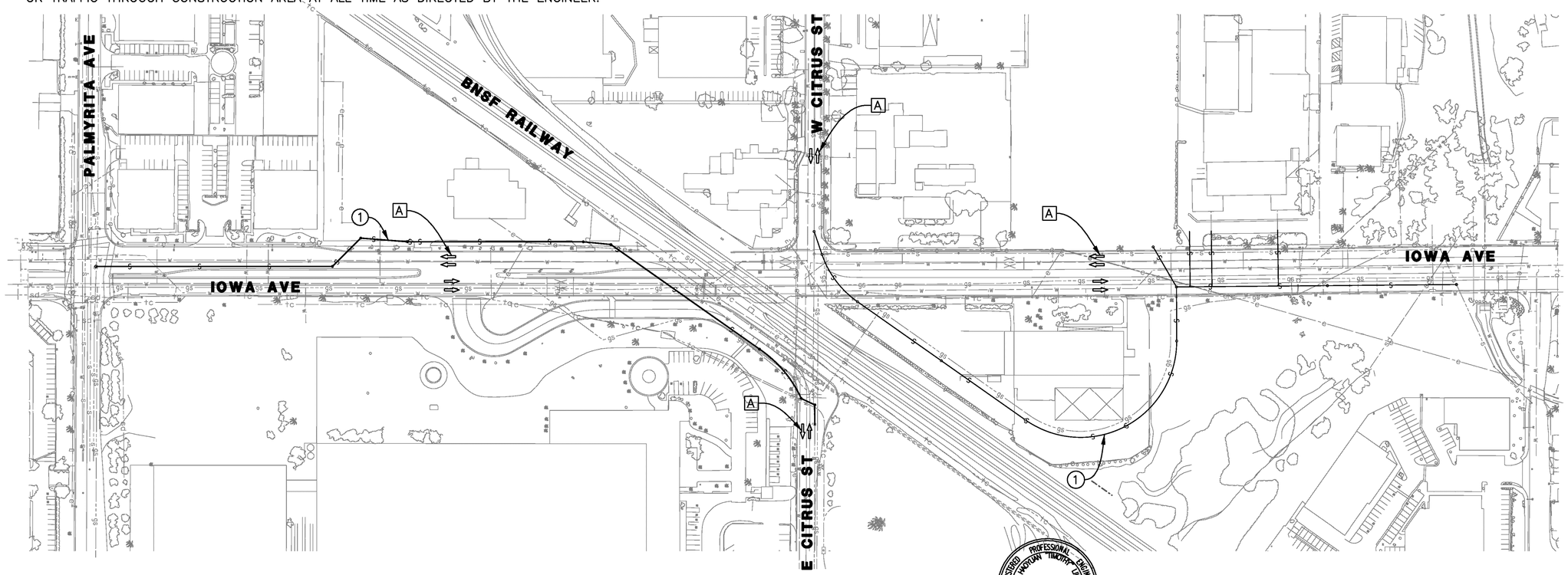

LEGEND

⇨ *TRAFFIC DIRECTION*

0 50 100 200 300 400
SCALE: 1"=100'

REGISTERED PROFESSIONAL ENGINEER HAOYUAN TIMOTHY LIU No. C-75045 Exp. 12/31/2015 CIVIL STATE OF CALIFORNIA

AS-BUILT
08/01/14

Don't Dig...Until You Call U.S.A. Toll Free
1-800-227-2600
for the location of buried utility lines.
Don't disrupt vital services.
TWO WORKING DAYS BEFORE YOU DIG

PLANS PREPARED BY:
AECOM
901 VIA PIEMONTE, 5TH FLOOR
ONTARIO, CA 91764
(909) 579-3050

REGISTERED PROFESSIONAL ENGINEER JAMES M FARRAR No. C-65662 Exp. 12-2 CIVIL STATE OF CALIFORNIA

MARK	REVISIONS	APPR	DATE
AS-BUILT	ADDED TOTAL SHEET COUNT		8/1/14

DESIGN BY TL DRAWN BY TL CHECKED BY BMS

IOWA AVENUE
GRADE SEPARATION

STAGE CONSTRUCTION
STAGE 1A

DWG NO. R-4237
SC-01
SHEET 65 OF 133
SCALE: AS SHOWN

AS-BUILTS

GENERAL NOTES (ALL STAGES):

1. ALL CONFLICTING SIGNING, STRIPING AND PAVEMENT MARKINGS SHALL BE REMOVED PRIOR TO STARTING WORK ON EACH STAGE.
2. ALL STAGE CONSTRUCTION STRIPING SHALL BE PAINT (2 COATS), PAVEMENT MARKING SHALL USE TAPE, UNLESS OTHERWISE NOTED IN PLAN.
3. ALL CHEVRON AND DIAGONAL MARKINGS SHALL BE PLACED AT A 45° ANGLE TO THE EDGE OF TRAVEL WAY.
4. ALL TEMPORARY CRASH CUSHION SHALL HAVE TEMPORARY "P" MARKERS PLACED IN FRONT. ALL TEMPORARY RAILING (TYPE K) AND CONCRETE BARRIER (TYPE K) SHALL HAVE TEMPORARY "P" MARKERS PLACED IN FRONT AND AT ANGLE POINT.
5. THE DESCRIPTIVE TERM – 'JOIN' OR 'MATCH' WHEN USED ON THE PLANS REFERS TO THE JOINING OF STAGE CONSTRUCTION STRIPING WITH EXISTING, ULTIMATE OR PREVIOUS STAGE CONSTRUCTION DELINEATION UNLESS OTHERWISE NOTED.
6. ALL TEMPORARY RAILING (TYPE K) SHALL HAVE TRAFFIC SCREEN AND SCUPPERS; CONCRETE BARRIER (TYPE K) SHALL HAVE SCUPPERS, UNLESS OTHERWISE NOTED.
7. ALL CURBS, GUTTERS, MEDIANS, PAVEMENT, TRAFFIC STRIPING, MARKINGS AND SIGNS ETC. MODIFIED DURING STAGE CONSTRUCTION SHALL BE RESTORED TO THEIR ORIGINAL CONDITION AFTER THE CONSTRUCTION COMPLETES.
8. THE DESCRIPTIVE TERM – 'MAINTAIN ACCESS ALL THE TIME' WHEN USED ON PLANS REFERS TO ROAD WORK NEAR PRIVATE PROPERTY ENTRANCE/EXIT OR HAVING CONFLICT WITH THROUGH TRAFFIC ON THE STREET DURING THE SPECIFIC STAGE. WHEN CONSTRUCTED, CONTRACTOR SHALL MAINTAIN ACCESS TO THE PRIVATE PROPERTY OR TRAFFIC THROUGH CONSTRUCTION AREA AT ALL TIME AS DIRECTED BY THE ENGINEER.
9. CONTRACTOR SHALL SUBMIT DETAILED TRAFFIC CONTROL PLANS. THE TRAFFIC CONTROL PLANS SHALL BE APPROVED BY THE ENGINEER PRIOR TO CONSTRUCTION COMMENCEMENT OF EACH STAGE.

TRAFFIC HANDLING NOTES: STAGE 1B

- [A] IOWA AVE CLOSED TO THRU TRAFFIC, OPEN TO LOCAL TRAFFIC ONLY.
- [B] W CITRUS ST CLOSED AT IOWA AVE.
- [C] E CITRUS ST CLOSED TO/FROM IOWA AVE.
- [D] PROVIDE LEFT TURN ACCESS TO THE EXISTING DRIVEWAY.

CONSTRUCTION NOTES: STAGE 1B

1. FIRST ORDER OF WORK: DEMOLISH PORTION OF MEDIAN ISLAND AND CONSTRUCT TEMPORARY PAVEMENT.
2. FIRST ORDER OF WORK: CONSTRUCT THE DRIVEWAY AND IMPROVEMENTS. REMOVE ENTIRE PLANTER. MAINTAIN PROPERTY ACCESS AT ALL TIME.
3. FIRST ORDER OF WORK: CONSTRUCT REMAINDER OF SEWER LINE.
4. FIRST ORDER OF WORK: RELOCATE WATER SERVICE LATERAL BY CITY'S FORCE.
5. CONSTRUCT TEMPORARY PAVEMENT AS SMOOTH TRANSITION BETWEEN PROPOSED IMPROVEMENTS AND ORIGINAL GROUND. MAINTAIN ACCESS ALL THE TIME.
6. CONSTRUCT BRIDGE FOOTINGS, SUB–STRUCTURES AND ERECT FALSEWORK FOR THE BRIDGE SUPERSTRUCTURE.
7. CONSTRUCT PORTION OF E CITRUS ST AND PENHALL ACCESS ROAD.
8. CONSTRUCT ENTIRE W CITRUS ST.
9. CONSTRUCT TEMPORARY PAVEMENT.
10. CONSTRUCT PORTION OF IMPROVEMENTS ON EAST HALF OF IOWA AVE NORTH OF W CITRUS.

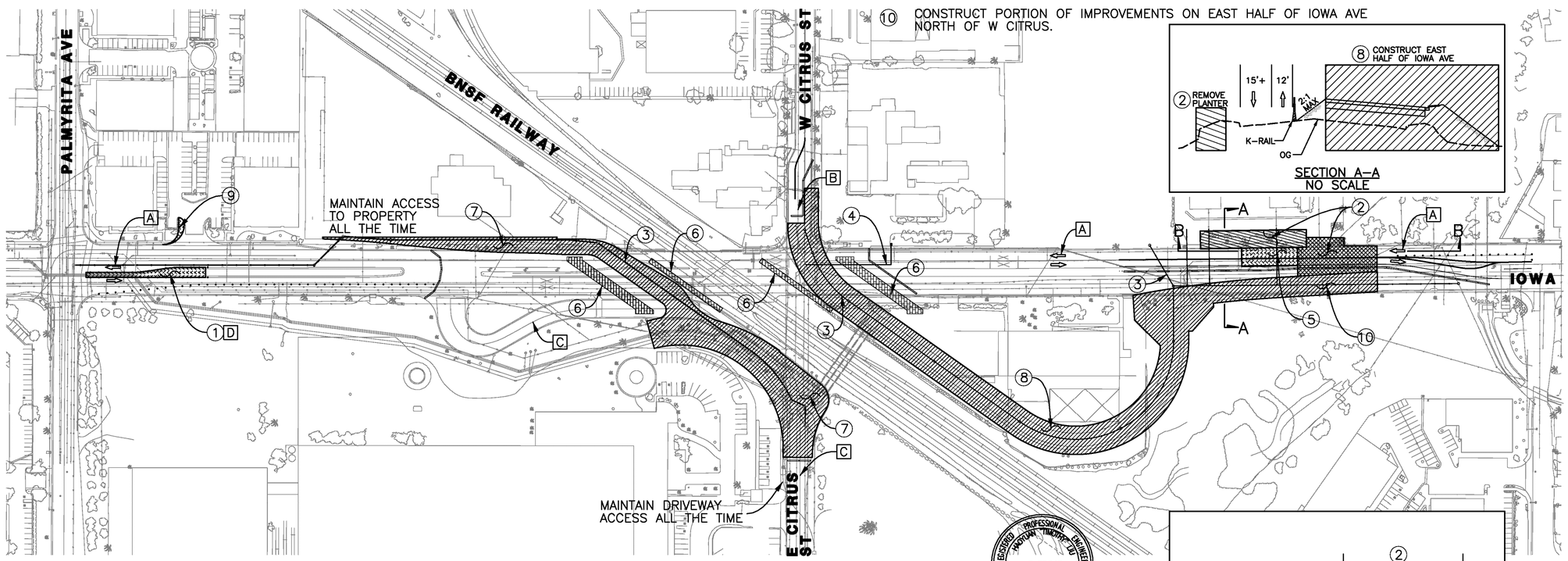

SECTION A–A
NO SCALE

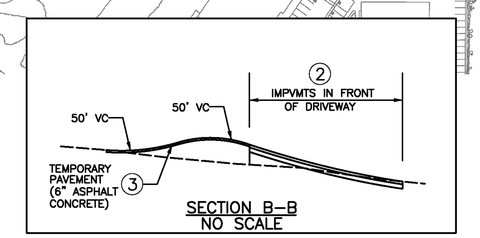

SECTION B–B
NO SCALE

LEGEND

- UNDER CONSTRUCTION THIS STAGE (FIRST ORDER OF WORK)
- UNDER CONSTRUCTION THIS STAGE
- UNDER CONSTRUCTION THIS STAGE (TEMPORARY PAVEMENT)
- UNDER CONSTRUCTION THIS STAGE (BRIDGE)
- TRAFFIC DIRECTION
- TEMPORARY RAILING (TYPE K)
- CHANNELIZERS

0 50 100 200 300 400
SCALE: 1"=100'

REGISTERED PROFESSIONAL ENGINEER HAOYUAN TIMOTHY LIU No. C-75045 Exp. 12/31/2015 CIVIL STATE OF CALIFORNIA

AS-BUILT 08/01/14

Don't Dig...Until You Call U.S.A. Toll Free 1-800-227-2600 for the location of buried utility lines. Don't disrupt vital services.
TWO WORKING DAYS BEFORE YOU DIG

PLANS PREPARED BY:
AECOM
901 VIA PIEMONTE, 5TH FLOOR
ONTARIO, CA 91764
(909) 579-3050

REGISTERED PROFESSIONAL ENGINEER JAMES M FARRIER No. C 45561 Exp. 12-12 CIVIL STATE OF CALIFORNIA

MARK	REVISIONS	APPR	DATE
AS-BUILT	ADDED TOTAL SHEET COUNT		8/1/14

DESIGN BY TL DRAWN BY TL CHECKED BY BMS

IOWA AVENUE
GRADE SEPARATION
STAGE CONSTRUCTION STAGE 1B

DWG NO. R–4237
SC-02
SHEET 66 OF 133
SCALE: AS SHOWN

AS–BUILTS

GENERAL NOTES (ALL STAGES):

1. ALL CONFLICTING SIGNING, STRIPING AND PAVEMENT MARKINGS SHALL BE REMOVED PRIOR TO STARTING WORK ON EACH STAGE.
2. ALL STAGE CONSTRUCTION STRIPING SHALL BE PAINT (2 COATS), PAVEMENT MARKING SHALL USE TAPE, UNLESS OTHERWISE NOTED IN PLAN.
3. ALL CHEVRON AND DIAGONAL MARKINGS SHALL BE PLACED AT A 45° ANGLE TO THE EDGE OF TRAVEL WAY.
4. ALL TEMPORARY CRASH CUSHION SHALL HAVE TEMPORARY "P" MARKERS PLACED IN FRONT. ALL TEMPORARY RAILING (TYPE K) AND CONCRETE BARRIER (TYPE K) SHALL HAVE TEMPORARY "P" MARKERS PLACED IN FRONT AND AT ANGLE POINT.
5. THE DESCRIPTIVE TERM – 'JOIN' OR 'MATCH' WHEN USED ON THE PLANS REFERS TO THE JOINING OF STAGE CONSTRUCTION STRIPING WITH EXISTING, ULTIMATE OR PREVIOUS STAGE CONSTRUCTION DELINEATION UNLESS OTHERWISE NOTED.
6. ALL TEMPORARY RAILING (TYPE K) SHALL HAVE TRAFFIC SCREEN AND SCUPPERS; CONCRETE BARRIER (TYPE K) SHALL HAVE SCUPPERS, UNLESS OTHERWISE NOTED.
7. ALL CURBS, GUTTERS, MEDIANS, PAVEMENT, TRAFFIC STRIPING, MARKINGS AND SIGNS ETC. MODIFIED DURING STAGE CONSTRUCTION SHALL BE RESTORED TO THEIR ORIGINAL CONDITION AFTER THE CONSTRUCTION COMPLETES.
8. THE DESCRIPTIVE TERM – 'MAINTAIN ACCESS ALL THE TIME' WHEN USED ON PLANS REFERS TO ROAD WORK NEAR PRIVATE PROPERTY ENTRANCE/EXIT OR HAVING CONFLICT WITH THROUGH TRAFFIC ON THE STREET DURING THE SPECIFIC STAGE. WHEN CONSTRUCTED, CONTRACTOR SHALL MAINTAIN ACCESS TO THE PRIVATE PROPERTY OR TRAFFIC THROUGH CONSTRUCTION AREA AT ALL TIME AS DIRECTED BY THE ENGINEER.
9. CONTRACTOR SHALL SUBMIT DETAILED TRAFFIC CONTROL PLANS. THE TRAFFIC CONTROL PLANS SHALL BE APPROVED BY THE ENGINEER PRIOR TO CONSTRUCTION COMMENCEMENT OF EACH STAGE.

TRAFFIC HANDLING NOTES: STAGE 2A

- [A] THRU TRAFFIC ON IOWA AVE REDUCED TO ONE LANE EACH DIRECTION AND CONNECTED TO FINISHED W CITRUS ST ONLY.
- [B] IOWA AVE CLOSED TO THRU TRAFFIC TRAFFIC, OPEN TO LOCAL PROPERTY ACCESS ONLY.
- [C] E CITRUS ST CLOSED TO TRAFFIC TO/FROM IOWA AVE. PROPERTY ACCESS THROUGH ACCESS ROAD ONLY.
- [D] ENTIRE W CITRUS ST OPEN TO TRAFFIC AND CONNECTED TO IOWA AVE NORTH OF OVERHEAD ONLY.

CONSTRUCTION NOTES: STAGE 2A

1. CONSTRUCT BRIDGE SUPERSTRUCTURE.
2. CONSTRUCT REMAINDER OF E CITRUS ST.
3. CONSTRUCT PORTION OF IMPROVEMENTS ON SOUTH OF OVERHEAD.
4. CONSTRUCT REMAINDER OF IMPROVEMENTS ON NORTH OF OVERHEAD.
5. CONSTRUCT GAS LINE (BY OTHERS).
6. CONSTRUCT TEMPORARY PAVEMENT.

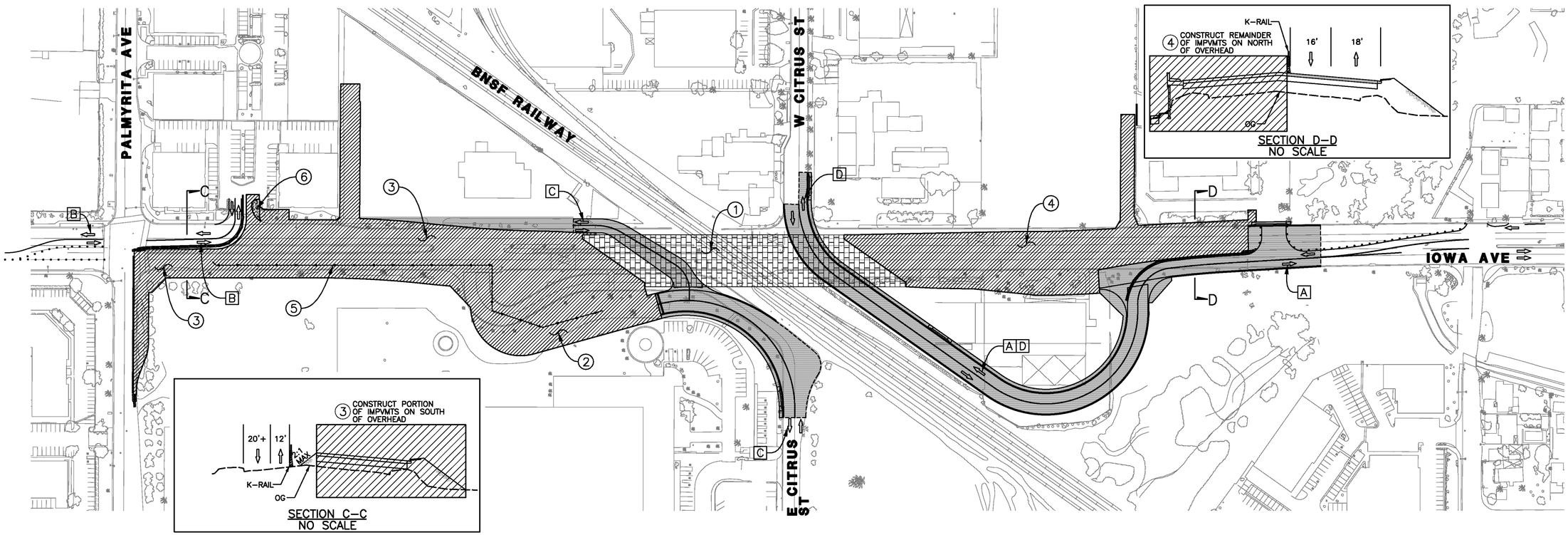

0 50 100 200 300 400
SCALE: 1"=100'

LEGEND

- UNDER CONSTRUCTION THIS STAGE
- UNDER CONSTRUCTION THIS STAGE (TEMPORARY PAVEMENT)
- UNDER CONSTRUCTION THIS STAGE (BRIDGE)
- NEW PAVEMENT FROM PREVIOUS STAGE AT ITS ULTIMATE CONDITION
- TEMPORARY PAVEMENT FROM PREVIOUS STAGE
- ROADWORK COMPLETED FROM PREVIOUS STAGE
- TRAFFIC DIRECTION
- TEMPORARY RAILING (TYPE K)
- CHANNELIZERS
- TEMPORARY CRASH CUSHION

REGISTERED PROFESSIONAL ENGINEER HAOYUAN "TIMOTHY" DU No. C-75045 Exp. 12/31/2015 CIVIL STATE OF CALIFORNIA

AS-BUILT 08/01/14

Don't Dig...Until You Call U.S.A. Toll Free 1-800-227-2600 for the location of buried utility lines. Don't disrupt vital services. TWO WORKING DAYS BEFORE YOU DIG

PLANS PREPARED BY:
AECOM
901 VIA PIEMONTE, 5TH FLOOR
ONTARIO, CA 91764
(909) 579-3050

REGISTERED PROFESSIONAL ENGINEER JAMES M FARRIS No. C 45664 Exp. 12-12 CIVIL STATE OF CALIFORNIA

MARK	REVISIONS	APPR	DATE
AS-BUILT	ADDED TOTAL SHEET COUNT		8/1/14

DESIGN BY TL DRAWN BY TL CHECKED BY BMS

IOWA AVENUE
GRADE SEPARATION
STAGE CONSTRUCTION
STAGE 2A

DWG NO. R–4237
SC-03
SHEET 67 OF 133
SCALE: AS SHOWN

AS–BUILTS

GENERAL NOTES (ALL STAGES):

1. ALL CONFLICTING SIGNING, STRIPING AND PAVEMENT MARKINGS SHALL BE REMOVED PRIOR TO STARTING WORK ON EACH STAGE.
2. ALL STAGE CONSTRUCTION STRIPING SHALL BE PAINT (2 COATS), PAVEMENT MARKING SHALL USE TAPE, UNLESS OTHERWISE NOTED IN PLAN.
3. ALL CHEVRON AND DIAGONAL MARKINGS SHALL BE PLACED AT A 45° ANGLE TO THE EDGE OF TRAVEL WAY.
4. ALL TEMPORARY CRASH CUSHION SHALL HAVE TEMPORARY "P" MARKERS PLACED IN FRONT. ALL TEMPORARY RAILING (TYPE K) AND CONCRETE BARRIER (TYPE K) SHALL HAVE TEMPORARY "P" MARKERS PLACED IN FRONT AND AT ANGLE POINT.
5. THE DESCRIPTIVE TERM – 'JOIN' OR 'MATCH' WHEN USED ON THE PLANS REFERS TO THE JOINING OF STAGE CONSTRUCTION STRIPING WITH EXISTING, ULTIMATE OR PREVIOUS STAGE CONSTRUCTION DELINEATION UNLESS OTHERWISE NOTED.
6. ALL TEMPORARY RAILING (TYPE K) SHALL HAVE TRAFFIC SCREEN AND SCUPPERS; CONCRETE BARRIER (TYPE K) SHALL HAVE SCUPPERS, UNLESS OTHERWISE NOTED.
7. ALL CURBS, GUTTERS, MEDIANS, PAVEMENT, TRAFFIC STRIPING, MARKINGS AND SIGNS ETC. MODIFIED DURING STAGE CONSTRUCTION SHALL BE RESTORED TO THEIR ORIGINAL CONDITION AFTER THE CONSTRUCTION COMPLETES.
8. THE DESCRIPTIVE TERM – 'MAINTAIN ACCESS ALL THE TIME' WHEN USED ON PLANS REFERS TO ROAD WORK NEAR PRIVATE PROPERTY ENTRANCE/EXIT OR HAVING CONFLICT WITH THROUGH TRAFFIC ON THE STREET DURING THE SPECIFIC STAGE. WHEN CONSTRUCTED, CONTRACTOR SHALL MAINTAIN ACCESS TO THE PRIVATE PROPERTY OR TRAFFIC THROUGH CONSTRUCTION AREA AT ALL TIME AS DIRECTED BY THE ENGINEER.
9. CONTRACTOR SHALL SUBMIT DETAILED TRAFFIC CONTROL PLANS. THE TRAFFIC CONTROL PLANS SHALL BE APPROVED BY THE ENGINEER PRIOR TO CONSTRUCTION COMMENCEMENT OF EACH STAGE.

TRAFFIC HANDLING NOTES: STAGE 2A

- [A] THRU TRAFFIC ON IOWA AVE REDUCED TO ONE LANE EACH DIRECTION AND CONNECTED TO FINISHED W CITRUS ST ONLY.
- [B] THRU TRAFFIC ON IOWA AVE REDUCED TO ONE LANE EACH DIRECTION AND CONNECTED TO FINISHED E CITRUS ST ONLY. PROPERTY ACCESS GRANTED.
- [C] ENTIRE E CITRUS ST OPEN TO TRAFFIC AND CONNECTED TO IOWA AVE SOUTH OF OVERHEAD ONLY. PROPERTY ACCESS GRANTED.
- [D] ENTIRE W CITRUS ST OPEN TO TRAFFIC AND CONNECTED TO IOWA AVE NORTH OF OVERHEAD ONLY.

CONSTRUCTION NOTES: STAGE 2A

1. BRIDGE SUPERSTRUCTURE CONSTRUCTION CONTINUED.
2. CONSTRUCT REMAINDER OF THE IMPROVEMENTS ON IOWA AVE.

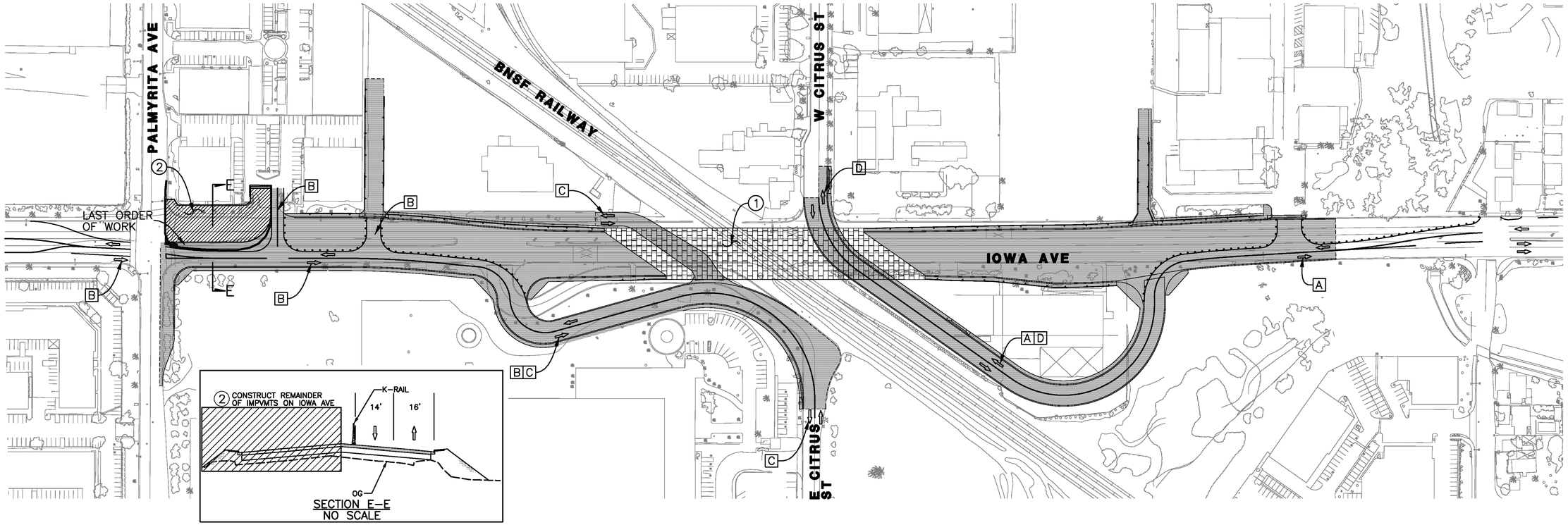

0 50 100 200 300 400
SCALE: 1"=100'

LEGEND

- UNDER CONSTRUCTION THIS STAGE
- UNDER CONSTRUCTION THIS STAGE (BRIDGE)
- NEW PAVEMENT FROM PREVIOUS STAGE AT ITS ULTIMATE CONDITION
- TEMPORARY PAVEMENT FROM PREVIOUS STAGE
- ROADWORK COMPLETED FROM PREVIOUS STAGE
- TRAFFIC DIRECTION
- TEMPORARY RAILING (TYPE K)
- CHANNELIZERS
- TEMPORARY CRASH CUSHION

REGISTERED PROFESSIONAL ENGINEER HOFFMAN TIMOTHY LU No. C-75045 Exp. 12/31/2015 CIVIL STATE OF CALIFORNIA

AS-BUILT 08/01/14

Don't Dig...Until You Call U.S.A. Toll Free 1-800-227-2600 for the location of buried utility lines. Don't disrupt vital services. TWO WORKING DAYS BEFORE YOU DIG

PLANS PREPARED BY:
AECOM
901 VIA PIEMONTE, 5TH FLOOR
ONTARIO, CA 91764
(909) 579-3050

REGISTERED PROFESSIONAL ENGINEER JAMES M FARRAR No. C 65593 Exp. 12-2 CIVIL STATE OF CALIFORNIA

MARK	REVISIONS	APPR	DATE
AS-BUILT	ADDED TOTAL SHEET COUNT		8/1/14

DESIGN BY TL DRAWN BY TL CHECKED BY BMS

IOWA AVENUE
GRADE SEPARATION
STAGE CONSTRUCTION
STAGE 2B

DWG NO. R-4237
SC-04
SHEET 68 OF 133
SCALE: AS SHOWN

AS-BUILTS

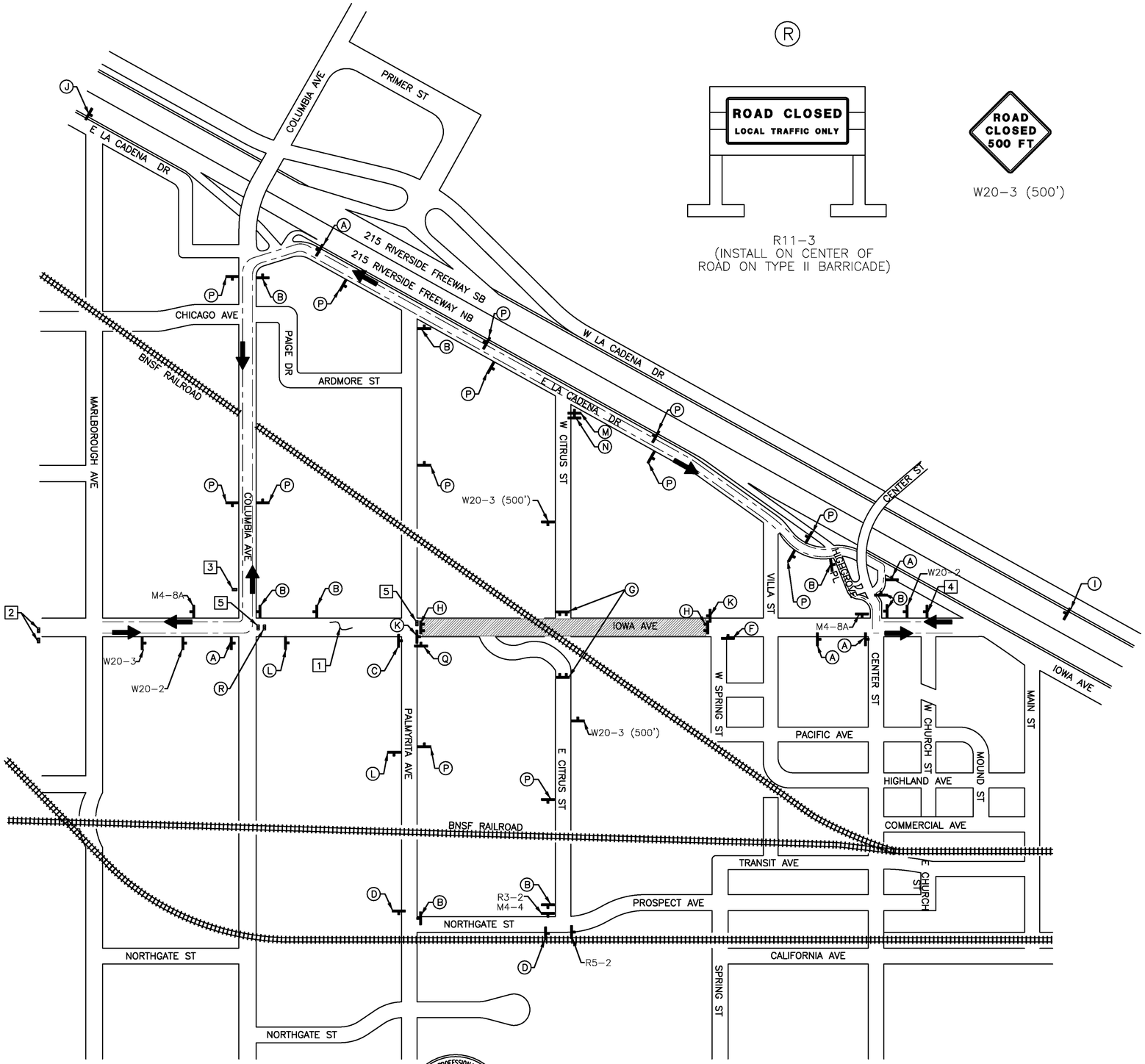

TRAFFIC CONTROLS GENERAL NOTES

1. ADJUSTMENT TO THE DETAILS OF THESE TRAFFIC CONTROL PLANS AND REQUIREMENTS MAY BE NECESSARY DUE TO CONSTRUCTION ACTIVITIES, AS DIRECTED BY THE ENGINEER.
2. ALL EXISTING SIGNS IN CONFLICT WITH THE CONSTRUCTION SIGNS SHALL BE REMOVED, RELOCATED OR COVERED IN PLACE, AS DIRECTED BY THE ENGINEER. THE CONTRACTOR SHALL STORE AND REINSTALL ITEMS WHICH HAVE BEEN REMOVED OR RELOCATED IN A MANNER APPROVED BY THE ENGINEER.
3. ALL CONSTRUCTION SIGNS SHALL BE IN CONFORMANCE WITH THE 2010 CALIFORNIA MUTCD STANDARD AND SHALL HAVE BLACK LETTERS ON AN ORANGE BACKGROUND WITH HIGH INTENSITY (FHWA TYPE III) REFLECTIVE SHEETING, EXCEPT AS OTHERWISE NOTED.
4. SIGN MOUNTING HEIGHT IS A MINIMUM OF SEVEN FEET AS MEASURED FROM THE BOTTOM OF THE SIGN TO THE NEAR EDGE OF THE PAVEMENT OR TOP OF CURB. FOR SIGNS INSTALLED ON SPRING OR RIGID STANDS, SIGN MOUNTING HEIGHT IS A MINIMUM OF 1 FOOT ABOVE THE PAVEMENT.
5. FLAGS SHALL BE MOUNTED ON TOP OF ALL CONSTRUCTION SIGNS EXCEPT THE "END ROAD WORK" SIGN.
6. ALL DRAWINGS ARE SCHEMATIC ONLY AND NOT TO SCALE.
7. ALL SIGN LOCATIONS ARE APPROXIMATE. EXACT LOCATION WILL BE DETERMINED BY ENGINEER.
8. ALL PLACEMENTS OF TEMPORARY TRAFFIC CONTROL DEVICES SHALL BE IN CONFORMANCE WITH THE 2010 CALIFORNIA MUTCD STANDARD.

TRAFFIC HANDLING NOTES

1. CONTRACTOR SHALL SUBMIT TRAFFIC CONTROL PLAN TO THE CITY FOR APPROVAL PRIOR TO CONSTRUCTION, IF HE PROPOSES ANY CHANGES TO THE TRAFFIC CONTROL PLAN PROVIDED.
2. CONTRACTOR SHALL PROVIDE PEDESTRIAN ACCESS TO ALL BUSINESS DURING NORMAL BUSINESS OPERATING HOURS.

CONSTRUCTION NOTES:

1. CONTRACTOR SHALL PROVIDE A DETAILED TRAFFIC CONTROL PLAN SHOWING THE NORTHBOUND THRU LANES MERGING ONTO THE DEDICATED LEFT-TURN LANE AT PALMYRITA AVE.
2. CONTRACTOR SHALL INSTALL 2 CHANGEABLE MESSAGE SIGNS. ONE ON MEDIAN AND ONE ON SIDE OF THE ROAD THAT READ:

MESSAGE #1	MESSAGE #2	MESSAGE #3
IOWA AVE CLOSED XX/XX/20XX TO XX/XX/20XX	DETOUR VIA COLUMBIA AVE	EXPECT DELAYS

3. CONTRACTOR SHALL INSTALL CHANGEABLE MESSAGE SIGN THAT READS:

MESSAGE #1	MESSAGE #2	MESSAGE #3
IOWA AVE CLOSED AT PALMYRITA	XX/XX/20XX TO XX/XX/20XX	USE ALT ROUTE

4. CONTRACTOR SHALL INSTALL CHANGEABLE MESSAGE SIGN THAT READS:

MESSAGE #1	MESSAGE #2	MESSAGE #3
IOWA AVE CLOSED XX/XX/20XX TO XX/XX/20XX	DETOUR VIA CENTER ST	EXPECT DELAYS

5. CONTRACTOR SHALL INSTALL M4-10 (LT) SIGN ON SIGNAL MAST ARM FOR NORTHBOUND DIRECTION.

LEGEND:

- TEMPORARY CONSTRUCTION SIGN
- TYPE III BARRICADE
- TRAFFIC DIRECTION
- PORTION OF IOWA AVE CLOSED TO THROUGH TRAFFIC (LOCAL ACCESS ONLY)
- (X) INSTALL SIGNS ON POST OR BARRICADE PER THE DETAIL SHOWN ON SHEET DE-02

REGISTERED PROFESSIONAL ENGINEER HOFFMAN TIMOTHY LEE No. C-75045 Exp. 12/31/2015 CIVIL STATE OF CALIFORNIA

AS-BUILT 08/01/14

Don't Dig...Until You Call U.S.A. Toll Free 1-800-227-2600 for the location of buried utility lines. Don't disrupt vital services. TWO WORKING DAYS BEFORE YOU DIG

PLANS PREPARED BY:
AECOM
901 VIA PIEMONTE, 5TH FLOOR
ONTARIO, CA 91764
(909) 579-3050

REGISTERED PROFESSIONAL ENGINEER JAMES M. FARRAR No. C 45658 Exp. 12-12 CIVIL STATE OF CALIFORNIA

MARK	REVISIONS	APPR	DATE
AS-BUILT	ADDED TOTAL SHEET COUNT		8/1/14

DESIGN BY MO DRAWN BY MO CHECKED BY BMS

IOWA AVENUE
GRADE SEPARATION

DETOUR: FULL CLOSURE

DWG NO. R-4237
DE-01
SHEET 69 OF 133

SCALE: AS SHOWN

AS-BUILTS

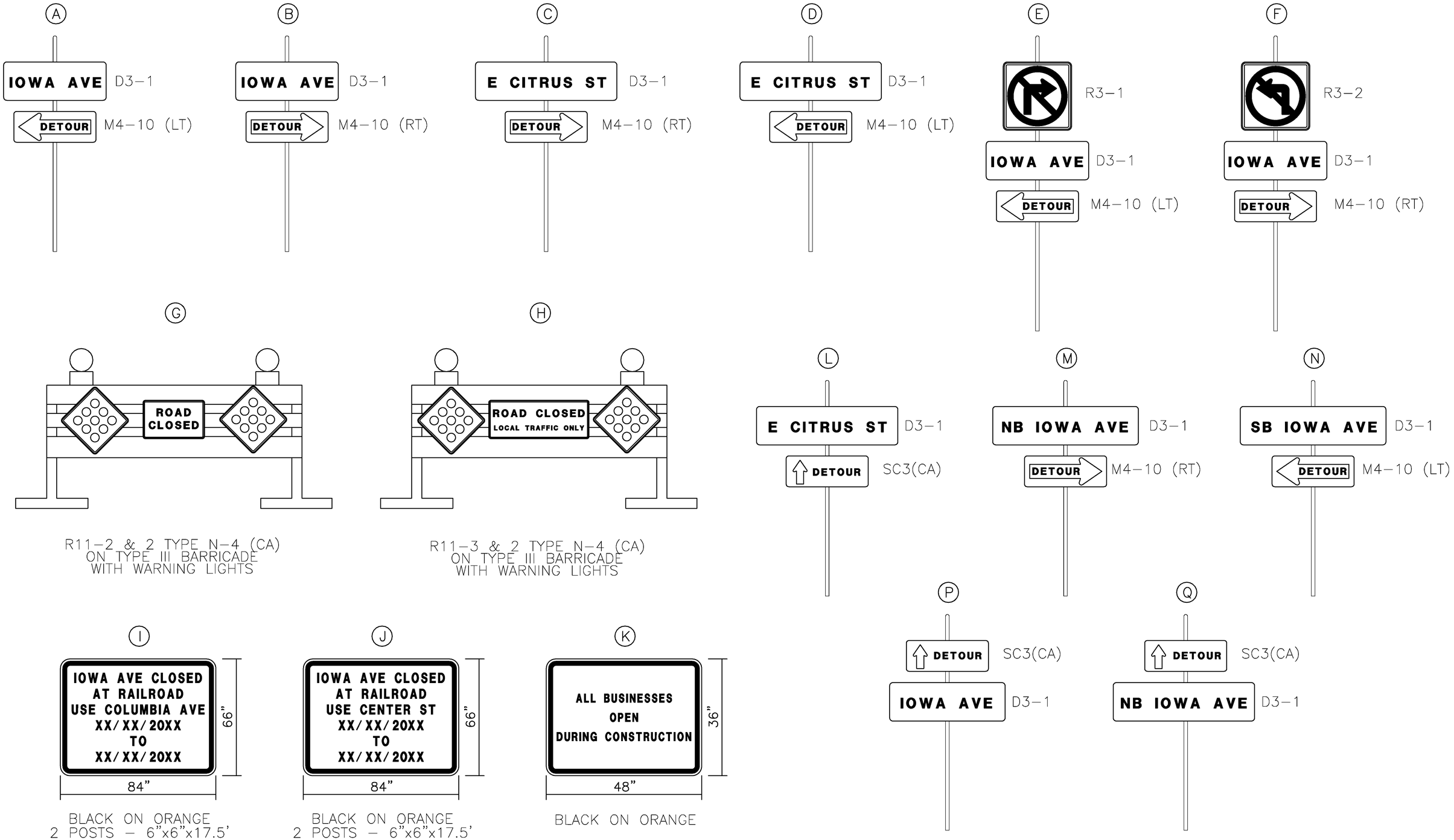

REGISTERED PROFESSIONAL ENGINEER HAOYUAN "TIMOTHY" DU No. C-75045 Exp. 12/31/2015 CIVIL STATE OF CALIFORNIA

AS-BUILT 08/01/14

Don't Dig...Until You Call U.S.A. Toll Free 1-800-227-2600 for the location of buried utility lines. Don't disrupt vital services.

TWO WORKING DAYS BEFORE YOU DIG

PLANS PREPARED BY:
AECOM
901 VIA PIEMONTE, 5TH FLOOR
ONTARIO, CA 91764
(909) 579-3050

REGISTERED PROFESSIONAL ENGINEER JAMES M. FARRAR No. C 45668 Exp. 12-12 CIVIL STATE OF CALIFORNIA

MARK	REVISIONS	APPR	DATE
AS-BUILT	ADDED TOTAL SHEET COUNT		8/1/14

DESIGN BY MO DRAWN BY MO CHECKED BY BMS

IOWA AVENUE
GRADE SEPARATION

DETOUR SIGN DETAILS

DWG NO. R-4237
DE-02
SHEET 71 OF 133

SCALE: AS SHOWN

AS-BUILTS

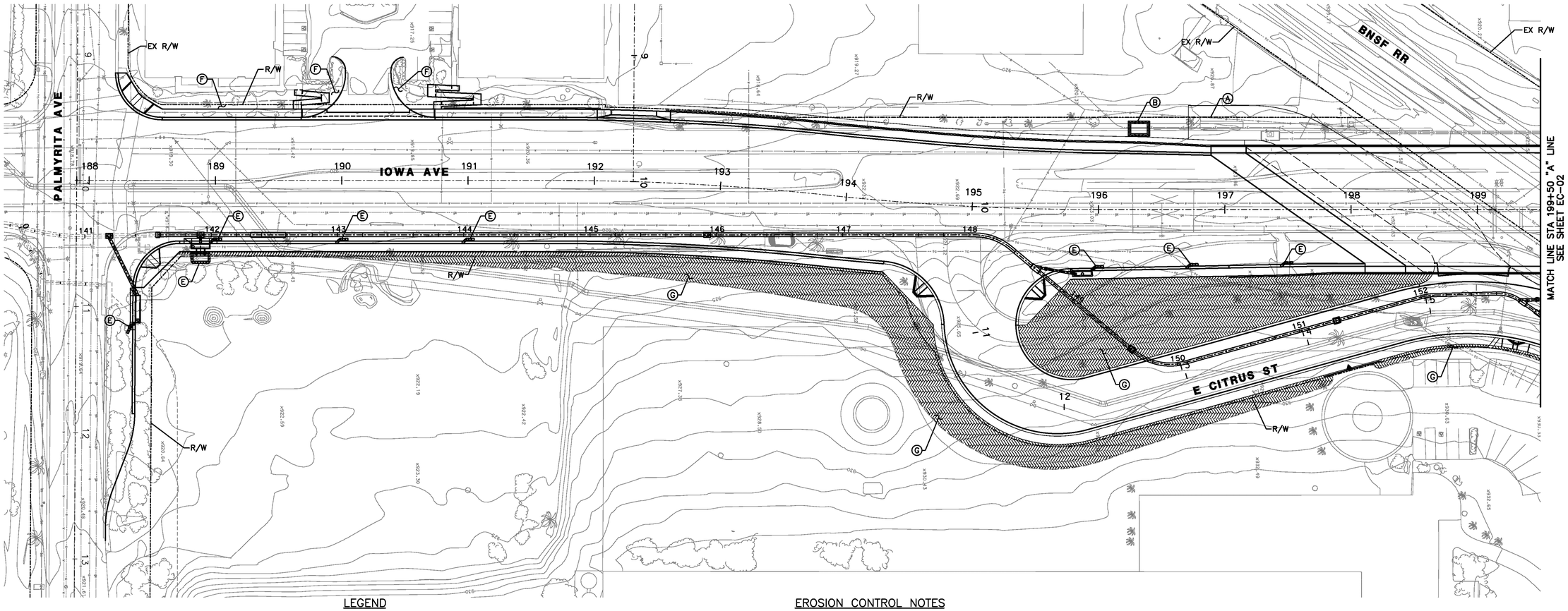

LEGEND

- GRAVEL BAG BERM
- FIBER ROLL
- HYDROSEED
- STABILIZED CONSTRUCTION ENTRANCE/EXIT
- PROPOSED LANDSCAPE

EROSION CONTROL NOTES

(A) CONSTRUCT TC-1 STABILIZED CONSTRUCTION ENTRANCE/EXIT PER 2009 CASQA BMP HANDBOOK

(B) CONSTRUCT WM-8 TEMPORARY CONCRETE WASHOUT FACILITY PER 2009 CASQA BMP HANDBOOK

(C) CONSTRUCT EC-4 HYDROSEEDING PER 2009 CASQA BMP HANDBOOK

(D) CONSTRUCT SE-5 FIBER ROLLS PER 2009 CASQA BMP HANDBOOK

(E) CONSTRUCT SE-10 STORM DRAIN INLET PROTECTION TYPE 3 (GRAVEL BAG BERM) PER 2009 CASQA BMP HANDBOOK

(F) REPLACE LANDSCAPE AND IRRIGATION IN KIND

(G) CONSTRUCT LANDSCAPE AND IRRIGATION. SEE LANDSCAPE AND IRRIGATION PLANS.

0 20 40 80 120 160

SCALE: 1" = 40'

REGISTERED PROFESSIONAL ENGINEER ROBERT WONG No. C-64734 Exp. 06/30/2015 CIVIL STATE OF CALIFORNIA

AS-BUILT 08/01/14

Don't Dig...Until You Call U.S.A. Toll Free 1-800-227-2600 for the location of buried utility lines. Don't disrupt vital services.

TWO WORKING DAYS BEFORE YOU DIG

PLANS PREPARED BY:

AECOM
901 VIA PIEMONTE, 5TH FLOOR
ONTARIO, CA 91764
(909) 579-3050

REGISTERED PROFESSIONAL ENGINEER JAMES M. FARRAR No. C 45662 12-12 CIVIL STATE OF CALIFORNIA

MARK	REVISIONS	APPR	DATE
AS-BUILT	ADDED TOTAL SHEET COUNT		8/1/14

DESIGN BY RW DRAWN BY PM CHECKED BY RW

IOWA AVENUE
GRADE SEPARATION

EROSION CONTROL PLAN

DWG NO. R-4237

EC-01

SHEET 71 OF 133

SCALE: AS SHOWN

AS-BUILTS

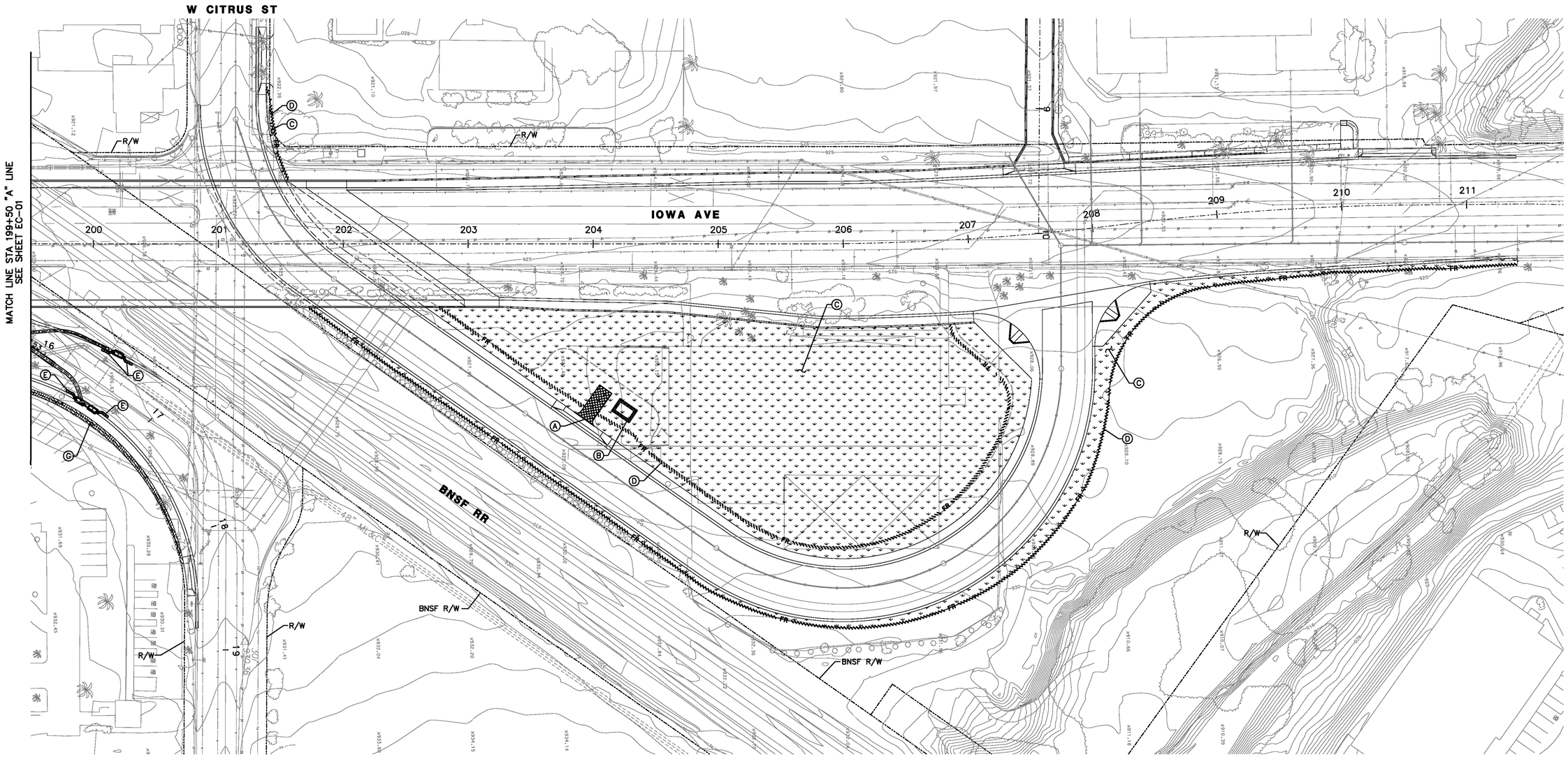

LEGEND

- GRAVEL BAG BERM
- FIBER ROLL
- HYDROSEED
- STABILIZED CONSTRUCTION ENTRANCE/EXIT
- PROPOSED LANDSCAPE

EROSION CONTROL NOTES

(A) CONSTRUCT TC-1 STABILIZED CONSTRUCTION ENTRANCE/EXIT PER 2009 CASQA BMP HANDBOOK

(B) CONSTRUCT WM-8 TEMPORARY CONCRETE WASHOUT FACILITY PER 2009 CASQA BMP HANDBOOK

(C) CONSTRUCT EC-4 HYDROSEEDING PER 2009 CASQA BMP HANDBOOK

(D) CONSTRUCT SE-5 FIBER ROLLS PER 2009 CASQA BMP HANDBOOK

(E) CONSTRUCT SE-10 STORM DRAIN INLET PROTECTION TYPE 3 (GRAVEL BAG BERM) PER 2009 CASQA BMP HANDBOOK

(G) CONSTRUCT LANDSCAPE AND IRRIGATION. SEE LANDSCAPE AND IRRIGATION PLANS.

0 20 40 80 120 160

SCALE: 1" = 40'

REGISTERED PROFESSIONAL ENGINEER ROBERT WONG No. C-64734 Exp. 06/30/2015 CIVIL STATE OF CALIFORNIA

AS-BUILT
08/01/14

Don't Dig...Until You Call U.S.A. Toll Free
1-800-227-2600
for the location of buried utility lines.
Don't disrupt vital services.
TWO WORKING DAYS BEFORE YOU DIG

PLANS PREPARED BY:
AECOM
901 VIA PIEMONTE, 5TH FLOOR
ONTARIO, CA 91764
(909) 579-3050

REGISTERED PROFESSIONAL ENGINEER JAMES M. TAYLOR No. C 45668 Exp. 12-12 CIVIL STATE OF CALIFORNIA

MARK	REVISIONS	APPR	DATE
AS-BUILT	ADDED TOTAL SHEET COUNT		8/1/14

DESIGN BY RW DRAWN BY PM CHECKED BY RW

IOWA AVENUE
GRADE SEPARATION

EROSION CONTROL PLAN

DWG NO. R-4237
EC-02
SHEET 72 OF 133

SCALE: AS SHOWN

AS-BUILTS

SIGNING AND STRIPING GENERAL NOTES:

1. SIGNING AND STRIPING INSTALLATIONS SHALL CONFORM TO THE CALIFORNIA MANUAL ON UNIFORM TRAFFIC CONTROL DEVICES (CA MUTCD), THE STATE OF CALIFORNIA DEPARTMENT OF TRANSPORTATION (CALTRANS) STANDARD PLANS AND SPECIFICATIONS DATED 2006, AND ALL ADDENDUMS THERETO, AND THE CITY OF RIVERSIDE PUBLIC WORKS DEPARTMENT STANDARD DRAWINGS, CURRENT EDITION.

2. ALL STRIPING, MARKINGS, AND LEGENDS SHALL BE PAINTED UNLESS OTHERWISE NOTED. THE CONTRACTOR SHALL PROVIDE AND INSTALL RAISED PAVEMENT MARKERS FOR ALL STRIPING. STRIPING, MARKINGS AND LEGENDS SHALL CONFORM TO THE 2006 CALTRANS STANDARD PLANS A20A THRU A20D AND A24A THRU A24E.

3. PRIOR TO FINAL ACCEPTANCE OF STREET IMPROVEMENTS, ALL PAVEMENT STRIPING AND STENCILING WITHIN THE PERIMETER OF THE CONSTRUCTION AREA SHALL BE RESTORED TO LIKE NEW CONDITION, IN A MANNER MEETING THE APPROVAL OF THE CITY OF RIVERSIDE.

4. THE CONTRACTOR SHALL RE-STRIPE EXISTING STRIPING AND CURB MARKINGS OBLITERATED BY NEW CONSTRUCTION, WHETHER OR NOT SHOWN ON THE PLANS FOR REPLACEMENT, AT NO COST TO THE CITY.

5. AT LOCATIONS WHERE EXISTING PAINTED CURB IS TO BE RECONSTRUCTED, THE CONTRACTOR SHALL PAINT THE NEW CURB AS SHOWN ON THE PLANS WITHIN 10 WORKING DAYS OF CURB CONSTRUCTION OR AS DIRECTED BY ENGINEER. THE PAINT SHALL BE WATER-BASED WITH 2-YEAR GUARANTEE AGAINST COLOR FADING. PRIOR TO THE START OF CONSTRUCTION, THE CONTRACTOR SHALL SUBMIT TO THE CITY WRITTEN PROOF OF THE MANUFACTURER'S 2-YEAR GUARANTEE.

6. ALL NEW STRIPING SHALL BE "CAT TRACKED" AND APPROVED BY THE ENGINEER PRIOR TO FINAL INSTALLATION. THE CONTRACTOR SHALL NOTIFY THE ENGINEER AFTER COMPLETING LAYOUT AND AT LEAST 3 WORKING DAYS BEFORE COMMENCING INSTALLATION OF STRIPING, MARKINGS AND MARKERS.

7. TRAFFIC SIGN FACE REFLECTIVE SHEETING SHALL BE 3M DG3 (ASTM XI) OR APPROVED EQUAL WITH PROTECTIVE GRAFFITI OVERLAY FILM OR AS OTHERWISE NOTED. ALL WARNING SIGNS SHALL HAVE A FLUORESCENT YELLOW BACKGROUND AND SCHOOL SIGNS NOTED SHALL HAVE A FLUORESCENT YELLOW-GREEN BACKGROUND.

8. SIGNS SHALL BE STANDARD SIZE UNLESS NOTED OTHERWISE. PRIOR TO INSTALLATION, NEW SIGNS SHALL BE APPROVED BY THE CITY OF RIVERSIDE. EXACT LOCATIONS OF SIGNS SHALL BE DETERMINED BY THE CITY ENGINEER.

9. SALVAGED SIGNS AND SIGN POSTS SHALL BE DELIVERED TO THE CITY OF RIVERSIDE SIGN DEPARTMENT.

10. STRIPING SHALL BE APPLIED WITHIN 48 HOURS OF SURFACE COURSE REPLACEMENT ON STREETS OPEN TO THE PUBLIC. IN NO CASE SHALL A NEWLY PAVED STREET OPEN TO THE PUBLIC BE LEFT UNSTRIPED OVER A WEEKEND OR HOLIDAY.

11. CONTRACTOR SHALL INSTALL NEW SIGN(S) AND/OR POST(S) PER CITY OF RIVERSIDE STANDARD DRAWING NO. 664.

12. ALL CONFLICTING STRIPING, PAVEMENT MARKINGS, LEGENDS, AND RAISED PAVEMENT MARKERS SHALL BE REMOVED EVEN IF NOT SHOWN ON PLANS. REMOVALS OF PAINTED STRIPING, PAVEMENT MARKINGS AND LEGENDS SHALL BE DONE BY WET SANDBLASTING. REMOVALS OF THERMOPLASTIC STRIPING, PAVEMENT MARKINGS AND LEGENDS SHALL BE REMOVED BY WET SANDBLASTING, GRINDING OR OTHER APPROVED METHOD AND SHALL NOT DAMAGE THE PAVEMENT. "BLACK OUT" OF EXISTING DELINEATION IS NOT PERMITTED. ALL DAMAGED PAVEMENT DUE TO REMOVALS SHALL BE REPAIRED AS NECESSARY TO MAINTAIN A SMOOTH AND UNIFORM SURFACE OR AS DIRECTED BY THE ENGINEER. ALL STRIPING REMOVALS AND LEGENDS SHALL BE "FOG SEALED".

SIGNING AND STRIPING CONSTRUCTION NOTES:

(1) REMOVE AND SAVAGE EXISTING SIGN(S) TO CITY'S YARD.
(2) INSTALL TYPE IV ARROW PER 2006 CALTRANS STD PLAN A24A.
(4) INSTALL DETAIL 22 STRIPING PER 2006 CALTRANS STD PLAN A20A.
(5) INSTALL DETAIL 29 STRIPING PER 2006 CALTRANS STD PLAN A20B.
(6) INSTALL DETAIL 38 STRIPING PER 2006 CALTRANS STD PLAN A20D.
(7) INSTALL 12" SOLID WHITE CROSSWALK LINE OR STOP LINE.
(8) INSTALL 4" SOLID WHITE LINE APPROXIMATELY 50' LONG.
(9) INSTALL DETAIL 27B STRIPING PER 2006 CALTRANS STD PLAN A20B.
(10) INSTALL NEW SIGN(S) AS SHOWN ON PLANS.
(11) RELOCATE EXISTING SIGN(S) AS SHOWN ON PLANS.
(13) INSTALL DETAIL 12 STRIPING PER 2006 CALTRANS STD PLAN A20A.
(14) INSTALL REVERSE TAPER PER CITY STD NO. 122.
(16) INSTALL DETAIL 38A STRIPING PER 2006 CALTRANS STD PLAN A20D.
(19) INSTALL 8" WHITE DIAGONAL STRIPING 50' ON CENTER.
(20) INSTALL DETAIL 39 PER 2006 CALTRANS STD PLAN A20D.
(21) INSTALL BIKE LANE SYMBOL PER 2006 CALTRANS STD PLAN A24C.
(22) INSTALL BIKE LANE ARROW PER 2006 CALTRANS STD PLAN A24A.
(27) INSTALL DETAIL 32 PER 2006 CALTRANS STD PLAN A20B.

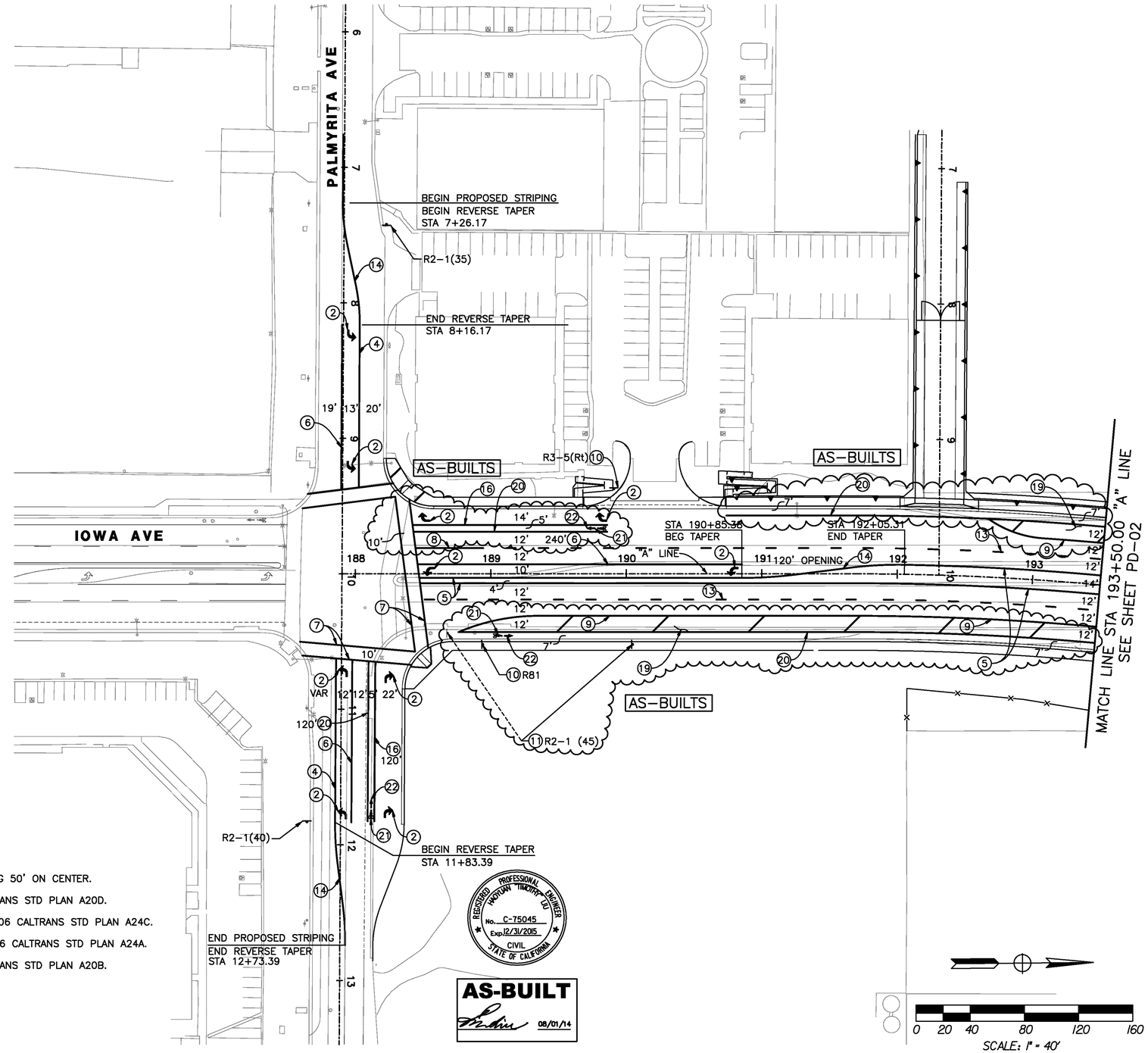

Don't Dig...Until You Call U.S.A. Toll Free
1-800-227-2600
for the location of buried utility lines.
Don't disrupt vital services.
TWO WORKING DAYS BEFORE YOU DIG

PLANS PREPARED BY:
AECOM
901 VIA PIEMONTE, 5TH FLOOR
ONTARIO, CA 91764
(909) 579-3050

REGISTERED PROFESSIONAL ENGINEER
JAMES M. FARRELL
No. C 45663
Exp. 12-12
CIVIL
STATE OF CALIFORNIA

MARK	REVISIONS	APPR	DATE
AS-BUILT	CHANGED SB RIGHT-TURN LANE WIDTH		8/1/14
	ADDED 7' WIDE BIKE LANE		
	EXTENDED SB RIGHT EDGE LINE		
	ADDED TOTAL SHEET COUNT		

DESIGN BY MO DRAWN BY MO CHECKED BY BMS

IOWA AVENUE
GRADE SEPARATION

SIGNING & STRIPING

DWG NO. XL-604
PD-01
SHEET 73 OF 133
SCALE: AS SHOWN

AS-BUILTS

SIGNING AND STRIPING CONSTRUCTION NOTES:

1. REMOVE AND SAVAGE EXISTING SIGN(S) TO CITY'S YARD.
2. INSTALL TYPE IV ARROW PER 2006 CALTRANS STD PLAN A24A.
4. INSTALL DETAIL 22 STRIPING PER 2006 CALTRANS STD PLAN A20A.
5. INSTALL DETAIL 29 STRIPING PER 2006 CALTRANS STD PLAN A20B.
6. INSTALL DETAIL 38 STRIPING PER 2006 CALTRANS STD PLAN A20D.
7. INSTALL 12" SOLID WHITE CROSSWALK LINE OR STOP LINE.
8. INSTALL 4" SOLID WHITE LINE APPROXIMATELY 50' LONG.
9. INSTALL DETAIL 27B STRIPING PER 2006 CALTRANS STD PLAN A20B.
10. INSTALL NEW SIGN(S) AS SHOWN ON PLANS.
11. RELOCATE EXISTING SIGN(S) AS SHOWN ON PLANS.
12. INSTALL "STOP" PAVEMENT MARKING PER 2006 CALTRANS STD PLAN A24D.
13. INSTALL DETAIL 12 STRIPING PER 2006 CALTRANS STD PLAN A20A.
14. INSTALL REVERSE TAPER PER CITY STD NO. 122.
15. INSTALL MEDIAN FLARE PER SPPWC STD. PLAN NO. 141-2.
19. INSTALL 12" WHITE DIAGONAL STRIPING 50' ON CENTER.
20. INSTALL DETAIL 39 PER 2006 CALTRANS STD PLAN A20D.
21. INSTALL BIKE LANE SYMBOL PER 2006 CALTRANS STD PLAN A24C.
22. INSTALL BIKE LANE ARROW PER 2006 CALTRANS STD PLAN A24A.
26. INSTALL STREET NAME SIGN PER CITY'S STANDARD NO. 662.
27. INSTALL DETAIL 32 PER 2006 CALTRANS STD PLAN A20B.
28. RELOCATE AND INSTALL RTA BUS STOP SIGN AND APPURTENANCES.

NOTE:

SEE SHEET PD-01 FOR SIGNING AND STRIPING GENERAL NOTES.

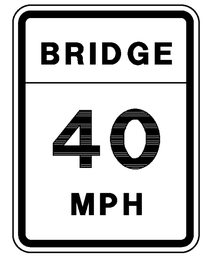

W13-3 MOD (40)

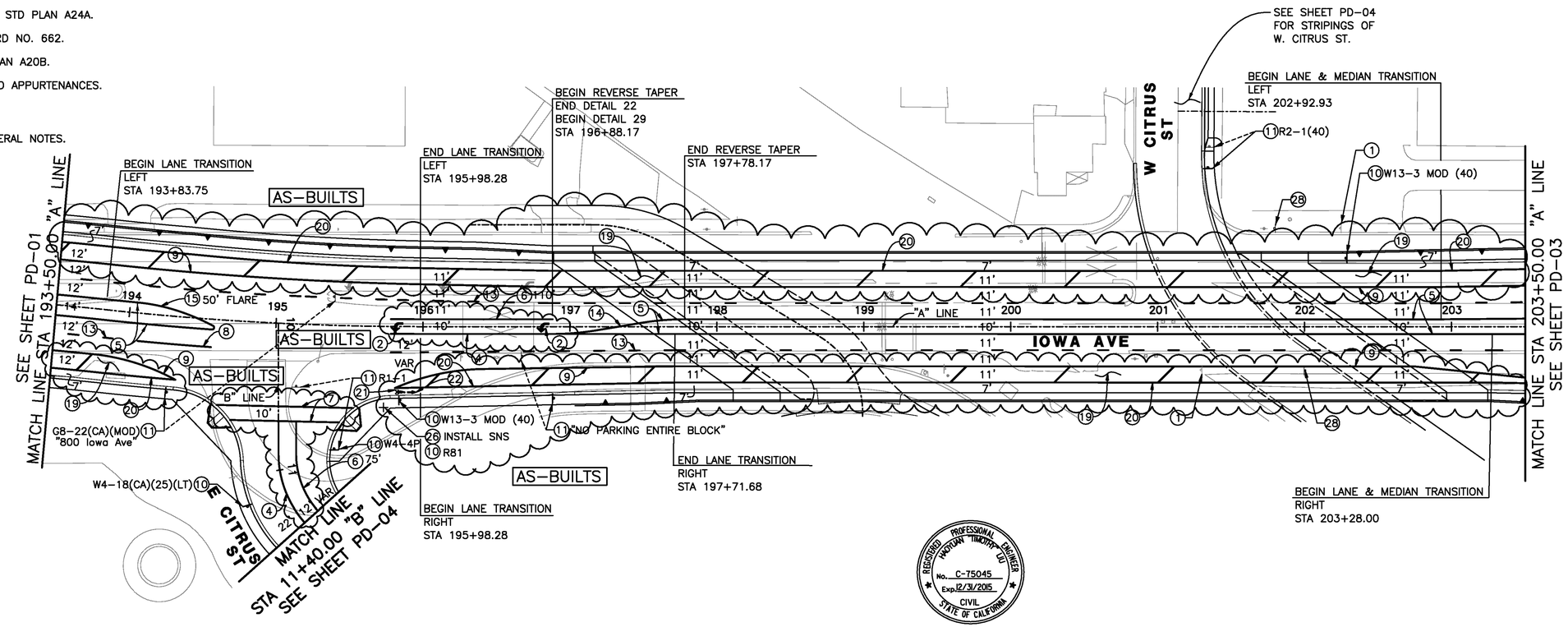

REGISTERED PROFESSIONAL ENGINEER HAOYUAN "TIMOTHY" DU No. C-75045 Exp. 12/31/2015 CIVIL STATE OF CALIFORNIA

AS-BUILT
08/01/14

0 20 40 80 120 160
SCALE: 1" = 40'

Don't Dig...Until You Call U.S.A. Toll Free
1-800-227-2600
for the location of buried utility lines.
Don't disrupt vital services.
TWO WORKING DAYS BEFORE YOU DIG

PLANS PREPARED BY:
AECOM
901 VIA PIEMONTE, 5TH FLOOR
ONTARIO, CA 91764
(909) 579-3050

REGISTERED PROFESSIONAL ENGINEER JAMES M. FARRAR No. C 45668 Exp. 12-2 CIVIL STATE OF CALIFORNIA

MARK	REVISIONS	APPR	DATE
AS-BUILT	ADDED 7' WIDE BIKE LANE		8/1/14
	SHORTENED LEFT-TUEN POCKET		
	LANE FOR SB TRAFFIC @ E CITRUS		
	INTERSECTION		
	ADDED TOTAL SHEET COUNT		

DESIGN BY MO DRAWN BY MO CHECKED BY BMS

IOWA AVENUE
GRADE SEPARATION

SIGNING & STRIPING

DWG NO. XL-604
PD-02
SHEET 74 OF 133
SCALE: AS SHOWN

AS-BUILTS

SIGNING AND STRIPING CONSTRUCTION NOTES:

1. REMOVE AND SAVAGE EXISTING SIGN(S) TO CITY'S YARD.
2. INSTALL TYPE IV ARROW PER 2006 CALTRANS STD PLAN A24A.
3. INSTALL TYPE VI ARROW PER 2006 CALTRANS STD PLAN A24A.
4. INSTALL DETAIL 22 STRIPING PER 2006 CALTRANS STD PLAN A20A.
5. INSTALL DETAIL 29 STRIPING PER 2006 CALTRANS STD PLAN A20B.
6. INSTALL DETAIL 38 STRIPING PER 2006 CALTRANS STD PLAN A20D.
7. INSTALL 12" SOLID WHITE CROSSWALK LINE OR STOP LINE.
8. INSTALL 4" SOLID WHITE LINE APPROXIMATELY 50' LONG.
9. INSTALL DETAIL 27B STRIPING PER 2006 CALTRANS STD PLAN A20B.
10. INSTALL NEW SIGN(S) AS SHOWN ON PLANS.
11. RELOCATE EXISTING SIGN(S) AS SHOWN ON PLANS.
12. INSTALL "STOP" PAVEMENT MARKING PER 2006 CALTRANS STD PLAN A24D.
13. INSTALL DETAIL 12 STRIPING PER 2006 CALTRANS STD PLAN A20A.
16. INSTALL DETAIL 38A STRIPING PER 2006 CALTRANS STD PLAN A20D.
19. INSTALL 12" WHITE DIAGONAL STRIPING 50' ON CENTER.
20. INSTALL DETAIL 39 PER 2006 CALTRANS STD PLAN A20D.
21. INSTALL BIKE LANE SYMBOL PER 2006 CALTRANS STD PLAN A24C.
22. INSTALL BIKE LANE ARROW PER 2006 CALTRANS STD PLAN A24A.
24. INSTALL 8" YELLOW DIAGONAL.
25. INSTALL 8" WHITE CHEVRON MARKINGS AT 50' ON CENTER.
26. INSTALL STREET NAME SIGN PER CITY'S STANDARD NO. 662.
27. INSTALL DETAIL 32 PER 2006 CALTRANS STD PLAN A20B.
28. RELOCATE AND INSTALL RTA BUS STOP SIGN AND APPURTENANCES.
29. INSTALL 4" SOLID WHITE LINE (18' MIN LONG) FOR PARKING SPACES.

NOTE:

SEE SHEET PD-01 FOR SIGNING AND STRIPING GENERAL NOTES.

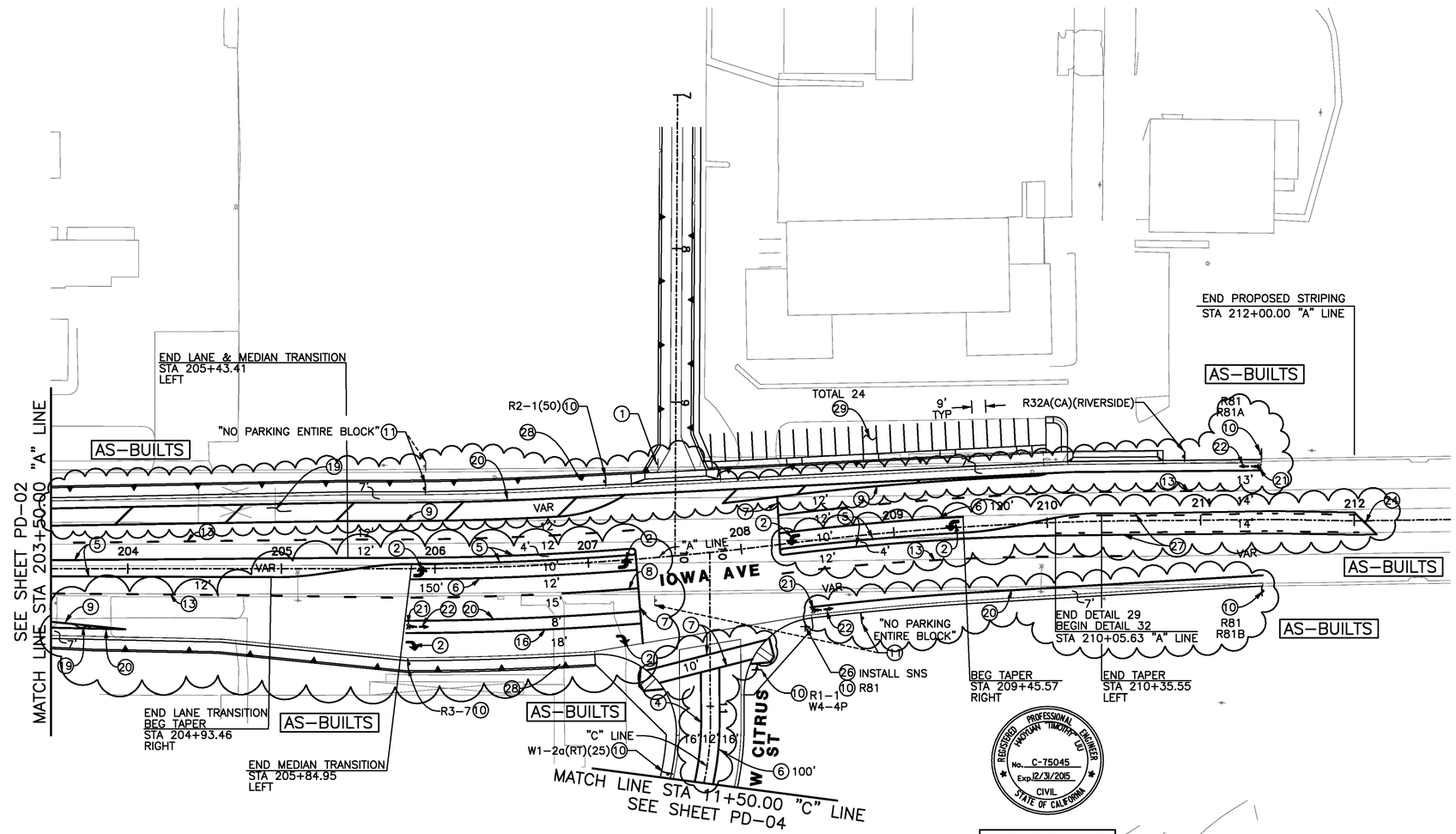

REGISTERED PROFESSIONAL ENGINEER HASTOWN TIMOTHY LIU No. C-75045 Exp. 12/31/2015 CIVIL STATE OF CALIFORNIA

AS-BUILT
08/01/14

0 20 40 80 120 160
SCALE: 1" = 40'

Don't Dig...Until You Call U.S.A. Toll Free
1-800-227-2600
for the location of buried utility lines.
Don't disrupt vital services.
TWO WORKING DAYS BEFORE YOU DIG

PLANS PREPARED BY:
AECOM
901 VIA PIEMONTE, 5TH FLOOR
ONTARIO, CA 91764
(909) 579-3050

REGISTERED PROFESSIONAL ENGINEER JAMES M. FARRAR No. C-45662 Exp. 12-12 CIVIL STATE OF CALIFORNIA

MARK	REVISIONS	APPR	DATE
AS-BUILT	CHANGED NB RIGHT-TURN LANE WIDTH		8/1/14
	AND STRIPING LENGTH		
	ADDED 7' WIDE BIKE LANE		
	REVISED ALL MEDIAN STRIPING PER FIELD		
	INFORMATION		
	ADDED TOTAL SHEET COUNT		

DESIGN BY MO DRAWN BY MO CHECKED BY BMS

IOWA AVENUE
GRADE SEPARATION

SIGNING & STRIPING

DWG NO. XL-604
PD-03
SHEET 75 OF 133
SCALE: AS SHOWN

AS-BUILTS

SIGNING AND STRIPING CONSTRUCTION NOTES:

(2) INSTALL TYPE IV ARROW PER 2006 CALTRANS STD PLAN A24A.
(4) INSTALL DETAIL 22 STRIPING PER 2006 CALTRANS STD PLAN A20A.
(6) INSTALL DETAIL 38 STRIPING PER 2006 CALTRANS STD PLAN A20D.
(7) INSTALL 12" SOLID WHITE CROSSWALK LINE OR STOP LINE.
(10) INSTALL NEW SIGN(S) AS SHOWN ON PLANS.
(12) INSTALL "STOP" PAVEMENT MARKING PER 2006 CALTRANS STD PLAN A24D.
(14) INSTALL REVERSE TAPER PER CITY STD NO. 122.
(26) INSTALL STREET NAME SIGN PER CITY'S STANDARD NO. 662.

NOTE:

SEE SHEET PD-01 FOR SIGNING AND STRIPING GENERAL NOTES.

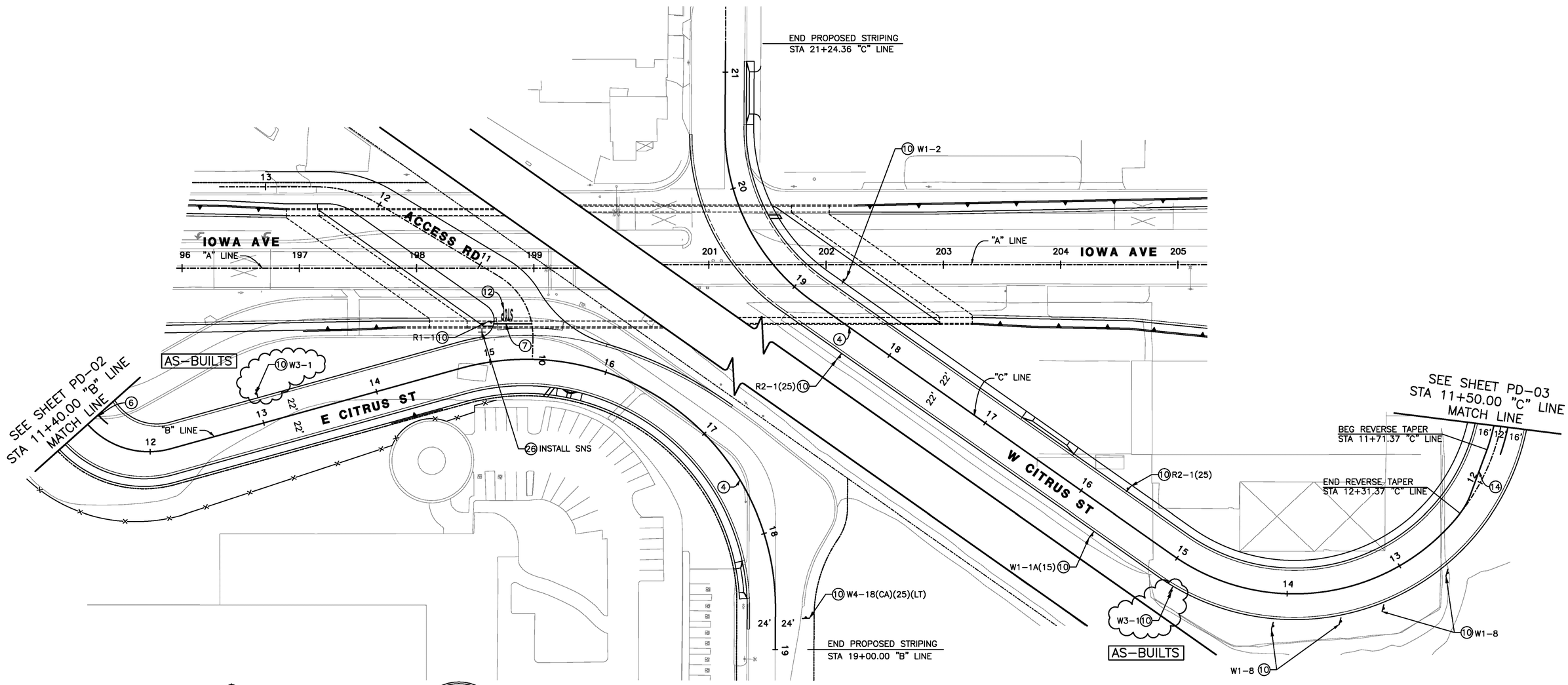

0 20 40 80 120 160
SCALE: 1" = 40'

REGISTERED PROFESSIONAL ENGINEER HAOYUAN TIMOTHY LIU No. C-75045 Exp. 12/31/2015 CIVIL STATE OF CALIFORNIA

AS-BUILT
06/01/14

Don't Dig...Until You Call U.S.A. Toll Free
1-800-227-2600
for the location of buried utility lines.
Don't disrupt vital services.
TWO WORKING DAYS BEFORE YOU DIG

PLANS PREPARED BY:
AECOM
901 VIA PIEMONTE, 5TH FLOOR
ONTARIO, CA 91764
(909) 579-3050

REGISTERED PROFESSIONAL ENGINEER JAMES M FARRAR No. C 45662 Exp. 12-12 CIVIL STATE OF CALIFORNIA

MARK	REVISIONS	APPR	DATE
AS-BUILT	CHANGED SB RIGHT-TURN LANE WIDTH		8/1/14
	ADDED 7' WIDE BIKE LANE		
	EXTENDED SB RIGHT EDGE LINE		
	ADDED TOTAL SHEET COUNT		

DESIGN BY MO DRAWN BY MO CHECKED BY BMS

IOWA AVENUE
GRADE SEPARATION

SIGNING & STRIPING

DWG NO. XL-604
PD-04
SHEET 76 OF 133
SCALE: AS SHOWN

AS-BUILTS

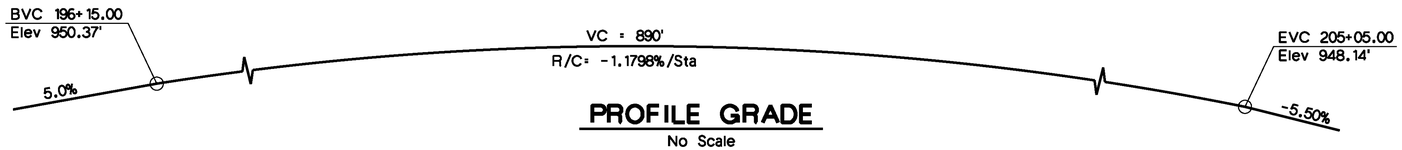

PROFILE GRADE

No Scale

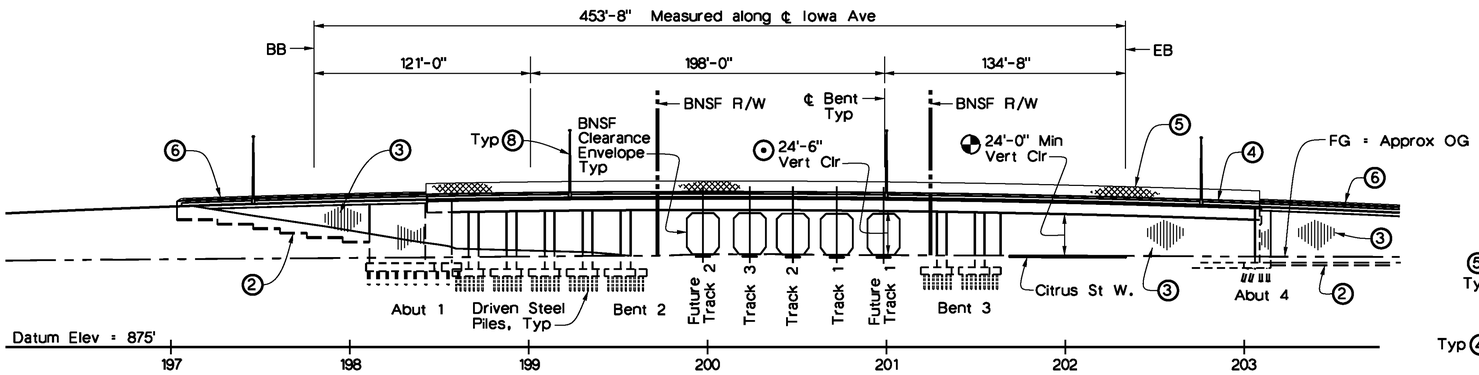

ELEVATION

1" = 40'
(Shown along Right edge of deck)

Note:
Not all Columns shown.

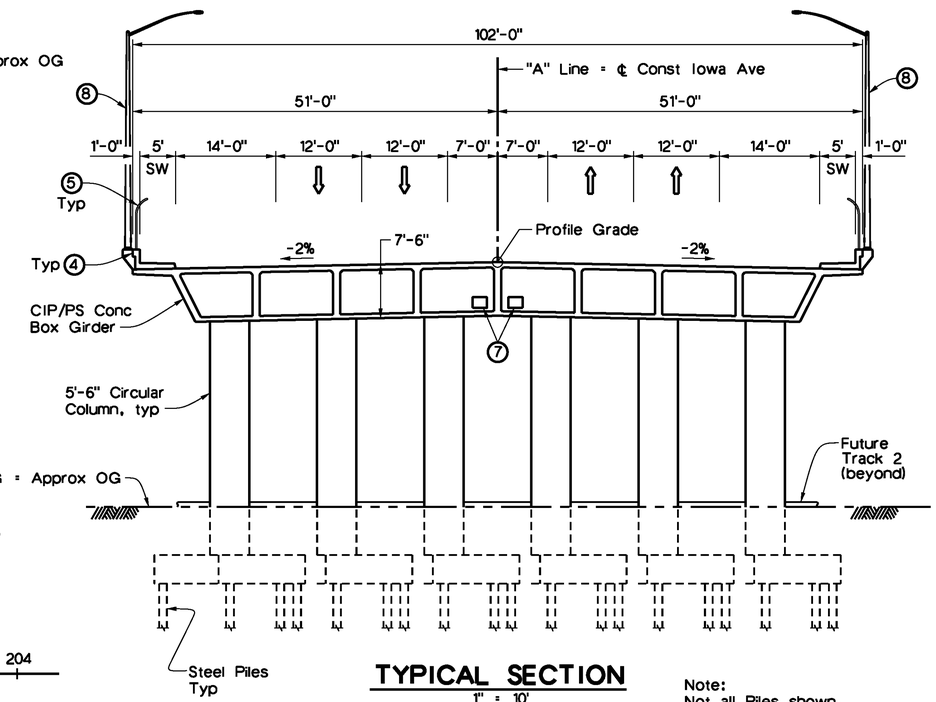

TYPICAL SECTION

1" = 10'
(Bent 2 shown)

Note:
Not all Piles shown.

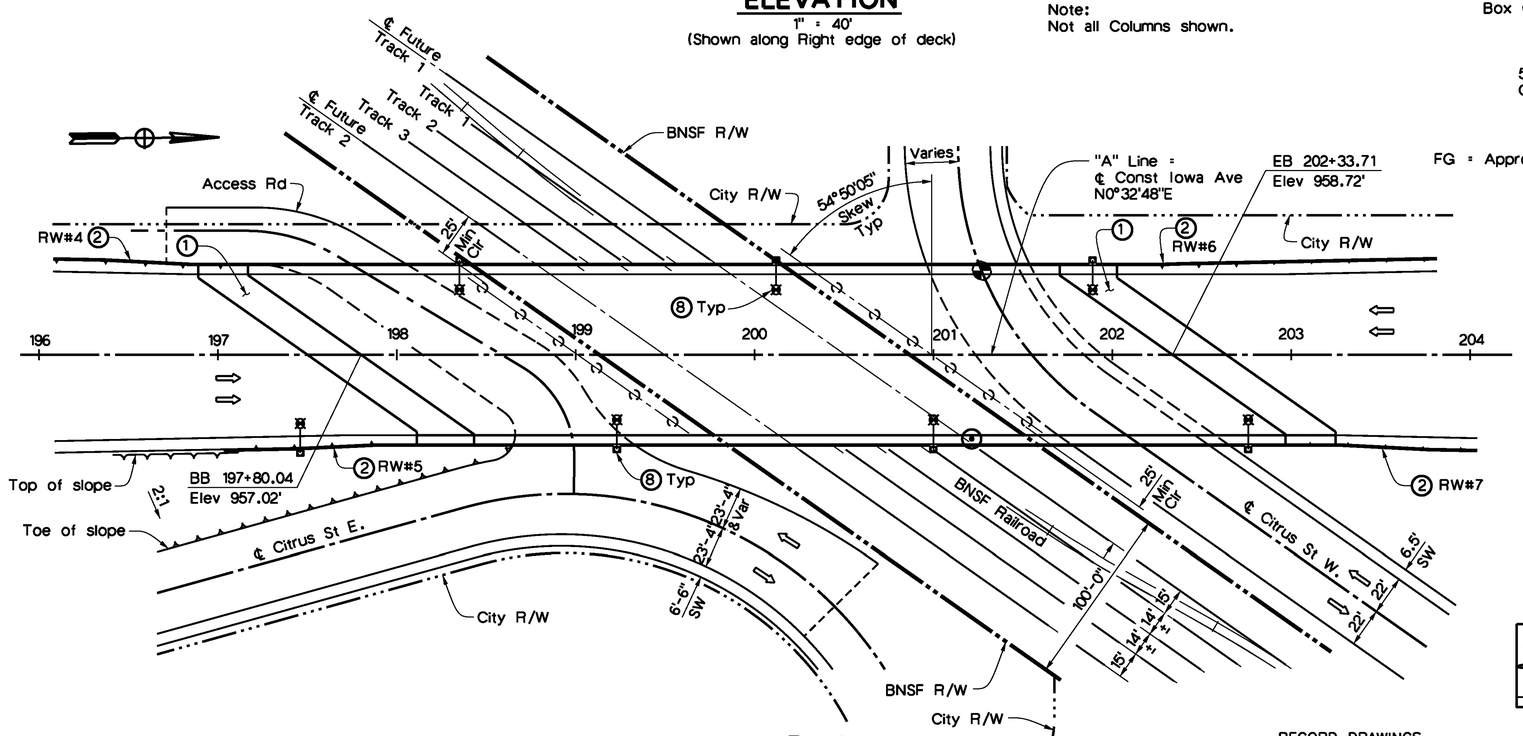

PLAN

1" = 40'

Notes:

1. For General Notes, Pile Data, Quantities and Index to Plans, see "General Notes" sheet.
2. Minimum vertical clearance shown is over Future track. For clearance over existing tracks, see "Part Structure Elevation at BNSF Railroad" sheet.
3. For Electrolier anchorage to Conc Barrier, see "Typical Section" sheet. For locations and other details, see Street Lighting Plans.

RECORD DRAWINGS
These Record Drawings (As-Builts) are based upon review and reliance on the design revisions during construction, field survey data, marked up prints from the Contractor and / or City Inspector, and a final site inspection.

AS-BUILT
08/01/14

LEGEND

1. Structure Approach Type N(30S)
2. Retaining Wall (MSE), see Ret Wall Plans
3. Architectural Treatment
4. Concrete Barrier (Type 26 Mod)
5. Chain Link Railing (Type 3)
6. Tubular Hand Railing
7. Future Utility Opening
8. Barrier Mounted Electrolier, See "Note 3"
- Point of minimum vertical clearance (RR), See "Note 2"
- Point of minimum vertical clearance (Citrus St W.)
- Direction of traffic

Don't Dig...Until You Call U.S.A. Toll Free 1-800-227-2600 for the location of buried utility lines. Don't disrupt vital services.
TWO WORKING DAYS BEFORE YOU DIG

PLANS PREPARED BY:
AECOM
901 VIA PIEMONTE
ONTARIO, CA 91764
(909) 579-3050

REGISTERED PROFESSIONAL ENGINEER ROBERT PRICE No. C56855 Exp. 6/30/13 CIVIL STATE OF CALIFORNIA

MARK	REVISIONS	APPR	DATE
AS-BUILT	REVISED AS NOTED	TD	8/01/14

DESIGN BY R.A.P. DRAWN BY R.A./M.A. CHECKED BY M.C./A.S.

IOWA AVENUE
GRADE SEPARATION

GENERAL PLAN

DWG NO. R-4237
S-01
SHEET 77 OF 133
SCALE: AS SHOWN

AS-BUILT

GENERAL NOTES

DESIGN: AASHTO LRFD Bridge Design Specifications, 3rd Edition with 2005 & 2006 Interims and the Caltrans Amendments v3.06.01 except for geotechnical design of deep foundations and retaining walls.

For geotechnical design of deep foundations and earth retaining systems:
BRIDGE DESIGN SPECIFICATIONS
(1996 AASHTO with Interims and Revisions by CALTRANS)

SEISMIC DESIGN: Caltrans Seismic Design Criteria (SDC) Version 1.6, November 2010

DEAD LOAD: Includes 35 psf for future wearing surface

LIVE LOADING: HL93 w/ "Low Boy" and permit design load
Pedestrian Load = 75 psf

SEISMIC LOADING: SDC ARS Curve for Soil Profile D
Soil Profile: Vs30 = 300 meters/sec
Moment Magnitude: M_{MAX} = 7.5
Peak Ground Acceleration 0.61g

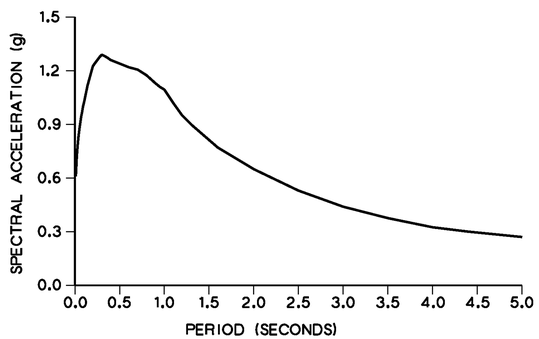

REINFORCED CONCRETE: fy = 60,000 psi (ASTM A706)
f'c = 3,600 psi (Unless otherwise noted)
n = 9
See "Deck Contours" sheet for Concrete Strength and Type Limits

PRESTRESSED CONCRETE: See "Prestressing Notes" on Girder Details" sheet

ABBREVIATIONS

CP	Concrete Pipe
DIP	Ductile Iron Pipe
Imp	Improved, Improvement
ML&C	Mortar lined and coated
T/R	Top of Rail

STANDARD PLANS DATED MAY 2006 WITH ERRATA

A10A	ACRONYMS AND ABBREVIATIONS (SHEET 1 OF 2)
A10B	ACRONYMS AND ABBREVIATIONS (SHEET 2 OF 2)
A10C	SYMBOLS (SHEET 1 OF 2)
A10D	SYMBOLS (SHEET 2 OF 2)
A62C	LIMITS OF PAYMENT FOR EXCAVATION AND BACKFILL - BRIDGE
B0-1	BRIDGE DETAILS
B0-3	BRIDGE DETAILS
B0-5	BRIDGE DETAILS
B0-13	BRIDGE DETAILS
B3-2	RETAINING WALL TYPE 1 (H=32' THROUGH 36')
B3-8	RETAINING WALL DETAILS No. 1
RSP B6-21	JOINT SEALS (MAXIMUM MOVEMENT RATING = 2")
B7-1	BOX GIRDER DETAILS
B7-10	UTILITY OPENING - BOX GIRDER
B8-5	CAST-IN-PLACE PRESTRESSED GIRDER DETAILS
B11-51	TUBULAR HAND RAILING
B11-54	CONCRETE BARRIER TYPE 26
B14-5	WATER SUPPLY LINE (DETAILS) (PIPE SIZES LESS THAN 4")
D99B	EDGE DRAIN OUTLET AND VENT DETAILS
ES-6B	ELECTRICAL SYSTEMS (LIGHTING STANDARD TYPES 15 AND 21 BARRIER RAIL MOUNTED DETAILS)

Standard Plan Sheet No.

Detail No.

PILE DATA TABLE

LOCATION	PILE TYPE	NOMINAL RESISTANCE (kips)		DESIGN TIP ELEVATION (feet)	SPECIFIED TIP ELEVATION (feet)	NOMINAL DRIVING RESISTANCE (kips)
		COMPRESSION	TENSION			
ABUT 1	HP 14x89	250	N/A	877.12 (a-I) 892.12 (c)	877.0	250
ABUT 1 WW	HP 14x89	250	N/A	877.12 (a-I) 892.12 (c)	877.0	250
BENT 2	HP 14x89	260	-60	872.92 (a-I) 874.92 (a-II) 892.92 (b-II) 890.92 (c)	873.0	260
BENT 3	HP 14x89	260	-60	876.92 (a-I) 877.92 (a-II) 894.92 (b-II) 888.92 (c)	877.0	260
ABUT 4	HP 14x89	240	N/A	880.52 (a-I) 893.52 (c)	880.0	240
ABUT 4 WW	HP 14x89	220	N/A	883.52 (a-I) 895.52 (c)	883.0	220

Notes:
1. Design tip elevations for Abutments and Retaining Walls are controlled by the following demands: (a) Compression; (c) Settlement; (d) Lateral Load
2. Design tip elevations for Bents are controlled by the following demands: (a) Compression; (b) Tension; (c) Settlement; (d) Lateral Load
3. The specified tip elevation shall not be raised above the design tip elevations for tension load, lateral load, and tolerable settlement.
4. NA - Not Applicable.

DRAWING NUMBER	DRAWING TITLE	SHEET NUMBER
	STRUCTURAL	
S-01	GENERAL PLAN	
S-02	GENERAL NOTES	
S-03	PART STRUCTURE ELEVATION AT BNSF RAILROAD	
S-04	DECK CONTOURS	
S-05	FOUNDATION PLAN	
S-06	ABUTMENT LAYOUT	
S-07	ABUTMENT PILE LAYOUT	
S-08	ABUTMENT DETAILS NO. 1	
S-09	ABUTMENT DETAILS NO. 2	
S-10	ABUTMENT DETAILS NO. 3	
S-11	ABUTMENT DETAILS NO. 4	
S-12	ABUTMENT DETAILS NO. 5	
S-13	BENT LAYOUT	
S-14	BENT DETAILS NO. 1	
S-15	BENT DETAILS NO. 2	
S-16	TYPICAL SECTION	
S-17	GIRDER LAYOUT NO. 1	
S-18	GIRDER LAYOUT NO. 2	
S-19	GIRDER DETAILS	
S-20	END DIAPHRAGM DETAILS	
S-21	GIRDER REINFORCEMENT	
S-22	JOINT SEAL ASSEMBLY (MAXIMUM MOVEMENT RATING=4")	
S-23	JOINT ARMOR DETAILS (MAXIMUM MOVEMENT RATING=4")	
S-24	STRUCTURE APPROACH TYPE N(30S)	
S-25	STRUCTURE APPROACH DRAINAGE DETAILS	
S-26	CHAIN LINK RAILING, TYPE 3	
S-27	LOG OF TEST BORINGS	

QUANTITIES

REMOVE ABANDONED UTILITY FACILITY SEGMENT	19	EA
STRUCTURE EXCAVATION (BRIDGE)	3,813	CY
STRUCTURE BACKFILL (BRIDGE)	6,437	CY
FURNISH STEEL PILING (HP 14 X 89)	23,871	LF
DRIVE STEEL PILE (HP 14 X 89)	586	EA
PRESTRESSING CAST-IN-PLACE CONCRETE	1	LS
STRUCTURAL CONCRETE, BRIDGE FOOTING	1,575	CY
STRUCTURAL CONCRETE, BRIDGE	6,284	CY
STRUCTURAL CONCRETE, APPROACH SLAB (TYPE N)	227	CY
ARCHITECTURAL TREATMENT	13,636	SQFT
ANTI-GRAFFITI COATING	23,687	SQFT
JOINT SEAL ASSEMBLY (MR 3")	355	LF
BAR REINFORCING STEEL (BRIDGE)	1,678,305	LB
18" WELDED STEEL PIPE CASING (BRIDGE)	182	LF
MISCELLANEOUS METAL (BRIDGE)	1,511	LB
CHAIN LINK RAILING (TYPE 3)	908	LF
TUBULAR HANDRAILING	120	LF
CONCRETE BARRIER (TYPE 26 MODIFIED)	1,028	LF

REGISTERED PROFESSIONAL ENGINEER TODD W. DUDLEY No. C-39514 Exp. 12/31/2015 CIVIL STATE OF CALIFORNIA

AS-BUILT
08/01/14

Don't Dig...Until You Call U.S.A. Toll Free 1-800-227-2600 for the location of buried utility lines. Don't disrupt vital services.
TWO WORKING DAYS BEFORE YOU DIG

PLANS PREPARED BY:
AECOM
901 VIA PIEMONTE
ONTARIO, CA 91764
(909) 579-3050

REGISTERED PROFESSIONAL ENGINEER ROBERT PRICE No. C56855 Exp. 6/30/13 CIVIL STATE OF CALIFORNIA

MARK	REVISIONS	APPR	DATE
AS-BUILT	REVISED AS NOTED	TD	8/01/14

DESIGN BY R.A.P. DRAWN BY R.A./M.A. CHECKED BY M.C./A.S.

IOWA AVENUE
GRADE SEPARATION

GENERAL NOTES

DWG NO. R-4237
S-02
SHEET 78 OF 133
SCALE: AS SHOWN

AS-BUILT

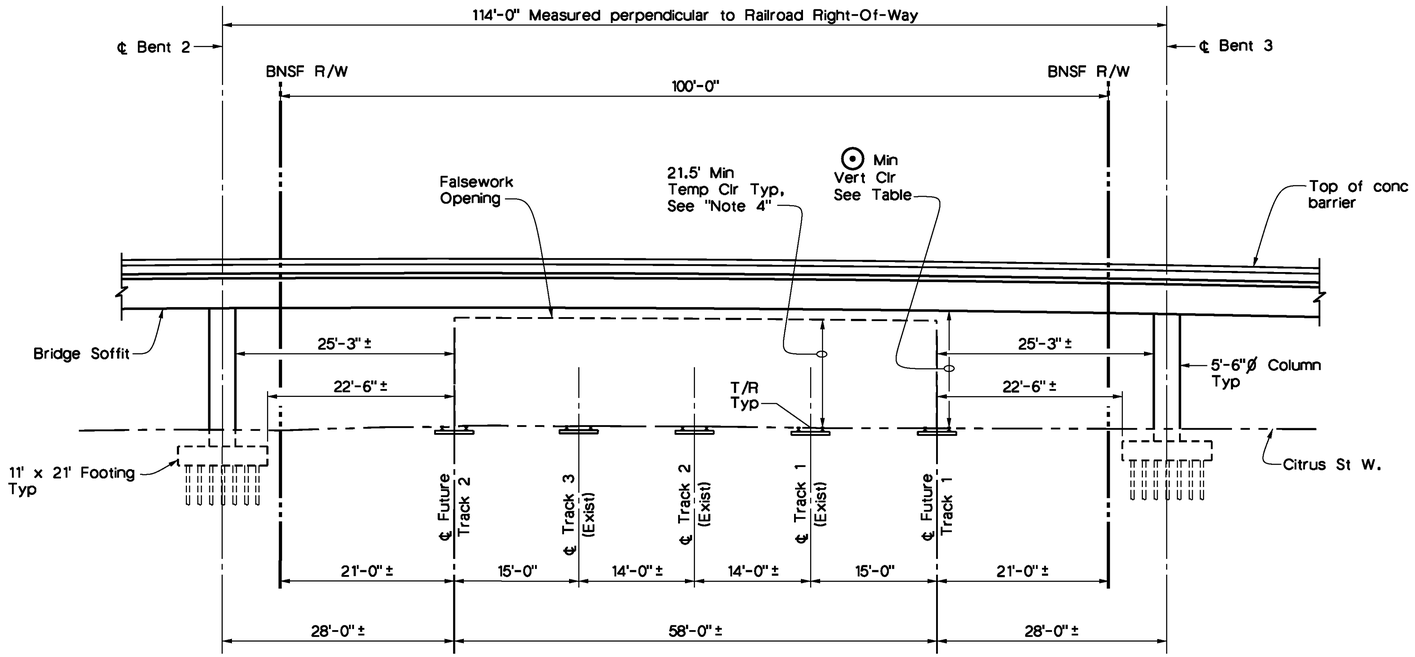

PART ELEVATION

1" = 15'

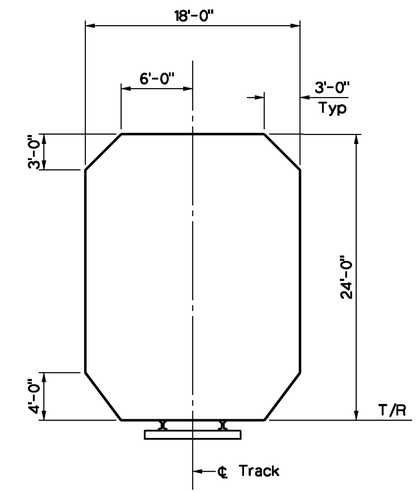

BNSF PERMANENT CLEARANCE ENVELOPE

No Scale

Notes:

1. All dimensions are measured normal to ℄ Tracks.
2. T/R elevations are based on field survey data by Associated Engineers dated October 2, 2008.
3. Top of rail elevation for Future Track #1 & 2 are assumed to be the same as existing Track #1 & 3 respectively.
4. Special falsework design is required in order to maintain temporary clearances over BNSF Railway.

⊙ FINAL MINIMUM VERTICAL CLEARANCE AT RAILROAD

Location	Elev at Proposed Bridge Soffit	Elev Top of Rail	Final Clearance Ft. Inches
Track 1	952.44'	927.46'	24'-11¾"
Track 2	952.56'	927.34'	25'-2⅝"
Track 3	952.61'	926.45'	26'-1⅞"
Future Track 1	952.22'	927.70'	24'-6¼"
Future Track 2	952.60'	926.58'	26'-0¼"

REGISTERED PROFESSIONAL ENGINEER 1000 W. DUDLEY No. C-39514 Exp. 12/31/2015 CIVIL STATE OF CALIFORNIA

AS-BUILT 08/01/14

Don't Dig...Until You Call U.S.A. Toll Free 1-800-227-2600 for the location of buried utility lines. Don't disrupt vital services. TWO WORKING DAYS BEFORE YOU DIG

PLANS PREPARED BY:
AECOM
901 VIA PIEMONTE
ONTARIO, CA 91764
(909) 579-3050

REGISTERED PROFESSIONAL ENGINEER ROBERT PRICE No. C56855 Exp. 6/30/13 CIVIL STATE OF CALIFORNIA

MARK	REVISIONS	APPR	DATE
AS-BUILT	REVISED AS NOTED	TD	8/01/14

DESIGN BY R.A.P. DRAWN BY R.A./M.A. CHECKED BY M.C./A.S.

IOWA AVENUE
GRADE SEPARATION
PART
STRUCTURE ELEVATION AT BNSF RAILROAD

DWG NO. R-4237
S-03
SHEET 79 OF 133
SCALE: AS SHOWN

AS-BUILT

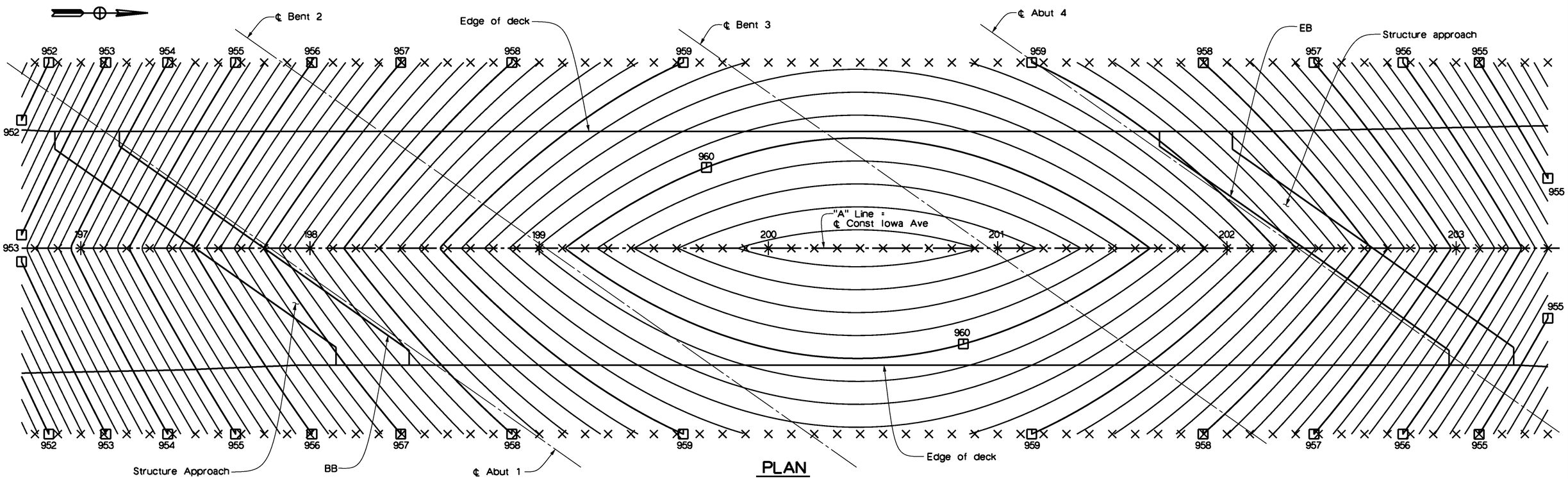

PLAN

1" = 20'

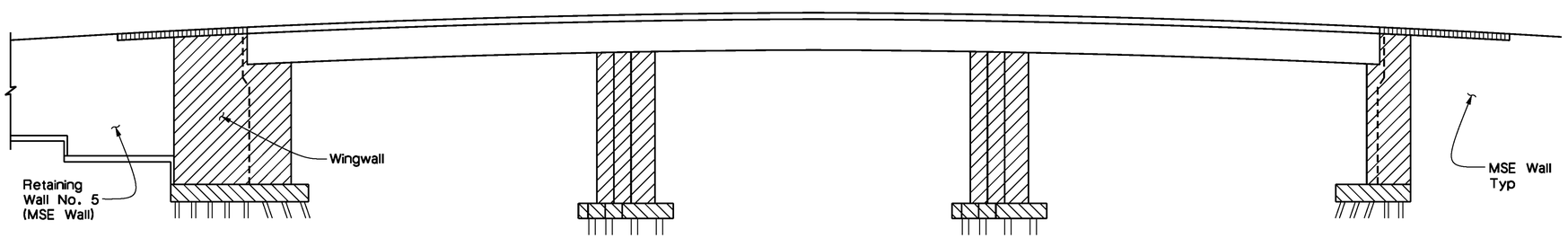

LEGEND

X = Indicates 10' intervals along ℄ Iowa Ave

Indicates even foot contours

Contour interval is 0.20'
Contours do not include camber

CONCRETE STRENGTH AND TYPE LIMITS

No Scale

- Structural Concrete Bridge, see "Prestressing Notes" on "Girder Details" sheet
- Structural Concrete, Bridge (4,000 psi @ 28 days), See "Note 1"
- Structural Concrete, Bridge Footing (4,000 psi @ 28 days), See "Note 1"
- Structural Concrete, Approach Slab

REGISTERED PROFESSIONAL ENGINEER
TODD W. DUDLEY
No. C-39514
Exp. 12/31/2015
CIVIL
STATE OF CALIFORNIA

AS-BUILT
08/01/14

Don't Dig...Until You Call U.S.A. Toll Free
1-800-227-2600
for the location of buried utility lines.
Don't disrupt vital services.
TWO WORKING DAYS BEFORE YOU DIG

PLANS PREPARED BY:
AECOM
901 VIA PIEMONTE
ONTARIO, CA 91764
(909) 579-3050

REGISTERED PROFESSIONAL ENGINEER
ROBERT PRICE
No. C56855
Exp. 6/30/13
CIVIL
STATE OF CALIFORNIA

MARK	REVISIONS	APPR	DATE
AS-BUILT	REVISED AS NOTED	TD	8/01/14

DESIGN BY R.A.P. DRAWN BY R.A./M.A. CHECKED BY M.C./A.S.

IOWA AVENUE
GRADE SEPARATION

DECK CONTOURS

DWG NO. R-4237
S-04
SHEET 80 OF 133
SCALE: AS SHOWN

AS-BUILT

RELOCATED UTILITY LEGEND

- 12 48"Ø CML&C Steel Pipe, City Water (protect in place)
- 13 16"Ø CML&C Steel Pipe, City Water (protect in place)
- 14 12"Ø DIP, City Water (protect in place)
- 15 12"Ø Gas, SCG (protect in place)
- 16 AT&T UG (protect in place)
- 17 8"Ø DIP, City Water (protect in place)
- 18 18"Ø Sanitary Sewer (protect in place)
- 19 UG Electric (protect in place)
- 20 Waterline blow off valve (protect in place)
- 21 8"Ø VCP Sewer
- 22 2"Ø Water Service (to be relocated by Others)

EXISTING UTILITY LEGEND

- 1 42"Ø CP City Water (abandoned)
- 2 18"Ø RCP City Storm Drain (protect in place)
- 3 16"Ø ML&C DIP City Water (abandoned)
- 4 14"Ø Steel City Water (abandoned)
- 5 12"Ø CIP Water (abandoned)

EXISTING UTILITY LEGEND (cont'd)

- 6 12"Ø Steel GAS SCG (abandoned)
- 7 8"Ø VCP Sewer (abandoned)
- 8 8"Ø RCP Water (abandoned)
- 9 4"Ø Sprint PVC Fiber Optic (protect in place)
- 10 AT&T Fiber Optic (abandoned)
- 11 UG City Electric (protect in place)

ABANDONED UTILITY LEGEND

- [1] Caution: Abandoned Gas Line Contractor to confirm with owner the status of that section of line, 5 locations
- [2] Abandoned Non-Hazardous Utility Contractor to remove conficting carrier Lines and backfill prior to driving piles, total 22 locations.
  Abut 1 (3 locations)
  Bent 2 (4 locations)
  Bent 3 (9 locations)
  Abut 4 (3 locations)

Notes:

1. All piles not shown for clarity. For "Pile Data Table", see "General Notes" sheet.
2. Contractor shall verify the location and condition of existing and abandoned utilities before excavation and driving piles.
3. For MSE wall layout, see "Retaining Wall Plans".
4. For wingwall footing layout, see "Abutment Details No. 3 & 4" sheets.
5. Utilities shown are approximate, see "Utility Plans."

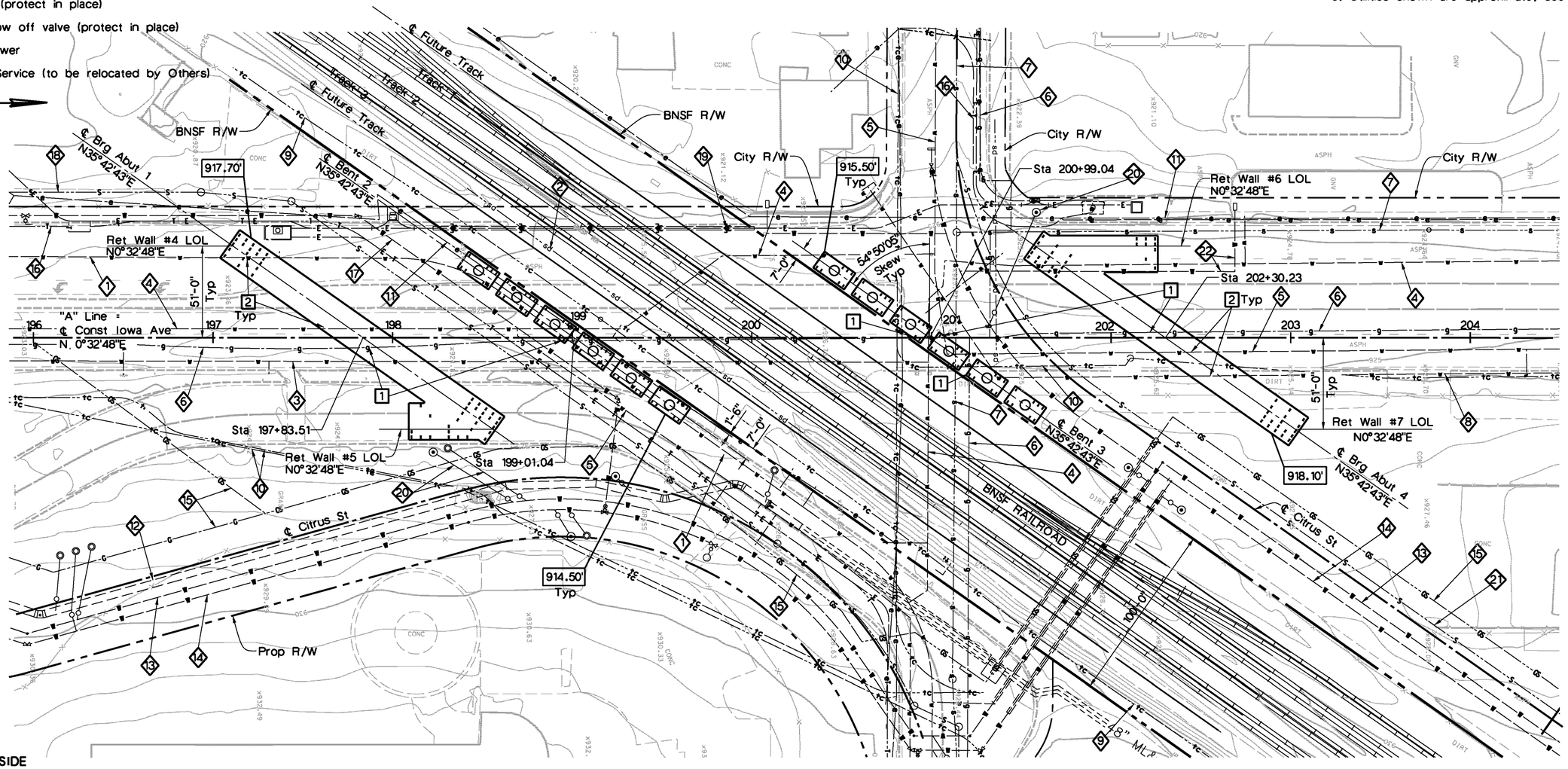

CITY OF RIVERSIDE BENCHMARKS

BM #J7-M2 Elev: 871.063'
FD PK NAIL & CITY ENG TAG IN W'LY WALL OF CATCH BASIN, 1' N. ON N'LY CURB OF COLUMBIA AVE, 155' E'LY OF E. LA CADENA DR.

BM #J8-F2 Elev: 952.776'
FD CHS SQ AT SE TOP OF CATCH BASIN ON N'LY SIDE OF CENTER ST, E. OF TRANSIT AVE

Vertical Datum: NAV-1929
Horizontal Datum: NAD83 (NSRS2007) CCS83, ZONE 6 (0406)
See "Road Plans" for control.

REGISTERED PROFESSIONAL ENGINEER
ROOD W. DUDLEY
No. C-39514
Exp. 12/31/2015
CIVIL
STATE OF CALIFORNIA

PLAN

1" = 30'

LEGEND

Indicates bottom of Footing elevation

Indicates H Pile, not all shown

AS-BUILT
08/01/14

Don't Dig...Until You Call U.S.A. Toll Free
1-800-227-2600
for the location of buried utility lines.
Don't disrupt vital services.
TWO WORKING DAYS BEFORE YOU DIG

PLANS PREPARED BY:
AECOM
901 VIA PIEMONTE
ONTARIO, CA 91764
(909) 579-3050

REGISTERED PROFESSIONAL ENGINEER
ROBERT PRICE
No. C56855
Exp. 6/30/13
CIVIL
STATE OF CALIFORNIA

MARK	REVISIONS	APPR	DATE
AS-BUILT	REVISED AS NOTED	TD	8/01/14

DESIGN BY R.A.P. DRAWN BY R.A./M.A. CHECKED BY M.C./A.S.

IOWA AVENUE
GRADE SEPARATION

FOUNDATION PLAN

DWG NO. R-4237
S-05
SHEET 81 OF 133
SCALE: AS SHOWN

AS-BUILT

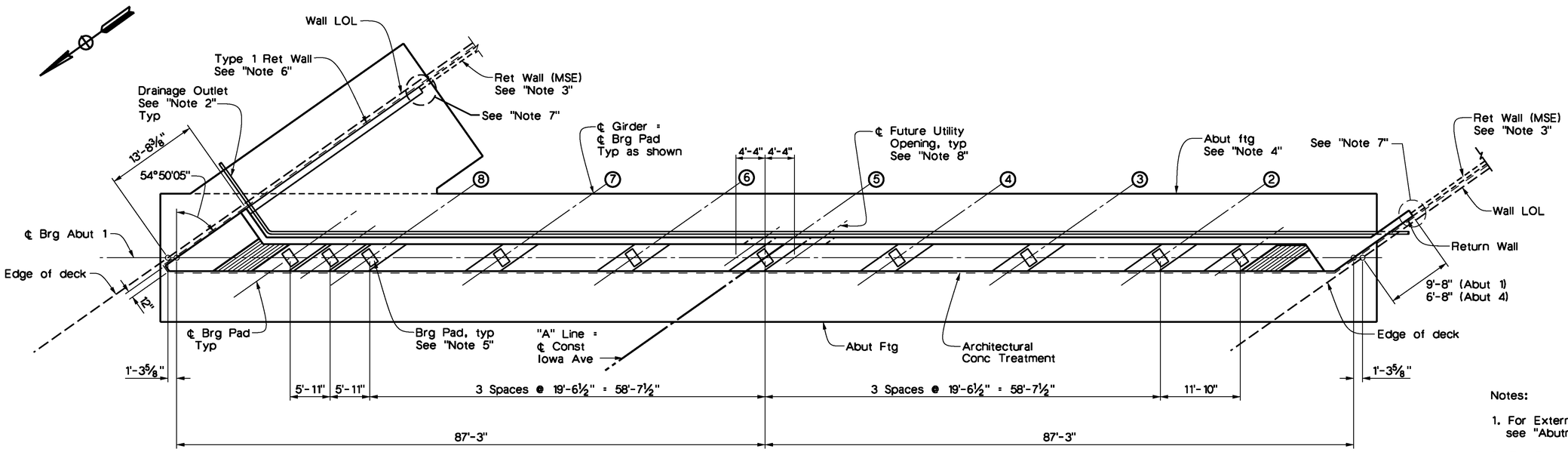

PLAN
1/8" = 1'-0"

Note: Piles not shown.

(Abutment 1 shown, Abutment 4 similar)

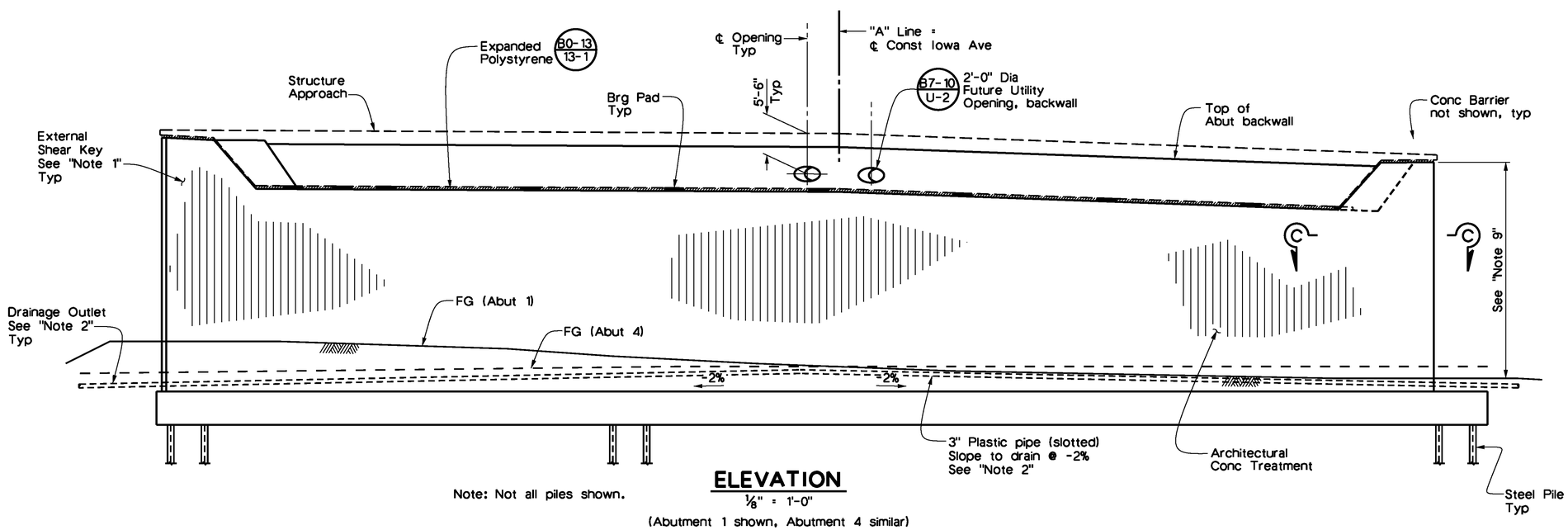

Note: Not all piles shown.

ELEVATION
1/8" = 1'-0"

(Abutment 1 shown, Abutment 4 similar)

Notes:

1. For External Shear Key detail, see "Abutment Details No. 2" sheet.
2. For Drainage outlet details see "Structure Approach Drainage Details" sheet.
3. For Ret Wall layout & details, see "Ret Wall Plans".
4. For Abutment Footing size & pile layout, see "Abutment Footing Layout" sheet.
5. For bearing pad details, see "Abutment Details No. 1" sheet.
6. For wingwall layout & details, see "Abutment Details No. 3, 4 & No. 5" sheets.
7. See MSE Face Panel-to-Concrete Wall Joint detail on Retaining Wall Plans, "MSE Detail No. 1" Sheet.
8. Casing Pipe for future utilities not shown, For details, see "Abutment Details No. 1" sheet.
9. Apply Anti-Graffiti Coating on all vertical surfaces on Abutment faces and Wingwalls.
10. For "Section C-C", see "Abutment Details No. 5" sheet.
11. For Architectural Conc Treatment deails, see "RW Architectural Details" sheets.

REGISTERED PROFESSIONAL ENGINEER
1000 W. DUNCAN
No. C-39514
Exp. 12/31/2015
CIVIL
STATE OF CALIFORNIA

AS-BUILT
08/01/14

Don't Dig...Until You Call U.S.A. Toll Free
1-800-227-2600
for the location of buried utility lines.
Don't disrupt vital services.
TWO WORKING DAYS BEFORE YOU DIG

PLANS PREPARED BY:
AECOM
901 VIA PIEMONTE
ONTARIO, CA 91764
(909) 579-3050

REGISTERED PROFESSIONAL ENGINEER
ROBERT PRICE
No. C56855
Exp. 6/30/13
CIVIL
STATE OF CALIFORNIA

MARK	REVISIONS	APPR	DATE
AS-BUILT	REVISED AS NOTED	TD	8/01/14

DESIGN BY R.A.P. DRAWN BY R.A./M.A. CHECKED BY M.C./A.S.

IOWA AVENUE
GRADE SEPARATION

ABUTMENT LAYOUT

DWG NO. R-4237
S-06
SHEET 82 OF 133

SCALE: AS SHOWN

AS-BUILT

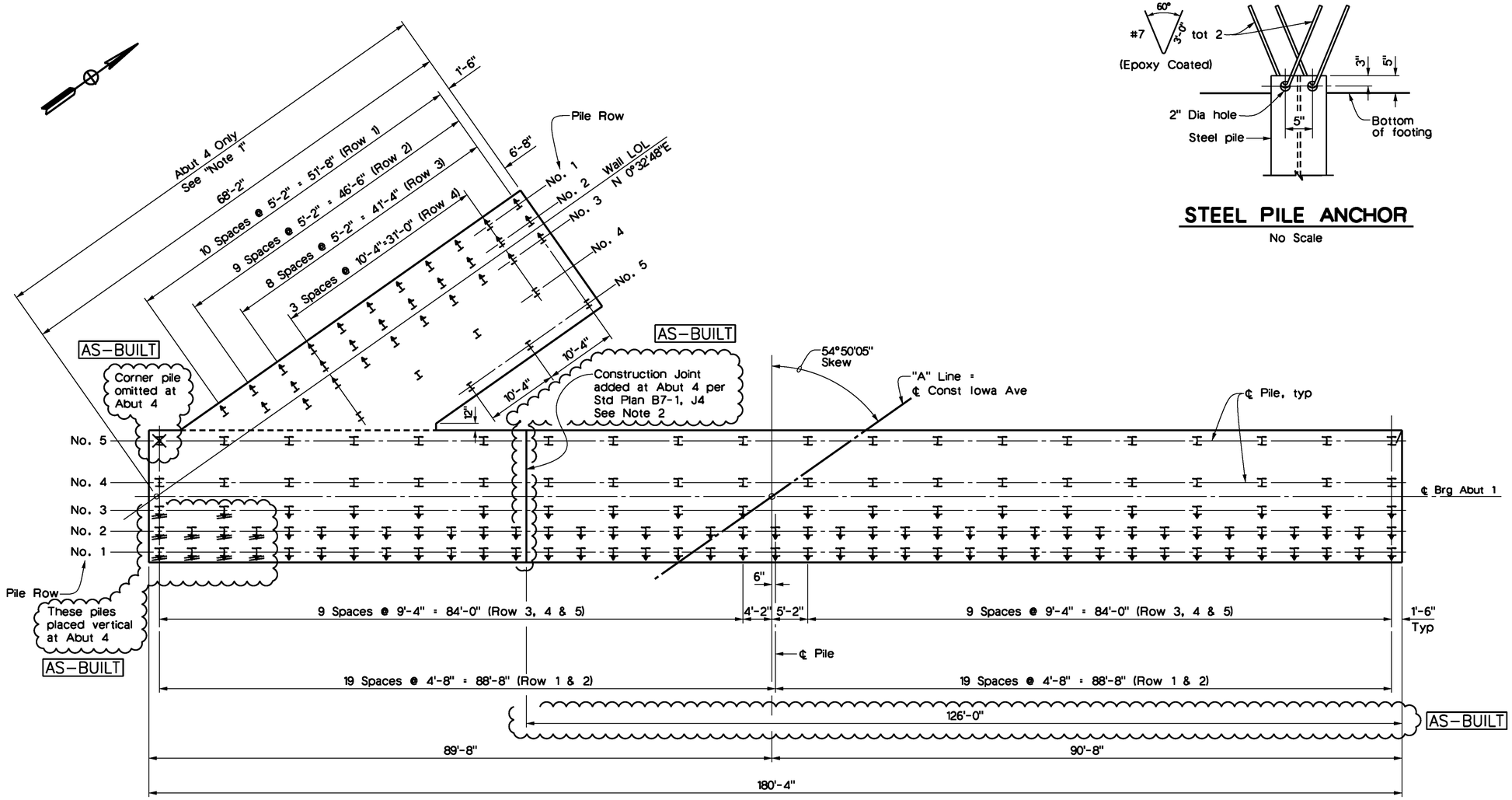

STEEL PILE ANCHOR

No Scale

ABUTMENT 4 PILE LAYOUT

1/8" = 1'-0"

(Abutment 4 shown, Abutment 1 similar except as noted)

LEGEND

I Indicates Vertical Piles

I Indicates Battered Piles (1:3)

REGISTERED PROFESSIONAL ENGINEER TODD W. DUDLEY No. C-39514 Exp. 12/31/2015 CIVIL STATE OF CALIFORNIA

AS-BUILT
08/01/14

Notes:

1. For pile & footing layout at Abutment 1, Ret Wall No. 5, see "Abutment Details No. 3" sheets.
2. Lap splices for top and bottom reinforcement placed parallel to the centerline of the abutment shall be located as follows:
   Top bars - In between piles
   Bottom bars - Over the piles

AS-BUILT

Don't Dig...Until You Call U.S.A. Toll Free 1-800-227-2600 for the location of buried utility lines. Don't disrupt vital services.
TWO WORKING DAYS BEFORE YOU DIG

PLANS PREPARED BY:
AECOM
901 VIA PIEMONTE
ONTARIO, CA 91764
(909) 579-3050

REGISTERED PROFESSIONAL ENGINEER ROBERT PRICE No. C56855 Exp. 6/30/13 CIVIL STATE OF CALIFORNIA

MARK	REVISIONS	APPR	DATE
AS-BUILT	REVISED AS NOTED	TD	8/01/14

DESIGN BY R.A.P. DRAWN BY R.A./M.A. CHECKED BY M.C./A.S.

IOWA AVENUE
GRADE SEPARATION
ABUTMENT PILE LAYOUT

DWG NO. R-4237
S-07
SHEET 83 OF 133
SCALE: AS SHOWN

AS-BUILT

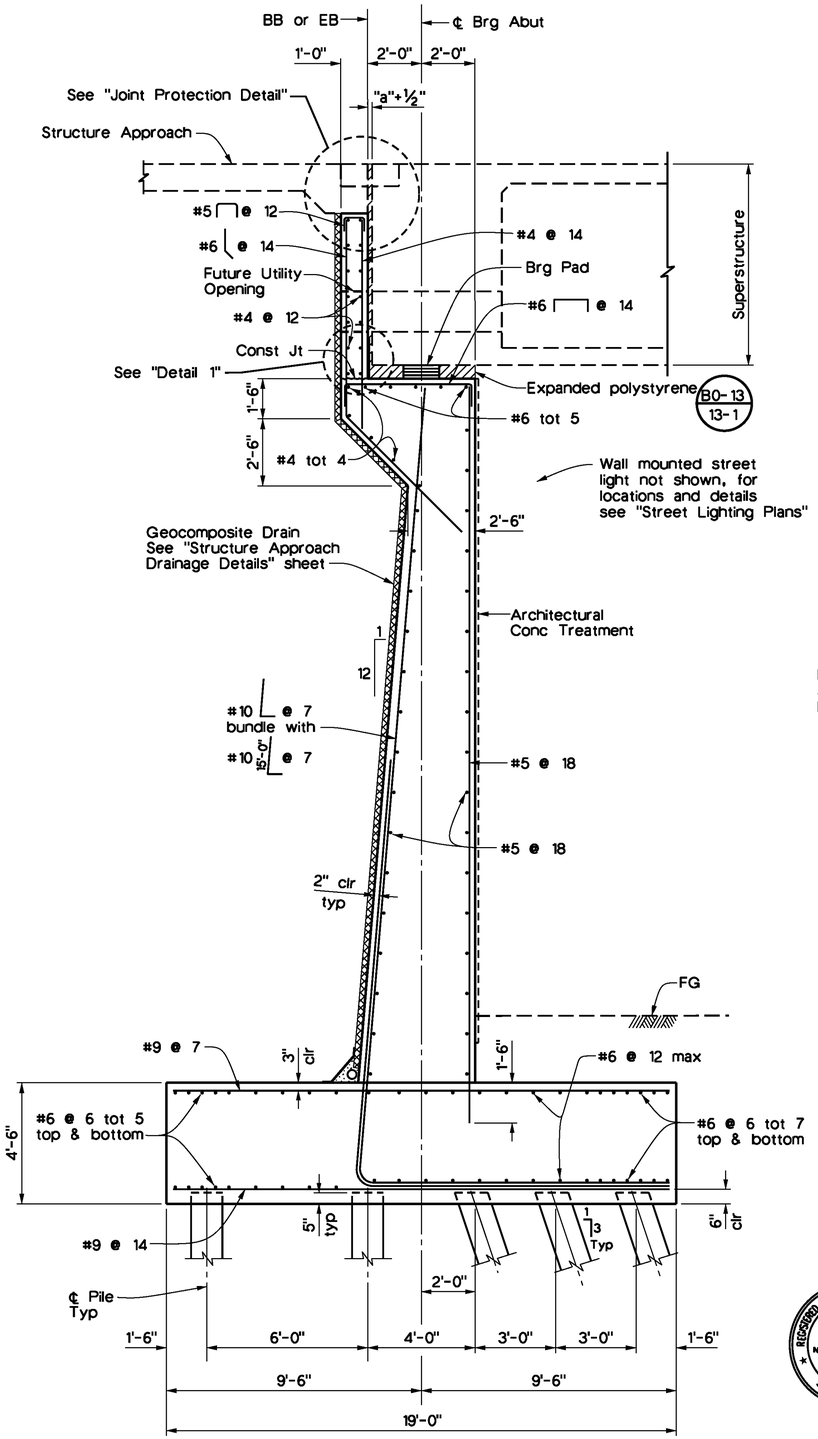

ABUTMENT SECTION

3/8" = 1'-0"

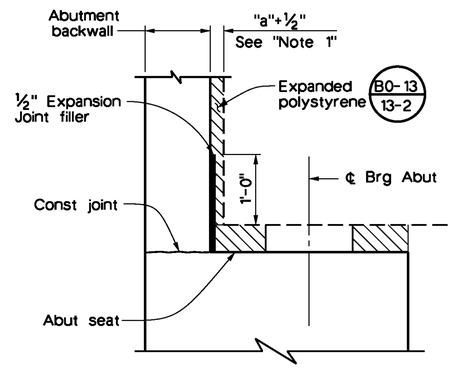

DETAIL 1

No Scale

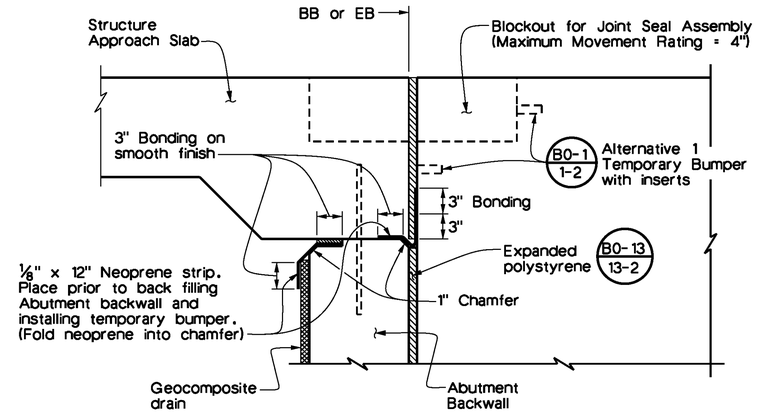

JOINT PROTECTION DETAIL

No Scale

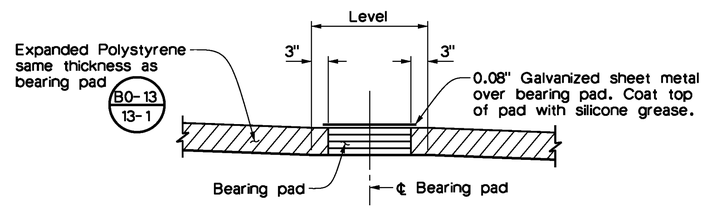

SECTION A-A

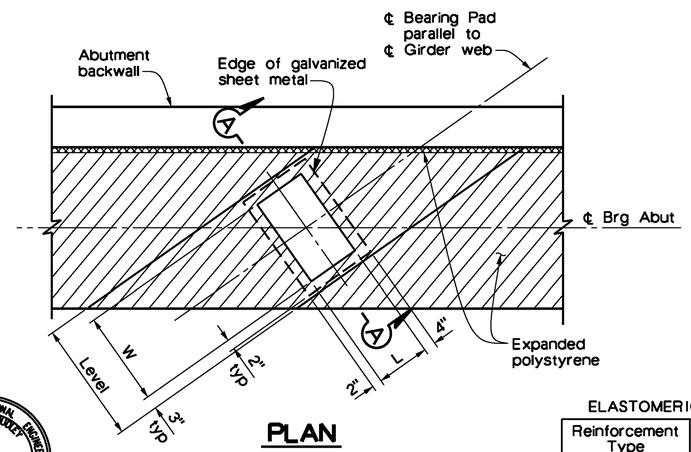

PLAN

BEARING PAD DETAIL

No Scale

ELASTOMERIC BEARING PAD TABLE

Reinforcement Type	W	L	Thickness
Fabric	28"	16"	5"
Steel	24"	16"	5"

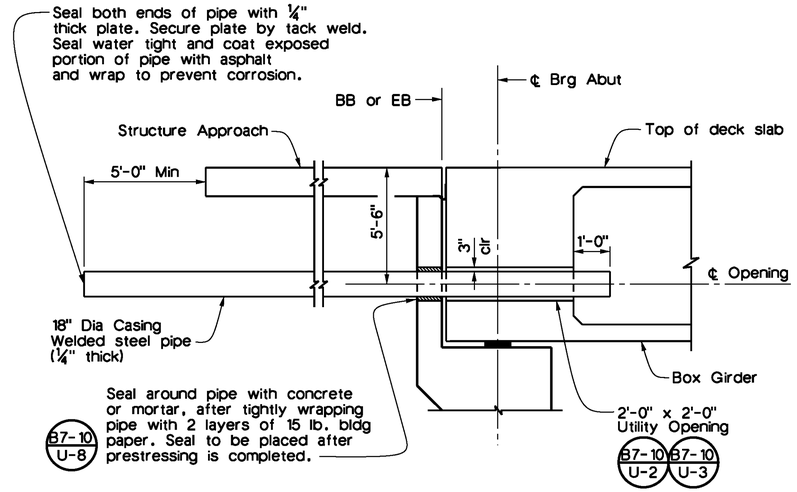

FUTURE UTILITY OPENING AT ABUTMENT

No Scale

Note:
For Utility Opening reinf at Abutment backwall, see B7-10 U-2

Notes:

1. For "a" dimension, see "Joint Seal Assembly (Maximum Movement Rating = 4")" sheet.
2. Remove expanded polystyrene minimum 6" from all exposed surfaces.

RICHARD WOOD DUDLEY PROFESSIONAL ENGINEER No. C-39514 Exp. 12/31/2015 CIVIL STATE OF CALIFORNIA

AS-BUILT 08/01/14

Don't Dig...Until You Call U.S.A. Toll Free 1-800-227-2600 for the location of buried utility lines. Don't disrupt vital services. TWO WORKING DAYS BEFORE YOU DIG

PLANS PREPARED BY: AECOM 901 VIA PIEMONTE ONTARIO, CA 91764 (909) 579-3050

REGISTERED PROFESSIONAL ENGINEER ROBERT PRICE No. C56855 Exp. 6/30/13 CIVIL STATE OF CALIFORNIA

MARK	REVISIONS	APPR	DATE
AS-BUILT	REVISED AS NOTED	TD	8/01/14

DESIGN BY R.A.P. DRAWN BY R.A./M.A. CHECKED BY M.C./A.S.

IOWA AVENUE GRADE SEPARATION

ABUTMENT DETAILS No. 1

DWG NO. R-4237
S-08
SHEET 84 OF 133
SCALE: AS SHOWN

AS-BUILT

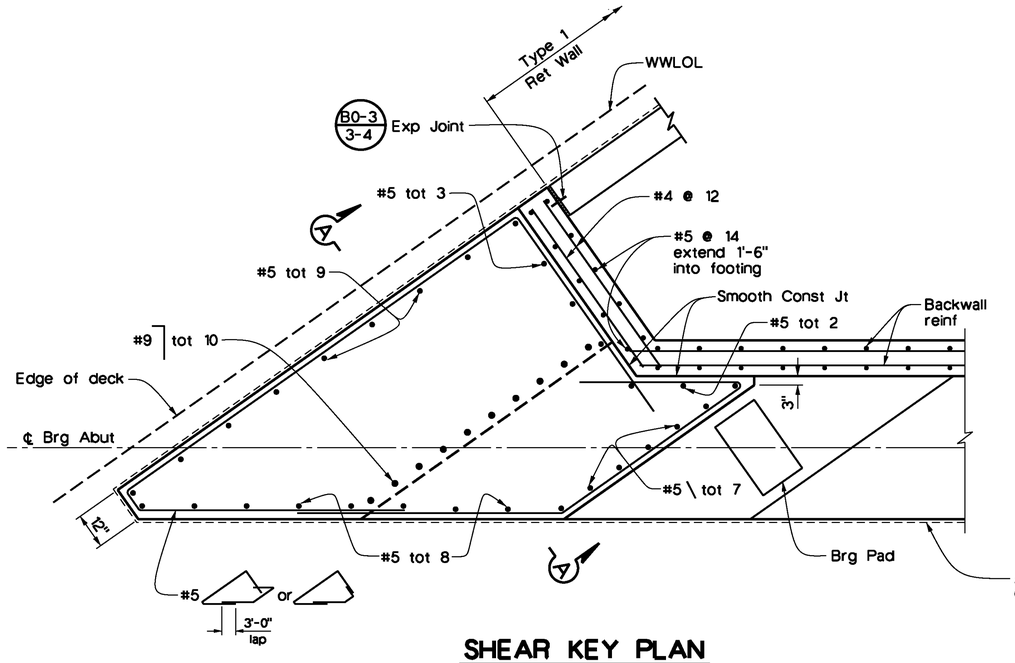

SHEAR KEY PLAN

½" = 1'-0"
(Abut 1 RT & Abut 4 LT)

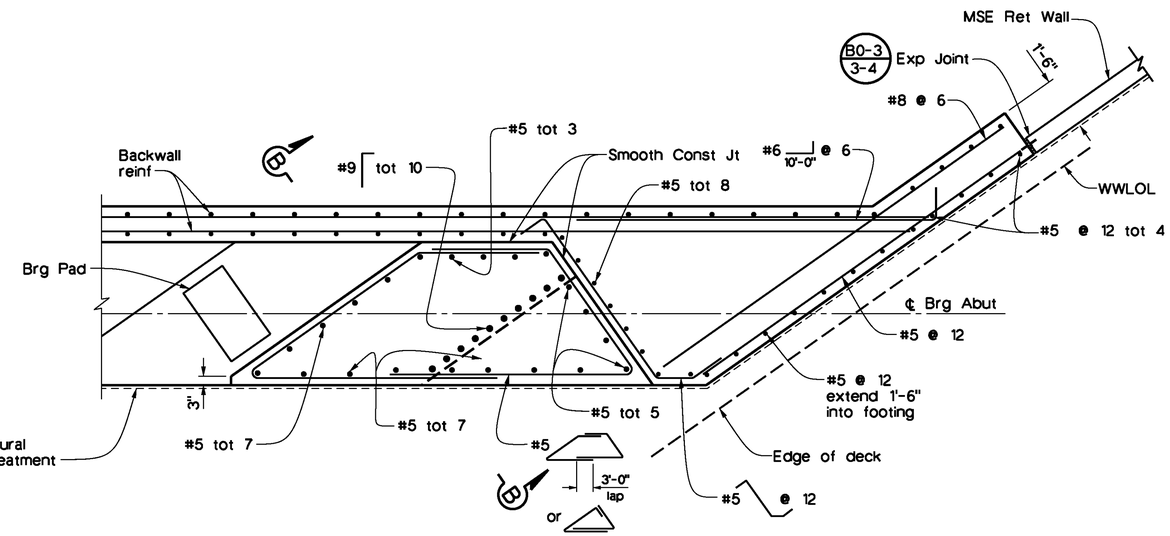

SHEAR KEY PLAN

½" = 1'-0"
(Abut 1 LT & Abut 4 RT)

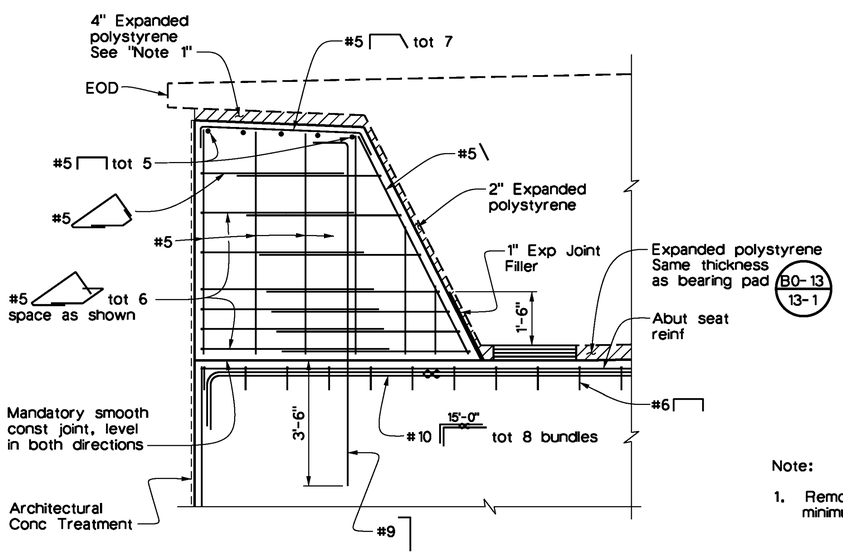

SECTION A-A

½" = 1'-0"

Note:

1. Remove expanded polystyrene minimum 6" from all exposed surfaces.

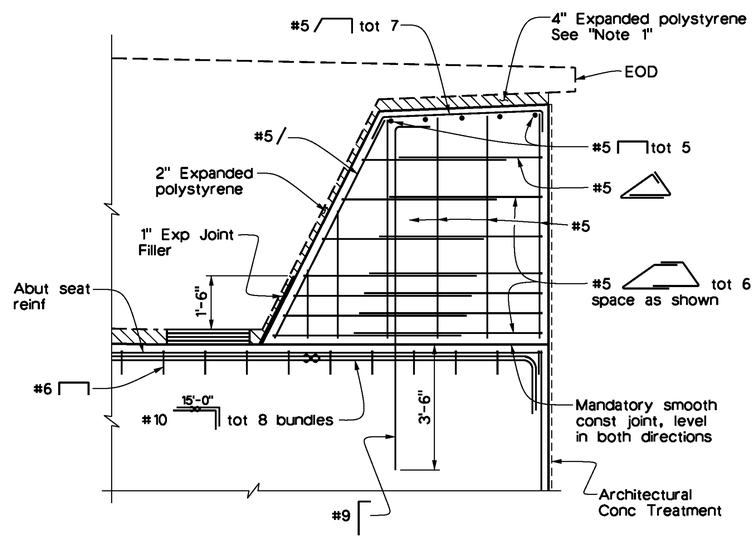

SECTION B-B

½" = 1'-0"

RICHARD TODD W. DUDLEY PROFESSIONAL ENGINEER No. C-39514 Exp. 12/31/2015 CIVIL STATE OF CALIFORNIA

AS-BUILT
08/01/14

Don't Dig...Until You Call U.S.A. Toll Free
1-800-227-2600
for the location of buried utility lines.
Don't disrupt vital services.
TWO WORKING DAYS BEFORE YOU DIG

PLANS PREPARED BY:
AECOM
901 VIA PIEMONTE
ONTARIO, CA 91764
(909) 579-3050

REGISTERED PROFESSIONAL ENGINEER ROBERT PRICE No. C56855 Exp. 6/30/13 CIVIL STATE OF CALIFORNIA

MARK	REVISIONS	APPR	DATE
AS-BUILT	REVISED AS NOTED	TD	8/01/14

DESIGN BY R.A.P. DRAWN BY R.A./M.A. CHECKED BY M.C./A.S.

IOWA AVENUE
GRADE SEPARATION

ABUTMENT DETAILS No. 2

DWG NO. R-4237
S-09
SHEET 85 OF 133
SCALE: AS SHOWN

AS-BUILT

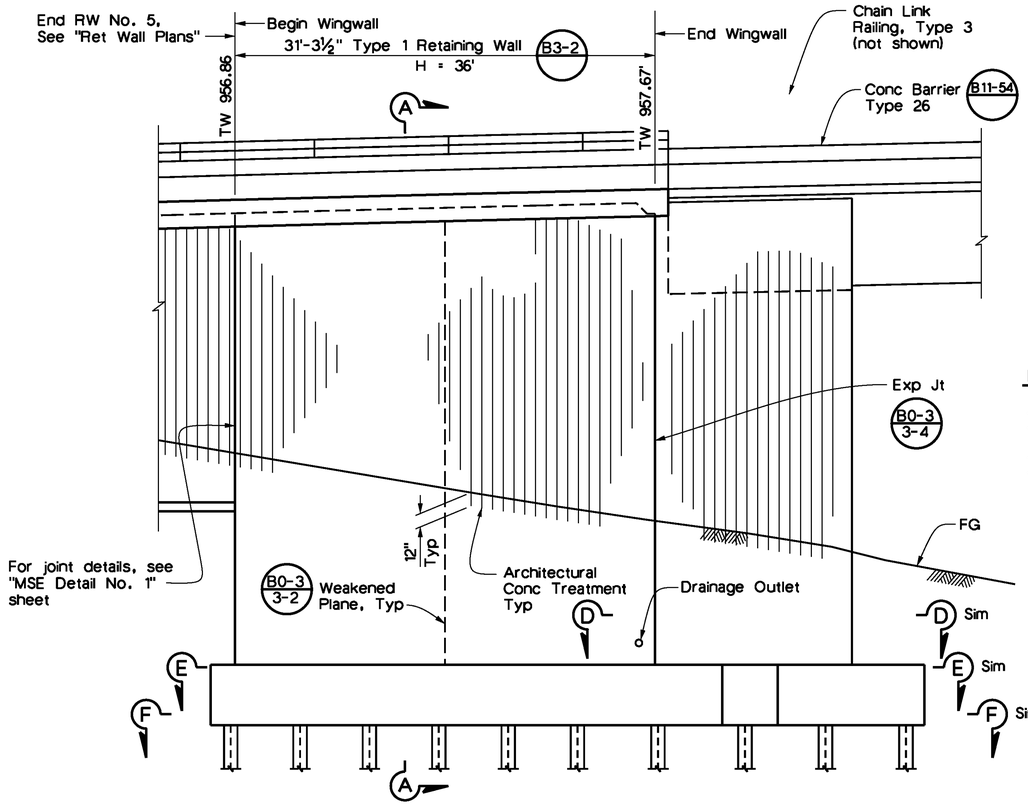

ABUT 1 RT WING WALL ELEVATION B3-2

3/16" = 1'-0"

LEGEND

I Indicates Vertical Piles

Indicates Battered Piles (1:3)

Notes:

1. For Section A-A, see "Abutment Details No. 4" sheet.
2. For Sections D-D, E-E & F-F, see "Abutment Details No. 5" sheet.

XXX.XX Indicates bottom of Footing Elevation

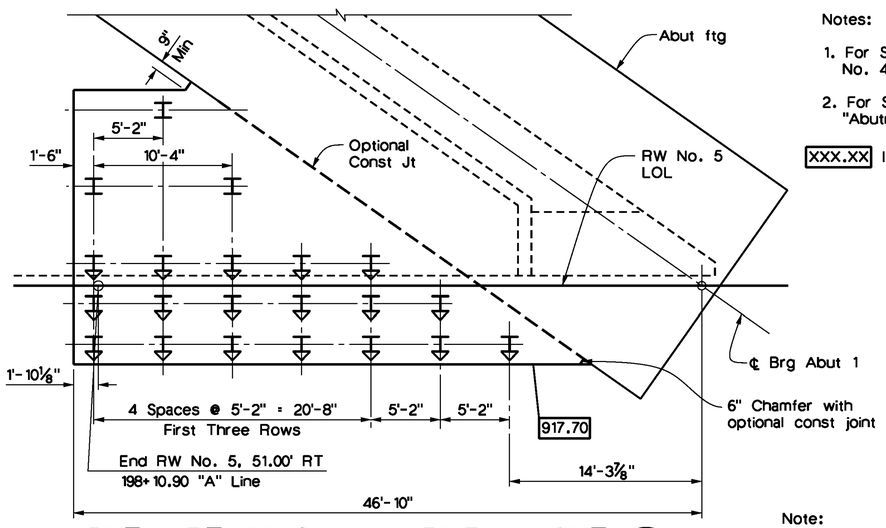

ABUT 1 RT WING WALL PILE LAYOUT B3-2

3/16" = 1'-0"

Note:

Pile spacing is measured along the RWLOL.

Notes:

1. For information not shown, see Caltrans Standard Plans B3-2.
2. For Architectural Treatment details, see "Retaining Wall Architectural Details" sheets.
3. For Barrier Slab details, see "MSE Detail No. 2" sheet in "Retaining Wall Plans".
4. For Approach Slab details, see "Structure Approach Type N(30S)" sheet.
5. Connect the low end of plastic pipe to the main outlet pipe as applicable.

Notes (cont'd):

6. 4"Ø Plastic down drains at intermediate sag points and at 25' max center to center (9' c-c for Type 3 and 9'-3" c-c for Type 4 retaining walls). For walls adjacent to sidewalks or curbs, provide 4" cast iron or asbestos cement pipe under the sidewalk to discharge through curb face. Exposed wall drains shall be located 3"± above finished grade. See "Abutment Layout" sheet.
7. Bends and junctions in 3"Ø plastic pipe are 2'-7½"Ø radius min.
8. Geocomposite drain, cement treated permeable base, and 3"Ø slotted plastic pipe are continuous behind Abutment, Wingwalls and Retaining Walls. Provide "Tee" connection at each 4"Ø drain pipe.
9. Apply Anti-Graffiti Coating on exposed vertical surfaces of Walls, Barrier Slab/Approach Slab and Barrier.

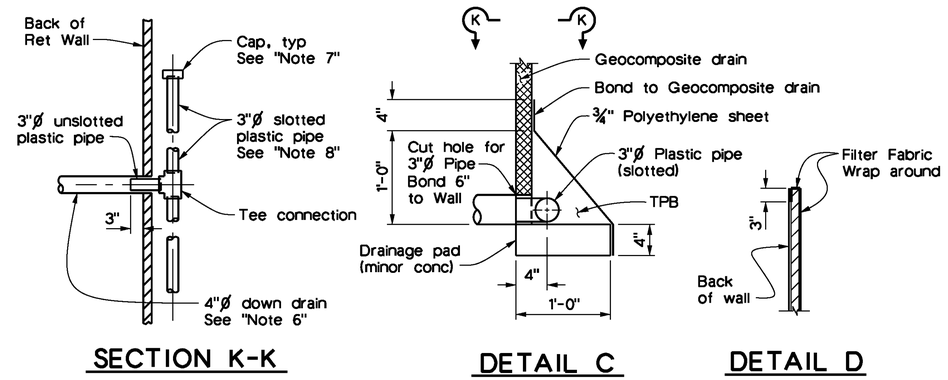

SECTION K-K

DETAIL C

DETAIL D

WEEP HOLE AND GEOCOMPOSITE DRAIN

No Scale

Alternative to Bridge Detail B0-3 / 3-1

REGISTERED PROFESSIONAL ENGINEER
TODD W. DUDLEY
No. C-39514
Exp. 12/31/2015
CIVIL
STATE OF CALIFORNIA

AS-BUILT
08/01/14

Don't Dig...Until You Call U.S.A. Toll Free
1-800-227-2600
for the location of buried utility lines.
Don't disrupt vital services.
TWO WORKING DAYS BEFORE YOU DIG

PLANS PREPARED BY:
AECOM
901 VIA PIEMONTE
ONTARIO, CA 91764
(909) 579-3050

REGISTERED PROFESSIONAL ENGINEER
ROBERT PRICE
No. C36855
Exp. 6/30/13
CIVIL
STATE OF CALIFORNIA

MARK	REVISIONS	APPR	DATE
AS-BUILT	REVISED AS NOTED	TD	8/01/14

DESIGN BY R.A.P. DRAWN BY R.A./M.A. CHECKED BY M.C./A.S.

IOWA AVENUE
GRADE SEPARATION
ABUTMENT DETAILS NO. 3

DWG NO. R-4237
S-10
SHEET 86 OF 133
SCALE: AS SHOWN

AS-BUILT

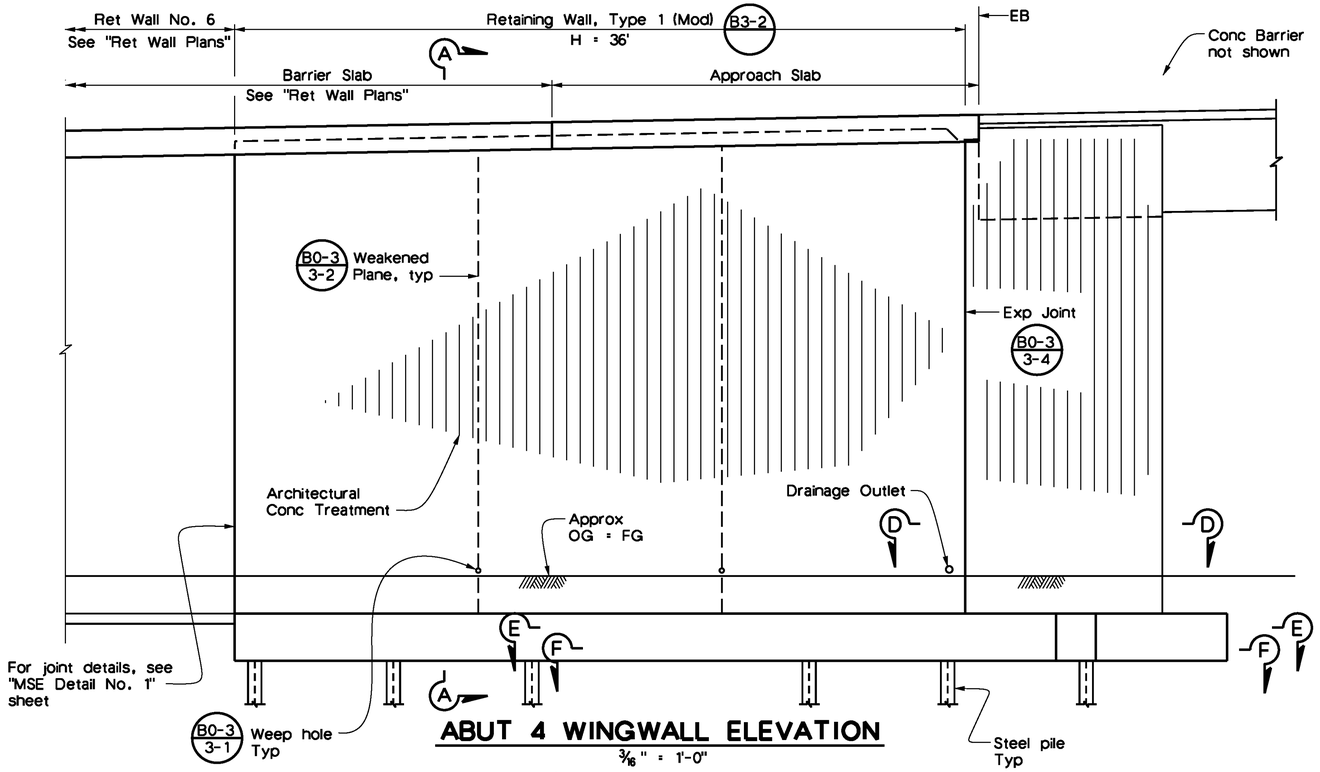

ABUT 4 WINGWALL ELEVATION

3/16" = 1'-0"

Note: All piles not shown.

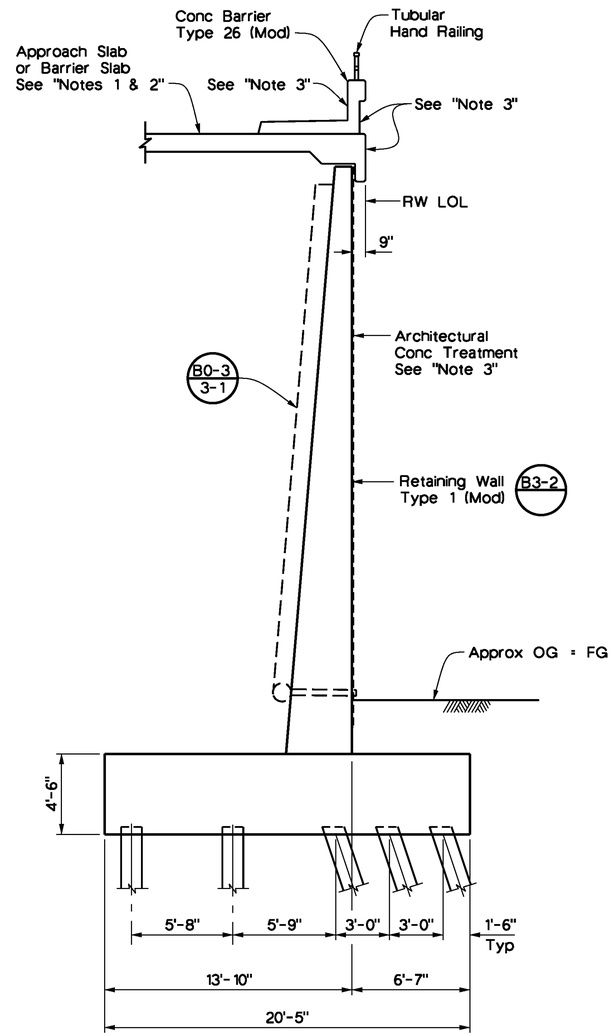

SECTION A-A

1/4" = 1'-0"

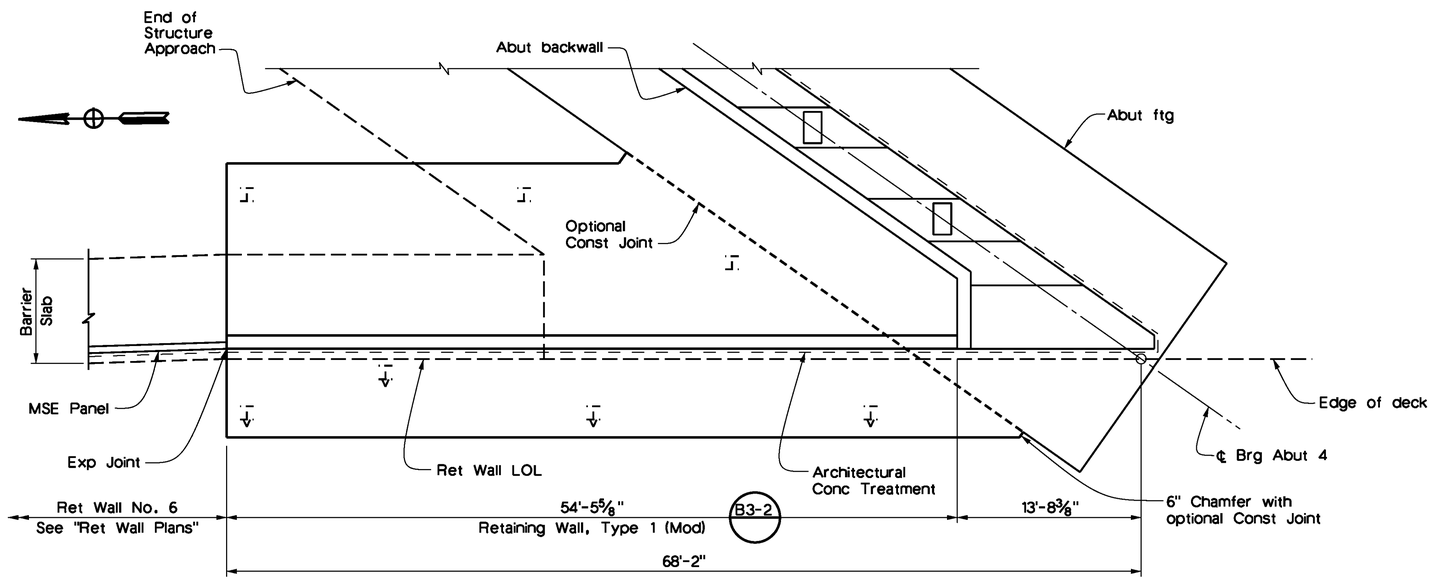

ABUT 4 WINGWALL PLAN

3/16" = 1'-0"

Note: All piles not shown.

RECORDED PROFESSIONAL ENGINEER TODD W. DUDLEY No. C-39514 Exp. 12/31/2015 CIVIL STATE OF CALIFORNIA

AS-BUILT 08/01/14

Notes:

1. For Barrier Slab details, see "MSE Detail No. 2" sheet.
2. For Approach Slab details, see "Structure Approach Type N(30S)" sheet.
3. Apply Anti-Graffiti Coating to exposed surfaces of Walls and Barriers.
4. For "Sections D-D, E-E & F-F", see "Abutment Details No. 5" sheet.

Don't Dig...Until You Call U.S.A. Toll Free 1-800-227-2600 for the location of buried utility lines. Don't disrupt vital services. TWO WORKING DAYS BEFORE YOU DIG

PLANS PREPARED BY:
AECOM
901 VIA PIEMONTE
ONTARIO, CA 91764
(909) 579-3050

REGISTERED PROFESSIONAL ENGINEER ROBERT PRICE No. C56855 Exp. 6/30/13 CIVIL STATE OF CALIFORNIA

MARK	REVISIONS	APPR	DATE
AS-BUILT	REVISED AS NOTED	TD	8/01/14

DESIGN BY R.A.P. DRAWN BY R.A./M.A. CHECKED BY M.C./A.S.

IOWA AVENUE
GRADE SEPARATION
ABUTMENT DETAILS NO. 4

DWG NO. R-4237
S-11
SHEET 87 OF 133
SCALE: AS SHOWN

AS-BUILT

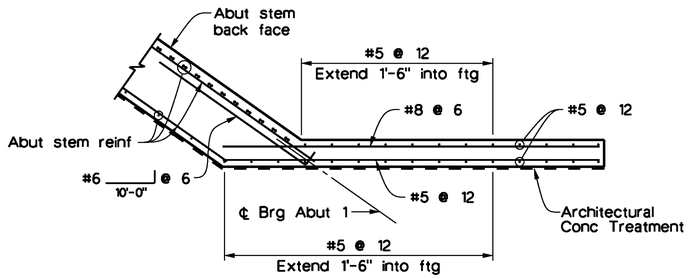

SECTION C-C

3/8" = 1'-0"
(Abut 1 shown, Abut 4 similar)

Notes:

1. For information not shown, see Standard Plans B3-1 & B3-2.
2. Place Wingwall reinforcement between Abutment Footing reinforcement to avoid conflict.
3. Place 6" chamfer if construction joint is used. Bend edge of footing reinf as shown.

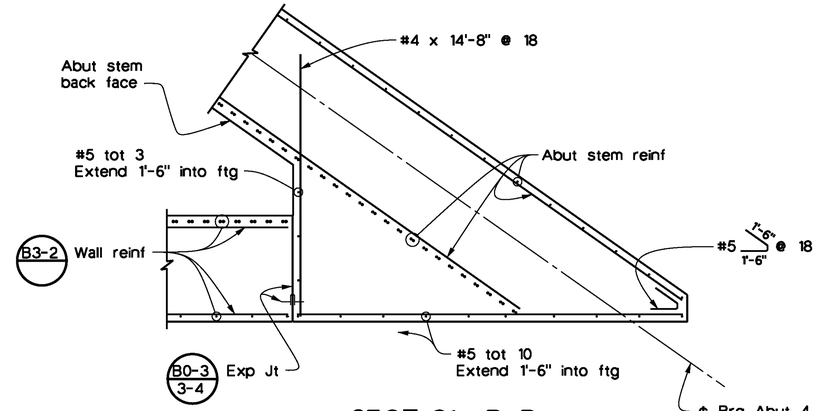

SECTION D-D

3/8" = 1'-0"
(Abut 1 shown, Abut 4 similar)

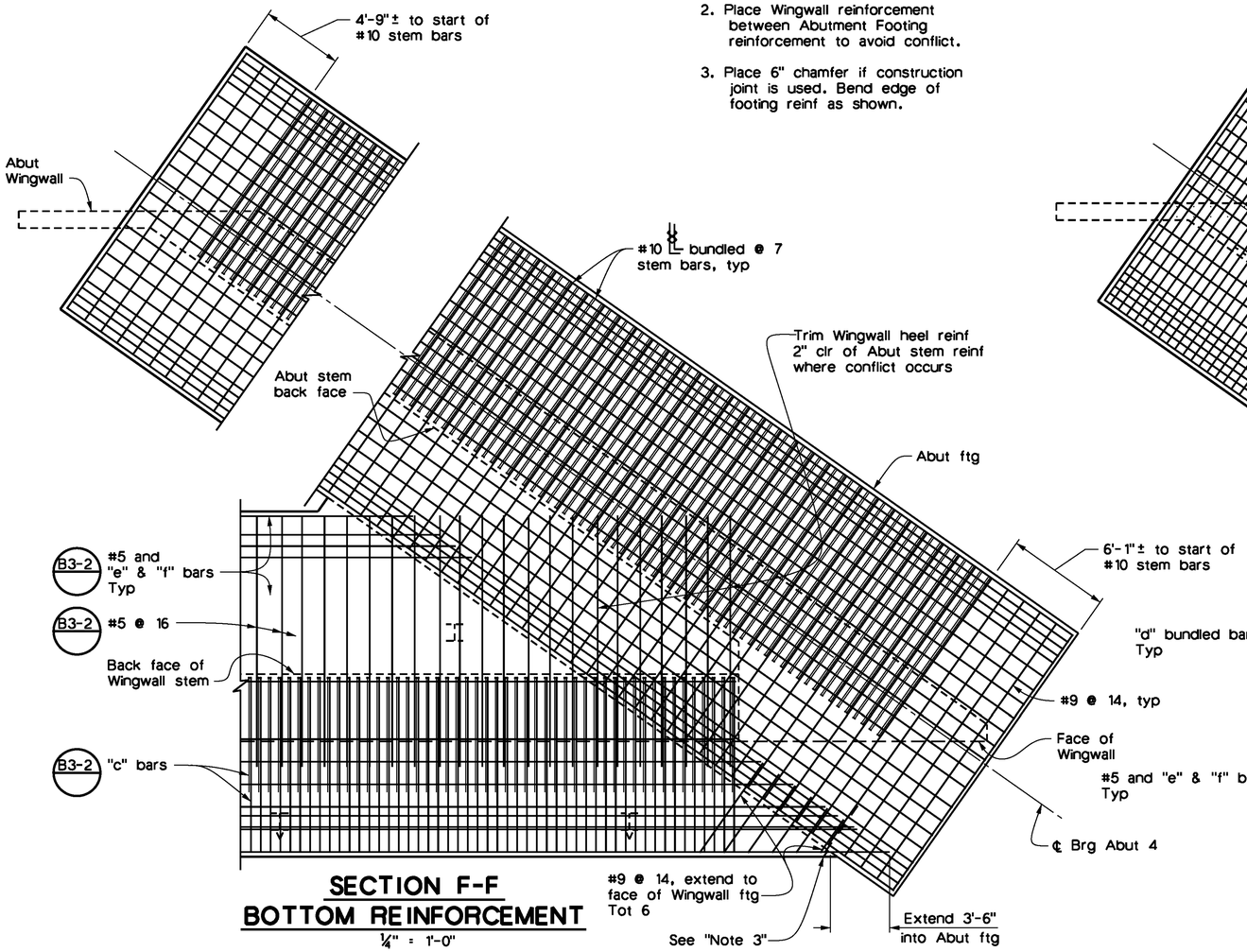

SECTION F-F
BOTTOM REINFORCEMENT

1/4" = 1'-0"

Notes: All piles not shown.
(Abutment 4 shown,
Abutment 1 similar)

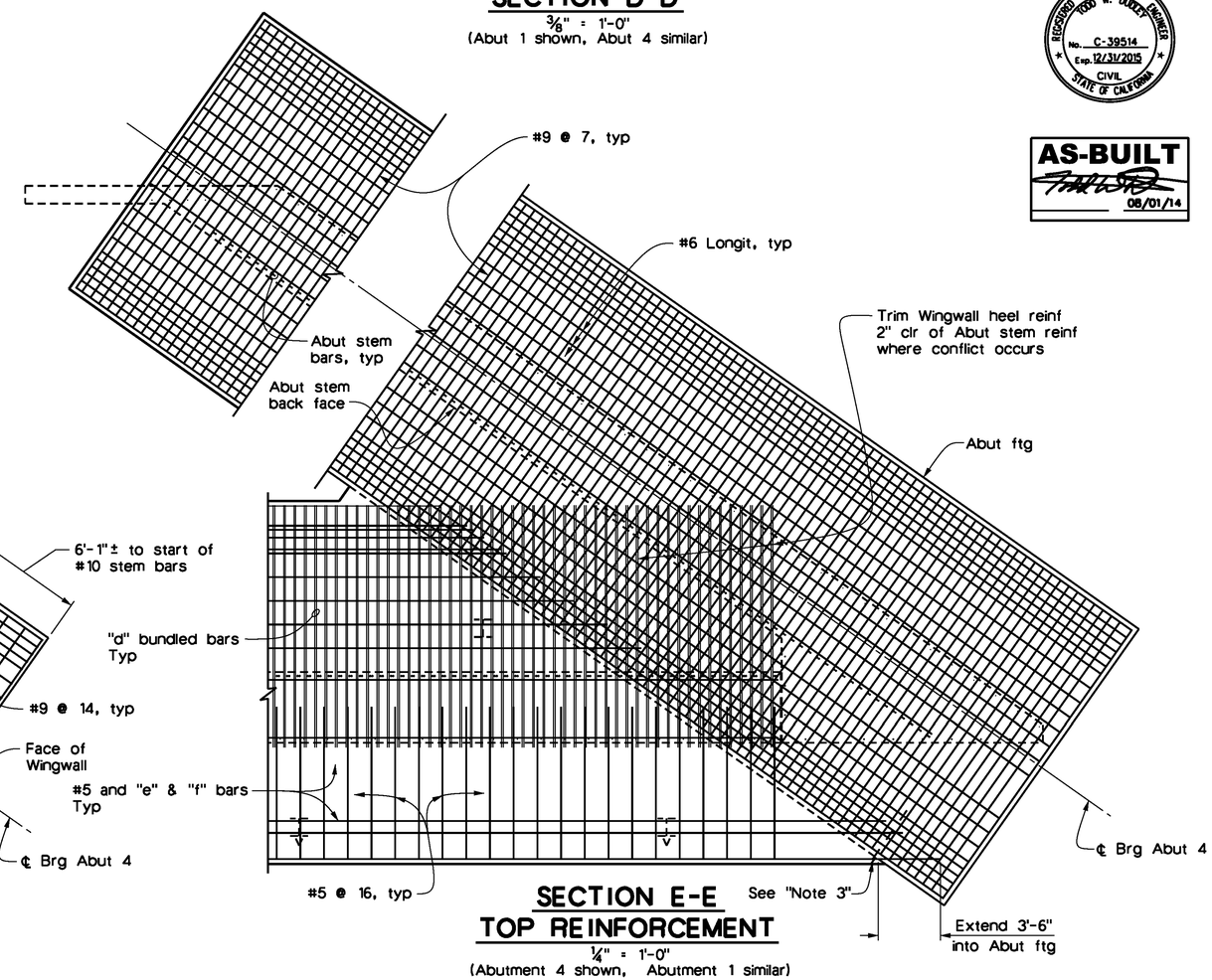

SECTION E-E
TOP REINFORCEMENT

1/4" = 1'-0"
(Abutment 4 shown, Abutment 1 similar)

REGISTERED PROFESSIONAL ENGINEER
TODD W. DUDLEY
No. C-39514
Exp. 12/31/2015
CIVIL
STATE OF CALIFORNIA

AS-BUILT
08/01/14

Don't Dig...Until You Call U.S.A. Toll Free
1-800-227-2600
for the location of buried utility lines.
Don't disrupt vital services.
TWO WORKING DAYS BEFORE YOU DIG

PLANS PREPARED BY:
AECOM
901 VIA PIEMONTE
ONTARIO, CA 91764
(909) 579-3050

REGISTERED PROFESSIONAL ENGINEER
ROBERT PRICE
No. C56855
Exp. 6/30/13
CIVIL
STATE OF CALIFORNIA

MARK	REVISIONS	APPR	DATE
AS-BUILT	REVISED AS NOTED	TD	8/01/14

DESIGN BY R.A.P. DRAWN BY R.A./M.A. CHECKED BY M.C./A.S.

IOWA AVENUE
GRADE SEPARATION
ABUTMENT DETAILS No. 5

DWG NO. R-4237
S-12
SHEET 88 OF 133
SCALE: AS SHOWN

AS-BUILT

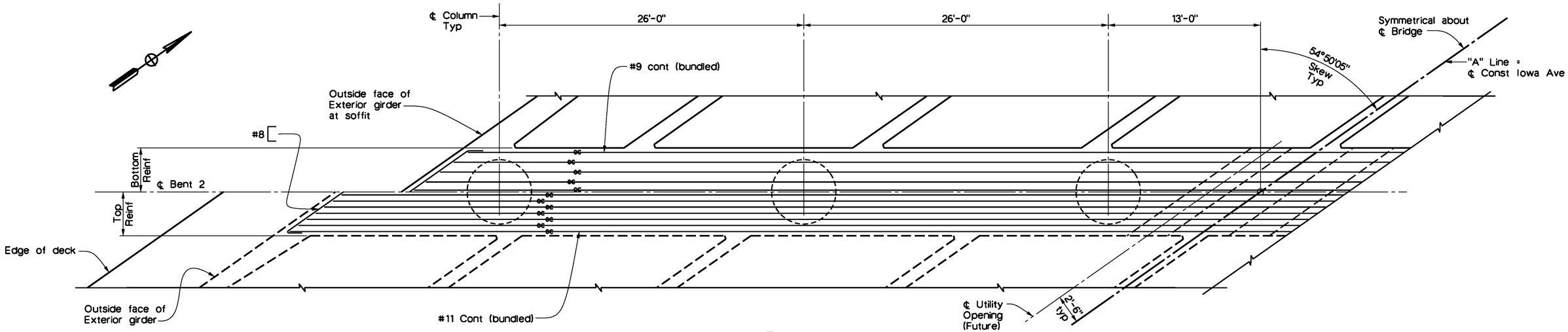

PLAN

1/4" = 1'-0"
(Bent 2 shown, Bent 3 similar)

OC Indicates bundled bars

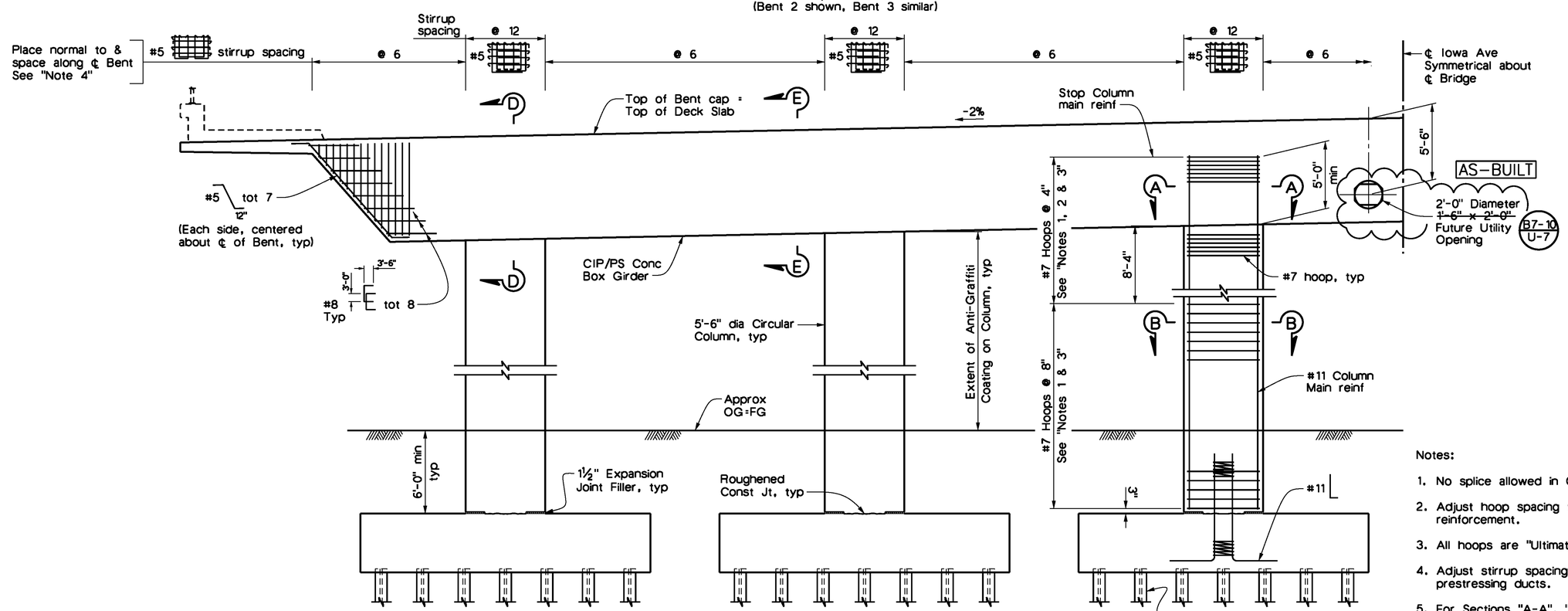

ELEVATION

1/4" = 1'-0"
(Bent 2 shown, Bent 3 similar)

REGISTERED PROFESSIONAL ENGINEER TODD W. DUDLEY No. C-39514 Exp. 12/31/2015 CIVIL STATE OF CALIFORNIA

AS-BUILT
08/01/14

Notes:

1. No splice allowed in Column Main reinforcement.
2. Adjust hoop spacing to clear Bent Cap bottom reinforcement.
3. All hoops are "Ultimate Butt Splice" connections.
4. Adjust stirrup spacing to avoid conflicts with prestressing ducts.
5. For Sections "A-A", "B-B", "D-D" & "E-E", see "Bent Details No. 1" sheet.
6. For Pile Layout and Footing Details, see "Bent Details No. 2" sheet.

Don't Dig...Until You Call U.S.A. Toll Free 1-800-227-2600 for the location of buried utility lines. Don't disrupt vital services.
TWO WORKING DAYS BEFORE YOU DIG

PLANS PREPARED BY:
AECOM
901 VIA PIEMONTE
ONTARIO, CA 91764
(909) 579-3050

REGISTERED PROFESSIONAL ENGINEER ROBERT PRICE No. C56855 Exp. 6/30/13 CIVIL STATE OF CALIFORNIA

MARK	REVISIONS	APPR	DATE
AS-BUILT	REVISED AS NOTED	TD	8/01/14

DESIGN BY R.A.P. DRAWN BY R.A./M.A. CHECKED BY M.C./A.S.

IOWA AVENUE
GRADE SEPARATION

BENT LAYOUT

DWG NO. R-4237
S-13
SHEET 89 OF 133
SCALE: AS SHOWN

AS-BUILT

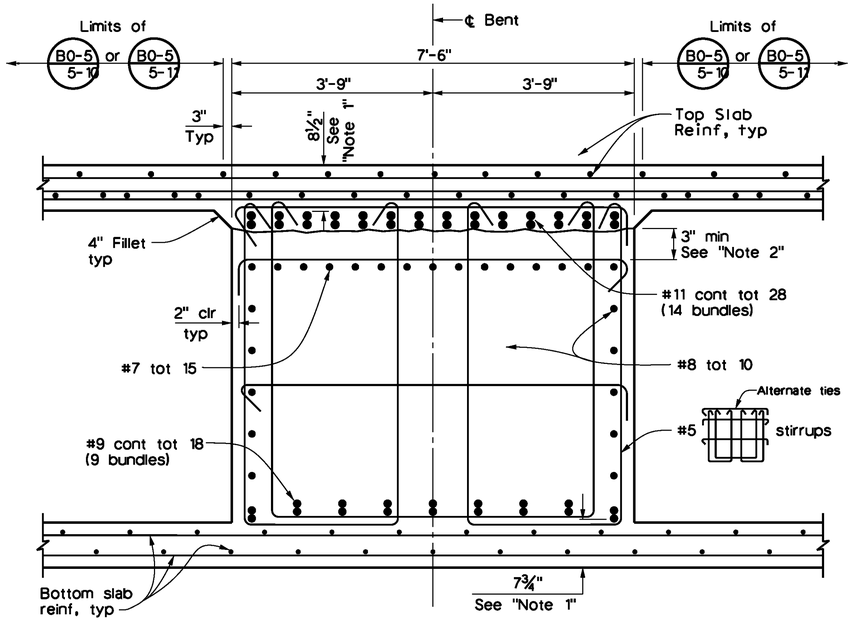

SECTION E-E
¾" = 1'-0"

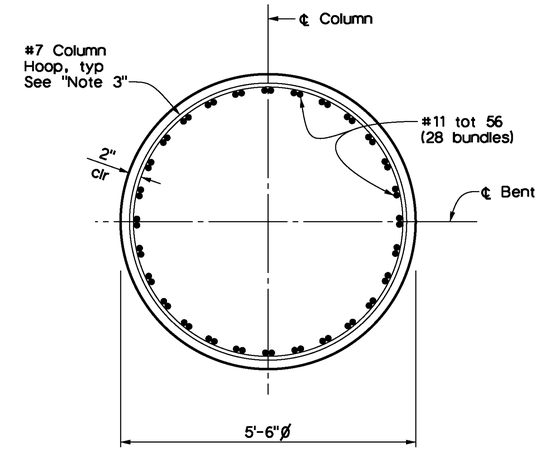

SECTION B-B
¾" = 1'-0"

LEGEND:

⌒ Indicates bundled bars

Notes:

1. Indicates clearance to main cap reinforcement.
2. Indicates clearance to construction reinforcement. Reinforcement may be adjusted as necessary to accommodate prestressing ducts as directed by the Engineer.
3. All hoops shall be "Ultimate" butt spliced.
4. Place #4 ⌉ within 5'-6" on either sides of ℄ column at same spacing as stirrups, tied around top longitudinal deck slab reinforcement. Total 36 each Column. Space @ 15" along ℄ Bent.
5. For Bent Cap stirrups, see "Bent Layout" sheet.

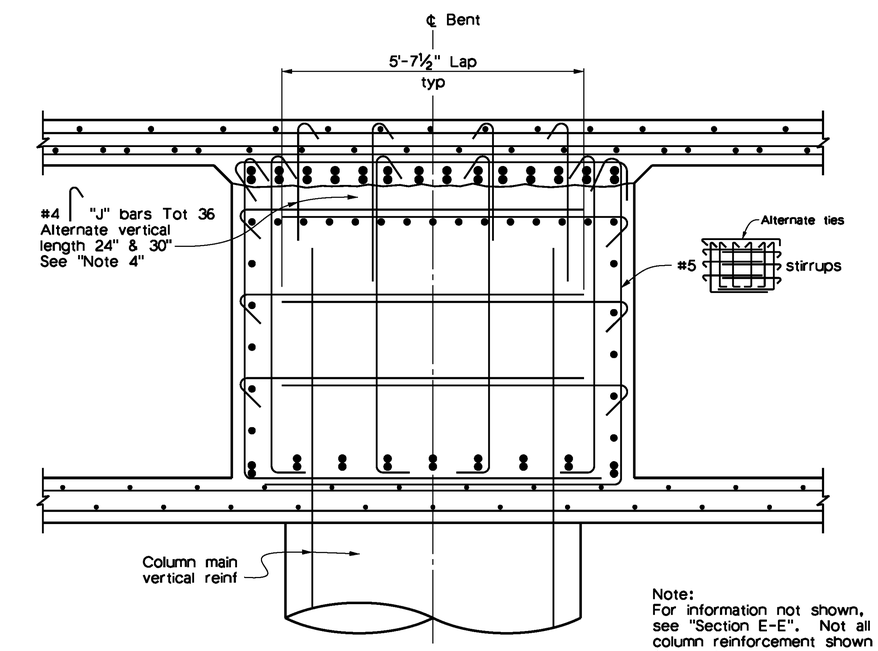

Note:
For information not shown, see "Section E-E". Not all column reinforcement shown for clarity.

SECTION D-D
¾" = 1'-0"

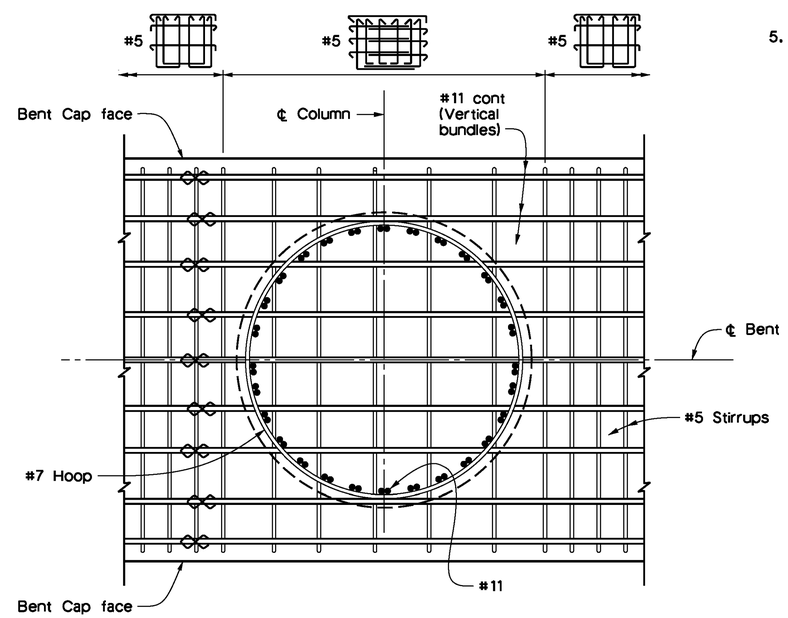

SECTION A-A
¾" = 1'-0"

REGISTERED PROFESSIONAL ENGINEER ROOD W. DUDLEY No. C-39514 Exp. 12/31/2015 CIVIL STATE OF CALIFORNIA

AS-BUILT 08/01/14

Don't Dig...Until You Call U.S.A. Toll Free 1-800-227-2600 for the location of buried utility lines. Don't disrupt vital services. TWO WORKING DAYS BEFORE YOU DIG

PLANS PREPARED BY:
AECOM
901 VIA PIEMONTE
ONTARIO, CA 91764
(909) 579-3050

REGISTERED PROFESSIONAL ENGINEER ROBERT PRICE No. C56855 Exp. 6/30/13 CIVIL STATE OF CALIFORNIA

MARK	REVISIONS	APPR	DATE
AS-BUILT	REVISED AS NOTED	TD	8/01/14

DESIGN BY R.A.P. DRAWN BY R.A./M.A. CHECKED BY M.C./A.S.

IOWA AVENUE
GRADE SEPARATION

BENT DETAILS No. 1

DWG NO. R-4237
S-14
SHEET 90 OF 133
SCALE: AS SHOWN

AS-BUILT

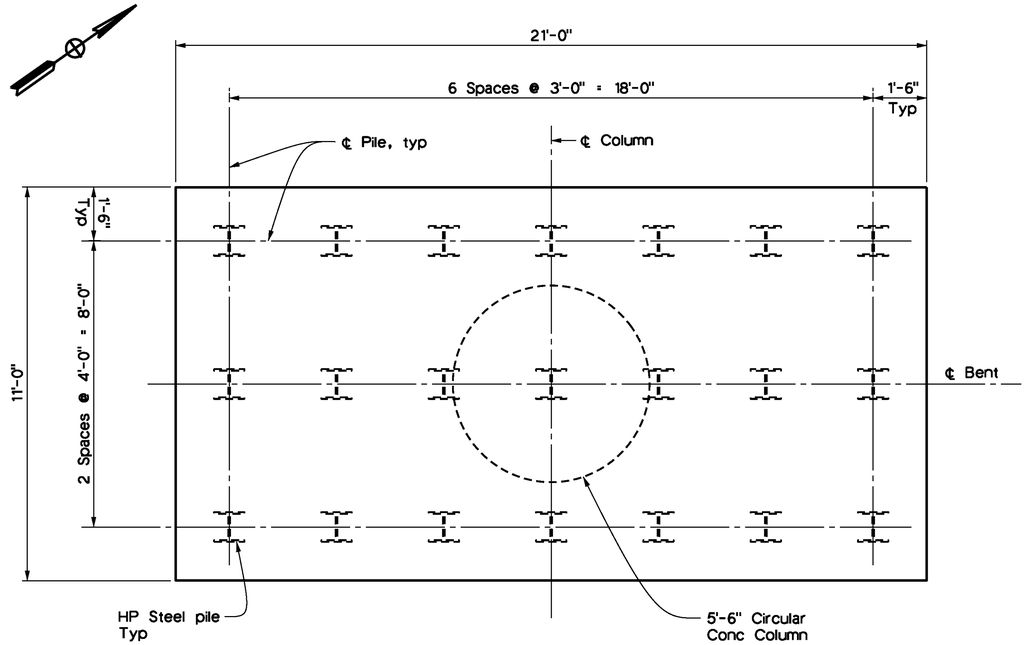

TYPICAL FOOTING PLAN
½" = 1'-0"

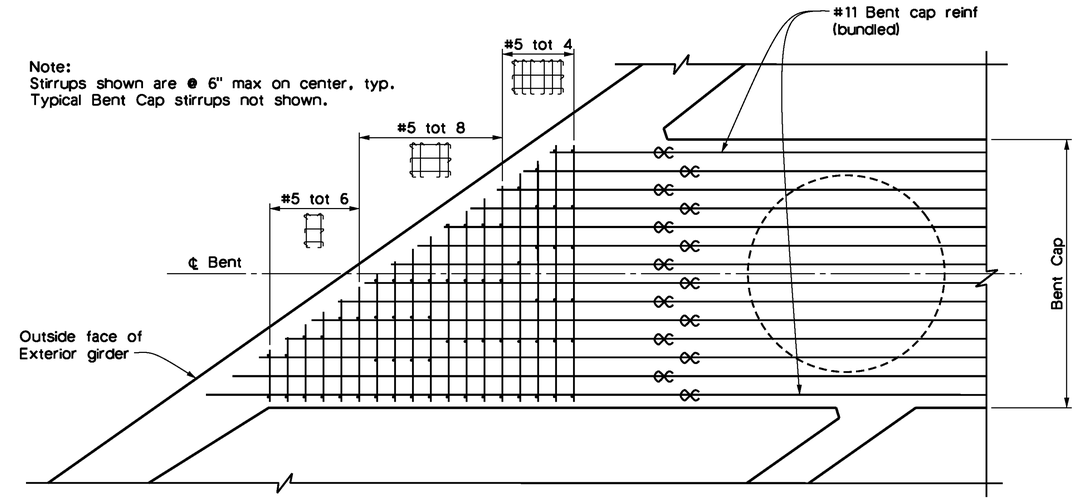

CORNER CAP REINFORCEMENT
½" = 1'-0"

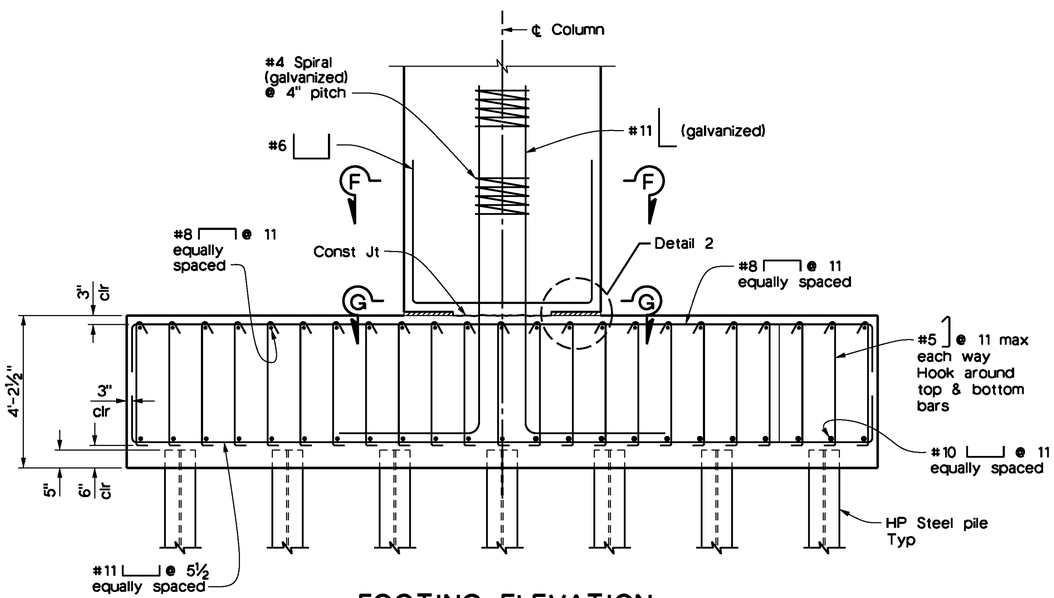

FOOTING ELEVATION
½" = 1'-0"

Note:
For steel pile anchor details, see "Abutment Pile Layout" sheet.

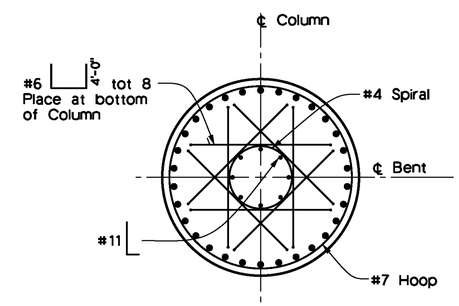

SECTION F-F
½" = 1'-0"

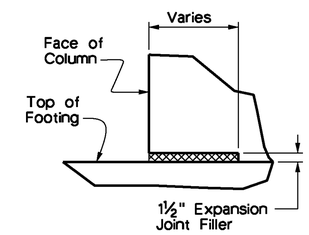

DETAIL 2
No Scale

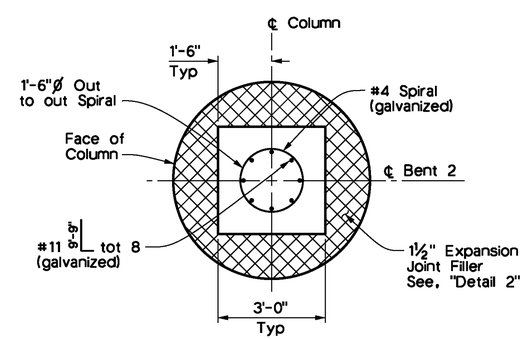

SECTION G-G
½" = 1'-0"

AS-BUILT
08/01/14

Don't Dig...Until You Call U.S.A. Toll Free 1-800-227-2600 for the location of buried utility lines. Don't disrupt vital services.
TWO WORKING DAYS BEFORE YOU DIG

PLANS PREPARED BY:
AECOM
901 VIA PIEMONTE
ONTARIO, CA 91764
(909) 579-3050

REGISTERED PROFESSIONAL ENGINEER ROBERT PRICE No. C56855 Exp. 6/30/13 CIVIL STATE OF CALIFORNIA

MARK	REVISIONS	APPR	DATE
AS-BUILT	REVISED AS NOTED	TD	8/01/14

DESIGN BY R.A.P. DRAWN BY R.A./M.A. CHECKED BY M.C./A.S.

IOWA AVENUE
GRADE SEPARATION

BENT DETAILS NO. 2

DWG NO. R-4237
S-15
SHEET 91 OF 133
SCALE: AS SHOWN

AS-BUILT

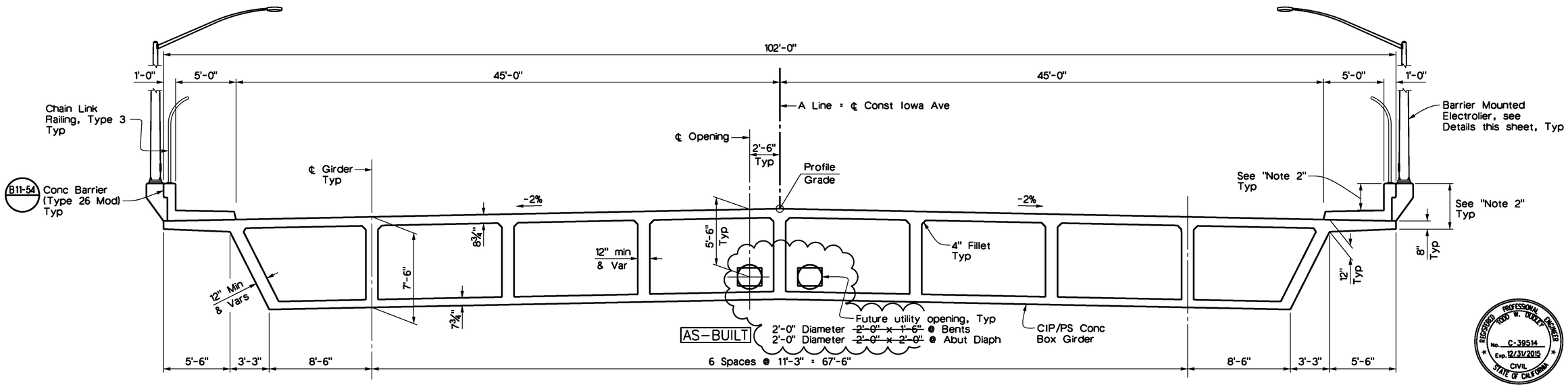

TypICAL SECTION

¼" = 1'-0"

REGISTERED PROFESSIONAL ENGINEER TODD W. DUDLEY No. C-39514 Exp. 12/31/2015 CIVIL STATE OF CALIFORNIA

AS-BUILT 08/01/14

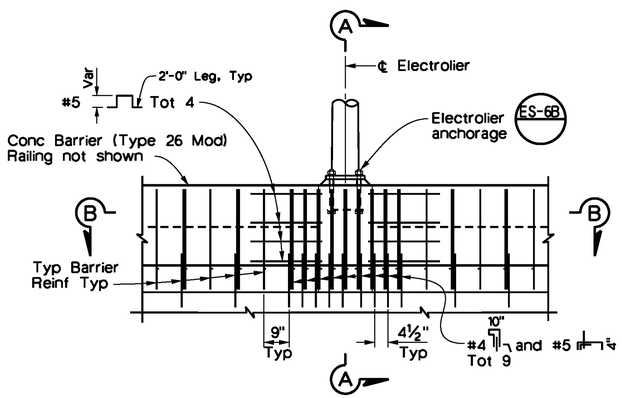

BARRIER ELEVATION AT PEDESTAL

½" = 1'-0"

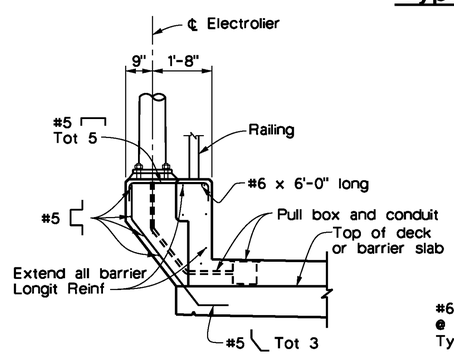

SECTION A-A

½" = 1'-0"

Note: Barrier Reinf not all shown Reinf shown is in addition to Typical Barrier Reinf.

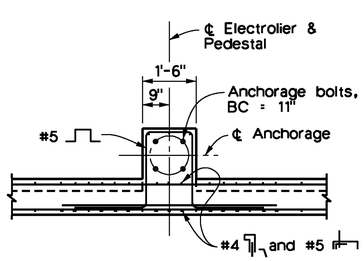

SECTION B-B

½" = 1'-0"

Notes:

1. For location of Additional reinf, see "Detail A" and "Detail B" on Girder Layout No. 1" & "Girder Layout No. 2" sheets.
2. Apply Anti-Graffiti Coating to exterior surface of Barrier and inside vertical surface of Parapet.

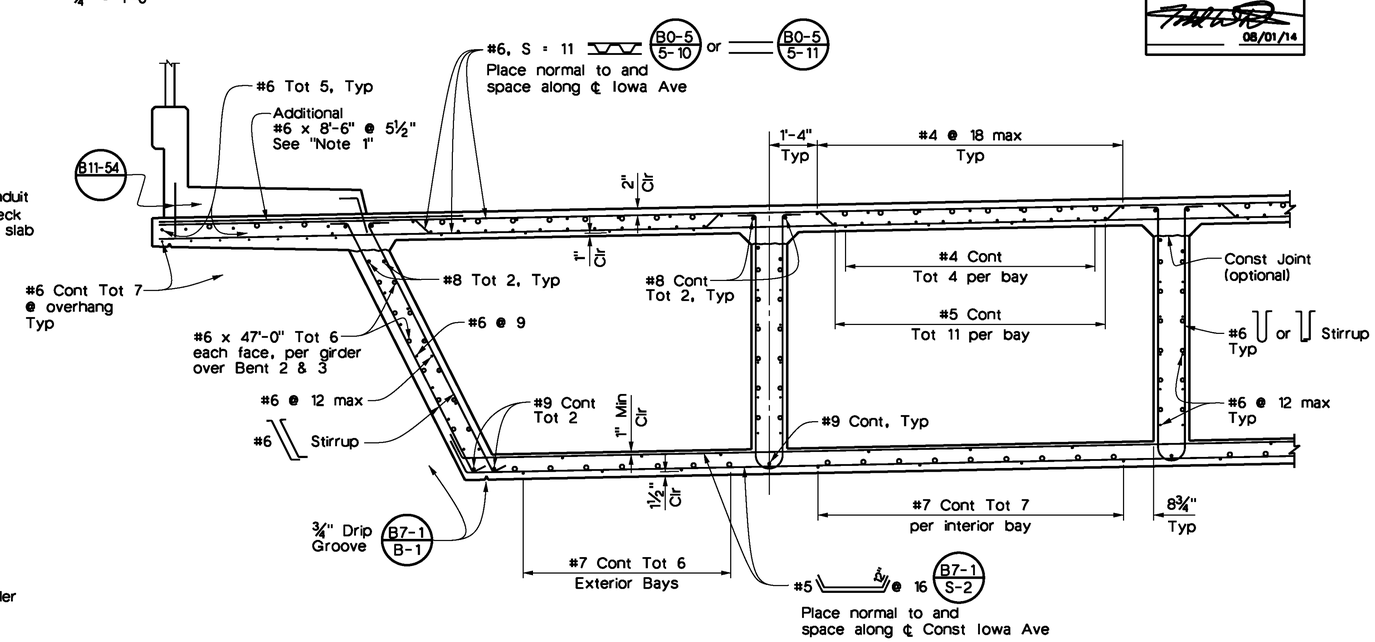

- Indicates Continuous Reinforcement

o Indicates Additional Longitudinal Reinforcement See "Girder Reinforcement" sheet for details.

PART TypICAL SECTION

½" = 1'-0"

B0-5 B7-1 B8-5

Don't Dig...Until You Call U.S.A. Toll Free 1-800-227-2600 for the location of buried utility lines. Don't disrupt vital services. TWO WORKING DAYS BEFORE YOU DIG

PLANS PREPARED BY:
AECOM
901 VIA PIEMONTE
ONTARIO, CA 91764
(909) 579-3050

REGISTERED PROFESSIONAL ENGINEER ROBERT PRICE No. C56855 Exp. 6/30/13 CIVIL STATE OF CALIFORNIA

MARK	REVISIONS	APPR	DATE
AS-BUILT	REVISED AS NOTED	TD	8/01/14

DESIGN BY R.A.P. DRAWN BY R.A./M.A. CHECKED BY M.C./A.S.

IOWA AVENUE
GRADE SEPARATION

TYPICAL SECTION

DWG NO. R-4237
S-16
SHEET 92 OF 133
SCALE: AS SHOWN

AS-BUILT

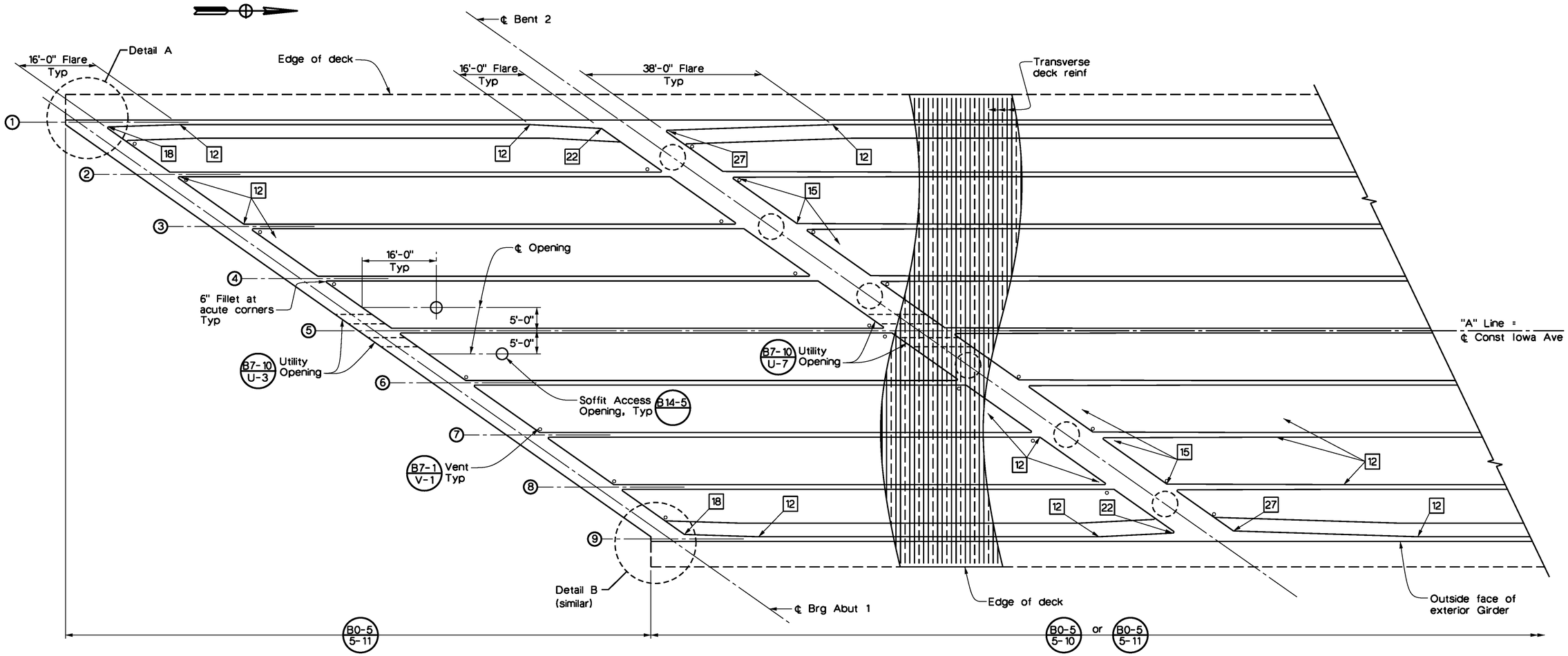

PART GIRDER LAYOUT B0-5 B7-1 B8-5

3/32" = 1'-0"

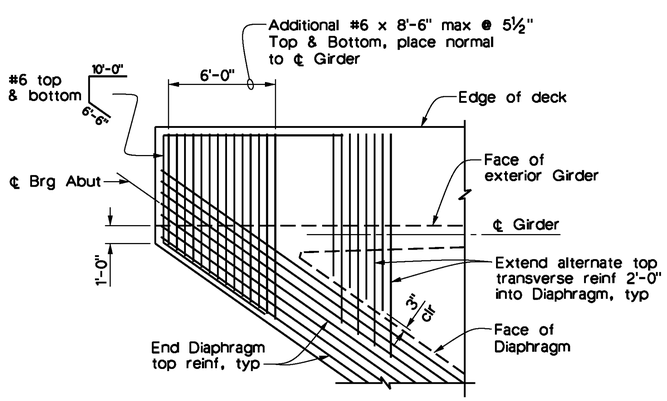

DETAIL A

¼" = 1'-0"

(Abut 1 Left shown
Abut 4 Right similar)

REGISTERED PROFESSIONAL ENGINEER TODD W. DODLEY No. C-39514 Exp. 12/31/2015 CIVIL STATE OF CALIFORNIA

AS-BUILT
08/01/14

Notes:

1. For "Detail B", see "Girder Layout No. 2" sheet.
2. For additional deck reinforcement, see "End Diaphragm Details" and "Girder Reinforcement" sheets.
3. Soffit lights not shown, for locations and details, see "Street Light Plans".

LEGEND

18	Indicates Girder Stem width in inches
2	Girder designation

Don't Dig...Until You Call U.S.A. Toll Free 1-800-227-2600 for the location of buried utility lines. Don't disrupt vital services. TWO WORKING DAYS BEFORE YOU DIG

PLANS PREPARED BY:
AECOM
901 VIA PIEMONTE
ONTARIO, CA 91764
(909) 579-3050

REGISTERED PROFESSIONAL ENGINEER ROBERT PRICE No. C36855 Exp. 6/30/13 CIVIL STATE OF CALIFORNIA

MARK	REVISIONS	APPR	DATE
AS-BUILT	REVISED AS NOTED	TD	8/01/14

DESIGN BY R.A.P. DRAWN BY R.A./M.A. CHECKED BY M.C./A.S.

IOWA AVENUE
GRADE SEPARATION

GIRDER LAYOUT No. 1

DWG NO. R-4237
S-17
SHEET 93 OF 133

SCALE: AS SHOWN

AS-BUILT

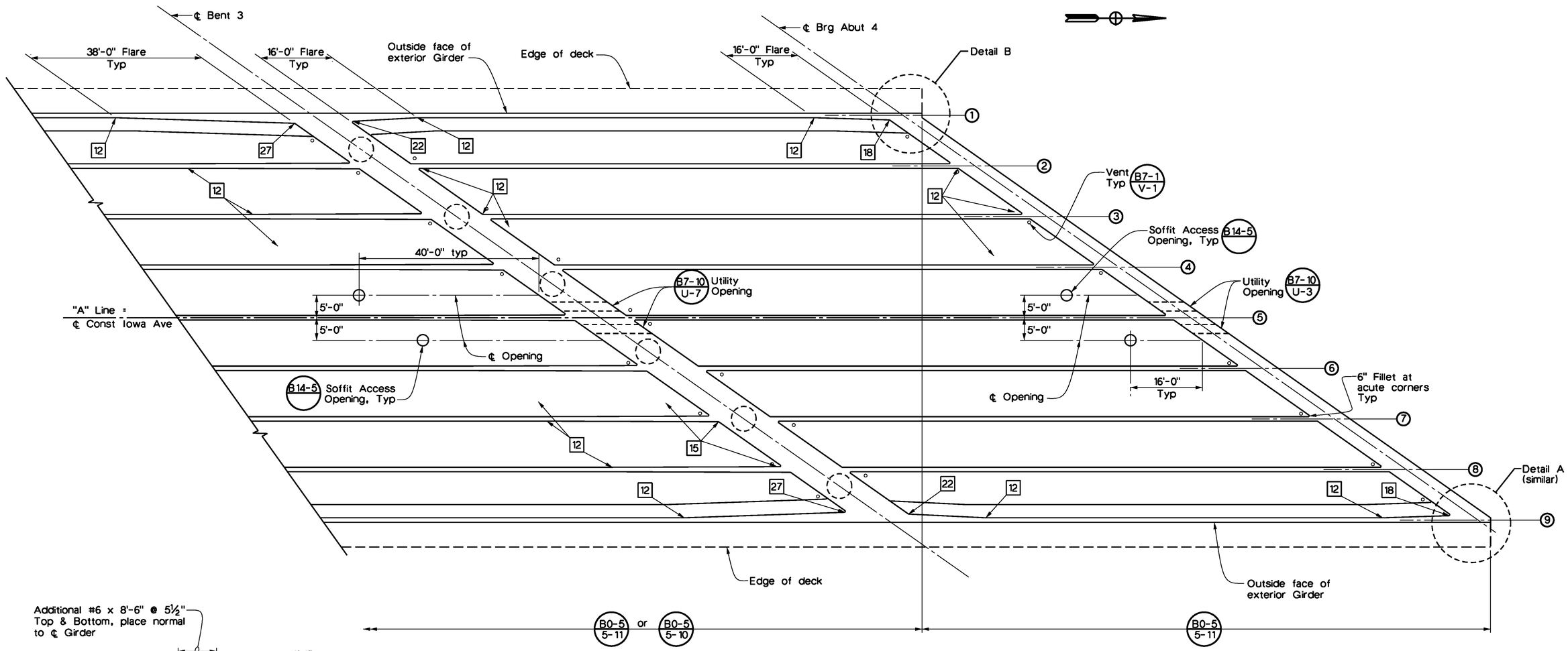

PART GIRDER LAYOUT B0-5 B7-1 B8-5

3/32" = 1'-0"

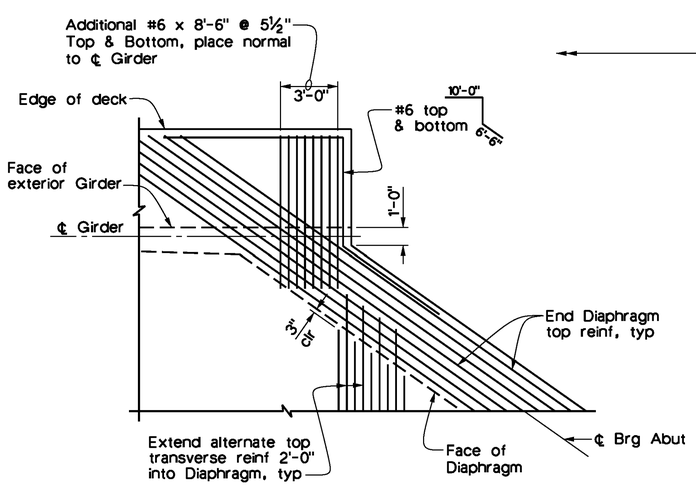

DETAIL B

¼" = 1'-0"

(Abut 4 Left shown
Abut 1 Right similar)

RECORDED PROFESSIONAL ENGINEER TODD W. DOOLEY No. C-39514 Exp. 12/31/2015 CIVIL STATE OF CALIFORNIA

AS-BUILT
08/01/14

Notes:

1. For "Detail A", see "Girder Layout No. 1" sheet.
2. For additional deck reinforcement, see "End Diaphragm Details" and "Girder Reinforcement" sheets.
3. Soffit lights not shown for locations and details, see "Street Light Plans".

LEGEND

18	Indicates Girder Stem width in inches
②	Girder designation

Don't Dig...Until You Call U.S.A. Toll Free
1-800-227-2600
for the location of buried utility lines.
Don't disrupt vital services.
TWO WORKING DAYS BEFORE YOU DIG

PLANS PREPARED BY:
AECOM
901 VIA PIEMONTE
ONTARIO, CA 91764
(909) 579-3050

REGISTERED PROFESSIONAL ENGINEER ROBERT PRICE No. C56855 Exp. 6/30/13 CIVIL STATE OF CALIFORNIA

MARK	REVISIONS	APPR	DATE
AS-BUILT	REVISED AS NOTED	TD	8/01/14

DESIGN BY R.A.P. DRAWN BY R.A./M.A. CHECKED BY M.C./A.S.

IOWA AVENUE
GRADE SEPARATION

GIRDER LAYOUT No. 2

DWG NO. R-4237
S-18
SHEET 94 OF 133

SCALE: AS SHOWN

AS-BUILT

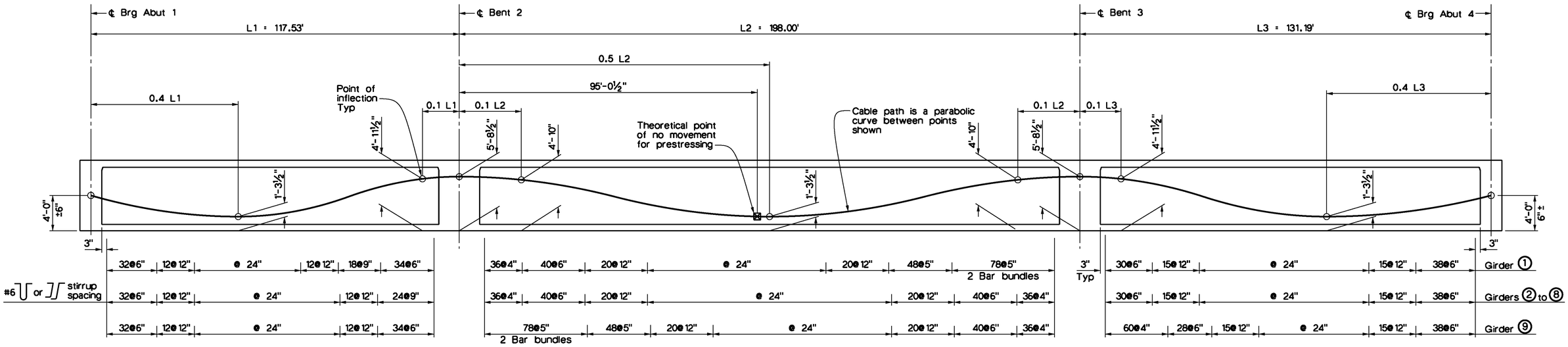

LONGITUDINAL SECTION

No Scale

LEGEND

② Girder designation

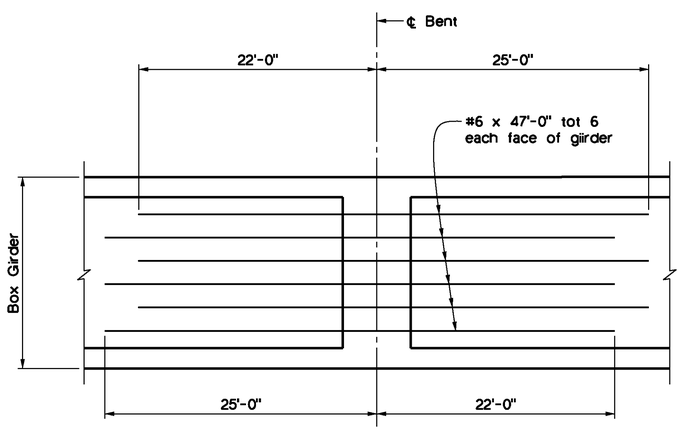

ADDITIONAL GIRDER STEM REINFORCEMENT

No Scale

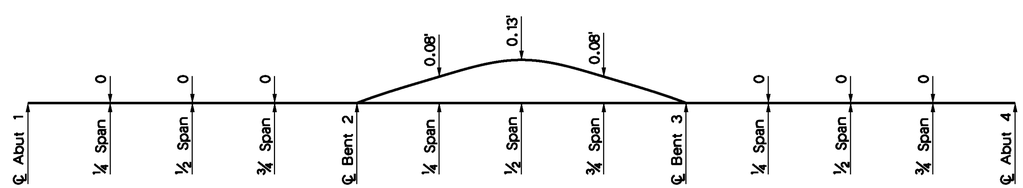

CAMBER DIAGRAM

No Scale

PRESTRESSING NOTES

270 ksi low relaxation strand:

Pjack	= 25,780 kips
Anchor set	= ⅜ inch
Total number of girders	= 9

Distribution of prestress force (Pjack) between girders shall not exceed the ratio of 3:2. Maximum final force variation between girders shall not exceed 725 kips.

Concrete: f'c = 5,000 psi @ 28 days

f'ci = 4,000 psi @ time of stressing

Contractor shall submit elongation calculations based on initial stresses at ⊠ = 0.888 times jacking stress.

Stressing shall be performed from both Abutments.

REGISTERED PROFESSIONAL ENGINEER TODD W. DUDLEY No. C-39514 Exp. 12/31/2015 CIVIL STATE OF CALIFORNIA

AS-BUILT
08/01/14

Don't Dig...Until You Call U.S.A. Toll Free 1-800-227-2600 for the location of buried utility lines. Don't disrupt vital services.
TWO WORKING DAYS BEFORE YOU DIG

PLANS PREPARED BY:
AECOM
901 VIA PIEMONTE
ONTARIO, CA 91764
(909) 579-3050

REGISTERED PROFESSIONAL ENGINEER ROBERT PRICE No. C56855 Exp. 6/30/13 CIVIL STATE OF CALIFORNIA

MARK	REVISIONS	APPR	DATE
AS-BUILT	REVISED AS NOTED	TD	8/01/14

DESIGN BY R.A.P. DRAWN BY R.A./M.A. CHECKED BY H.C./A.S.

IOWA AVENUE
GRADE SEPARATION

GIRDER DETAILS

DWG NO. R-4237
S-19
SHEET 95 OF 133

SCALE: AS SHOWN

AS-BUILT

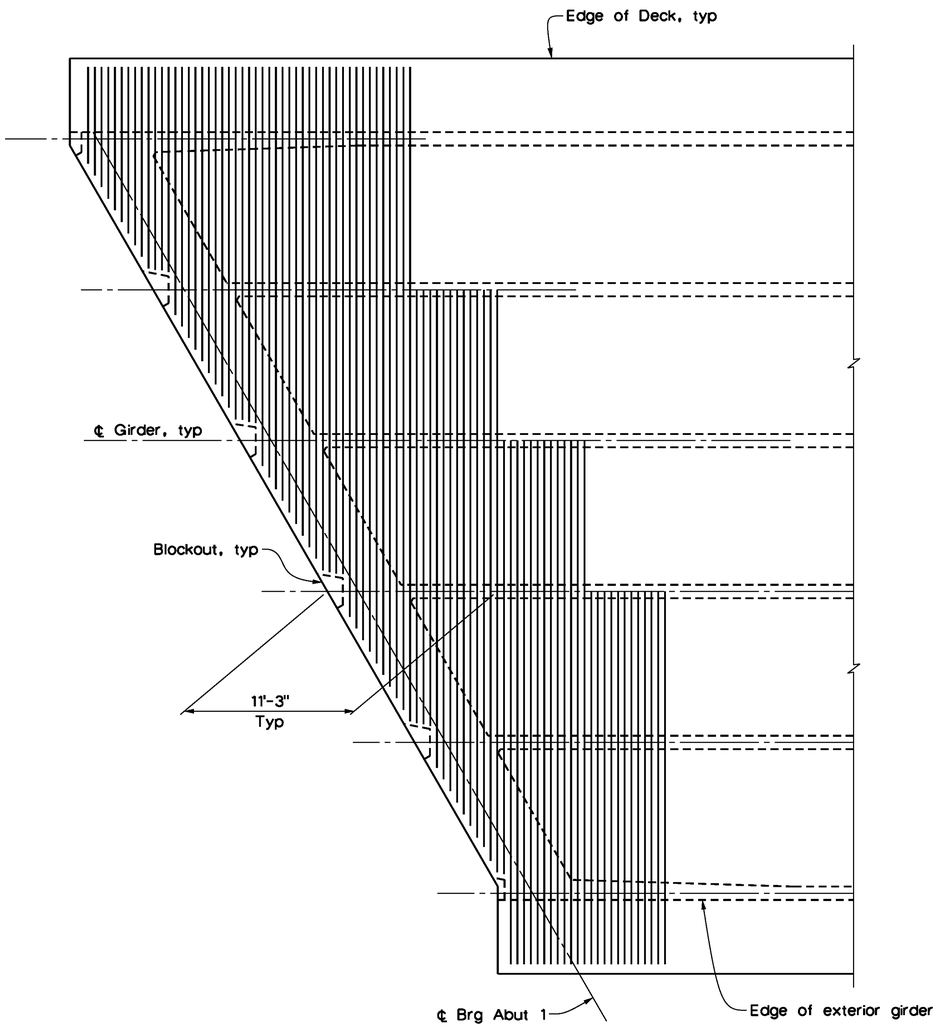

DECK SLAB & BOTTOM SLAB GENERAL ZONE ANCHORAGE REINFORCEMENT DETAIL

No Scale

See "Notes 1 & 2"

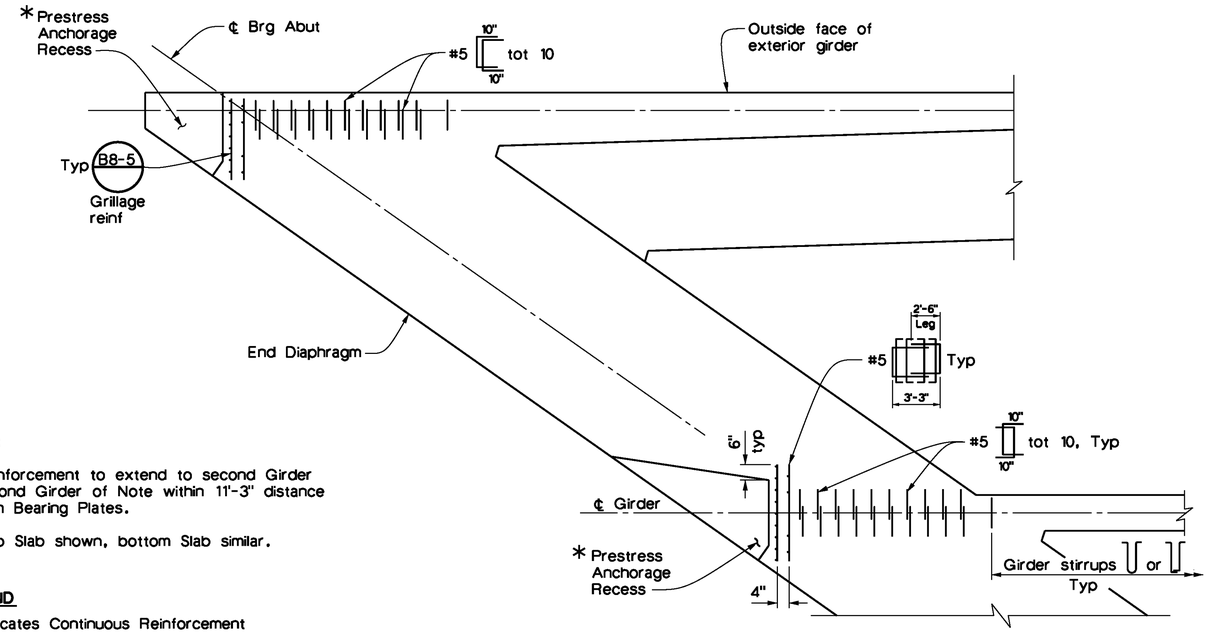

Notes:

1. Reinforcement to extend to second Girder beyond Girder of Note within 11'-3" distance from Bearing Plates.
2. Top Slab shown, bottom Slab similar.

LEGEND

- ● Indicates Continuous Reinforcement
- ○ Indicates Additional Reinforcement

END DIAPHRAGM PART PLAN

½" = 1'-0"

Reinforcement shown is additional to reinforcement shown on B8-5

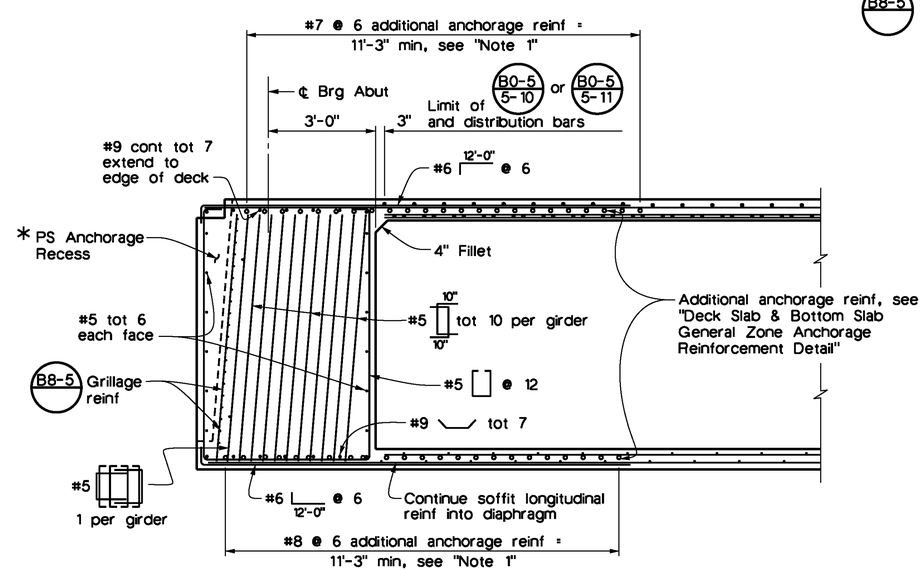

END DIAPHRAGM

½" = 1'-0"

* To be determined by the Post-Tension Contractor and verified by the Engineer prior to construction.

REGISTERED PROFESSIONAL ENGINEER TODD W. DUDLEY No. C-39514 Exp. 12/31/2015 CIVIL STATE OF CALIFORNIA

AS-BUILT 08/01/14

Don't Dig...Until You Call U.S.A. Toll Free 1-800-227-2600 for the location of buried utility lines. Don't disrupt vital services. TWO WORKING DAYS BEFORE YOU DIG

PLANS PREPARED BY:
AECOM
901 VIA PIEMONTE
ONTARIO, CA 91764
(909) 579-3050

REGISTERED PROFESSIONAL ENGINEER ROBERT PRICE No. C56855 Exp. 6/30/13 CIVIL STATE OF CALIFORNIA

MARK	REVISIONS	APPR	DATE
AS-BUILT	REVISED AS NOTED	TD	8/01/14

DESIGN BY R.A.P. DRAWN BY R.A./M.A. CHECKED BY M.C./A.S.

IOWA AVENUE GRADE SEPARATION

END DIAPHRAGM DETAILS

DWG NO. R-4237
S-20
SHEET 96 OF 133
SCALE: AS SHOWN

USER:HARTNDJ DGN:S-20

AS-BUILT

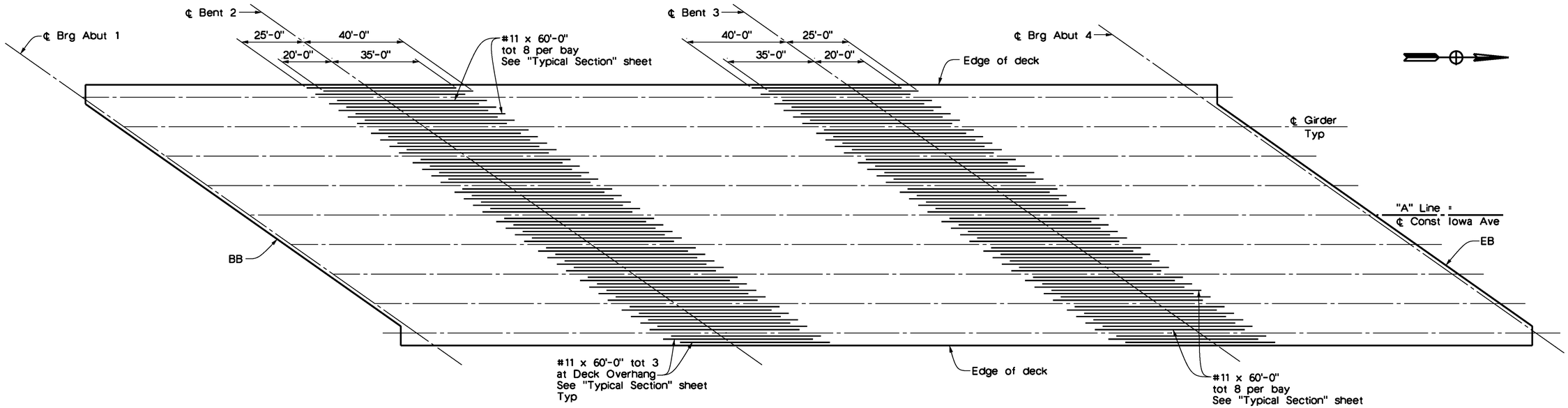

ADDITIONAL TOP LONGITUDINAL REINFORCEMENT

No Scale

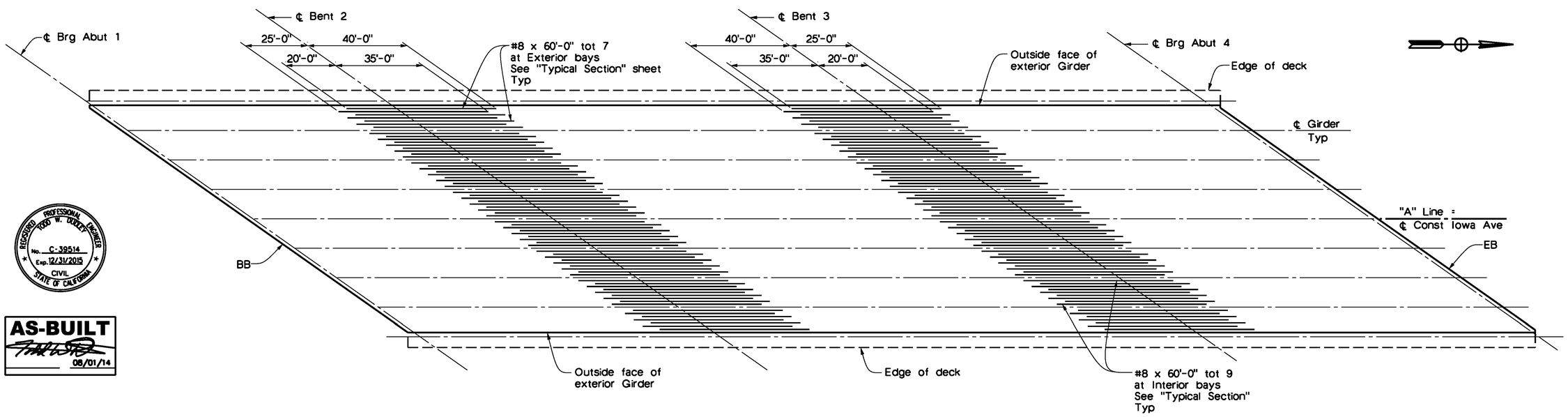

REGISTERED PROFESSIONAL ENGINEER TODD W. DUDLEY No. C-39514 Exp. 12/31/2015 CIVIL STATE OF CALIFORNIA

AS-BUILT
08/01/14

ADDITIONAL BOTTOM LONGITUDINAL REINFORCEMENT

No Scale

Note:

1. All longitudinal reinforcement shown shall be "service" spliced. Splice bars at alternate ends. Splices not permitted within 20'-0" from ℄ Bent and ℄ Span.

Don't Dig...Until You Call U.S.A. Toll Free
1-800-227-2600
for the location of buried utility lines.
Don't disrupt vital services.
TWO WORKING DAYS BEFORE YOU DIG

PLANS PREPARED BY:
AECOM
901 VIA PIEMONTE
ONTARIO, CA 91764
(909) 579-3050

REGISTERED PROFESSIONAL ENGINEER ROBERT PRICE No. C56855 Exp. 6/30/13 CIVIL STATE OF CALIFORNIA

MARK	REVISIONS	APPR	DATE
AS-BUILT	REVISED AS NOTED	TD	8/01/14

DESIGN BY R.A.P. DRAWN BY R.A./M.A. CHECKED BY M.C./A.S.

IOWA AVENUE
GRADE SEPARATION

GIRDER REINFORCEMENT

DWG NO. R-4237
S-21
SHEET 97 OF 133
SCALE: AS SHOWN

AS-BUILT

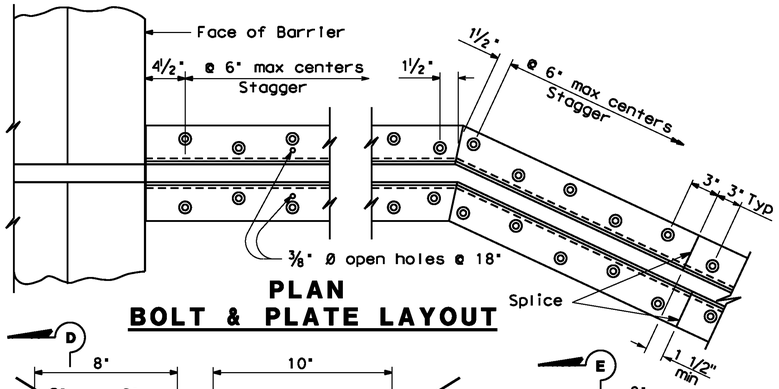

PLAN
BOLT & PLATE LAYOUT

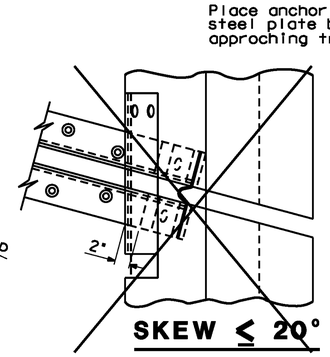

SKEW ≤ 20°

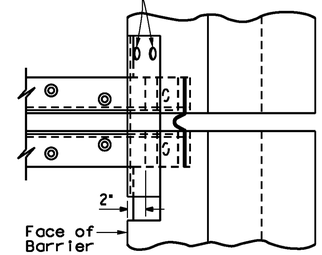

SKEW > 20°

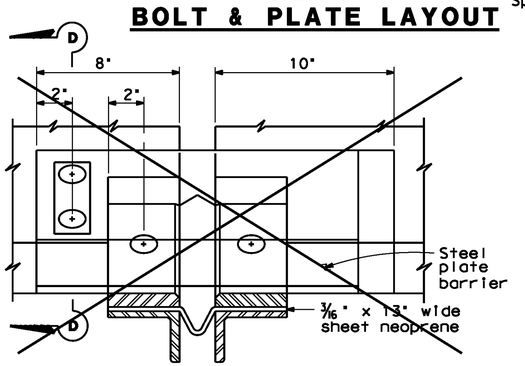

VIEW B-B

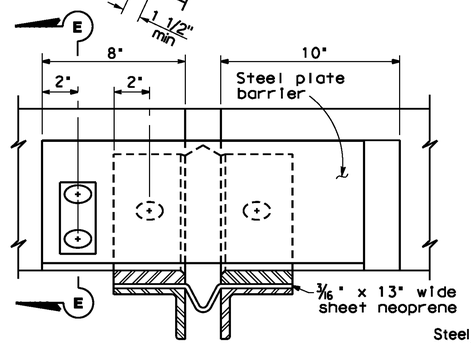

VIEW C-C

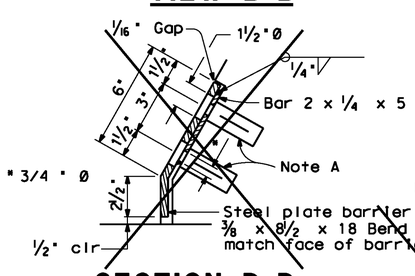

SECTION D-D

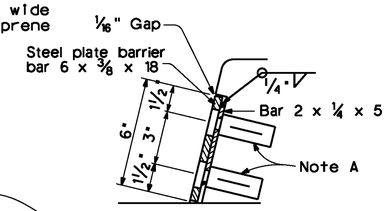

SECTION E-E

SECTION A-A

Note :
Stagger anchor studs @ 4½"± on centers thus:

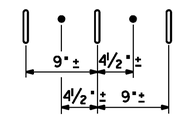

Joint Information			"a" Dimensions		
Location	Movement Rating (MR)	Skew	Winter	Spring & Fall	Summer
Abut 1&4	3"	54.835°	1 5/8"	7/8"	3/4"

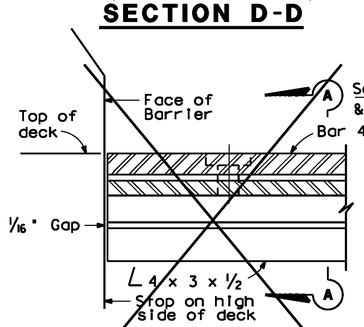

HIGH SIDE BARRIER DETAIL

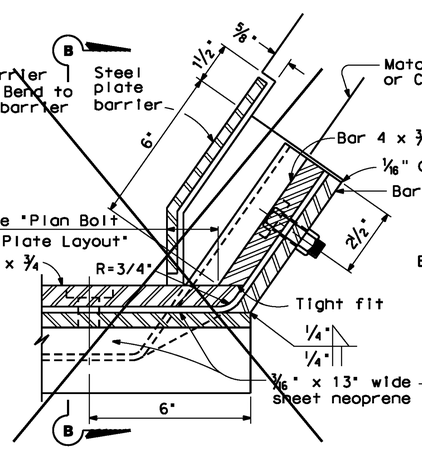

LOW SIDE BARRIER DETAIL
(See Note B)

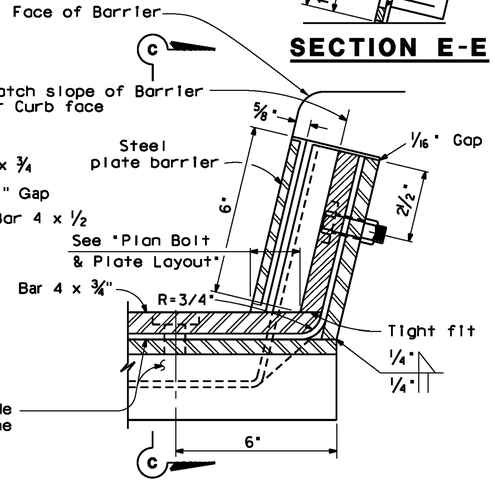

SIDEWALK DETAIL
(See Note B)

NOTES:

Full penetration butt welds may be substituted for fillet welds on all anchor studs.

Alternate types of anchor studs may be permitted subject to the approval by the Engineer.

Use joint at crown of roadway, at any change in traverse slope in deck and at changes in horizontal direction. Place other joints at or near lanes. All metal parts to be painted after fabrication.

Sheet neoprene shall be fabricated in one continuous piece or joints shall be vulcanized. Neoprene shall be fabricated to bend around corners. 1" holes in neoprene sheets shall be drilled or punched so that the neoprene is not distorted at the time of installation.

NOTE A

Insert assembly or expansion anchorage for ⅝" x 1¾" A325 bolt.

NOTE B

Use the sidewalk Detail at all sidewalk joints. Use the low side Barrier Detail at both sides if the roadway is crowned or if the difference in elevation between the ends of the seal is 0.5' or less.

NO SCALE

NOTE:
The details of this sheet are copied from Caltrans Standard Drawing XS8-010e, dated 5/8/08 and modified

Don't Dig...Until You Call U.S.A. Toll Free 1-800-227-2600 for the location of buried utility lines. Don't disrupt vital services.
TWO WORKING DAYS BEFORE YOU DIG

PLANS PREPARED BY:
AECOM
901 VIA PIEMONTE
ONTARIO, CA 91764
(909) 579-3050

REGISTERED PROFESSIONAL ENGINEER ROBERT PRICE No. C56855 Exp. 6/30/13 CIVIL STATE OF CALIFORNIA

MARK	REVISIONS	APPR	DATE
AS-BUILT	REVISED AS NOTED	TD	8/01/14

DESIGN BY R.A.P. DRAWN BY R.A./M.A. CHECKED BY M.C./A.S.

IOWA AVENUE
GRADE SEPARATION
JOINT SEAL ASSEMBLY (MAX MOVEMENT RATING=4")

DWG NO. R-4237
S-22
SHEET 98 OF 133
SCALE: AS SHOWN

REGISTERED PROFESSIONAL ENGINEER TODD W. DUDLEY No. C-39514 Exp. 12/31/2015 CIVIL STATE OF CALIFORNIA

AS-BUILT 08/01/14

AS-BUILT

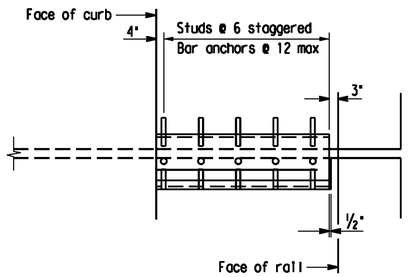

PART PLAN EXPANSION ARMOR NORMAL TO GIRDER

1/2" = 1'-0"

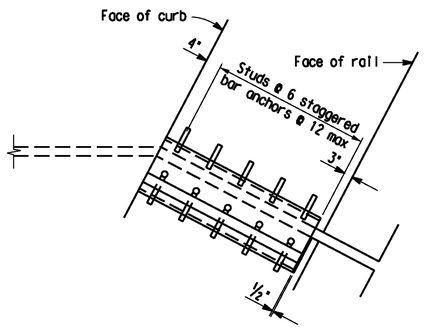

PART PLAN EXPANSION ARMOR SKEWED TO GIRDER

1/2" = 1'-0"

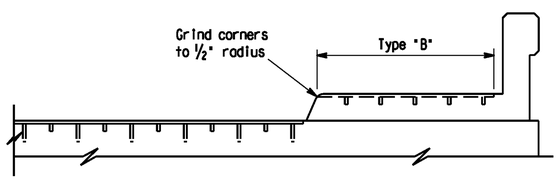

TYPICAL SECTION

1/2" = 1'-0"

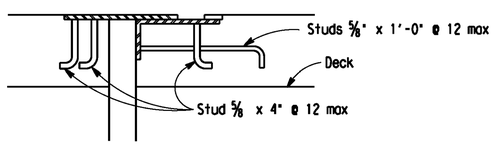

TYPE B

DETAIL WITH ANCHOR STUDS

1 1/2" = 1'-0"

For details not shown, see "Detail with Bar Anchors".

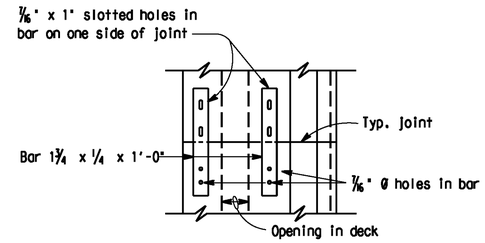

PLAN

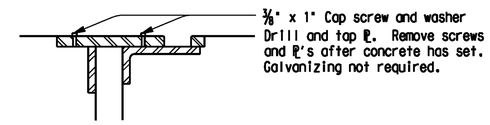

SECTION

TYPICAL JOINT DETAILS

1 1/2" = 1'-0"

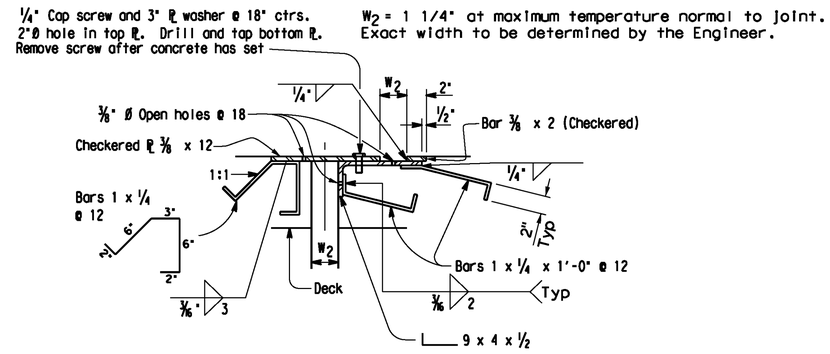

TYPE B

DETAIL WITH BAR ANCHORS

1 1/2" = 1'-0"

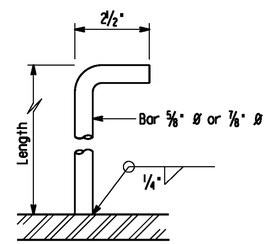

ANCHOR STUD

5" = 1'-0"

Note: Alternate types of anchor studs may be permitted subject to the approval of the Engineer.

REGISTERED PROFESSIONAL ENGINEER
ROOD W. DUDLEY
No. C-39514
Exp. 12/31/2015
CIVIL
STATE OF CALIFORNIA

AS-BUILT
08/01/14

NOTES:

Full penetration butt welds may be substituted for the fillet welds on all anchor studs.

Expansion armor assembly to be galvanized after fabrication except as noted.

Expansion armor assembly to be fabricated in 14' max. lengths.

Use joint at crown of roadway, at any change in transverse slope of deck and at edge of lane.

Quantities shown are for design purpose only.

UNIT TYPE	ASSEMBLY WT LBS/LF	
	Bar Anchor	Stud Anchor
B	45	45

NOTE: The details on this sheet are copied from Caltrans Standard XS8-040e, dated 5/8/08 and modified.

NO SCALE

Don't Dig...Until You Call U.S.A. Toll Free
1-800-227-2600
for the location of buried utility lines.
Don't disrupt vital services.
TWO WORKING DAYS BEFORE YOU DIG

PLANS PREPARED BY:
AECOM
901 VIA PIEMONTE
ONTARIO, CA 91764
(909) 579-3050

REGISTERED PROFESSIONAL ENGINEER
ROBERT PRICE
No. C56855
Exp. 6/30/13
CIVIL
STATE OF CALIFORNIA

MARK	REVISIONS	APPR	DATE
AS-BUILT	REVISED AS NOTED	TD	8/01/14

DESIGN BY R.A.P. DRAWN BY R.A./M.A. CHECKED BY M.C./A.S.

IOWA AVENUE
GRADE SEPARATION

JOINT ARMOR DETAILS (MAX MOVEMENT RATING=4")

DWG NO. R-4237
S-23
SHEET 99 OF 133
SCALE: AS SHOWN

AS-BUILT

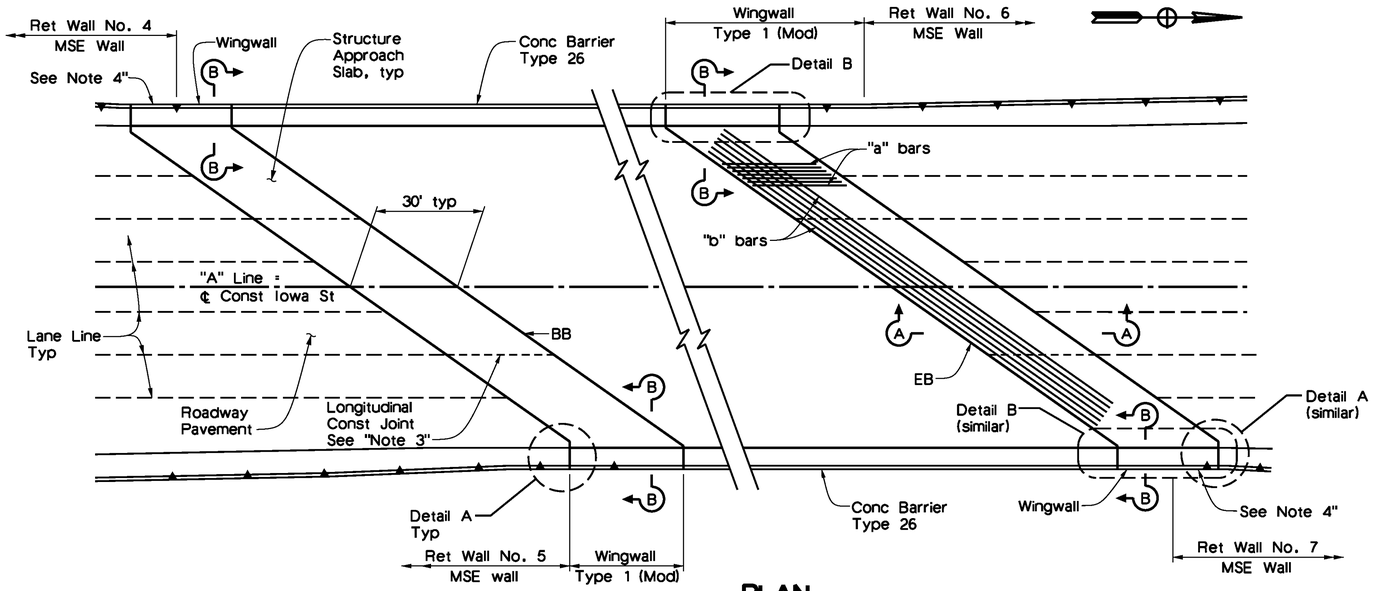

PLAN
No Scale

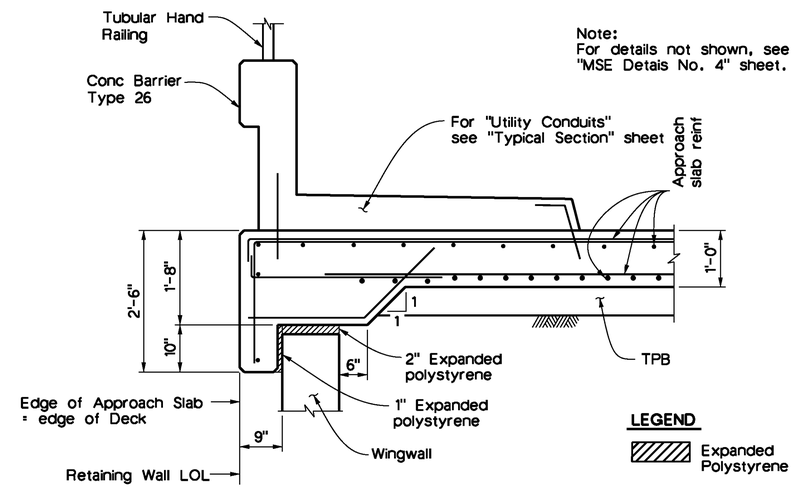

Note:
For details not shown, see "MSE Detais No. 4" sheet.

SECTION B-B
No Scale

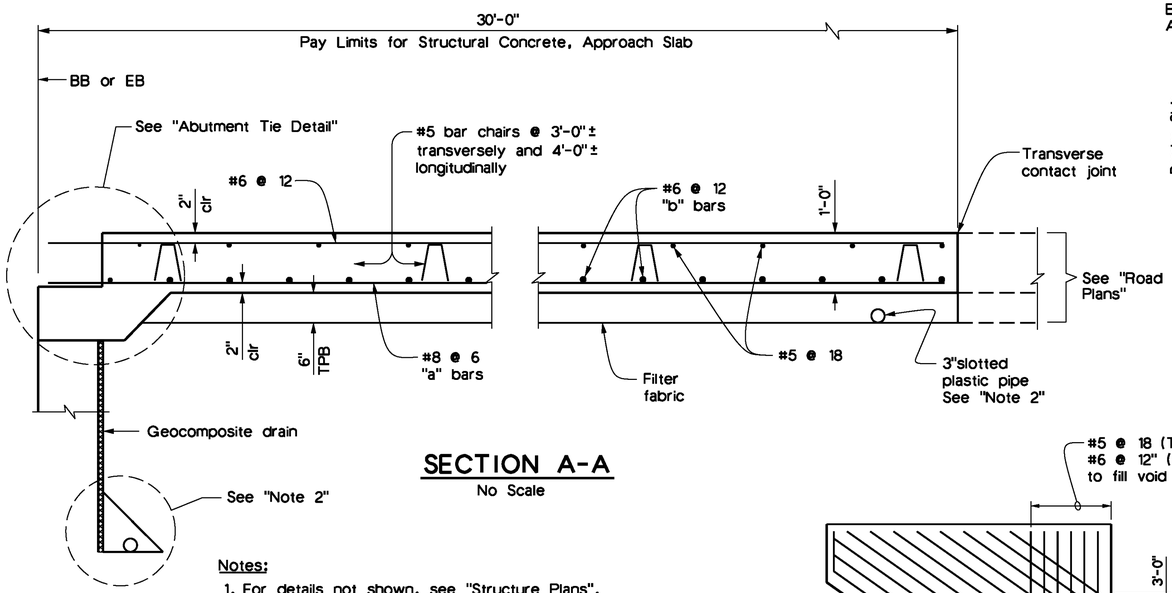

SECTION A-A
No Scale

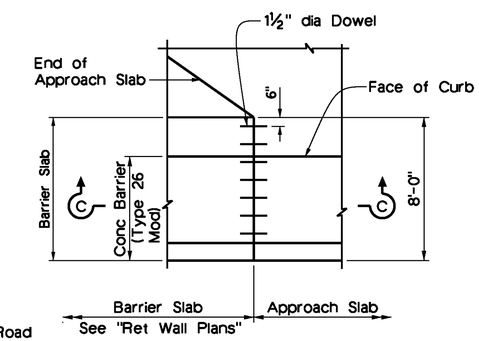

DETAIL A
No Scale

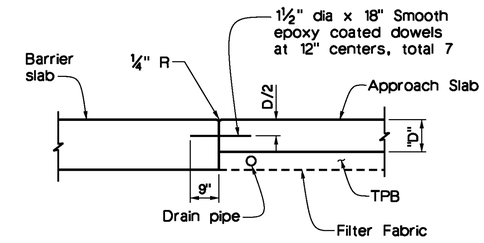

SECTION C-C
No Scale

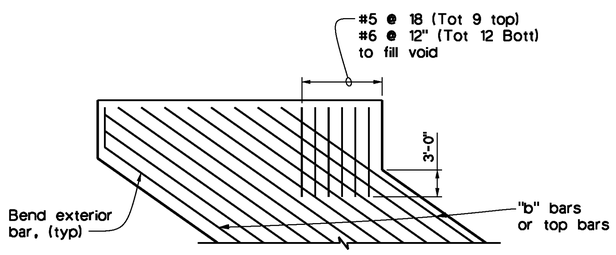

DETAIL B
No Scale

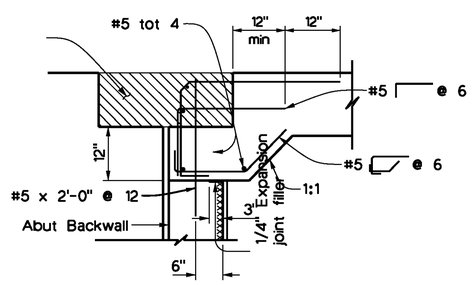

ABUTMENT TIE DETAIL
No Scale

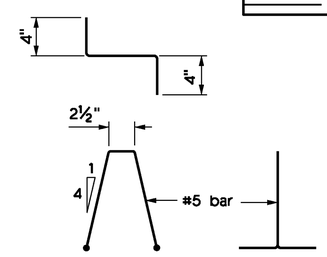

BAR CHAIR DETAIL
No Scale

Notes:

1. For details not shown, see "Structure Plans". For MR ≤ 2", adjust bar reinforcement to clear a sawcut for sealed joint, when required.
2. For drainage details, see "Structure Approach Drainage Details" sheet.
3. Longitudinal construction joints, when permitted by the Engineer, shall be located on lane lines.
4. For Approach slab details over MSE Wall panels, see Retaining Wall plans, "MSE Details No. 4" sheet.

NOTE:
The details of this sheet are copied from Caltrans Standard Drawing XS3-120e, dated 3/14/05 and modified.

REGISTERED PROFESSIONAL ENGINEER TODD W. COOLEY No. C-39514 Exp. 12/31/2015 CIVIL STATE OF CALIFORNIA

AS-BUILT 08/01/14

Don't Dig...Until You Call U.S.A. Toll Free 1-800-227-2600 for the location of buried utility lines. Don't disrupt vital services.
TWO WORKING DAYS BEFORE YOU DIG

PLANS PREPARED BY:
AECOM
901 VIA PIEMONTE
ONTARIO, CA 91764
(909) 579-3050

REGISTERED PROFESSIONAL ENGINEER ROBERT PRICE No. C56855 Exp. 6/30/13 CIVIL STATE OF CALIFORNIA

MARK	REVISIONS	APPR	DATE
AS-BUILT	REVISED AS NOTED	TD	8/01/14

DESIGN BY R.A.P. DRAWN BY R.A./M.A. CHECKED BY M.C./A.S.

IOWA AVENUE
GRADE SEPARATION
STRUCTURE APPROACH TYPE N(30S)

DWG NO. R-4237
S-24
SHEET 100 OF 133
SCALE: AS SHOWN

AS-BUILT

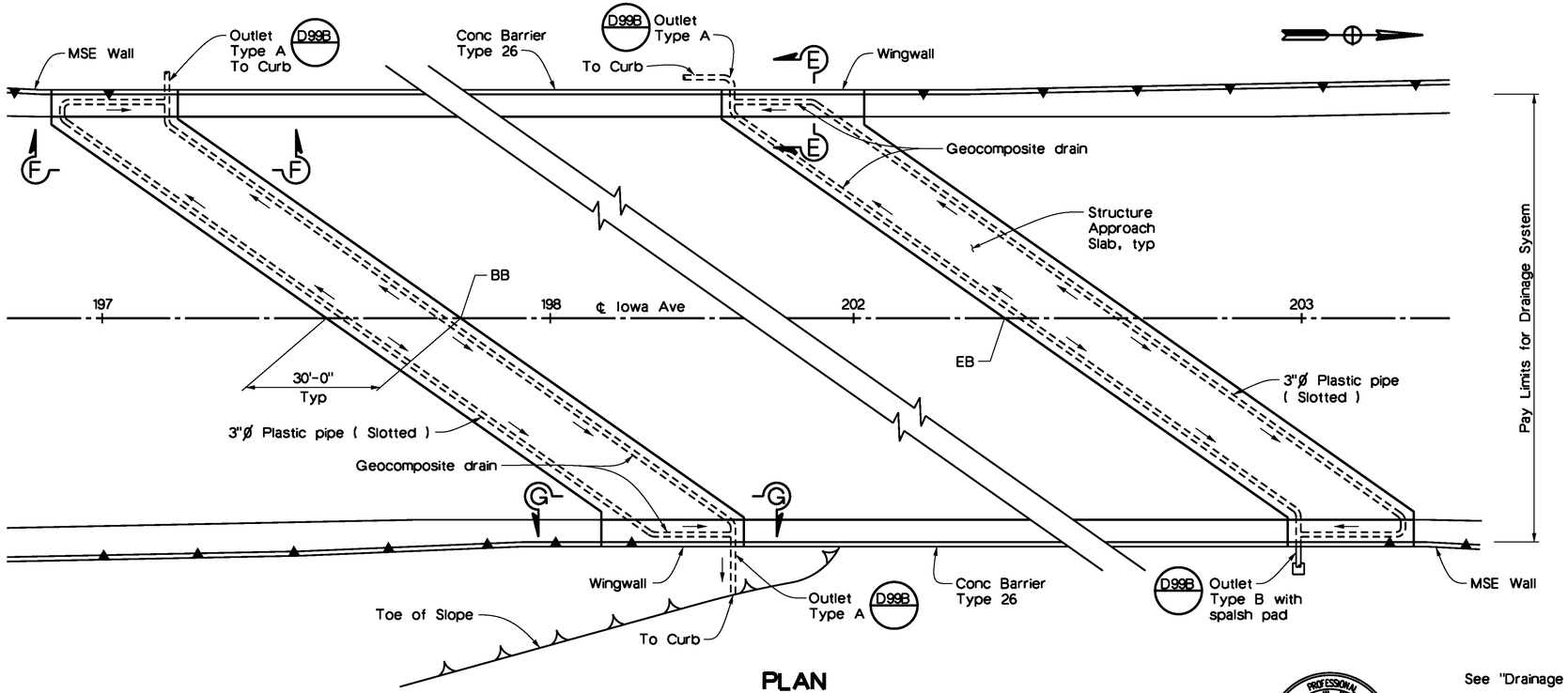

PLAN
1" = 15'

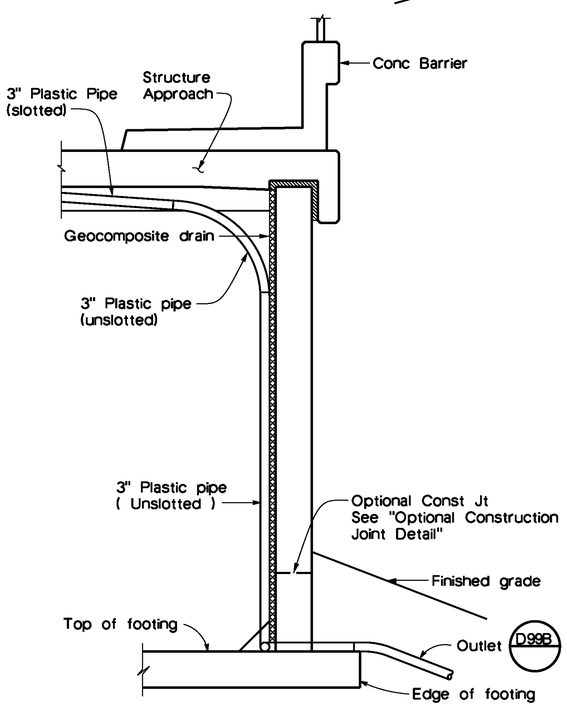

SECTION E-E
½" = 1'-0"

Note: Bends and junctions in 3" plastic pipe are 30" radius min.

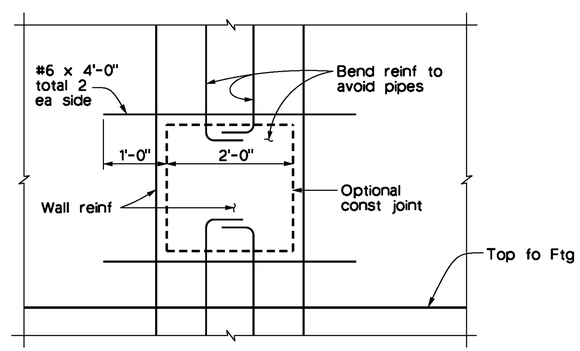

OPTIONAL JOINT DETAIL AT DRAINAGE PIPE
No Scale

REGISTERED PROFESSIONAL ENGINEER TODD W. DUDLEY No. C-39514 Exp. 12/31/2015 CIVIL STATE OF CALIFORNIA

AS-BUILT
08/01/14

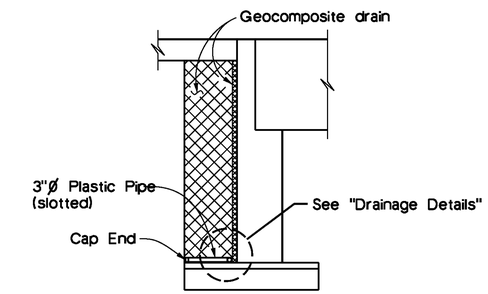

CANTILEVER WINGWALL
SECTION F-F
¼" = 1'-0"

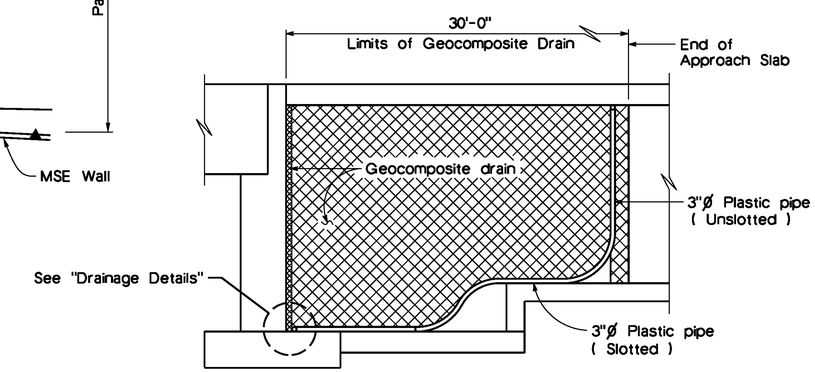

RETAINING WALL WINGWALL
SECTION G-G
¼" = 1'-0"

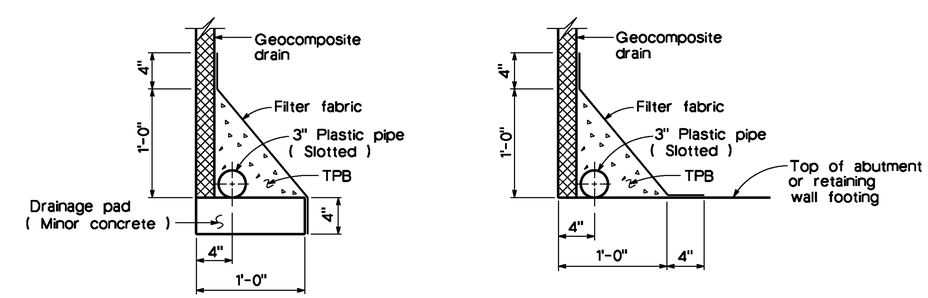

WITHOUT FOOTING **WITH FOOTING**

DRAINAGE DETAILS
1½" = 1'-0"

Don't Dig...Until You Call U.S.A. Toll Free 1-800-227-2600 for the location of buried utility lines. Don't disrupt vital services. TWO WORKING DAYS BEFORE YOU DIG

PLANS PREPARED BY:
AECOM
901 VIA PIEMONTE
ONTARIO, CA 91764
(909) 579-3050

REGISTERED PROFESSIONAL ENGINEER ROBERT PRICE No. C36855 Exp. 6/30/13 CIVIL STATE OF CALIFORNIA

MARK	REVISIONS	APPR	DATE
AS-BUILT	REVISED AS NOTED	TD	8/01/14

DESIGN BY R.A.P. DRAWN BY R.A./M.A. CHECKED BY M.C./A.S.

IOWA AVENUE
GRADE SEPARATION

STRUCTURE APPROACH DRAINAGE DETAILS

DWG NO. R-4237
S-25
SHEET 101 OF 133
SCALE: AS SHOWN

AS-BUILT

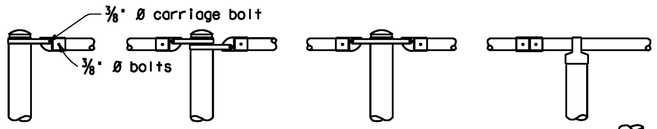

ALTERNATIVE DETAILS

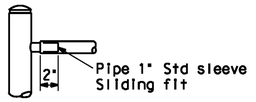

TYPICAL DETAILS

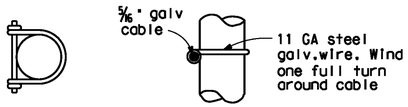

PLAN ELEVATION

DETAIL H

No Scale

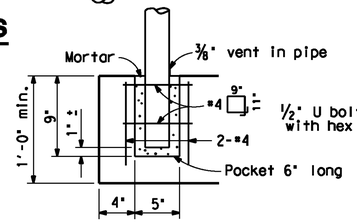

ALTERNATIVE ANCHORAGE DETAIL

May be used when thickness of concrete is 1'-0" or more

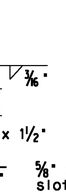

SIDE VIEW

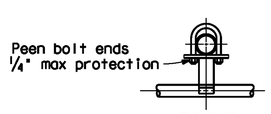

PLAN

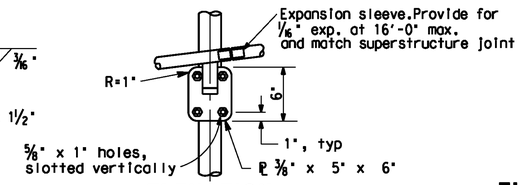

ELEVATION

PIPE HANDRAILING BRACKET

No Scale

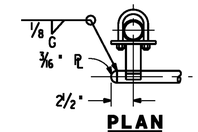

PLAN

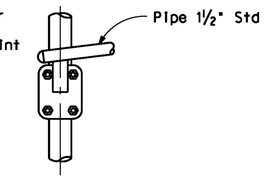

ELEVATION

PIPE HANDRAILING AT END

No Scale

NOTES:

1. Railing assembly except chain link fabric to be galvanized after fabrication.
2. Railing shall conform to horizontal and vertical alignment. Posts shall be vertical. Horizontal pipes shall be bent if radius is 150'-0' or less-may be 8'-0" chords if radius is over 150'-0".
3. Peen all 3/8 " Ø bolts.
4. When railing is on slope, fabric shall be placed parallel to slope.
5. Alternative details may be submitted by contractor for engineer approval.
6. Additional pipe 1 1/4" Ø std required on radius less than 150'-0".

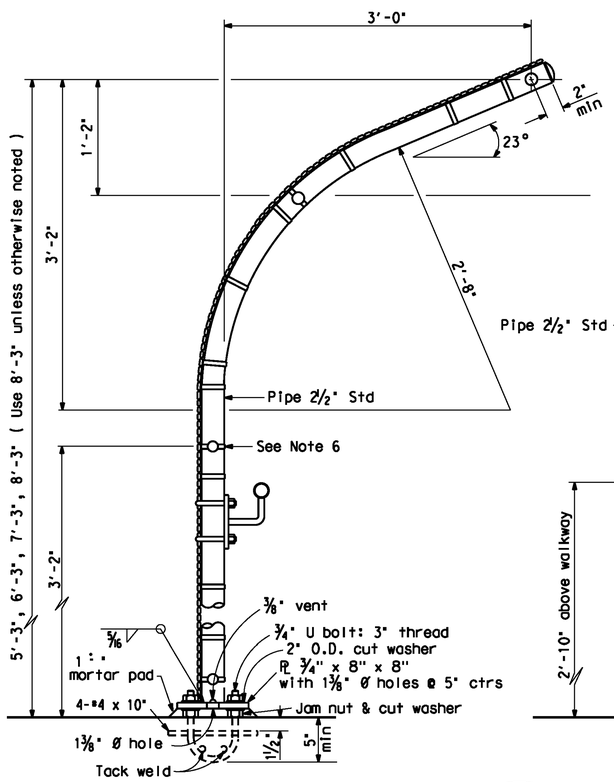

TYPICAL POST DETAIL

No Scale

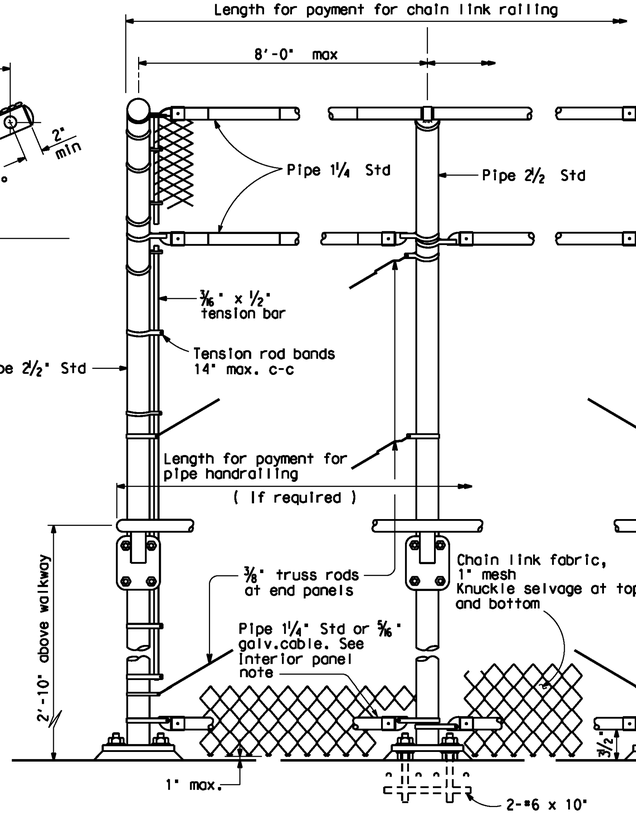

END POST INTERMEDIATE POST

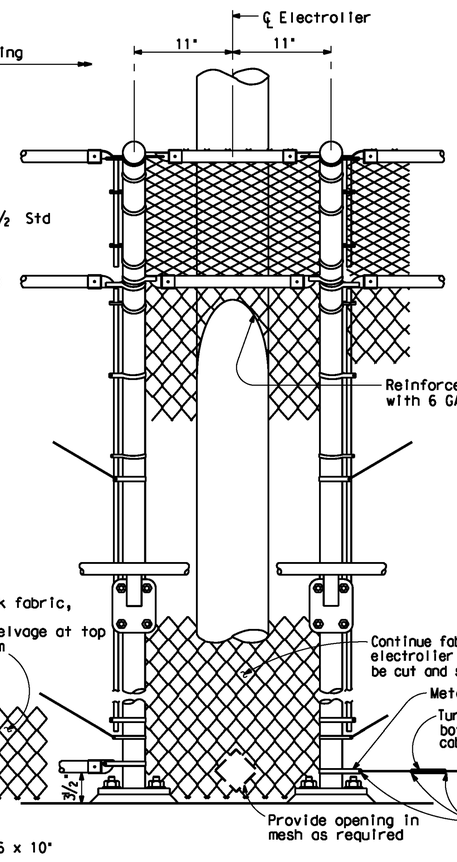

AT ELECTROLIER

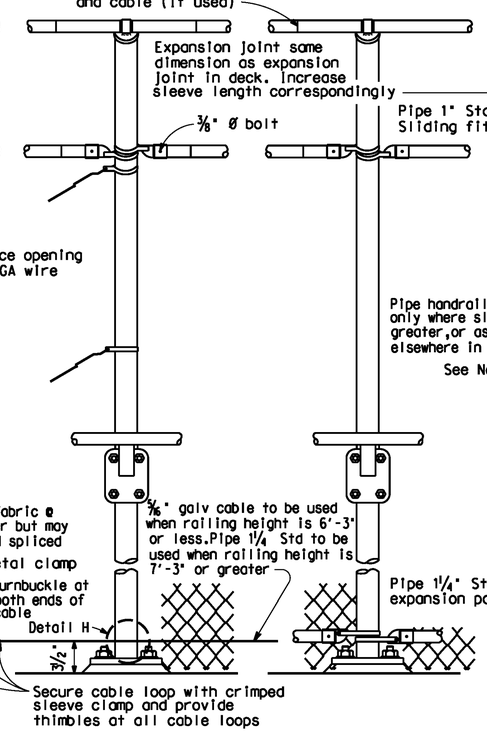

TYPICAL INTERIOR PANEL

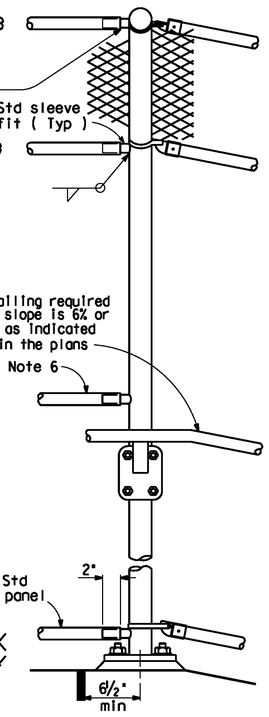

AT EXPANSION JOINT

ELEVATION

No Scale

NOTE: The details on this sheet are copied from Caltrans Standard Drawing XS 16-310e, dated 4/15/08

REGISTERED PROFESSIONAL ENGINEER TODD W. DUDLEY No. C-39514 Exp. 12/31/2015 CIVIL STATE OF CALIFORNIA

AS-BUILT 08/01/14

NO SCALE

Don't Dig...Until You Call U.S.A. Toll Free 1-800-227-2600 for the location of buried utility lines. Don't disrupt vital services. TWO WORKING DAYS BEFORE YOU DIG

PLANS PREPARED BY: AECOM 901 VIA PIEMONTE ONTARIO, CA 91764 (909) 579-3050

REGISTERED PROFESSIONAL ENGINEER ROBERT PRICE No. C56855 Exp. 6/30/13 CIVIL STATE OF CALIFORNIA

MARK	REVISIONS	APPR	DATE
AS-BUILT	REVISED AS NOTED	TD	8/01/14

DESIGN BY R.A.P. DRAWN BY R.A./M.A. CHECKED BY M.C./A.S.

IOWA AVENUE GRADE SEPARATION

CHAIN LINK RAILING TYPE 3

DWG NO. R-4237
S-26
SHEET 102 OF 133
SCALE: AS SHOWN

AS-BUILT

LEGEND OF BORING OPERATIONS

ROTARY SAMPLE BORING (WET): 98-1; Year boring drilled; Boring number; 3"; Description of material; Total Unit weight (lb/cu ft); % moisture; Consolidation test; 130; 30; CN; GWS; Elev.; Date measured; Conformable material change; Estimated material change; Unconformable material change; Boring Date; Top Hole El.; Casing driven; Location; Sample No.; Size of Sampler (in); Unconfined compressive strength (T/sqft); Number of blows to produce 12" of penetration after the initial 6" of seating using a 140 lb hammer with a 30" drop or as specified.; Number of blows required to produce the indicated penetration after an initial 6" seating.; 50 blows produced the indicated penetration during the initial 6" interval; 1.0; 40; 1.4; 1; 80/10"; 2; REF/3"; 3

2¼" CONE PENETRATION BORING: 98-2; Top Hole El; Location; No count recorded; Pushed; Driving rate in seconds per foot (Using a Stanley MB 156 percussion hammer or as noted); GWS; Elev; Date measured; NC, P, 2, 4, 6, 10, 37, 42, 56, 91, 58, 65, 60, 43, 49, 113, 154; 175/0; Boring Date; 100; 200

ELECTRONIC CONE PENETROMETER TEST: 98-3; Top Hole El; Location; Pressure measured along sleeve friction element (150 cm² area) divided by pressure measured on tip element; Pressure measured on tip element (10 cm² area); Friction Ratio (%) 6 4 2; Boring Date; Tip Bearing (TSF) 100 200 300

Cone Penetrometer dimensions and testing procedures are in accordance with ASTM standard D 3441-86 or as noted

IN-SITU, LAB & FIELD TEST DESIGNATIONS

- (AL) ATTERBERG LIMITS
- (CA) CHEMICAL ANALYSIS
- (CN) CONSOLIDATION
- (CU) CONSOLIDATED UNDRAINED TRIAXIAL
- (DS) DIRECT SHEAR
- (MD) MAX. DRY DENSITY
- (HM) HYDROMETER
- (SA) SIEVE ANALYSIS
- (SE) SAND EQUIVALENT
- (UC) UNCONFINED COMPRESSION
- (UU) UNCONSOLIDATED UNDRAINED TRIAXIAL
- (W) WASH #200

TYPE OF BORINGS

- 2¼" CONE PENETRATION
- ROTARY WASH
- ELECTRONIC CONE PENETROMETER
- AUGER BORING (DRY)
- TEST PIT
- DIAMOND CORE BORING
- SOIL TUBE

LEGEND OF EARTH MATERIALS (USCS) BASED ON ASTM D2487, D2488

- FILL MATERIAL
- CLAY (CL or CH)
- SILT (ML or MH)
- PEAT and/or ORGANIC MATTER
- WELL-GRADED GRAVEL (GW)
- POORLY-GRADED GRAVEL (GP)
- SILTY GRAVEL (GM)
- CLAYEY GRAVEL (GC)
- POORLY-GRADED SAND (SP)
- WELL-GRADED SAND (SW)
- SILTY SAND (SM) or SANDY SILT
- CLAYEY SAND (SC) or SANDY LEAN CLAY
- COBBLES/BOULDERS
- IGNEOUS ROCK
- SEDIMENTARY ROCK
- METAMORPHIC ROCK

CONSISTENCY CLASSIFICATION FOR SOILS

According to the Standard Penetration Test (ASTM D-1586)

SPT N-value (blows/ft)	Granular	SPT N-value (blows/ft)	Cohesive
0 – 4	Very Loose	< 2	Very Soft
5 – 10	Loose	2 – 4	Soft
11 – 30	Medium Dense	5 – 8	Firm
31 – 50	Dense	9 – 15	Stiff
> 50	Very Dense	16 – 30	Very Stiff
		> 31	Hard

Note: Visual classification of earth materials are based on field inspection and are confirmed or revised with laboratory test results as necessary.

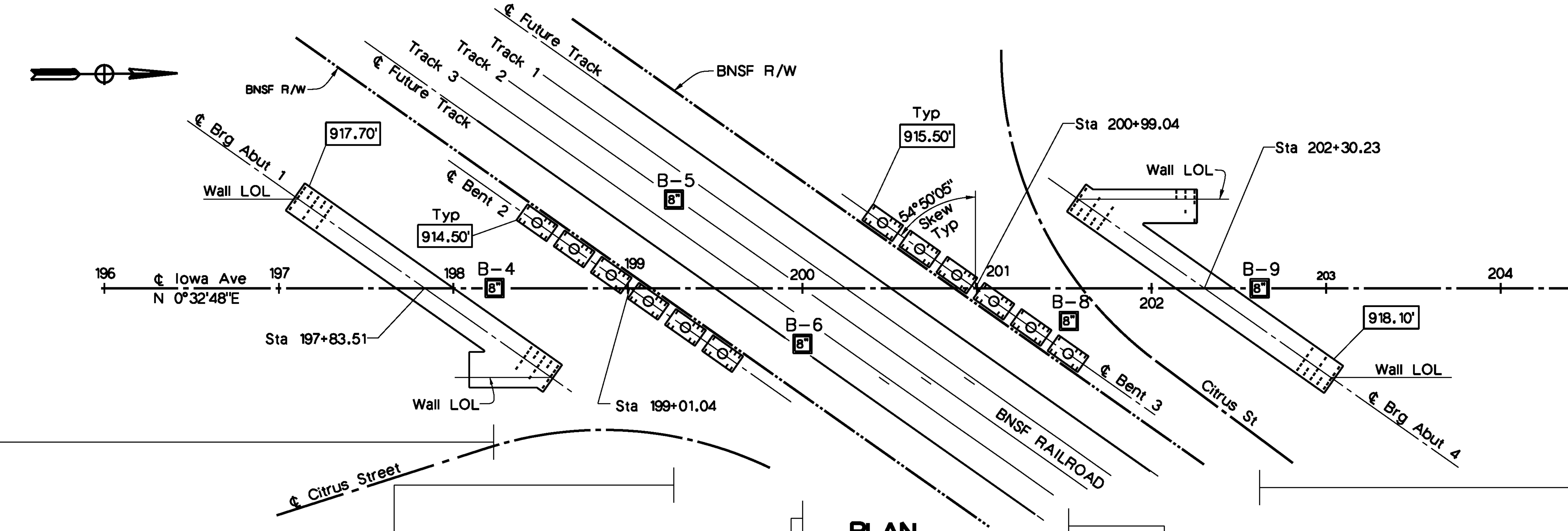

PLAN

1" = 40'

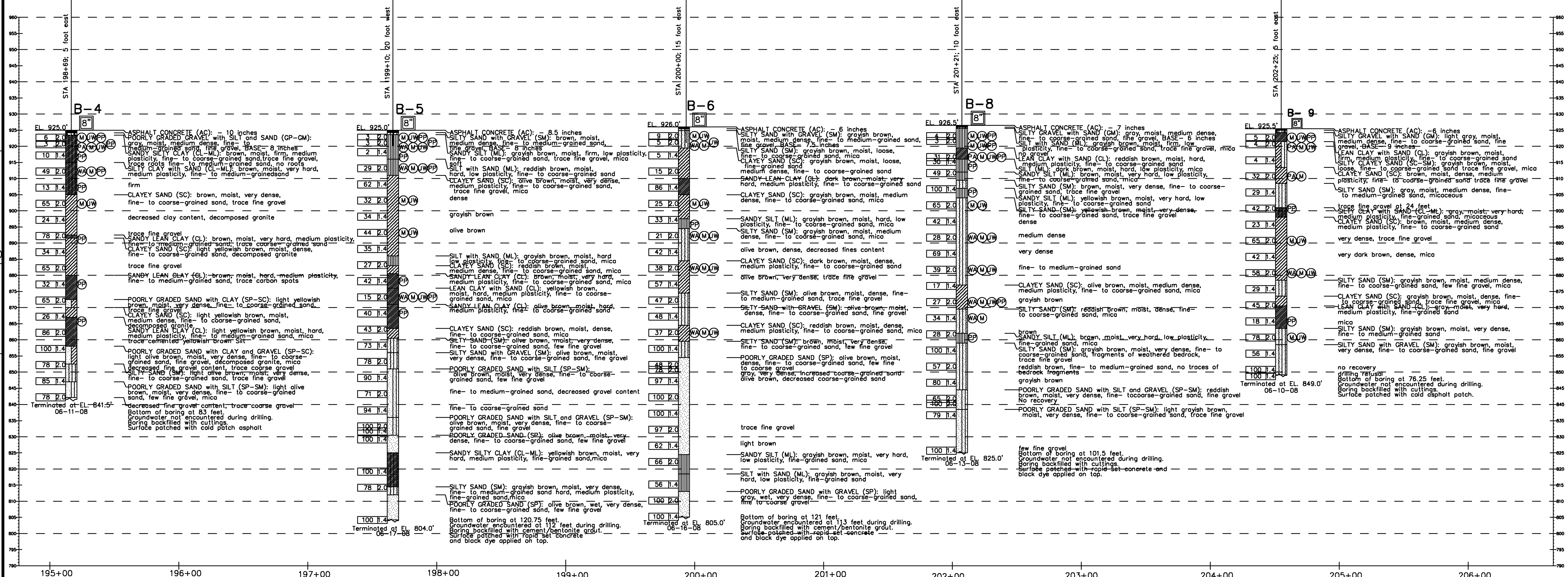

PROFILE

Vert: 1" = 10'
Horiz: 1" = 40'

Don't Dig...Until You Call U.S.A. Toll Free 1-800-227-2600 for the location of buried utility lines. Don't disrupt vital services. TWO WORKING DAYS BEFORE YOU DIG

PLANS PREPARED BY: DIAZ • YOURMAN & ASSOCIATES
1616 East 17th Street
Santa Ana, CA 92705
(714) 245-2950

REGISTERED PROFESSIONAL ENGINEER SAROJ P. WEERARATNE No. 2374 Exp. 9/30/12 GEOTECHNICAL STATE OF CALIFORNIA

REGISTERED PROFESSIONAL ENGINEER TODD W. DUDLEY No. C-39514 Exp. 12/31/2015 CIVIL STATE OF CALIFORNIA

AS-BUILT 08/01/14

MARK	REVISIONS	APPR	DATE
AS-BUILT	REVISED AS NOTED	TD	8/01/14

DESIGN BY S.W. DRAWN BY A.A. CHECKED BY S.W.

IOWA AVENUE GRADE SEPARATION

LOG OF TEST BORINGS

DWG NO. R-4237
S-27
SHEET 103 OF 133
SCALE: AS SHOWN

AS-BUILT

REGISTERED PROFESSIONAL ENGINEER
TODD W. DUDLEY
No. C-39514
Exp. 12/31/2015
CIVIL
STATE OF CALIFORNIA

AS-BUILT
08/01/14
NO AS-BUILT CHANGES

RETAINING WALL DRAWING INDEX

DRAWING NUMBER	TITLE
S-100	RETAINING WALL INDEX TO PLANS
S-101	RETAINING WALL NO. 1 GENERAL PLAN
S-102	RETAINING WALL NO. 2 GENERAL PLAN
S-103	RETAINING WALL NO. 3 GENERAL PLAN
S-104	RETAINING WALL NO. 4 GENERAL PLAN
S-105	RETAINING WALL NO. 4 LAYOUT NO. 1
S-106	RETAINING WALL NO. 4 LAYOUT NO. 2
S-107	RETAINING WALL NO. 5 GENERAL PLAN
S-108	RETAINING WALL NO. 6 GENERAL PLAN NO. 1
S-109	RETAINING WALL NO. 6 GENERAL PLAN NO. 2
S-110	RETAINING WALL NO. 6 LAYOUT NO. 1
S-111	RETAINING WALL NO. 6 LAYOUT NO. 2
S-112	RETAINING WALL NO. 6 LAYOUT NO. 3
S-113	RETAINING WALL NO. 7 GENERAL PLAN
S-114	RETAINING WALL NO. 7 LAYOUT NO. 1
S-115	RETAINING WALL NO. 7 LAYOUT NO. 2
S-116	RETAINING WALL NO. 8 GENERAL PLAN NO. 1
S-117	RETAINING WALL NO. 8 GENERAL PLAN NO. 2
S-118	RETAINING WALL NO. 8 LAYOUT NO. 1
S-119	RETAINING WALL NO. 8 LAYOUT NO. 2
S-120	RETAINING WALL ARCHITECTURAL DETAILS NO. 1
S-121	RETAINING WALL ARCHITECTURAL DETAILS NO. 2
S-122	RETAINING WALL ARCHITECTURAL DETAILS NO. 3
S-123	MECHANICALLY STABILIZED EMBANKMENT DETAIL NO. 1
S-124	MECHANICALLY STABILIZED EMBANKMENT DETAIL NO. 2
S-125	MECHANICALLY STABILIZED EMBANKMENT DETAIL NO. 3
S-126	MECHANICALLY STABILIZED EMBANKMENT DETAIL NO. 4
S-127	MECHANICALLY STABILIZED EMBANKMENT DETAIL NO. 5
S-128	LOG OF TEST BORINGS RETAINING WALL NO. 4
S-129	LOG OF TEST BORINGS RETAINING WALL NOs. 6, 7 & 8

STANDARD PLANS DATED MAY 2006 WITH ERRATAS

STD. NUMBER	TITLE
A10A	ACRONYMS AND ABBREVIATIONS (SHEET 1 OF 2)
A10B	ACRONYMS AND ABBREVIATIONS (SHEET 2 OF 2)
A10C	SYMBOLS (SHEET 1 OF 2)
A10D	SYMBOLS (SHEET 2 OF 2)
A62A	EXCAVATION AND BACKFILL MISCELLANEOUS DETAILS
B0-1	BRIDGE DETAILS
B0-3	BRIDGE DETAILS
B11-51	TUBULAR HAND RAILING
B11-54	CONCRETE BARRIER TYPE 26
B11-55	CONCRETE BARRIER TYPE 732

RECORD DRAWINGS
These Record Drawings (As-Builts) are based upon review and reliance on the design revisions during construction, field survey data, marked up prints from the Contractor and / or City Inspector, and a final site inspection.

SCALE: 1"=100'

LEGEND
STANDARD PLAN SHEET NO.
DETAIL NO.

Don't Dig...Until You Call U.S.A. Toll Free 811 for the location of buried utility lines. Don't disrupt vital services.
TWO WORKING DAYS BEFORE YOU DIG

PLANS PREPARED BY:
AECOM
901 VIA PIEMONTE
ONTARIO, CA 91764
(909) 579-3050

REGISTERED PROFESSIONAL ENGINEER
ROBERT PRICE
No. C56855
Exp. 6/30/13
CIVIL
STATE OF CALIFORNIA

MARK	REVISIONS	APPR	DATE

DESIGN BY R.A.P DRAWN BY S.D. CHECKED BY M.C./A.S.

IOWA AVENUE
GRADE SEPARATION

RETAINING WALL INDEX

DWG NO. R-4237
S-100
SHEET 104 OF 133
SCALE: AS SHOWN

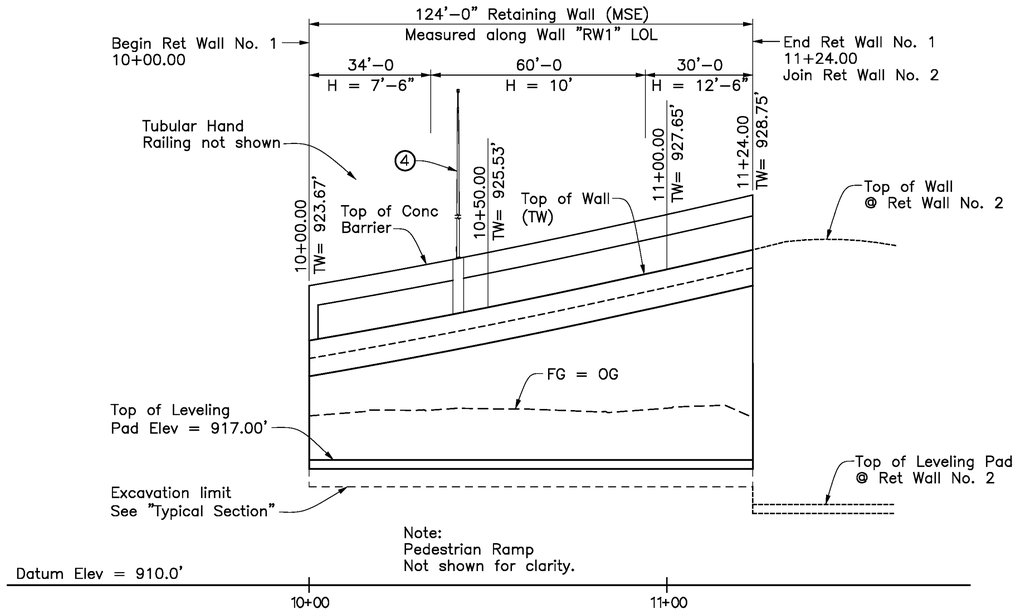

MIRRORED DEVELOPED ELEVATION

Horiz: 1" = 20'
Vert: 1" = 4'

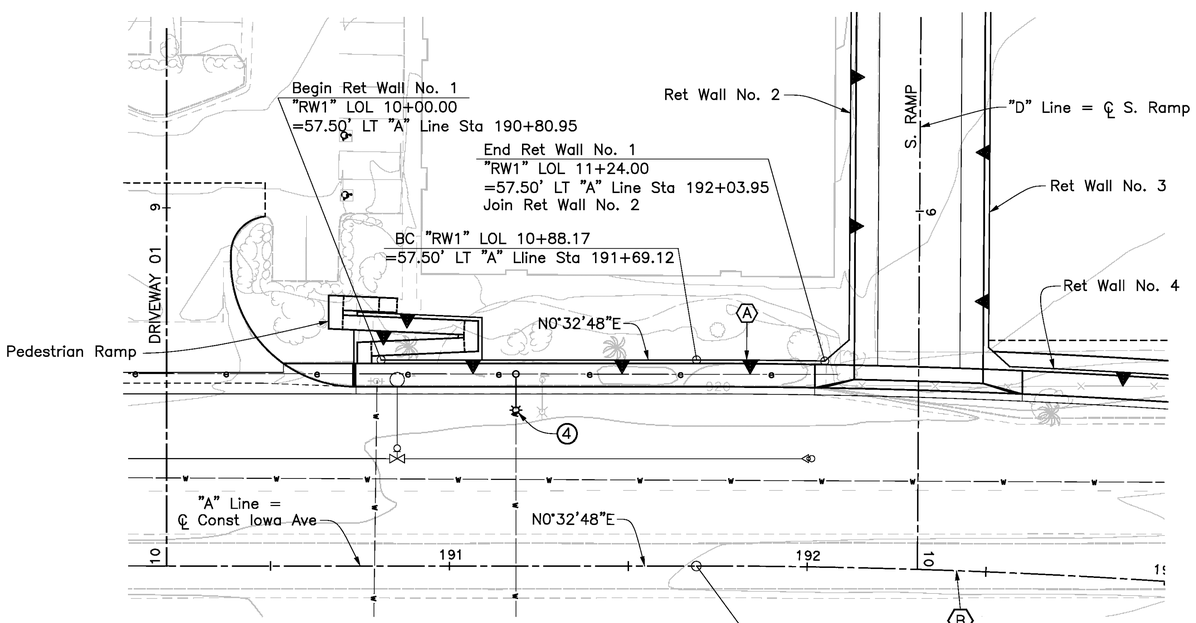

PLAN

1" = 20'

CURVE DATA	CURVE DATA
(A)	(B)
R = 2057.50'	R = 2000.00'
Δ = 5°59'52"	Δ = 6°08'50"
T = 17.92'	T = 107.39'
L = 35.83'	L = 214.58'

LEGEND

1. Concrete Barrier, Type 26 (MOD)
2. Tubular Hand Railing
3. Architectural Conc Texture, see "Note 1"
4. Barrier Mounted Electrolier, see "Note 5"

QUANTITIES

MECHANICALLY STABILIZED EMBANKMENT, LOCATION A	922	SQFT
STRUCTURAL CONCRETE, BARRIER SLAB	76	CY
ANTI-GRAFFITI COATING	1,372	SQFT
TUBULAR HANDRAILING	124	LF
CONCRETE BARRIER (TYPE 26 MODIFIED)	124	LF

NOTES

1. For Fractured Rib Texture Detail, see "Architectural Details" sheet.
2. Apply Anti-Graffiti Coating to textured face panels above FG, outside face of barrier slab and exterior & interior faces of concrete barrier or parapet.
3. For excavation dimensions "D" & "E", see "MSE Details No. 5" sheet.
4. For General Notes, see "MSE Details No. 1" sheet.
5. For barrier mounting details, see Bridge Plans "Typical Section" sheet. For all others, see "Street Lighting Plans".
6. Utilities shown are approximate, see "Road Plans".

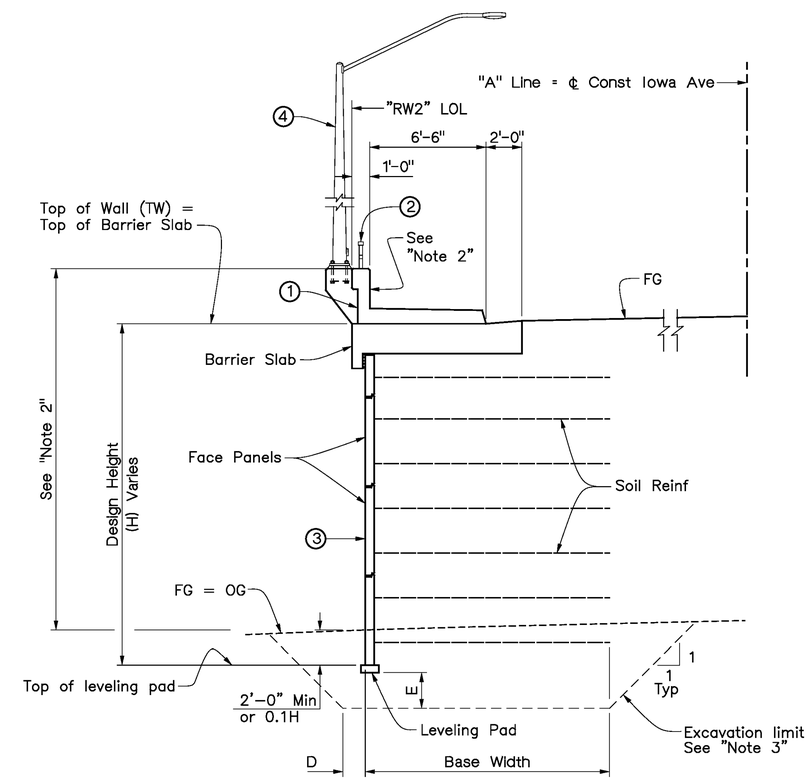

TYPICAL SECTION

1/4" = 1'-0"

RECEIVED PROFESSIONAL ENGINEER TODD W. DUDLEY No. C-39514 Exp. 12/31/2015 CIVIL STATE OF CALIFORNIA

AS-BUILT
08/01/14
NO AS-BUILT CHANGES

Don't Dig...Until You Call U.S.A. Toll Free 811 for the location of buried utility lines. Don't disrupt vital services.
TWO WORKING DAYS BEFORE YOU DIG

PLANS PREPARED BY:
AECOM
901 VIA PIEMONTE
ONTARIO, CA 91764
(909) 579-3050

REGISTERED PROFESSIONAL ENGINEER ROBERT PRICE No. C56855 Exp. 6/30/13 CIVIL STATE OF CALIFORNIA

MARK	REVISIONS	APPR	DATE

DESIGN BY R.A.P DRAWN BY S.D. CHECKED BY M.C./A.S.

IOWA AVENUE
GRADE SEPARATION

RETAINING WALL NO. 1
GENERAL PLAN

DWG NO. R-4237
S-101
SHEET 105 OF 133
SCALE: AS SHOWN

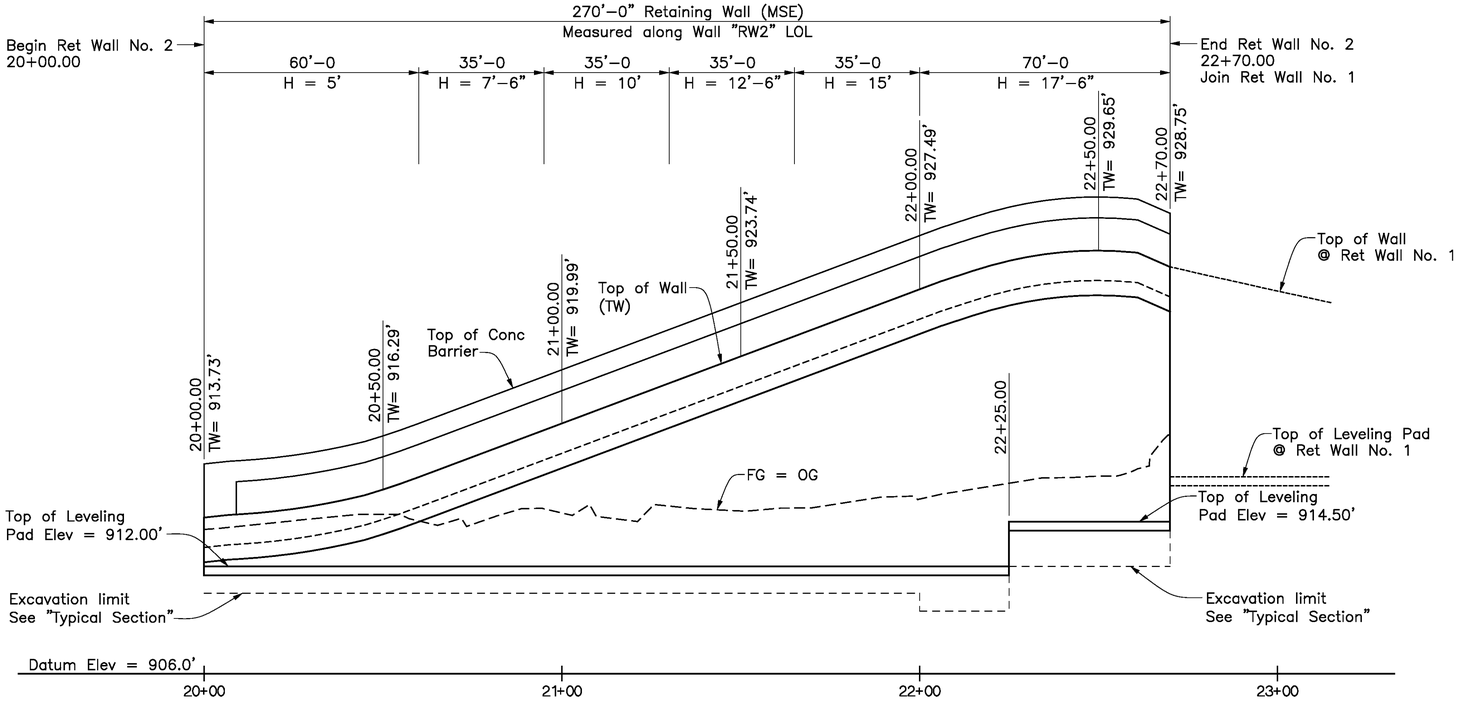

DEVELOPED ELEVATION

Horiz: 1" = 20'
Vert: 1" = 4'

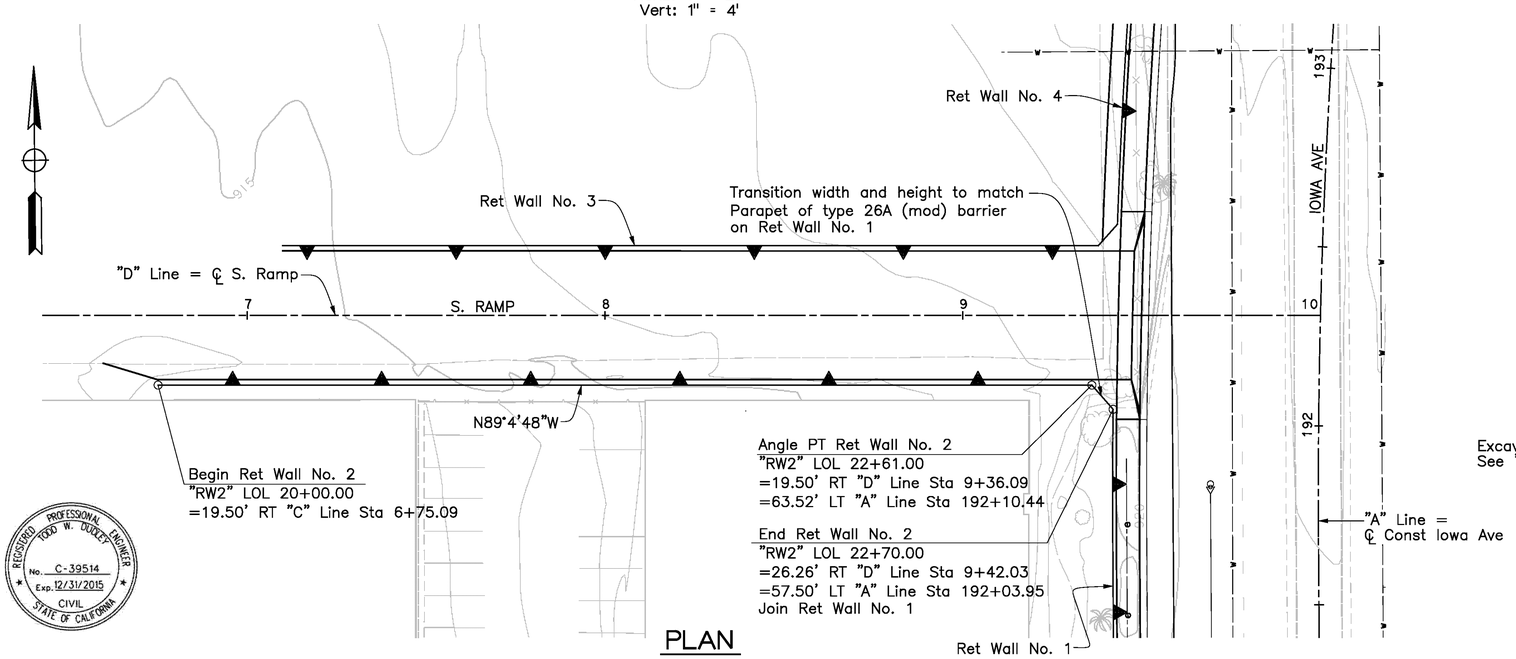

PLAN

1" = 20'

REGISTERED PROFESSIONAL ENGINEER
TODD W. DUDLEY
No. C-39514
Exp. 12/31/2015
CIVIL
STATE OF CALIFORNIA

AS-BUILT
08/01/14
NO AS-BUILT CHANGES

LEGEND

1. Concrete Barrier, Type 732 (MOD)
2. Architectural Conc Texture, see "Note 1"

NOTES

1. For Fractured Rib Texture Detail, see "Architectural Details" sheet.
2. Apply Anti-Graffiti Coating to textured face panels above FG, outside face of barrier slab and exterior & interior faces of concrete barrier or parapet.
3. For excavation dimensions "D" & "E", see "MSE Details No. 5" sheet.
4. For General Notes, see "MSE Details No. 1" sheet.
5. Utilities shown are approximate, see "Road Plans".

QUANTITIES

MECHANICALLY STABILIZED EMBANKMENT, LOCATION B	2,238	SQFT
STRUCTURAL CONCRETE, BARRIER SLAB	143	CY
ANTI-GRAFFITI COATING	3,557	SQFT
CONCRETE BARRIER (TYPE 732 MODIFIED)	270	LF

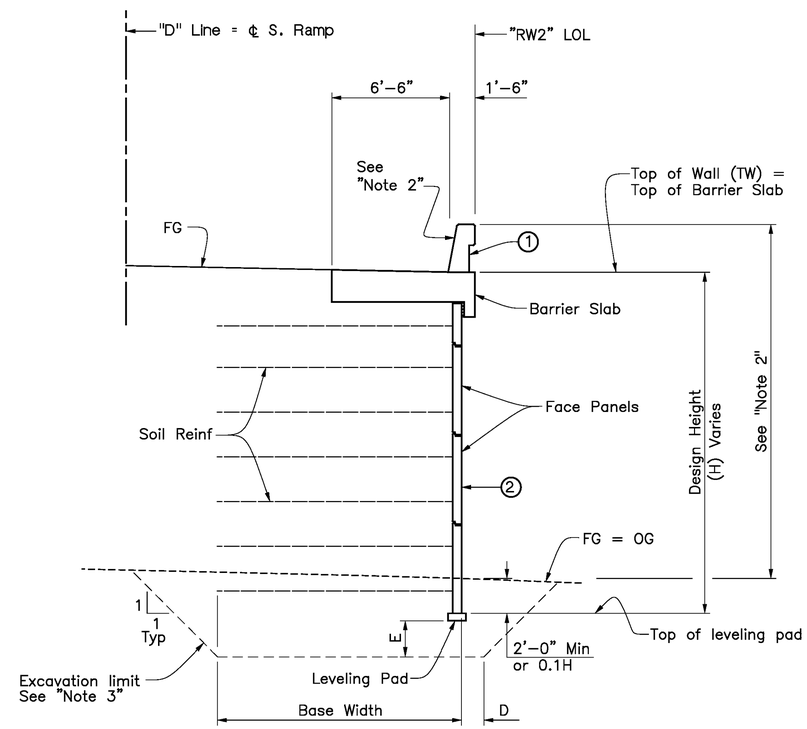

TYPICAL SECTION

1/4" = 1'-0"

Don't Dig...Until You Call U.S.A. Toll Free
811
for the location of buried utility lines.
Don't disrupt vital services.
TWO WORKING DAYS BEFORE YOU DIG

PLANS PREPARED BY:
AECOM
901 VIA PIEMONTE
ONTARIO, CA 91764
(909) 579-3050

REGISTERED PROFESSIONAL ENGINEER
ROBERT PRICE
No. C56855
Exp. 6/30/13
CIVIL
STATE OF CALIFORNIA

MARK	REVISIONS	APPR	DATE

DESIGN BY R.A.P. DRAWN BY S.D. CHECKED BY M.C./A.S.

IOWA AVENUE
GRADE SEPARATION

RETAINING WALL NO. 2
GENERAL PLAN

DWG NO. R-4237
S-102
SHEET 106 OF 133
SCALE: AS SHOWN

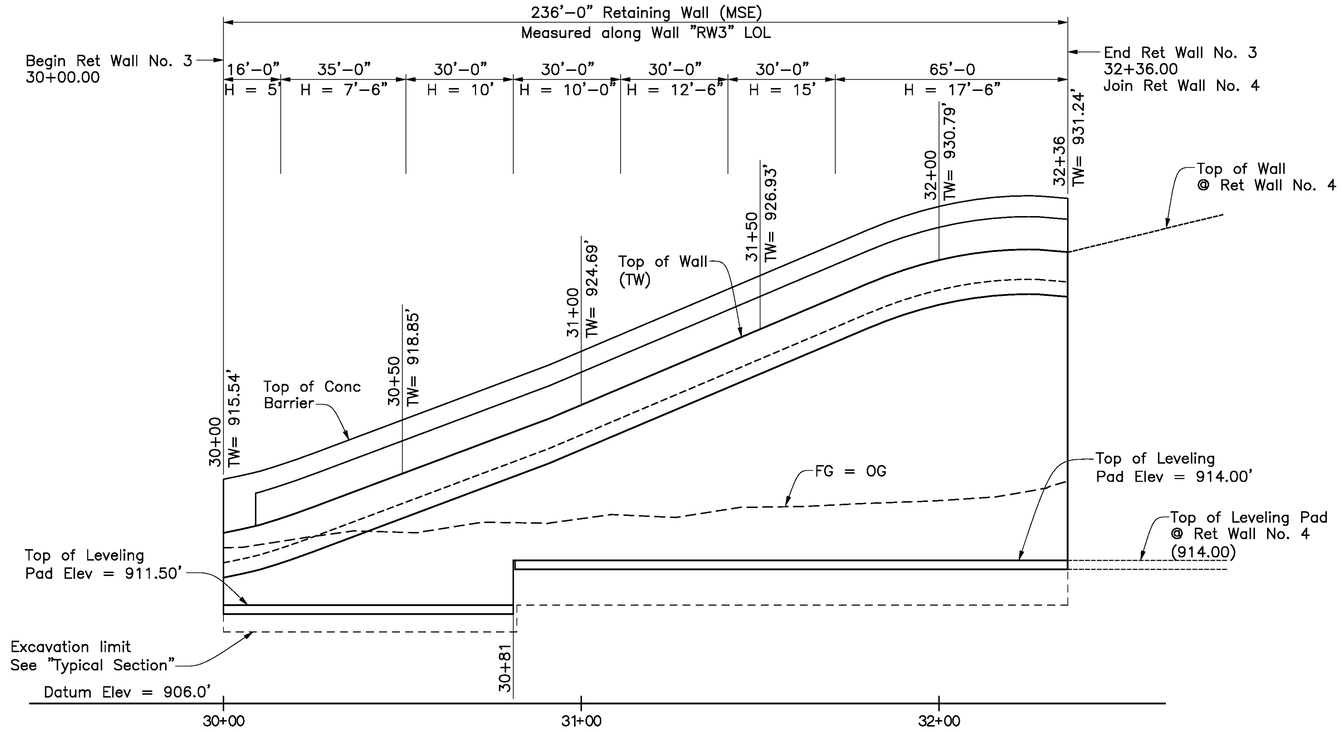

MIRRORED DEVELOPED ELEVATION

Horiz: 1" = 20'
Vert: 1" = 4'

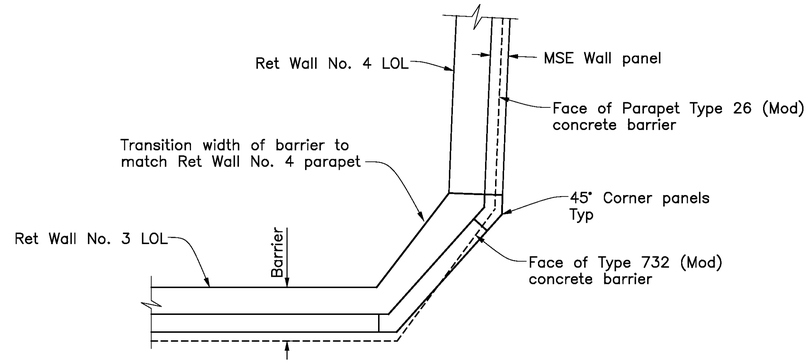

RETAINING WALL/MSE WALL JOIN DETAIL

No Scale

QUANTITIES

MECHANICALLY STABILIZED EMBANKMENT, LOCATION C	2,301	SQFT
STRUCTURAL CONCRETE, BARRIER SLAB	125	CY
ANTI-GRAFFITI COATING	3,378	SQFT
CONCRETE BARRIER (TYPE 732 MODIFIED)	236	LF

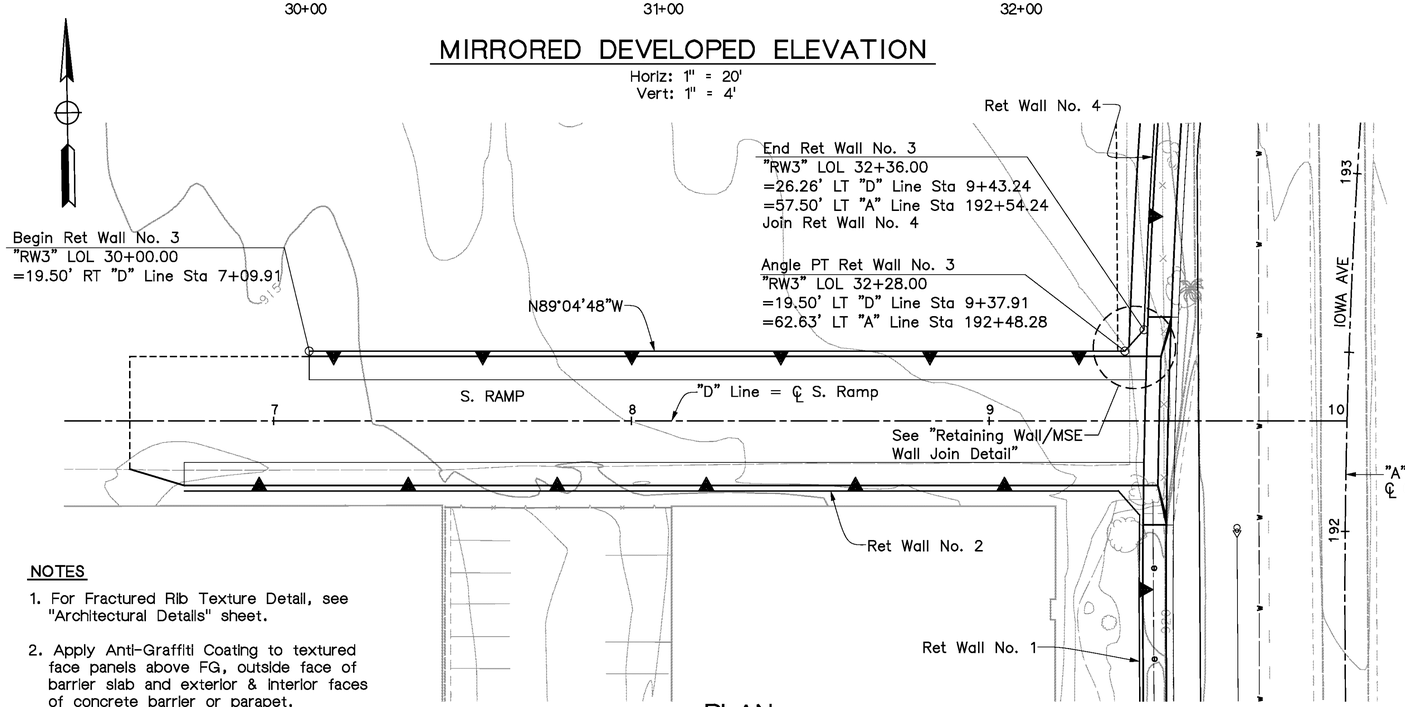

PLAN

1" = 20'

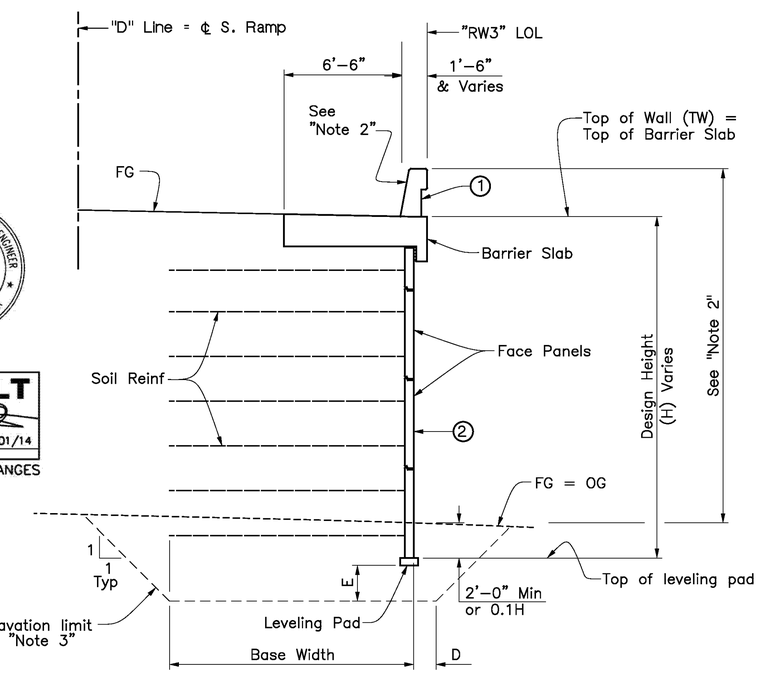

TYPICAL SECTION

1/4" = 1'-0"

PROFESSIONAL ENGINEER
REGISTERED
TODD W. DUDLEY
No. C-39514
Exp. 12/31/2015
CIVIL
STATE OF CALIFORNIA

AS-BUILT
08/01/14
NO AS-BUILT CHANGES

NOTES

1. For Fractured Rib Texture Detail, see "Architectural Details" sheet.
2. Apply Anti-Graffiti Coating to textured face panels above FG, outside face of barrier slab and exterior & interior faces of concrete barrier or parapet.
3. For excavation dimensions "D" & "E", see "MSE Details No. 5" sheet.
4. For General Notes, see "MSE Details No. 1" sheet.
5. Utilities shown are approximate, see "Road Plans".

LEGEND

1. Concrete Barrier, Type 732 (MOD)
2. Architectural Conc Texture, see "Note 1"

Don't Dig...Until You Call U.S.A. Toll Free
811
for the location of buried utility lines.
Don't disrupt vital services.
TWO WORKING DAYS BEFORE YOU DIG

PLANS PREPARED BY:
AECOM
901 VIA PIEMONTE
ONTARIO, CA 91764
(909) 579-3050

REGISTERED PROFESSIONAL ENGINEER
ROBERT PRICE
No. C56855
Exp. 6/30/13
CIVIL
STATE OF CALIFORNIA

MARK	REVISIONS	APPR	DATE

DESIGN BY R.A.P. DRAWN BY S.D. CHECKED BY M.C./A.S.

IOWA AVENUE
GRADE SEPARATION

RETAINING WALL NO. 3
GENERAL PLAN

DWG NO. R-4237
S-103
SHEET 107 OF 133
SCALE: AS SHOWN

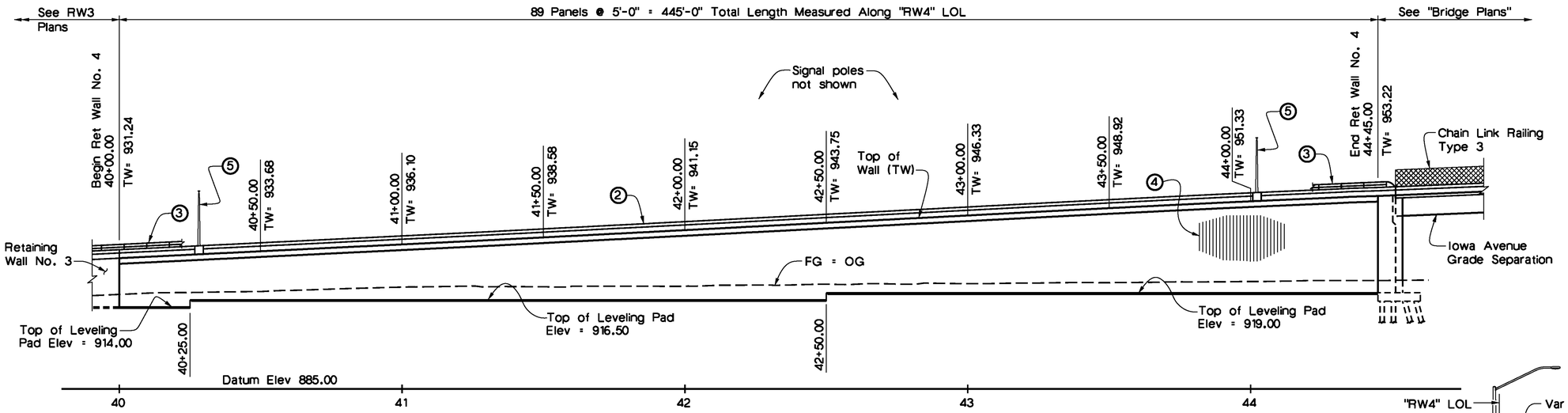

DEVELOPED MIRROR ELEVATION

1" = 20'

CURVE DATA

Ⓐ	Ⓑ	Ⓒ
R = 2057.50'	R = 1942.50'	R = 1943.02'
Δ = 3°47'17"	Δ = 1°25'58"	Δ = 4°39'45"
T = 68.04'	T = 24.29'	T = 79.10'
L = 136.02'	L = 48.57'	L = 158.12'

CURVE DATA

Ⓓ	Ⓔ
R = 2000.00'	R = 2000.00'
Δ = 6°08'50"	Δ = 6°08'50"
T = 107.39'	T = 107.39'
L = 214.58'	L = 214.58'

QUANTITIES

MECHANICALLY STABILIZED EMBANKMENT, LOCATION D	10,704	SQFT
STRUCTURAL CONCRETE, BARRIER SLAB	244	CY
ANTI-GRAFFITI COATING	11,988	SQFT
TUBULAR HANDRAILING	433	LF
CONCRETE BARRIER (TYPE 26 MODIFIED)	433	LF

NOTES

1. For excavation dimensions, see "MSE Details No. 5" sheet.
2. For Architectural Texture details, see "Architectural Details" sheets.
3. Apply Anti-Graffiti Coating to textured face panels above FG, outside face of barrier slab and exterior & interior faces of concrete barrier or parapet.
4. For traffic signal pole anchorage and barrier slab details, see "MSE Details No. 3" sheet.
5. For barrier mounting details, see Bridge Plans "Typical Section" sheet. For all others, see "Street Lighting Plans".
6. For General Notes, see "MSE Details No. 1" sheet.

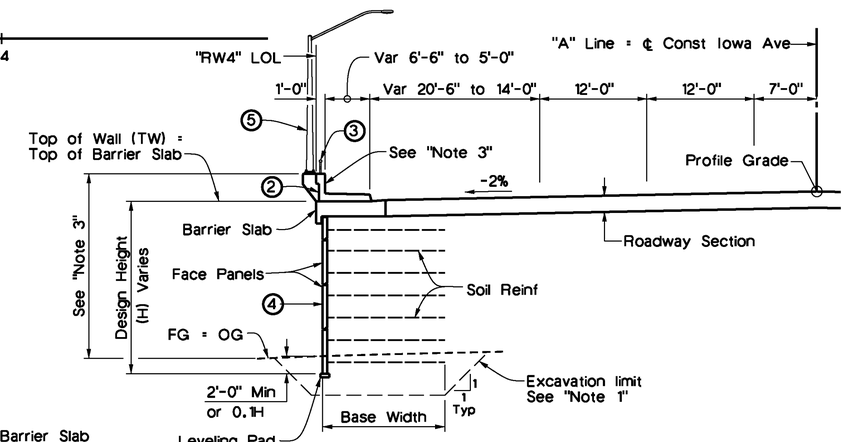

TYPICAL SECTION

⅛" = 1'-0"

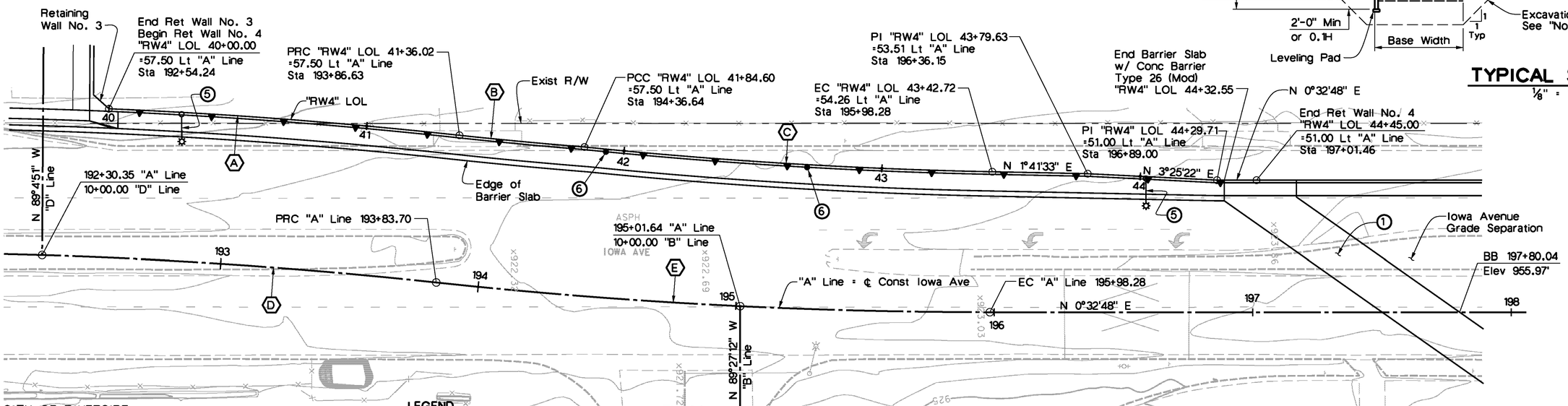

PLAN

1" = 20'

CITY OF RIVERSIDE BENCHMARKS

BM #J7-M2 Elev: 871.063'
FD PK NAIL & CITY ENG TAG IN W'LY WALL OF CATCH BASIN, 1' N. ON N'LY CURB OF COLUMBIA AVE, 155' E'LY OF E. LA CADENA DR.

BM #J8-F2 Elev: 952.776'
FD CHS SQ AT SE TOP OF CATCH BASIN ON N'LY SIDE OF CENTER ST, E. OF TRANSIT AVE

LEGEND

1. Structure Approach Type N(30S)
2. Concrete Barrier, Type 26 (MOD)
3. Tubular Hand Railing
4. Architectural Conc Texture, see "Note 2"
5. Barrier Mounted Electrolier, see "Note 5"
6. Traffic Signal Pole, See "Road Plans" & "Note 4"

Don't Dig...Until You Call U.S.A. Toll Free 811 for the location of buried utility lines. Don't disrupt vital services.
TWO WORKING DAYS BEFORE YOU DIG

PLANS PREPARED BY:
AECOM
901 VIA PIEMONTE
ONTARIO, CA 91764
(909) 579-3050

REGISTERED PROFESSIONAL ENGINEER ROBERT PRICE No. C56855 Exp. 6/30/13 CIVIL STATE OF CALIFORNIA

REGISTERED PROFESSIONAL ENGINEER ROOD W. DUDLEY No. C-39514 Exp. 12/31/2015 CIVIL STATE OF CALIFORNIA

AS-BUILT 08/01/14

MARK	REVISIONS	APPR	DATE
AS-BUILT	REVISED AS NOTED	TD	8/01/14

DESIGN BY R.A.P. DRAWN BY S.D. CHECKED BY M.C./A.S.

IOWA AVENUE
GRADE SEPARATION
RETAINING WALL NO. 4
GENERAL PLAN

DWG NO. R-4237
S-104
SHEET 108 OF 133
SCALE: AS SHOWN

AS-BUILT

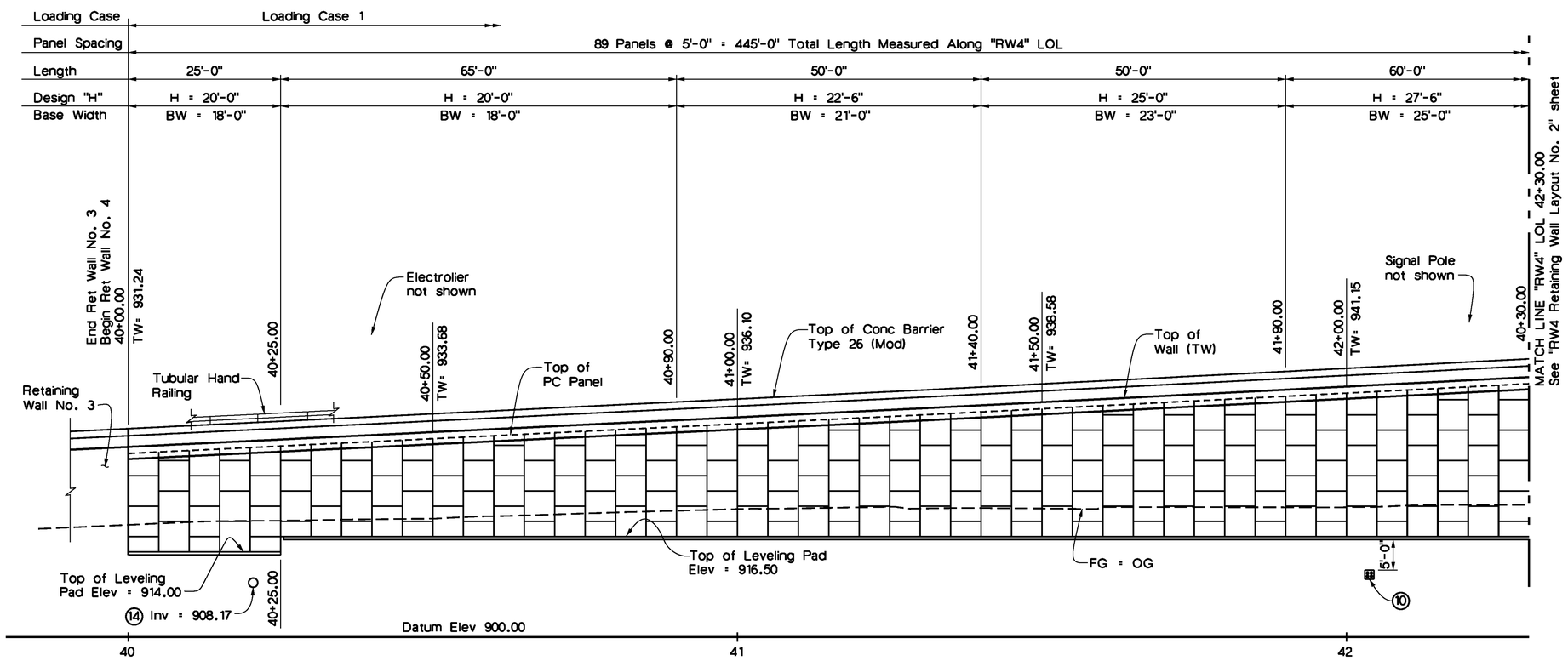

DEVELOPED MIRROR ELEVATION

1" = 10'

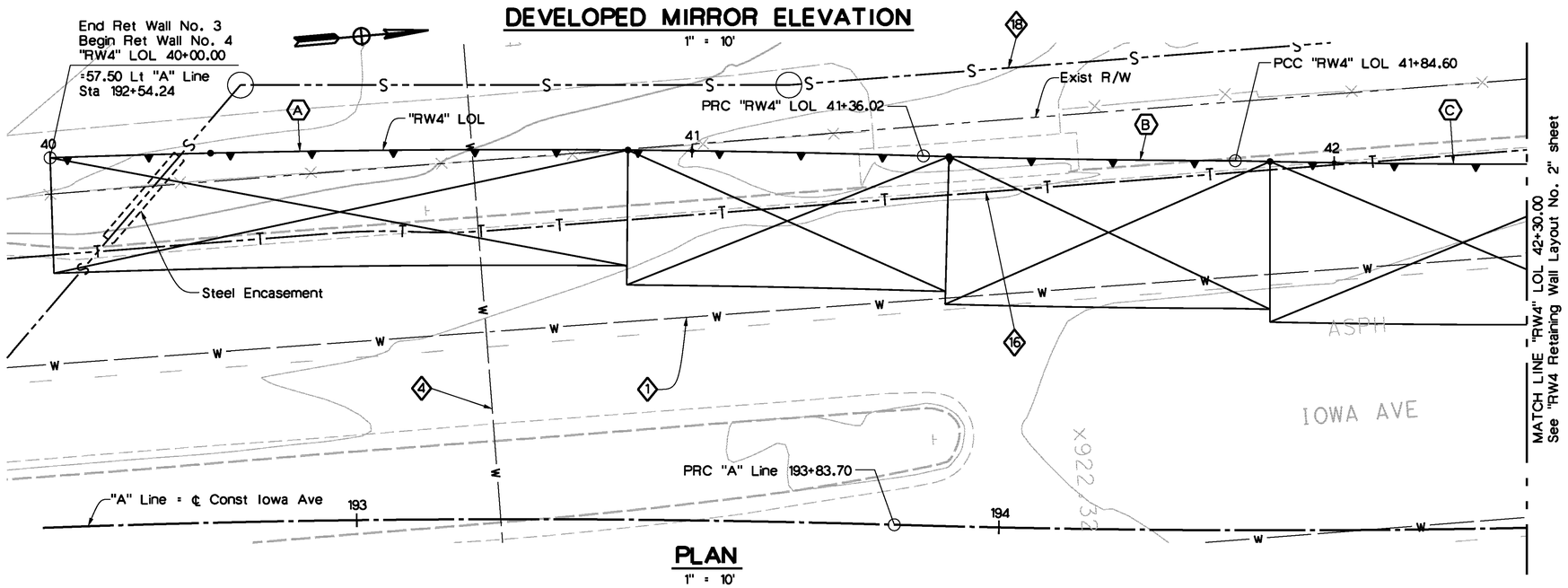

PLAN

1" = 10'

RELOCATED UTILITY LEGEND

- 16 AT&T Fiber Optic (4 ducts encased in conc) (protect in place)
- 18 18"Ø VCP Sewer (City of Riverside), (protect in place)

EXISTING UTILITY LEGEND

- 1 42"Ø CP (abandonded)
- 4 6"Ø STL (City Water) (abandoned)

NOTES

1. For Typical Section, see "Retaining Wall No. 4 General Plan" sheet.
2. Utilities shown are approximate, see "Road Plans". Contractor shall verify utility locations and status prior to excavation.

LEGEND

- Indicates Base Limits of Welded Wire Mat (Soil Reinforcement)
- (X) Curve identification, see "General Plan" for data.

REGISTERED PROFESSIONAL ENGINEER TODD W. DUDLEY No. C-39514 Exp. 12/31/2015 CIVIL STATE OF CALIFORNIA

AS-BUILT 08/01/14

Don't Dig...Until You Call U.S.A. Toll Free 811 for the location of buried utility lines. Don't disrupt vital services. TWO WORKING DAYS BEFORE YOU DIG

PLANS PREPARED BY:
AECOM
901 VIA PIEMONTE
ONTARIO, CA 91764
(909) 579-3050

REGISTERED PROFESSIONAL ENGINEER ROBERT PRICE No. C56855 Exp. 6/30/13 CIVIL STATE OF CALIFORNIA

MARK	REVISIONS	APPR	DATE
AS-BUILT	REVISED AS NOTED	TD	8/01/14

DESIGN BY R.A.P. DRAWN BY S.D. CHECKED BY M.C./A.S.

IOWA AVENUE GRADE SEPARATION
RETAINING WALL NO. 4 LAYOUT NO. 1

DWG NO. R-4237
S-105
SHEET 109 OF 133
SCALE: AS SHOWN

AS-BUILT

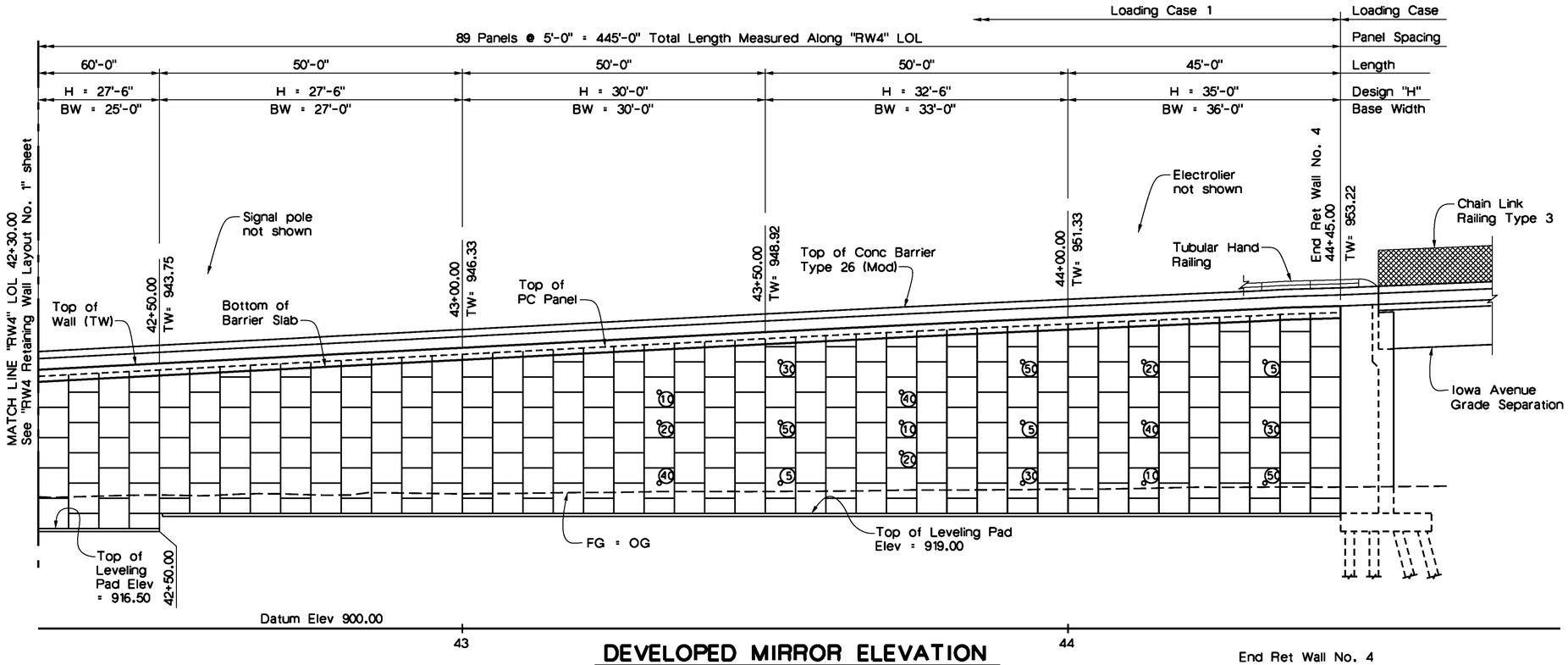

DEVELOPED MIRROR ELEVATION

1" = 10'

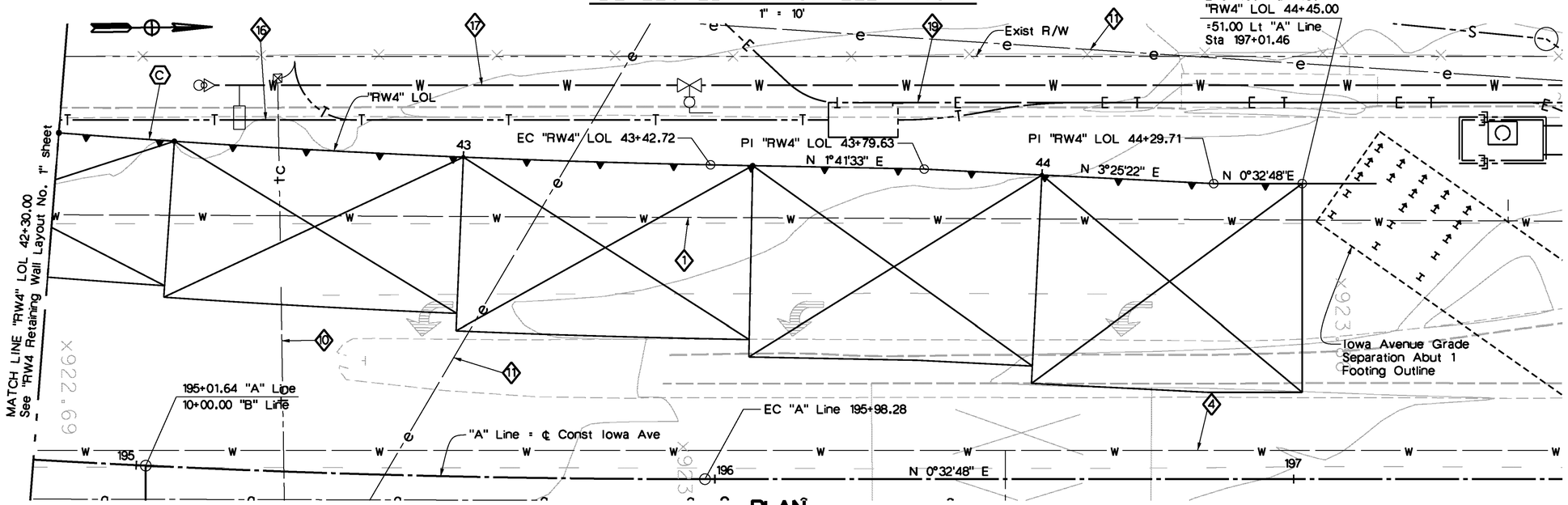

PLAN

1" = 10'

RELOCATED UTILITY LEGEND

- 16 AT&T Fiber Optic (4 ducts encased) (protect in place)
- 17 8"Ø Water (City) (protect in place)
- 19 Electric City (protect in place)

EXISTING UTILITY LEGEND

- 1 42"Ø CP (City Water) (abandonded)
- 4 14"Ø STL (City Water) (abandonded)
- 10 AT&T (abandoned)
- 11 Electric (abandoned)

NOTES

1. For Typical Section, see "Retaining Wall No. 4 General Plan" sheet.
2. Utilities shown are approximate, see "Road Plans". Contractor shall verify utility locations and status prior to excavation.

LEGEND

- Indicates Base Limits of Welded Wire Mat (Soil Reinforcement)
- Indicates Location of Inspection Wire
- (X) Indicates Interval in years from Construction to Removal of Inspection Wire.
- (X) Curve identification, see "General Plan" for data.

REGISTERED PROFESSIONAL ENGINEER TODD W. DOUGLAS No. C-39514 Exp. 12/31/2015 CIVIL STATE OF CALIFORNIA

AS-BUILT 08/01/14

Don't Dig...Until You Call U.S.A. Toll Free 811 for the location of buried utility lines. Don't disrupt vital services. TWO WORKING DAYS BEFORE YOU DIG

PLANS PREPARED BY:
AECOM
901 VIA PIEMONTE
ONTARIO, CA 91764
(909) 579-3050

REGISTERED PROFESSIONAL ENGINEER ROBERT PRICE No. C56855 Exp. 6/30/13 CIVIL STATE OF CALIFORNIA

MARK	REVISIONS	APPR	DATE
AS-BUILT	REVISED AS NOTED	TD	8/01/14

DESIGN BY R.A.P. DRAWN BY S.D. CHECKED BY M.C./A.S.

IOWA AVENUE GRADE SEPARATION

RETAINING WALL NO. 4 LAYOUT NO. 2

DWG NO. R-4237
S-106
SHEET 110 OF 133
SCALE: AS SHOWN

AS-BUILT

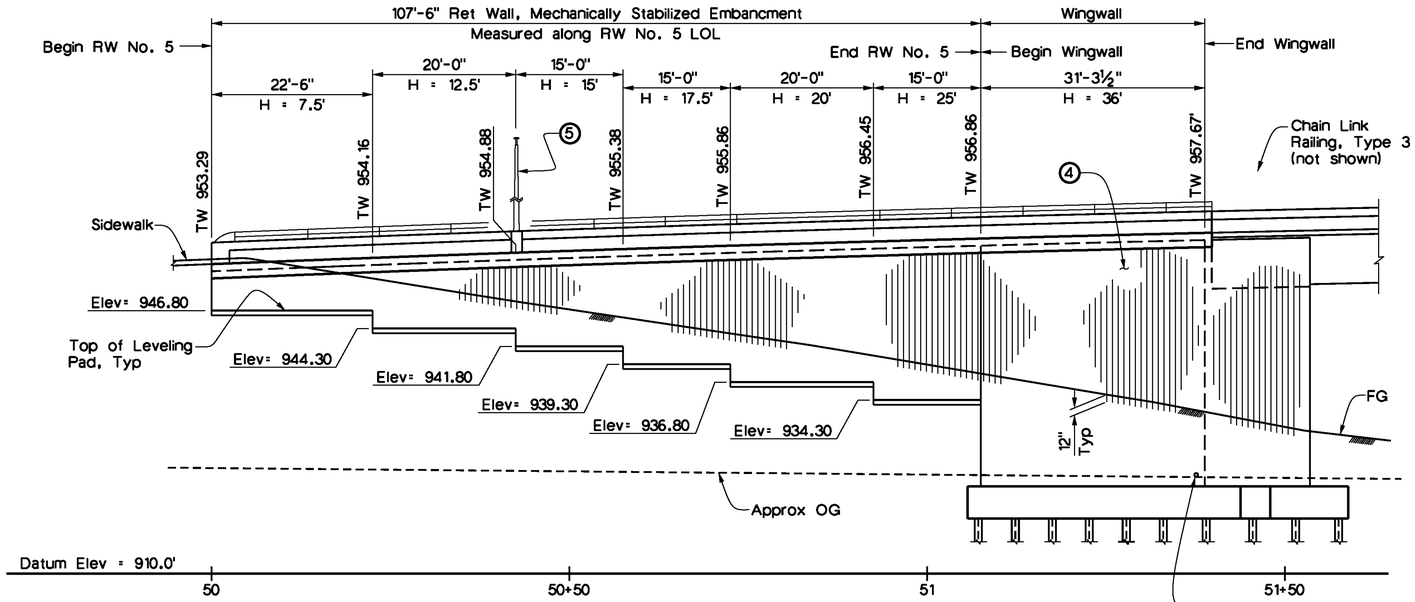

DEVELOPED ELEVATION

1" = 10'

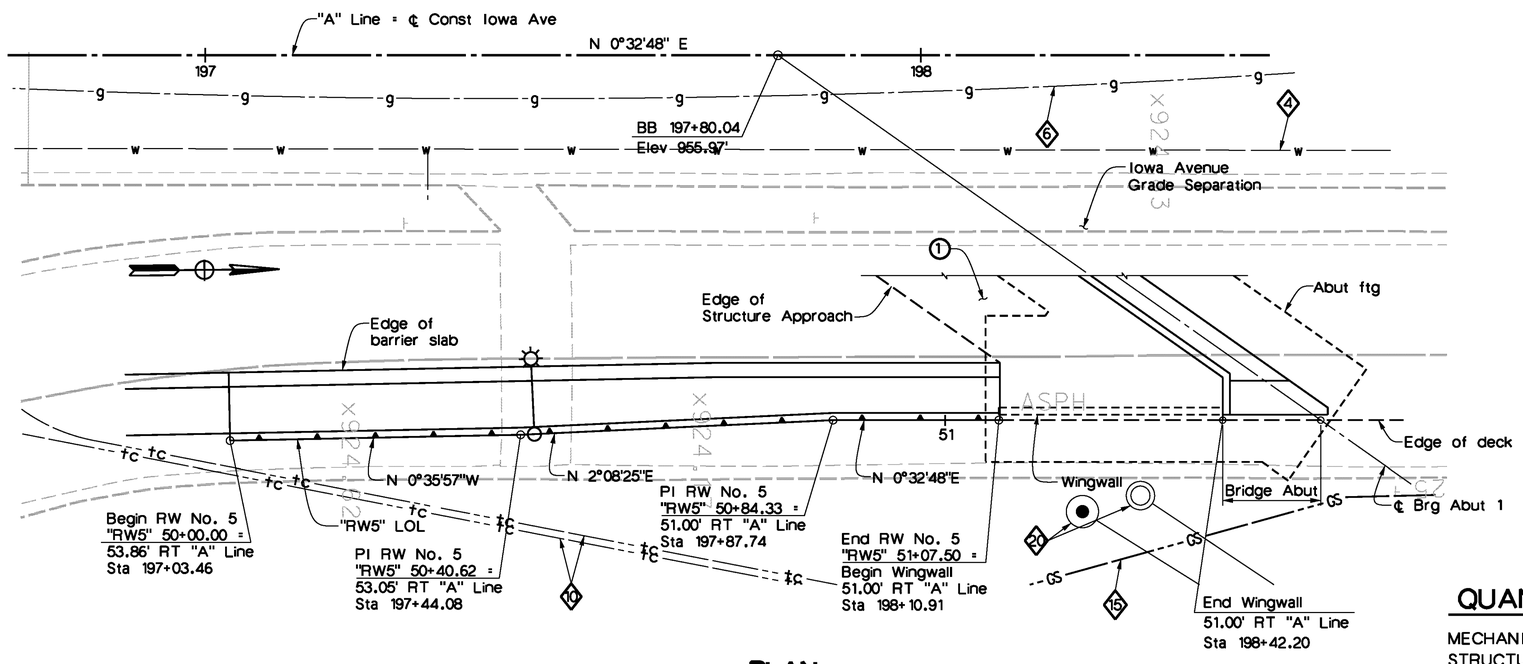

PLAN

1" = 10'

Note: Wingwall & Abutment piles not shown.

LEGEND

1. Structure Approach Type N(30S)
2. Concrete Barrier, Type 26 (MOD)
3. Tubular Hand Railing
4. Architectural Conc Texture, see "Note 2"
5. Barrier Mounted Electrolier, see "Note 4"

NOTES

1. For excavation dimensions, see "MSE Details No. 5" sheet.
2. For Architectural Texture details, see "Architectural Details" sheets.
3. Apply Anti-Graffiti Coating to textured face panels above FG, outside face of barrier slab and exterior & interior faces of concrete barrier or parapet.
4. For barrier mounting details, see Bridge Plans "Typical Section" sheet. For all others, see "Street Lighting Plans".
5. For General Notes, see "MSE Details No. 1" sheet.
6. Utilities shown are approximate, see "Road Plans". Contractor shall verify utility locations and status prior to excavation.

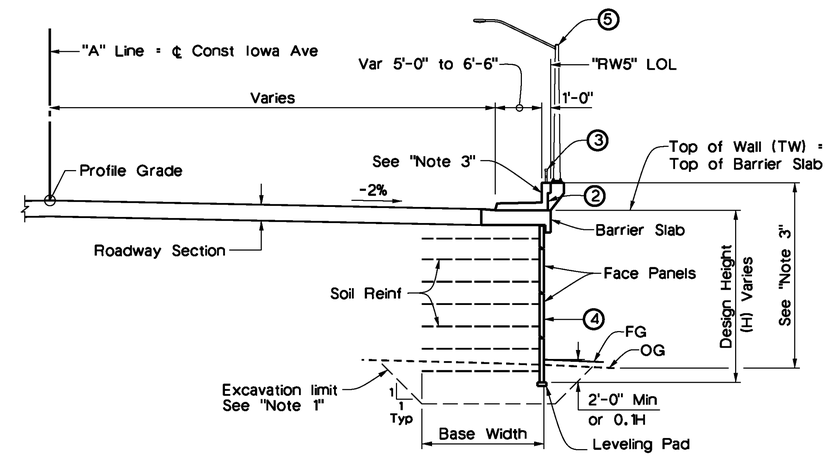

TYPICAL SECTION

⅛" = 1'-0"

RELOCATED UTILITY LEGEND

- 15 — 12" Gas, SCG (protect in place)
- 20 — Water blowoff valves, City Water (protect in place)

EXISTING UTILITY LEGEND

- 6 — 12"Ø Gas SCG (abandoned)
- 4 — 6"Ø STL (City Water) (abandoned)
- 10 — AT&T Fiber Optic (abandoned)

QUANTITIES

MECHANICALLY STABILIZED EMBANKMENT, LOCATION E	1,349	SQFT
STRUCTURAL CONCRETE, BARRIER SLAB	62	CY
ANTI-GRAFFITI COATING	1,856	SQFT
TUBULAR HANDRAILING	109	LF
CONCRETE BARRIER (TYPE 26 MODIFIED)	109	LF

REGISTERED PROFESSIONAL ENGINEER TODD W. DUDLEY No. C-39514 Exp. 12/31/2015 CIVIL STATE OF CALIFORNIA

AS-BUILT 08/01/14

CITY OF RIVERSIDE BENCHMARKS

BM #J7-M2 Elev: 871.063'
FD PK NAIL & CITY ENG TAG IN W'LY WALL OF CATCH BASIN, 1' N. ON N'LY CURB OF COLUMBIA AVE, 155' E'LY OF E. LA CADENA DR.

BM #J8-F2 Elev: 952.776'
FD CHS SQ AT SE TOP OF CATCH BASIN ON N'LY SIDE OF CENTER ST, E. OF TRANSIT AVE

Don't Dig...Until You Call U.S.A. Toll Free 811 for the location of buried utility lines. Don't disrupt vital services. TWO WORKING DAYS BEFORE YOU DIG

PLANS PREPARED BY:
AECOM
901 VIA PIEMONTE
ONTARIO, CA 91764
(909) 579-3050

REGISTERED PROFESSIONAL ENGINEER ROBERT PRICE No. C56855 Exp. 6/30/13 CIVIL STATE OF CALIFORNIA

MARK	REVISIONS	APPR	DATE
AS-BUILT	REVISED AS NOTED	TD	8/01/14

DESIGN BY R.A.P DRAWN BY S.D. CHECKED BY M.C./A.S.

IOWA AVENUE GRADE SEPARATION

RETAINING WALL NO. 5 GENERAL PLAN

DWG NO. R-4237
S-107
SHEET 111 OF 133
SCALE: AS SHOWN

AS-BUILT

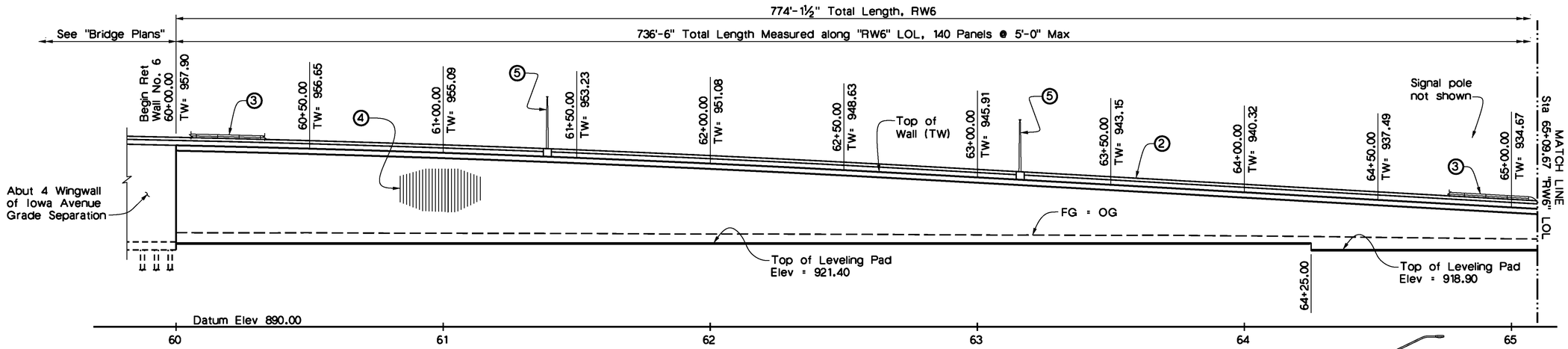

DEVELOPED MIRROR ELEVATION

1" = 20'

LEGEND

1. Structure Approach Type N(30S)
2. Concrete Barrier, Type 26 (MOD)
3. Tubular Hand Railing
4. Architectural Conc Texture, see "Note 2"
5. Barrier Mounted Electrolier, see "Note 5"

⇦ Direction of traffic

NOTES

1. For excavation dimension, see "MSE Details No. 5" sheet.
2. For Fractured Rib Texture Detail, "Architectural Details" sheet.
3. Apply Anti-Graffiti Coating to textured Face Panels above FG, outside face of Barrier Slab and exterior & interior faces of concrete Barrier or Parapet.
4. For Traffic Signal Pole Anchorage and Barrier Slab details, see "MSE Details No. 3" sheet.
5. For barrier mounting details, see Bridge Plans "Typical Section" sheet. For all others, see "Street Lighting Plans".
6. For "General Notes", see "MSE Details No. 1" sheet.

QUANTITIES

MECHANICALLY STABILIZED EMBANKMENT, LOCATION F	14,343	SQFT
STRUCTURAL CONCRETE, BARRIER SLAB	432	CY
ANTI-GRAFFITI COATING	19,267	SQFT
TUBULAR HANDRAILING	534	LF
CONCRETE BARRIER (TYPE 26 MODIFIED)	534	LF
CONCRETE BARRIER (TYPE 732 MODIFIED)	227	LF

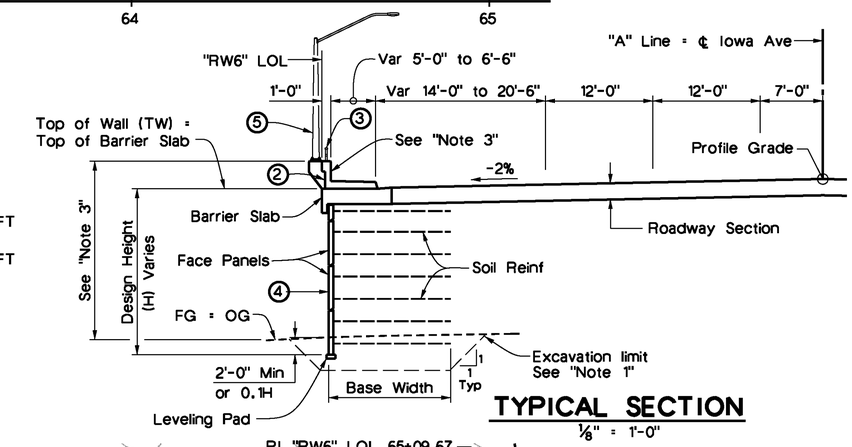

TYPICAL SECTION

⅛" = 1'-0"

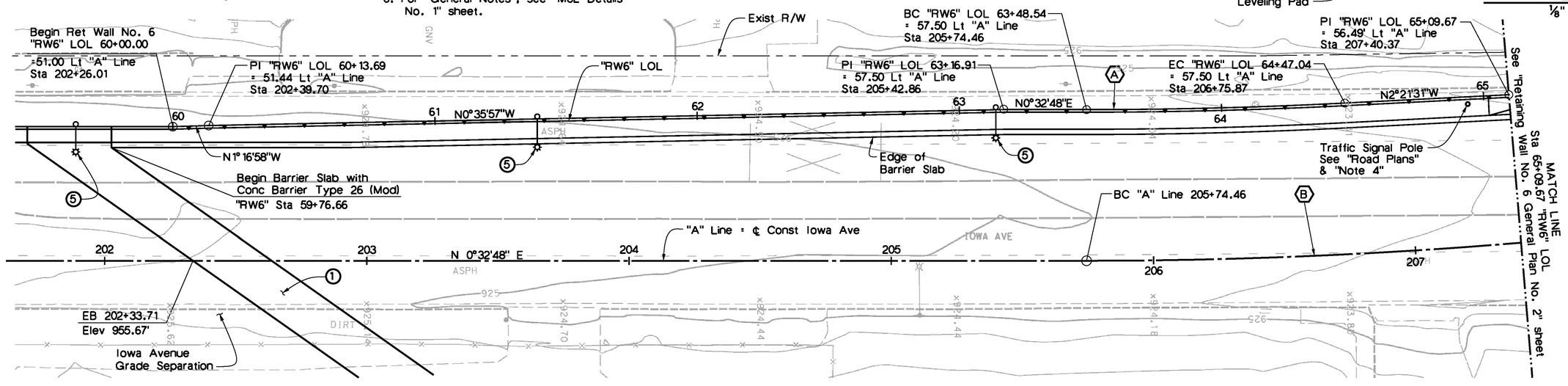

CURVE DATA

(A)	(B)
R = 1942.50'	R = 2000.00'
Δ = 2°54'19"	Δ = 7°10'00"
T = 49.26'	T = 125.24'
L = 98.50'	L = 250.16'

PLAN

1" = 20'

BENCHMARKS (From City)

BM #J7-M2 Elev: 871.063'
FD PK NAIL & CITY ENG TAG IN W'LY WALL OF CATCH BASIN, 1' N. ON N'LY CURB OF COLUMBIA AVE, 155' E'LY OF E. LA CADENA DR.

BM #J8-F2 Elev: 952.776'
FD CHS SQ AT SE TOP OF CATCH BASIN ON N'LY SIDE OF CENTER ST, E. OF TRANSIT AVE

REGISTERED PROFESSIONAL ENGINEER TODD W. DUDEK No. C-39514 Exp. 12/31/2015 CIVIL STATE OF CALIFORNIA

AS-BUILT 08/01/14

Don't Dig...Until You Call U.S.A. Toll Free 811 for the location of buried utility lines. Don't disrupt vital services. TWO WORKING DAYS BEFORE YOU DIG

PLANS PREPARED BY:
AECOM
901 VIA PIEMONTE
ONTARIO, CA 91764
(909) 579-3050

REGISTERED PROFESSIONAL ENGINEER ROBERT PRICE No. C56855 Exp. 6/30/13 CIVIL STATE OF CALIFORNIA

MARK	REVISIONS	APPR	DATE
AS-BUILT	REVISED AS NOTED	TD	8/01/14

DESIGN BY R.A.P. DRAWN BY S.D. CHECKED BY M.C./A.S.

IOWA AVENUE GRADE SEPARATION
RETAINING WALL NO. 6
GENERAL PLAN NO. 1

DWG NO. R-4237
S-108
SHEET 112 OF 133
SCALE: AS SHOWN

AS-BUILT

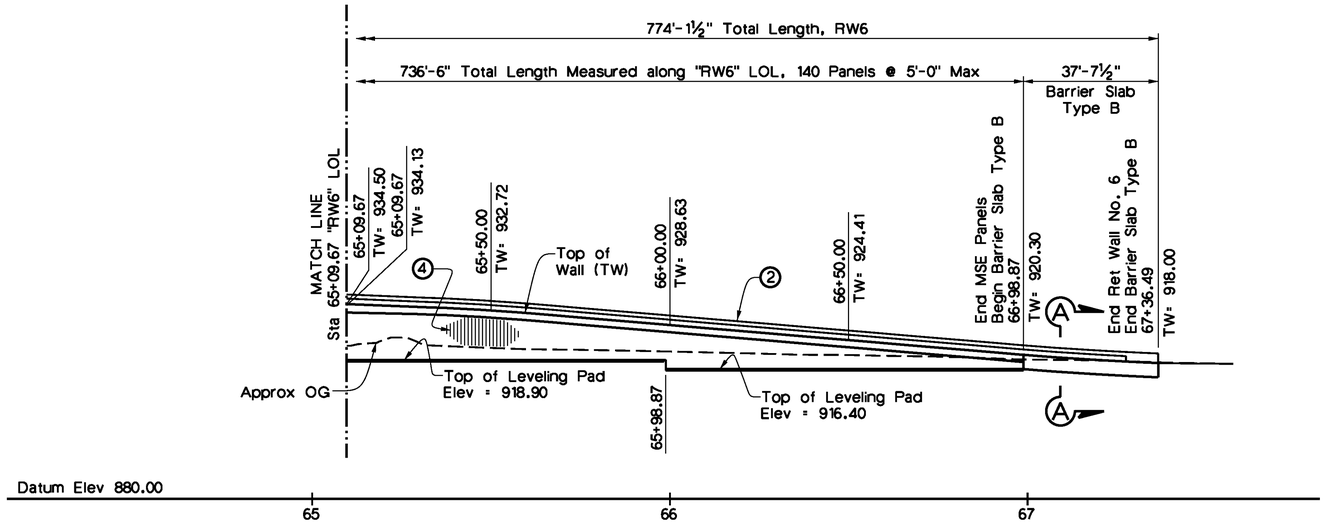

DEVELOPED MIRROR ELEVATION

1" = 20'

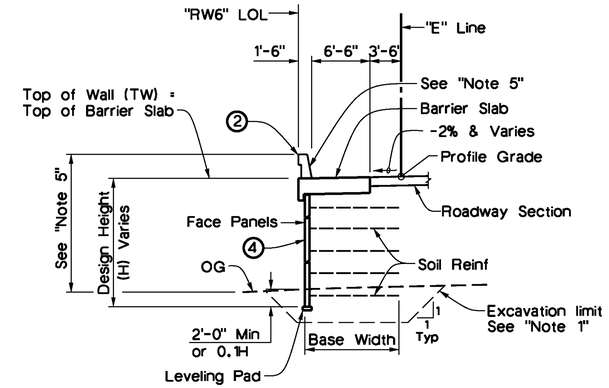

TYPICAL SECTION

⅛" = 1'-0"

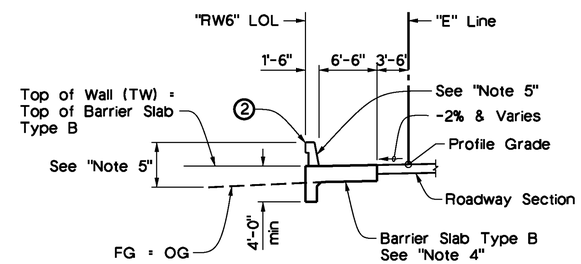

SECTION A-A

⅛" = 1'-0"

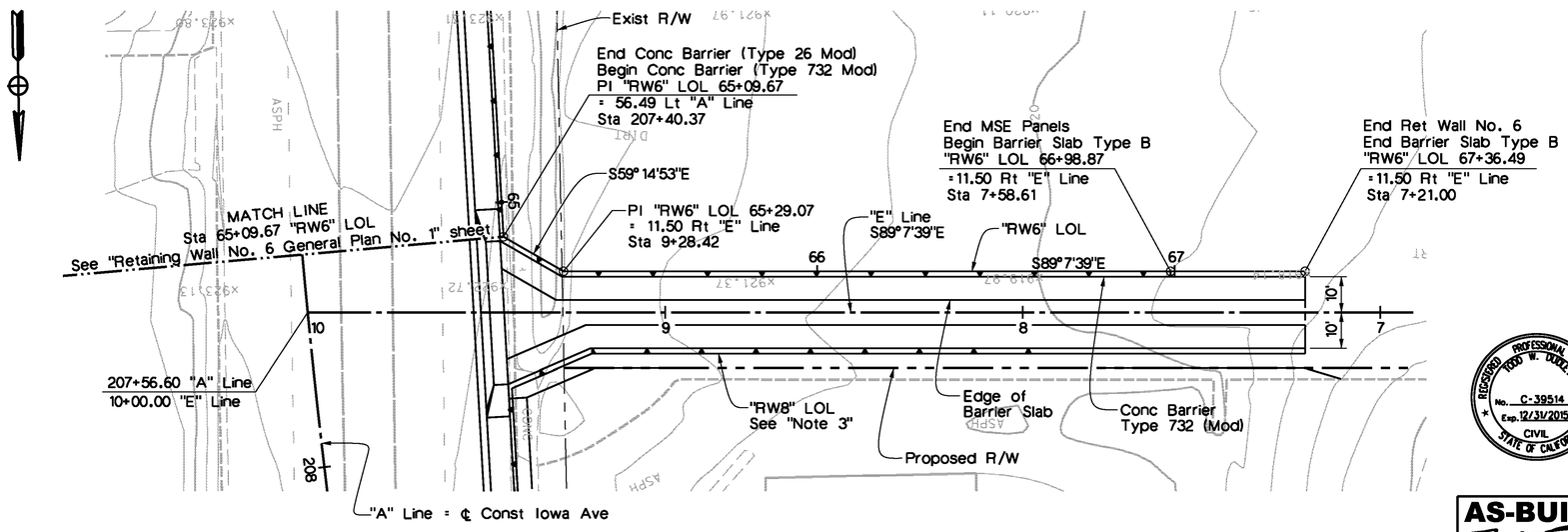

PLAN

1" = 20'

LEGEND

② Concrete Barrier, Type 732 (Mod)

④ Architectural Conc Texture, see "Note 2"

NOTES

1. For excavation dimensions, see "MSE Details No. 5" sheet.
2. For Fractured Rib Texture detail, see "Architectural Details" sheets.
3. For "RW8" details, see "Retaining Wall No. 8 General Plan" sheets.
4. For Barrier Slab Type B details, see "Mechanically Stabilized Embankment Detail No. 4" sheet.
5. Apply Anti-Graffiti Coating to textured face panels above FG, outside face of barrier slab and exterior & interior faces of concrete barrier or parapet.
6. For General Notes, see "MSE Details No. 1" sheet.

REGISTERED PROFESSIONAL ENGINEER
TODD W. DUDLEY
No. C-39514
Exp. 12/31/2015
CIVIL
STATE OF CALIFORNIA

AS-BUILT
08/01/14

Don't Dig...Until You Call U.S.A. Toll Free 811 for the location of buried utility lines. Don't disrupt vital services.
TWO WORKING DAYS BEFORE YOU DIG

PLANS PREPARED BY:
AECOM
901 VIA PIEMONTE
ONTARIO, CA 91764
(909) 579-3050

REGISTERED PROFESSIONAL ENGINEER
ROBERT PRICE
No. C56855
Exp. 6/30/13
CIVIL
STATE OF CALIFORNIA

MARK	REVISIONS	APPR	DATE
AS-BUILT	REVISED AS NOTED	TD	8/01/14

DESIGN BY R.A.P. DRAWN BY S.D. CHECKED BY M.C./A.S.

IOWA AVENUE
GRADE SEPARATION
RETAINING WALL NO. 6
GENERAL PLAN No. 2

DWG NO. R-4237
S-109
SHEET 113 OF 133
SCALE: AS SHOWN

AS-BUILT

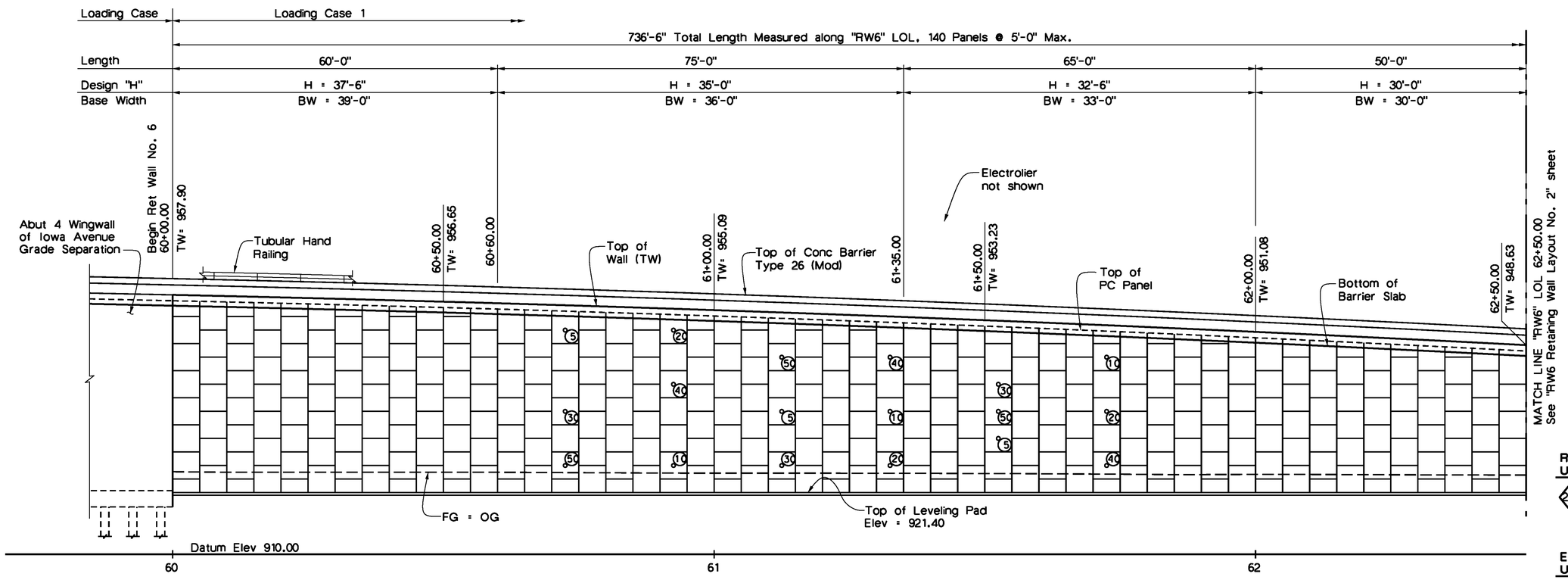

DEVELOPED MIRROR ELEVATION

1" = 10'

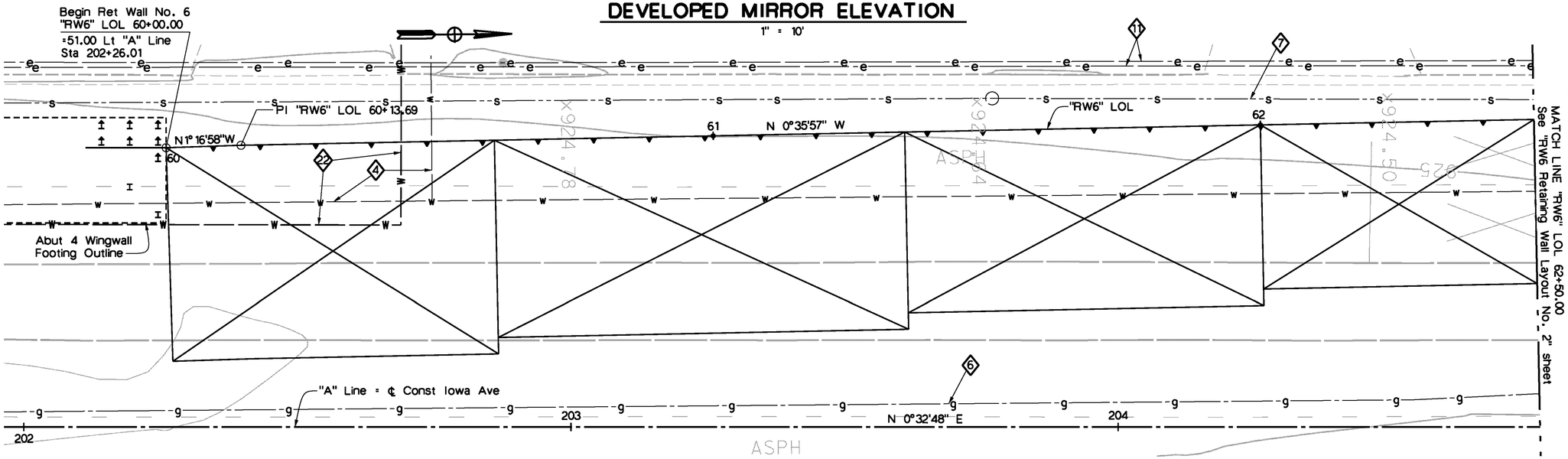

PLAN

1" = 10'

AS-BUILT
08/01/14

RELOCATED UTILITY LEGEND

22 2" Water service (to be relocated by others)

EXISTING UTILITY LEGEND

4 14"Ø STL City Water (abandoned)
6 12"Ø Gas SCG (abandoned)
7 8"Ø VCP City Sewer (abandoned)
11 UG City Electric (protect in place)

NOTES

1. For Typical Section, see "Retaining Wall No. 6 General Plan" sheet.
2. Utilities shown are approximate, see "Road Plans". Contractor shall verify utility locations and status prior to excavation.

LEGEND

Indicates Base Limits of Welded Wire Mat (Soil Reinforcement)

Indicates Location of Inspection Wire

(X) Indicates Interval in years from Construction to Removal of Inspection Wire.

Don't Dig...Until You Call U.S.A. Toll Free 811 for the location of buried utility lines. Don't disrupt vital services.
TWO WORKING DAYS BEFORE YOU DIG

PLANS PREPARED BY:
AECOM
901 VIA PIEMONTE
ONTARIO, CA 91764
(909) 579-3050

REGISTERED PROFESSIONAL ENGINEER ROBERT PRICE No. C56855 Exp. 6/30/13 CIVIL STATE OF CALIFORNIA

MARK	REVISIONS	APPR	DATE
AS-BUILT	REVISED AS NOTED	TD	8/01/14

DESIGN BY R.A.P DRAWN BY S.D. CHECKED BY M.C./A.S.

IOWA AVENUE
GRADE SEPARATION
RETAINING WALL NO. 6
LAYOUT NO. 1

DWG NO. R-4237
S-110
SHEET 114 OF 133
SCALE: AS SHOWN

AS-BUILT

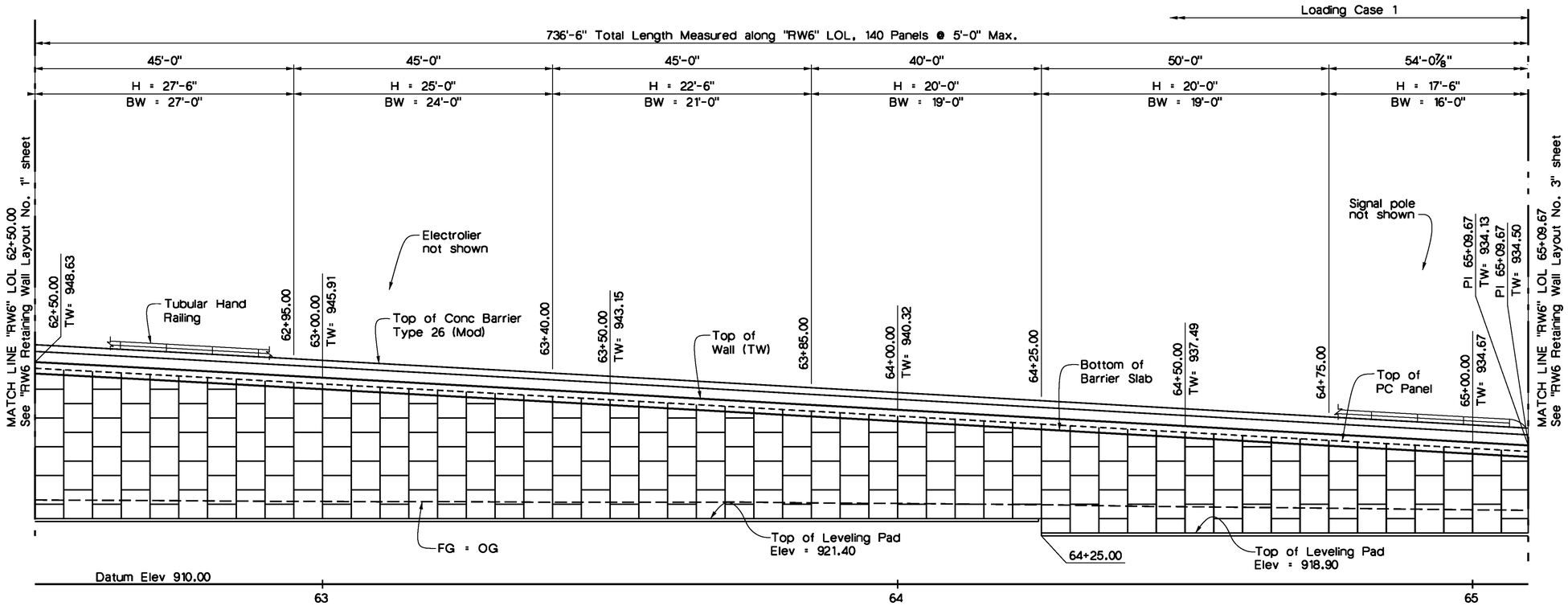

DEVELOPED MIRROR ELEVATION

1" = 10'

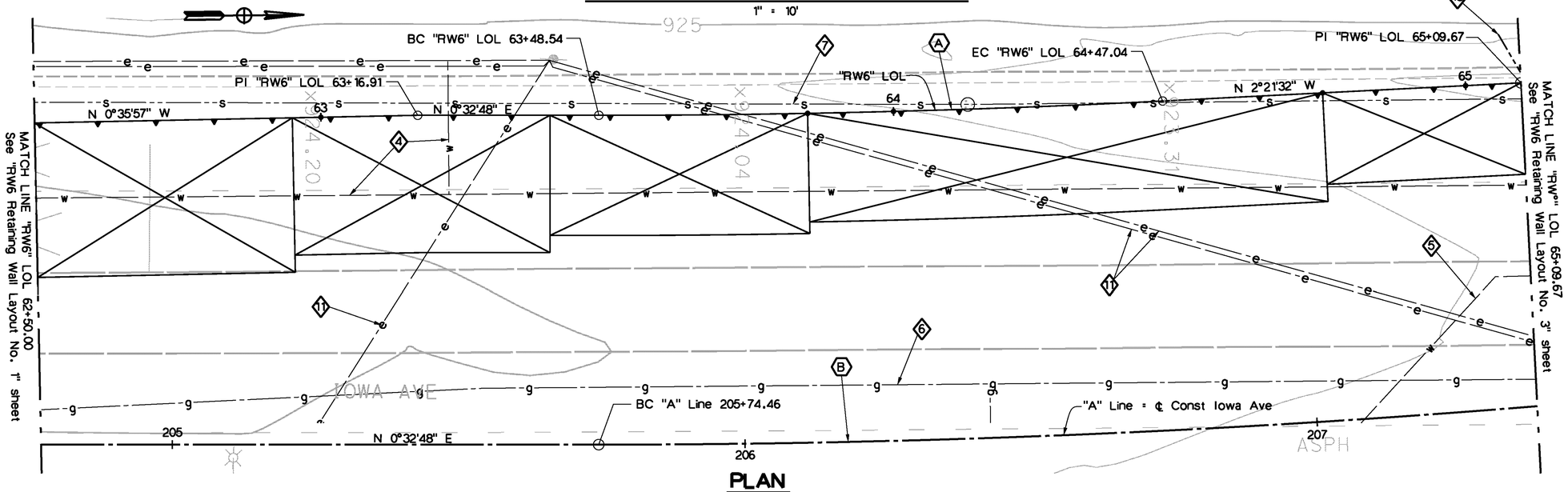

PLAN

1" = 10'

RELOCATED UTILITY LEGEND

18 8"Ø Sanitary Sewer (protect in place)

EXISTING UTILITY LEGEND

4 14"Ø STL City Water (abandoned)

5 12"Ø CIP Water (abandoned)

6 12"Ø Gas SCG (abandoned)

7 8"Ø VCP Sewer (abandoned)

11 City Electric (abandoned)

NOTES

1. For Typical Section, see "Retaining Wall No. 6 General Plan No. 1" sheet.
2. Utilities shown are approximate, see "Road Plans". Contractor shall verify utility locations and status prior to excavation.

LEGEND

Indicates Base Limits of Welded Wire Mat (Soil Reinforcement)

X Curve identification, see "General Plan" for data.

REGISTERED PROFESSIONAL ENGINEER TODD W. DUDLEY No. C-39514 Exp. 12/31/2015 CIVIL STATE OF CALIFORNIA

AS-BUILT 08/01/14

Don't Dig...Until You Call U.S.A. Toll Free 811 for the location of buried utility lines. Don't disrupt vital services. TWO WORKING DAYS BEFORE YOU DIG

PLANS PREPARED BY:
AECOM
901 VIA PIEMONTE
ONTARIO, CA 91764
(909) 579-3050

REGISTERED PROFESSIONAL ENGINEER ROBERT PRICE No. C56855 Exp. 6/30/13 CIVIL STATE OF CALIFORNIA

MARK	REVISIONS	APPR	DATE
AS-BUILT	REVISED AS NOTED	TD	8/01/14

DESIGN BY R.A.P. DRAWN BY S.D. CHECKED BY M.C./A.S.

IOWA AVENUE GRADE SEPARATION

RETAINING WALL NO. 6 LAYOUT NO. 2

DWG NO. R-4237

S-111

SHEET 115 OF 133

SCALE: AS SHOWN

AS-BUILT

RELOCATED UTILITY LEGEND

21 8"Ø DIP Sanitary Sewer (protect in place)

EXISTING UTILITY LEGEND

4 14"Ø STL City Water (abandoned)

5 12"Ø CIP Water (abandoned)

7 8"Ø VCP Sewer (abandoned)

NOTES

1. For Typical Section, see "Retaining Wall No. 6 General Plan No. 2" sheet.
2. Utilities shown are approximate, see "Road Plans". Contractor shall verify utility locations and status prior to excavation.

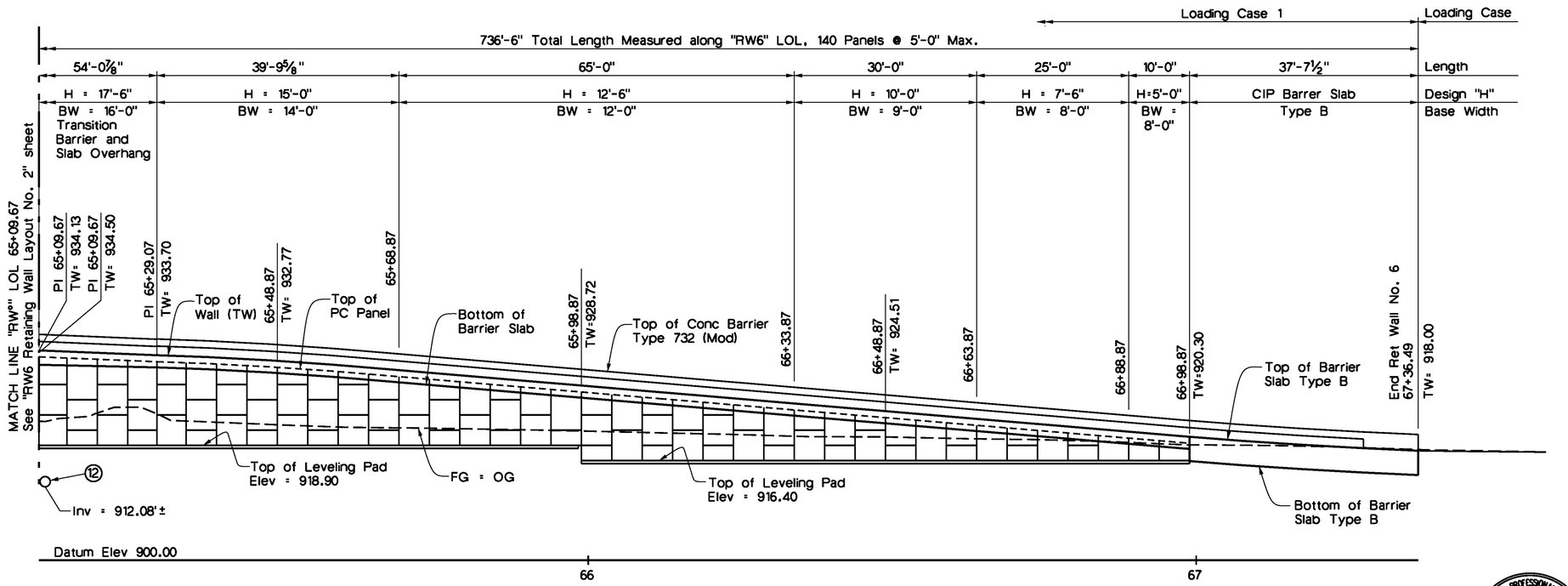

DEVELOPED MIRROR ELEVATION

1" = 10'

LEGEND

Indicates Base Limits of Welded Wire Mat (Soil Reinforcement)

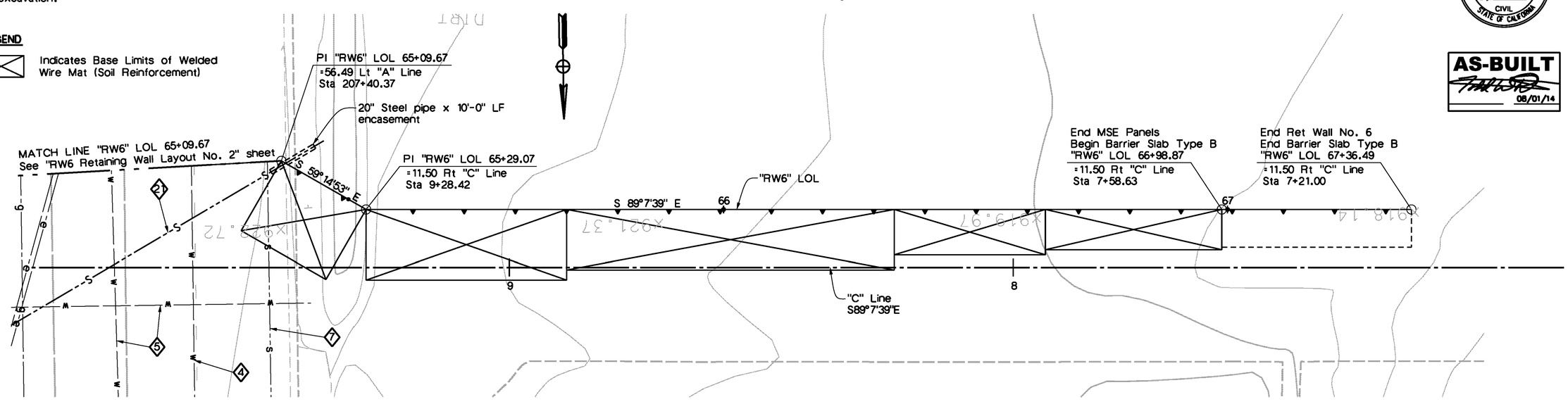

PLAN

1" = 10'

REGISTERED PROFESSIONAL ENGINEER TODD W. DUDLEY No. C-39514 Exp. 12/31/2015 CIVIL STATE OF CALIFORNIA

AS-BUILT 08/01/14

Don't Dig...Until You Call U.S.A. Toll Free 811 for the location of buried utility lines. Don't disrupt vital services. TWO WORKING DAYS BEFORE YOU DIG

PLANS PREPARED BY:
AECOM
901 VIA PIEMONTE
ONTARIO, CA 91764
(909) 579-3050

REGISTERED PROFESSIONAL ENGINEER ROBERT PRICE No. C56855 Exp. 6/30/13 CIVIL STATE OF CALIFORNIA

MARK	REVISIONS	APPR	DATE
AS-BUILT	REVISED AS NOTED	TD	8/01/14

DESIGN BY R.A.P. DRAWN BY S.D. CHECKED BY M.C./A.S.

IOWA AVENUE
GRADE SEPARATION
RETAINING WALL NO. 6
LAYOUT NO. 3

DWG NO. R-4237
S-112
SHEET 116 OF 133
SCALE: AS SHOWN

AS-BUILT

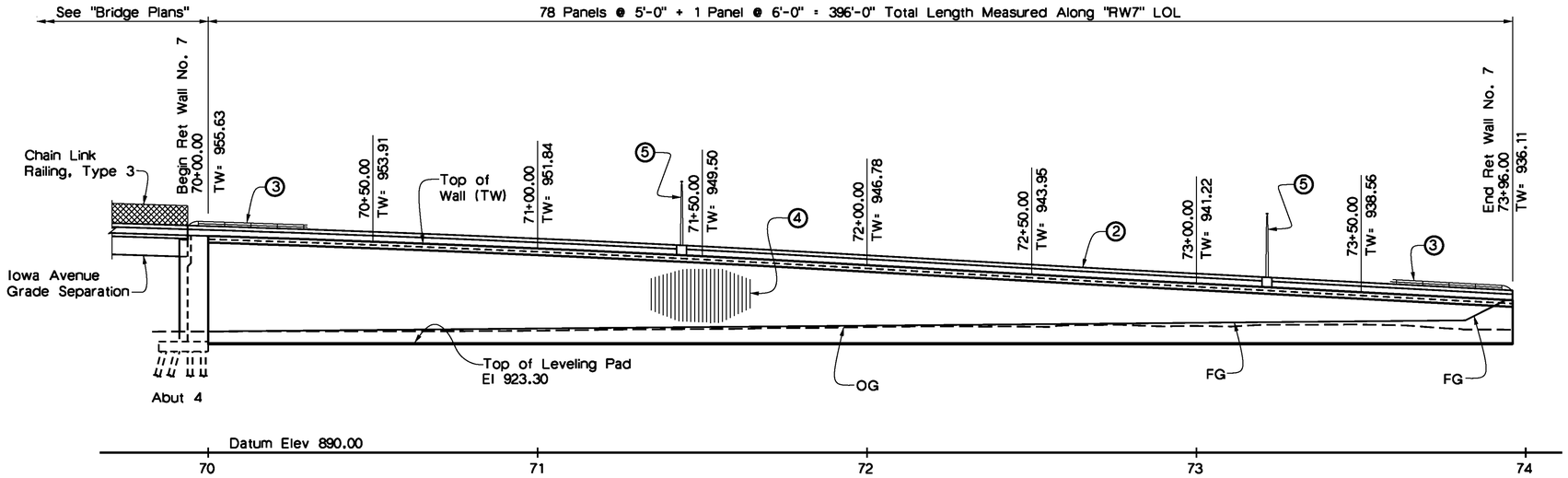

DEVELOPED ELEVATION

1" = 20'

QUANTITIES

MECHANICALLY STABILIZED EMBANKMENT, LOCATION G	8,571	SQFT
STRUCTURAL CONCRETE, BARRIER SLAB	215	CY
ANTI-GRAFFITI COATING	9,544	SQFT
TUBULAR HANDRAILING	381	LF
CONCRETE BARRIER (TYPE 26 MODIFIED)	381	LF

REGISTERED PROFESSIONAL ENGINEER TODD W. DUDLEY No. C-39514 Exp. 12/31/2015 CIVIL STATE OF CALIFORNIA

AS-BUILT 08/01/14

CITY OF RIVERSIDE

BENCHMARKS

BM #J7-M2 Elev: 871.063'
FD PK NAIL & CITY ENG TAG IN W'LY WALL OF CATCH BASIN, 1' N. ON N'LY CURB OF COLUMBIA AVE, 155' E'LY OF E. LA CADENA DR.

BM #J8-F2 Elev: 952.776'
FD CHS SQ AT SE TOP OF CATCH BASIN ON N'LY SIDE OF CENTER ST, E. OF TRANSIT AVE

LEGEND

1. Structure Approach Type N(30S)
2. Concrete Barrier, Type 26 (MOD)
3. Tubular Hand Railing
4. Architectural Conc Texture, see "Note 2"
5. Barrier Mounted Electrolier, see "Note 4"

⇦ Direction of traffic

CURVE DATA

(A)	(B)
R = 1858.67'	R = 2000.00'
Δ = 3°48'26"	Δ = 7°10'00"
T = 61.77'	T = 125.24'
L = 123.50'	L = 250.16'

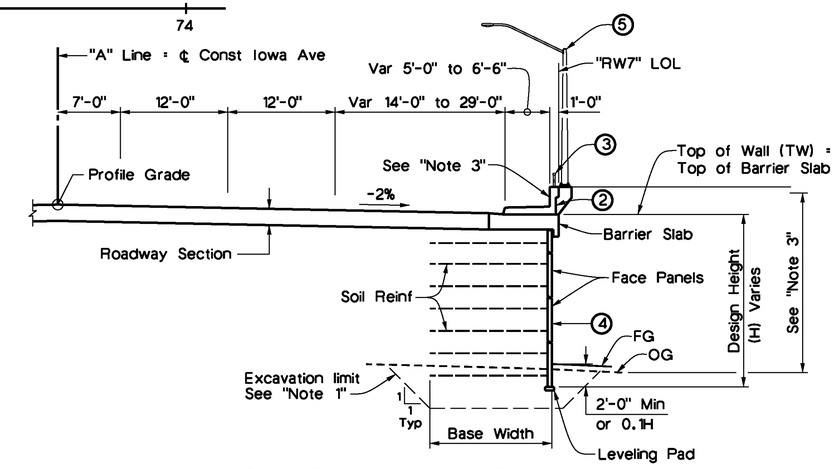

TYPICAL SECTION

⅛" = 1'-0"

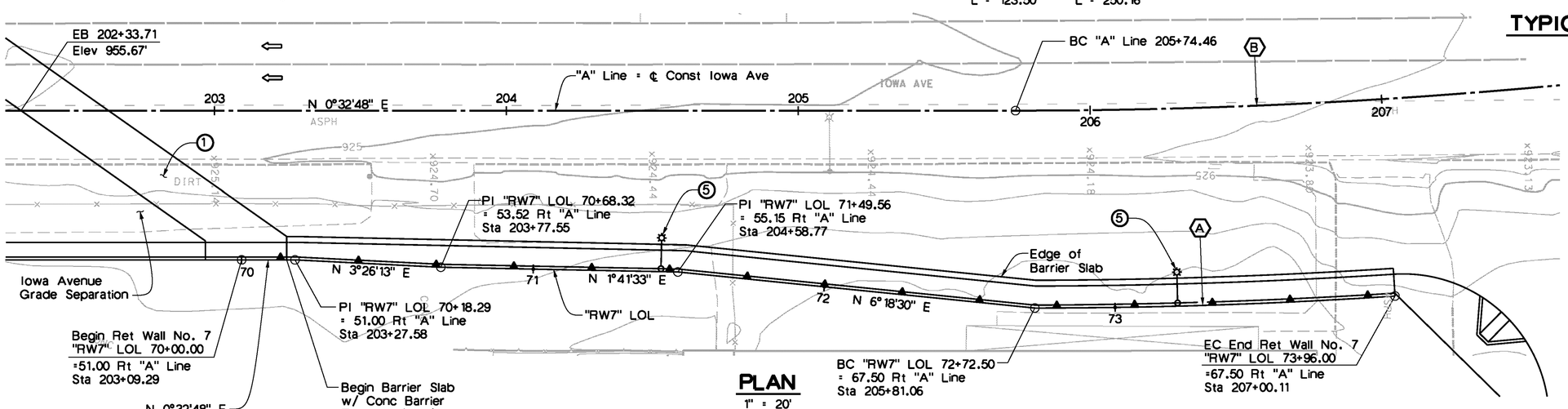

PLAN

1" = 20'

NOTES

1. For excavation dimensions, see "MSE Details No. 5" sheet.
2. For Texture Details, see "Architectural Details" sheets.
3. Apply Anti-Graffiti Coating to textured face panels above FG, outside face of barrier slab and exterior & interior faces of concrete barrier or parapet.
4. For barrier mounting details, see Bridge Plans "Typical Section" sheet. For all others, see "Street Lighting Plans".
5. For General Notes, see "MSE Details No. 1" sheet.

Don't Dig...Until You Call U.S.A. Toll Free 811 for the location of buried utility lines. Don't disrupt vital services.
TWO WORKING DAYS BEFORE YOU DIG

PLANS PREPARED BY:
AECOM
901 VIA PIEMONTE
ONTARIO, CA 91764
(909) 579-3050

REGISTERED PROFESSIONAL ENGINEER ROBERT PRICE No. C56855 Exp. 6/30/13 CIVIL STATE OF CALIFORNIA

MARK	REVISIONS	APPR	DATE
AS-BUILT	REVISED AS NOTED	TD	8/01/14

DESIGN BY R.A.P. DRAWN BY S.D. CHECKED BY M.C./A.S.

IOWA AVENUE GRADE SEPARATION

RETAINING WALL NO. 7 GENERAL PLAN

DWG NO. R-4237
S-113
SHEET 117 OF 133
SCALE: AS SHOWN

AS-BUILT

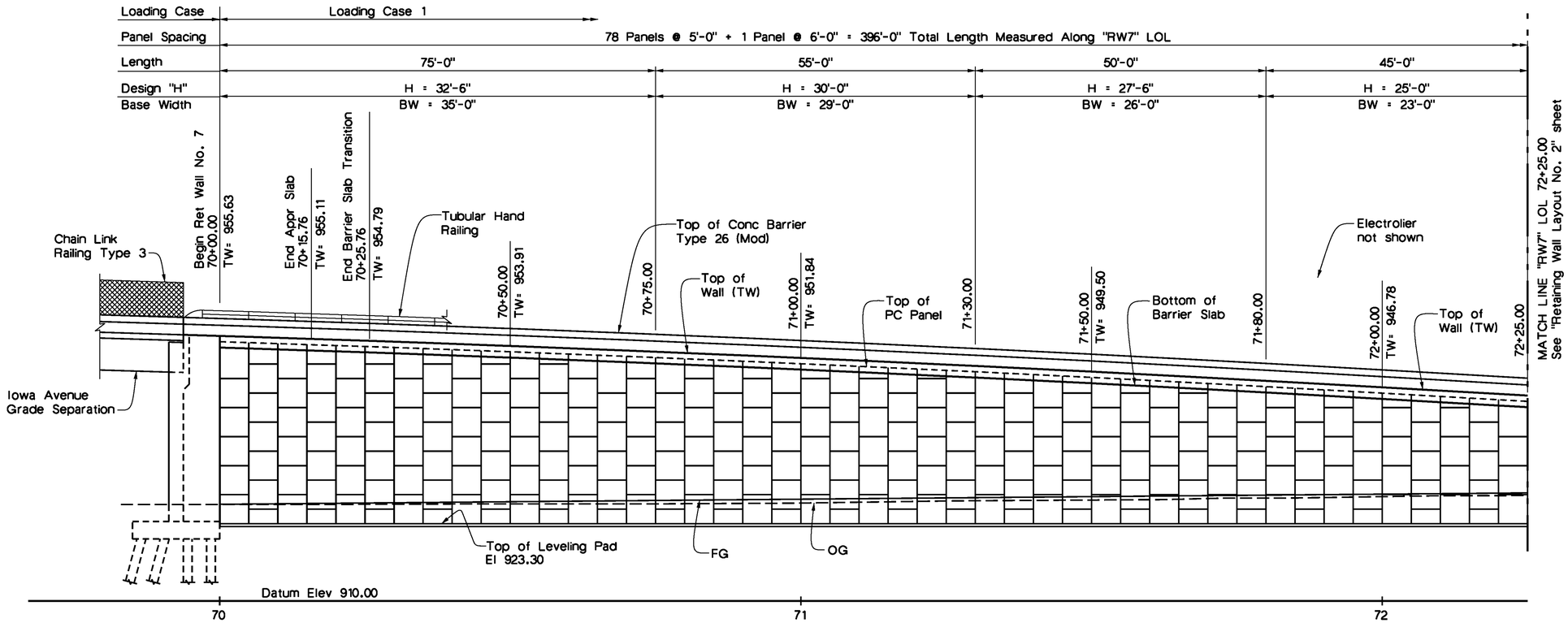

DEVELOPED ELEVATION

1" = 10'

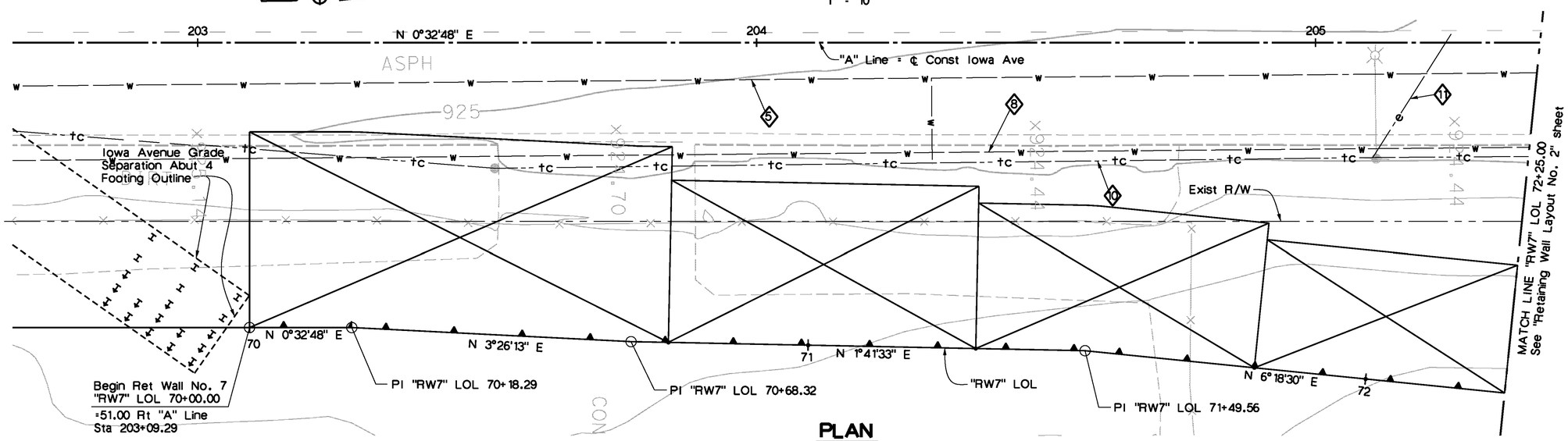

PLAN

1" = 10'

EXISTING UTILITY LEGEND

- (5) 12"Ø CIP Water (abandoned)
- (8) 8"Ø RCP Water (abandoned)
- (10) AT&T Fiber Optic (abandoned)
- (11) UG Electric (abandoned)

NOTES

1. For Typical Section, see "Retaining Wall No. 7 General Plan" sheet.
2. Utilities shown are approximate, see "Road Plans". Contractor shall verify utility locations and status prior to excavation.

LEGEND

Indicates Base Limits of Welded Wire Mat (Soil Reinforcement)

REGISTERED PROFESSIONAL ENGINEER TODD W. DUDLEY No. C-39514 Exp. 12/31/2015 CIVIL STATE OF CALIFORNIA

AS-BUILT 08/01/14

Don't Dig...Until You Call U.S.A. Toll Free 811 for the location of buried utility lines. Don't disrupt vital services. TWO WORKING DAYS BEFORE YOU DIG

PLANS PREPARED BY:
AECOM
901 VIA PIEMONTE
ONTARIO, CA 91764
(909) 579-3050

REGISTERED PROFESSIONAL ENGINEER ROBERT PRICE No. C56855 Exp. 6/30/13 CIVIL STATE OF CALIFORNIA

MARK	REVISIONS	APPR	DATE
AS-BUILT	REVISED AS NOTED	TD	8/01/14

DESIGN BY R.A.P. DRAWN BY S.D. CHECKED BY M.C./A.S.

IOWA AVENUE GRADE SEPARATION
RETAINING WALL NO. 7 LAYOUT NO. 1

DWG NO. R-4237
S-114
SHEET 118 OF 133
SCALE: AS SHOWN

AS-BUILT

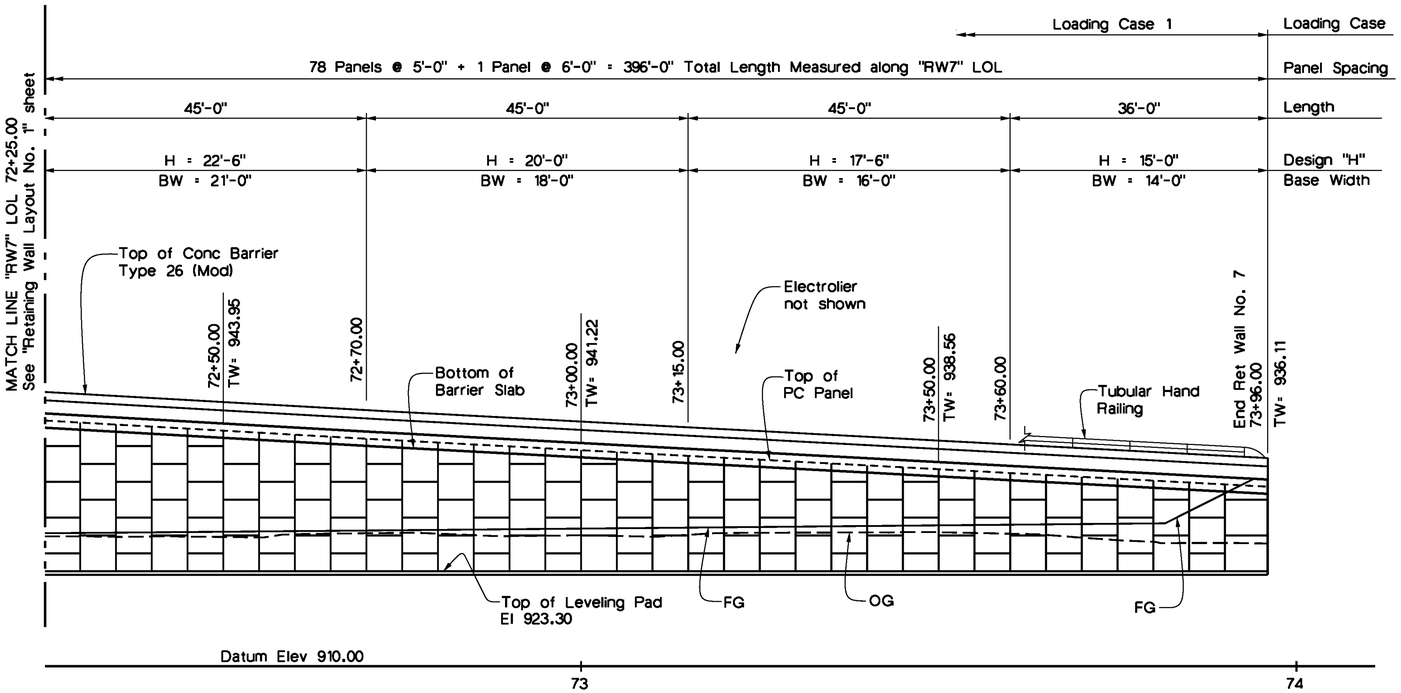

DEVELOPED ELEVATION

1" = 10'

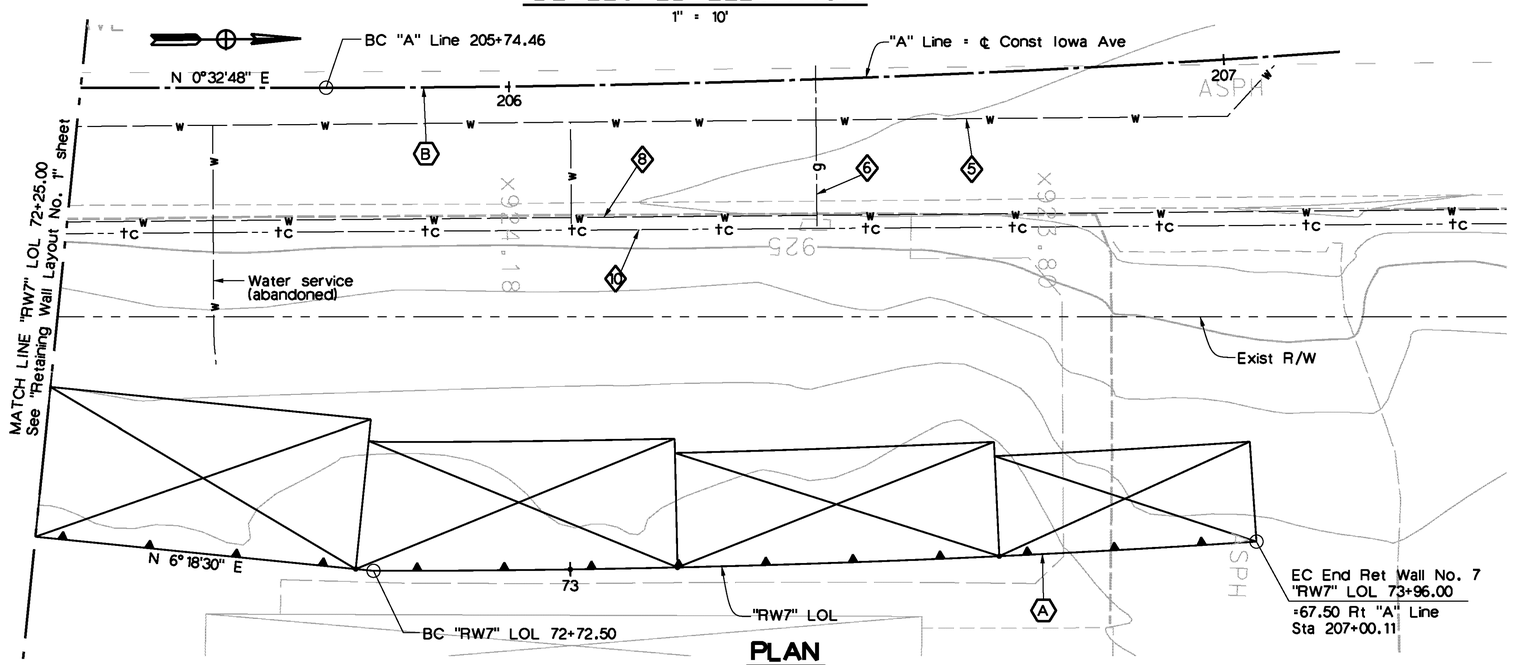

PLAN

1" = 10'

EXISTING UTILITY LEGEND

- 5 — 12"Ø CIP Water (abandoned)
- 6 — Gas Service, SCG (abandoned)
- 8 — 8"Ø RCP Water (abandoned)
- 10 — AT&T Fiber Optic (abandoned)

NOTES

1. For Typical Section, see "Retaining Wall No. 7 General Plan" sheet.
2. Utilities shown are approximate, see "Road Plans". Contractor shall verify utility locations and status prior to excavation.

LEGEND

- Indicates Base Limits of Welded Wire Mat (Soil Reinforcement)
- (X) Curve identification, see "General Plan" sheet for data.

REGISTERED PROFESSIONAL ENGINEER TODD W. DUDLEY No. C-39514 Exp. 12/31/2015 CIVIL STATE OF CALIFORNIA

AS-BUILT 08/01/14

Don't Dig...Until You Call U.S.A. Toll Free 811 for the location of buried utility lines. Don't disrupt vital services. TWO WORKING DAYS BEFORE YOU DIG

PLANS PREPARED BY:
AECOM
901 VIA PIEMONTE
ONTARIO, CA 91764
(909) 579-3050

REGISTERED PROFESSIONAL ENGINEER ROBERT PRICE No. C56855 Exp. 6/30/13 CIVIL STATE OF CALIFORNIA

MARK	REVISIONS	APPR	DATE
AS-BUILT	REVISED AS NOTED	TD	8/01/14

DESIGN BY R.A.P. DRAWN BY S.D. CHECKED BY M.C./A.S.

IOWA AVENUE
GRADE SEPARATION

RETAINING WALL NO. 7
LAYOUT NO. 2

DWG NO. R-4237
S-115
SHEET 119 OF 133
SCALE: AS SHOWN

AS-BUILT

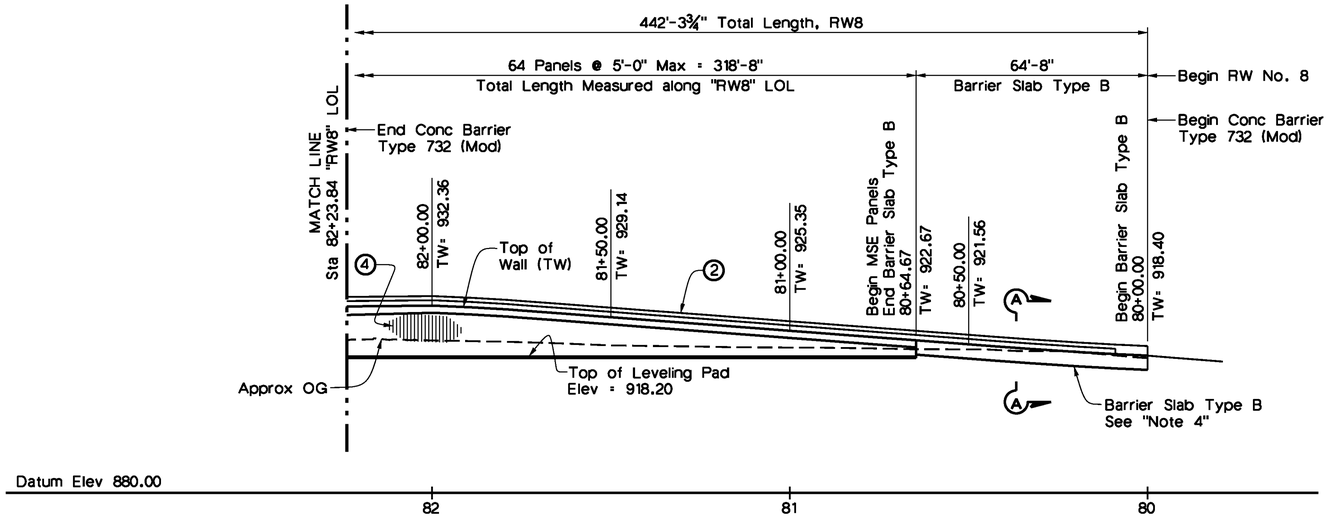

DEVELOPED ELEVATION

1" = 20'

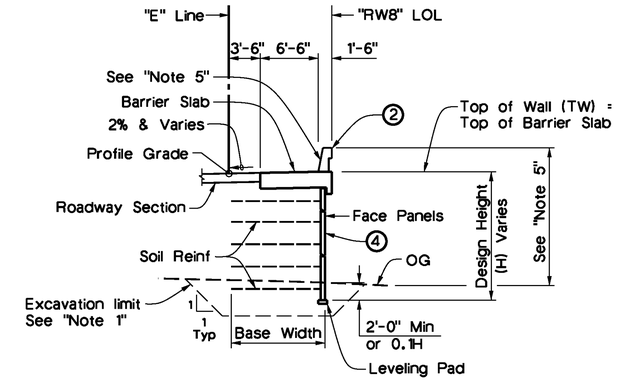

TYPICAL SECTION

⅛" = 1'-0"
(Looking Downstation)

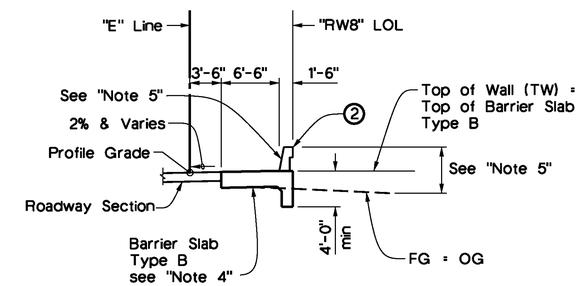

SECTION A-A

⅛" = 1'-0"
(Looking Downstation)

QUANTITIES

MECHANICALLY STABILIZED EMBANKMENT, LOCATION H	2,720	SQFT
STRUCTURAL CONCRETE, BARRIER SLAB	253	CY
ANTI-GRAFFITI COATING	6,389	SQFT
TUBULAR HANDRAILING	219	LF
CONCRETE BARRIER (TYPE 26 MODIFIED)	219	LF
CONCRETE BARRIER (TYPE 732 MODIFIED)	224	LF

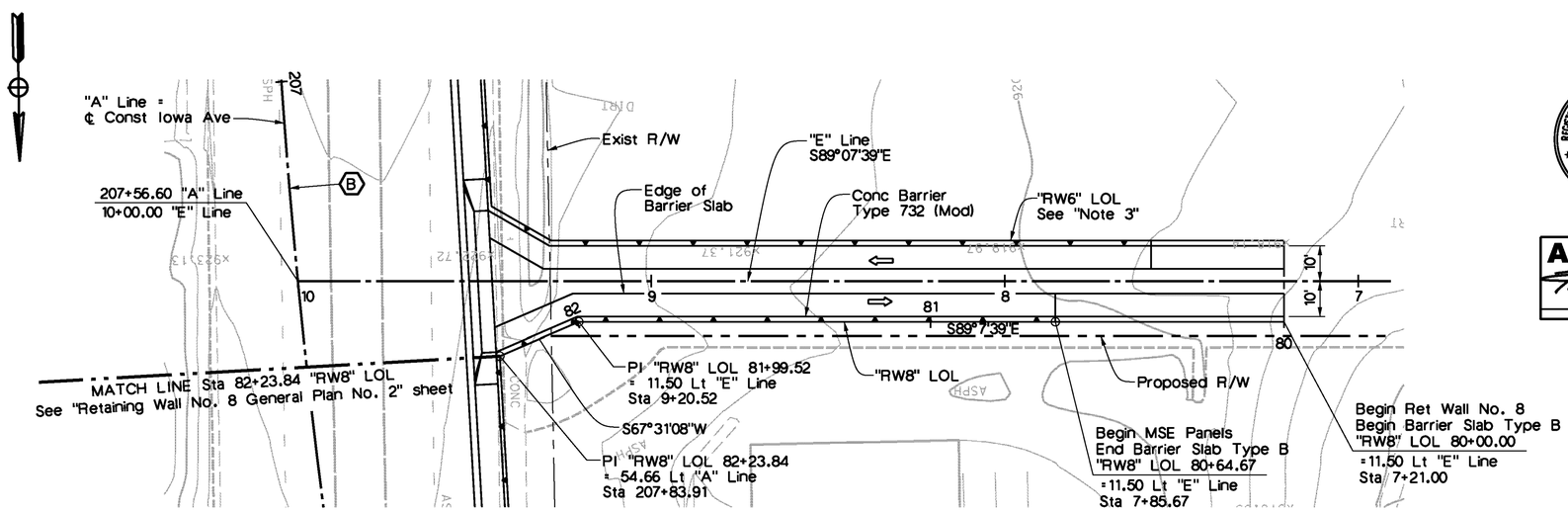

PLAN

1" = 20'

REGISTERED PROFESSIONAL ENGINEER
TODD W. DUDLEY
No. C-39514
Exp. 12/31/2015
CIVIL
STATE OF CALIFORNIA

AS-BUILT
08/01/14

LEGEND

- ② Concrete Barrier, Type 732 (Mod)
- ④ Architectural Conc Texture, see "Note 2"
- ⇦ Direction of traffic

NOTES

1. For excavation dimension, see "MSE Details No. 5" sheet.
2. For Fractured Rib Texture Detail, "Architectural Details" sheet.
3. For "RW6" details, see "Retaining Wall No. 6 General Plan" sheets.
4. For Barrier Slab Type B details, see "Mechanically Stabilized Embankment Detail No. 4" sheet.
5. Apply Anti-Graffiti Coating to textured face panels above FG, outside face of barrier slab and exterior & interior faces of concrete barrier or parapet.
6. For "General Notes", see "MSE Details No. 1" sheet.

CITY OF RIVERSIDE BENCHMARKS

BM #J7-M2 Elev: 871.063'
FD PK NAIL & CITY ENG TAG IN W'LY WALL OF CATCH BASIN, 1' N. ON N'LY CURB OF COLUMBIA AVE, 155' E'LY OF E. LA CADENA DR.

BM #J8-F2 Elev: 952.776'
FD CHS SQ AT SE TOP OF CATCH BASIN ON N'LY SIDE OF CENTER ST, E. OF TRANSIT AVE

CURVE DATA

(B)

R = 2000.00'
Δ = 7°10'00"
T = 125.24'
L = 250.16'

Don't Dig...Until You Call U.S.A. Toll Free 811 for the location of buried utility lines. Don't disrupt vital services.
TWO WORKING DAYS BEFORE YOU DIG

PLANS PREPARED BY:
AECOM
901 VIA PIEMONTE
ONTARIO, CA 91764
(909) 579-3050

REGISTERED PROFESSIONAL ENGINEER
ROBERT PRICE
No. C56855
Exp. 6/30/13
CIVIL
STATE OF CALIFORNIA

MARK	REVISIONS	APPR	DATE
AS-BUILT	REVISED AS NOTED	TD	8/01/14

DESIGN BY R.A.P. DRAWN BY S.D. CHECKED BY M.C./A.S.

IOWA AVENUE
GRADE SEPARATION

RETAINING WALL NO. 8
GENERAL PLAN NO. 1

DWG NO. R-4237
S-116
SHEET 120 OF 133
SCALE: AS SHOWN

AS-BUILT

REGISTERED PROFESSIONAL ENGINEER TODD W. DUDLEY No. C-39514 Exp. 12/31/2015 CIVIL STATE OF CALIFORNIA

AS-BUILT
08/01/14

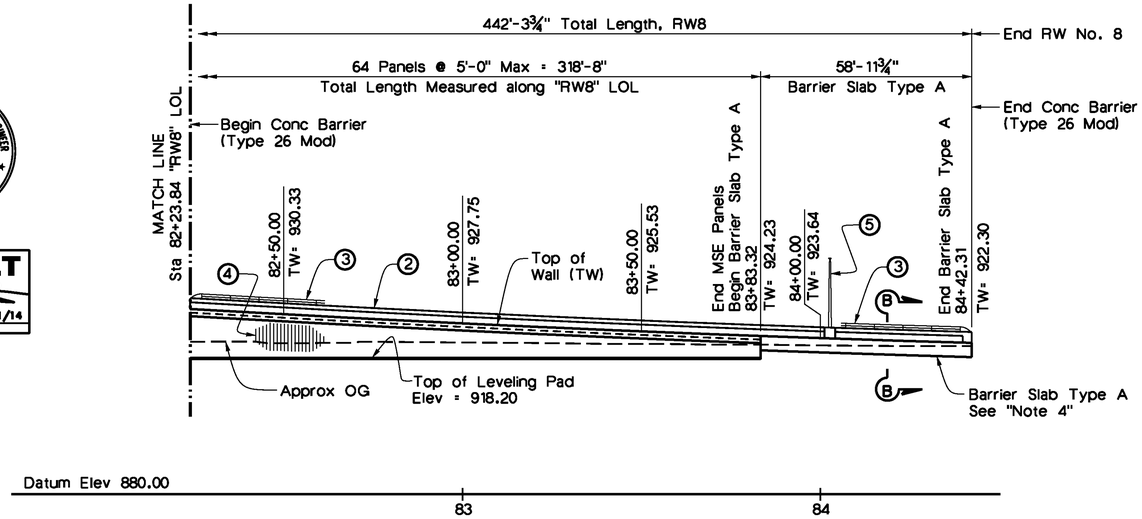

DEVELOPED MIRROR ELEVATION

1" = 20'

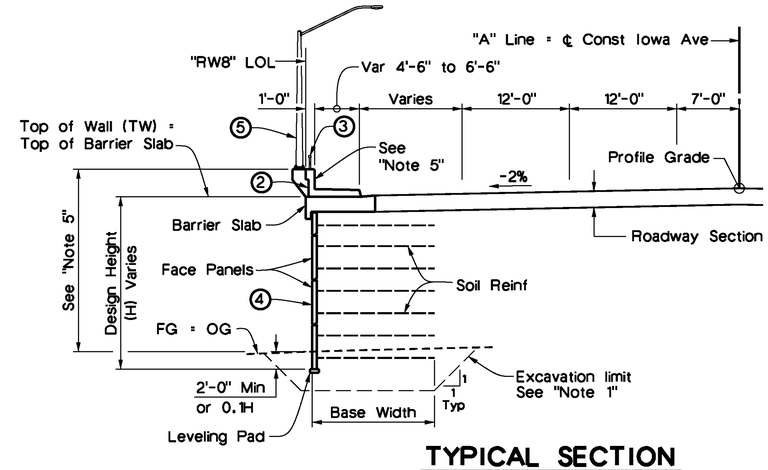

TYPICAL SECTION

⅛" = 1'-0"

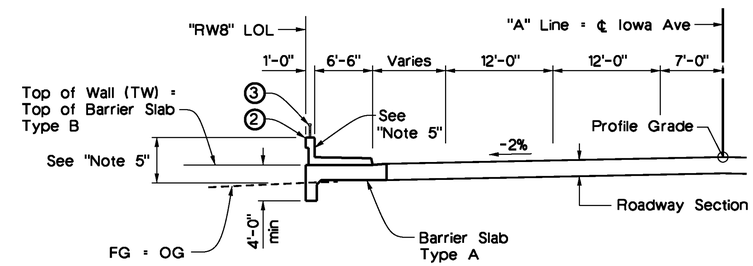

SECTION B-B

⅛" = 1'-0"

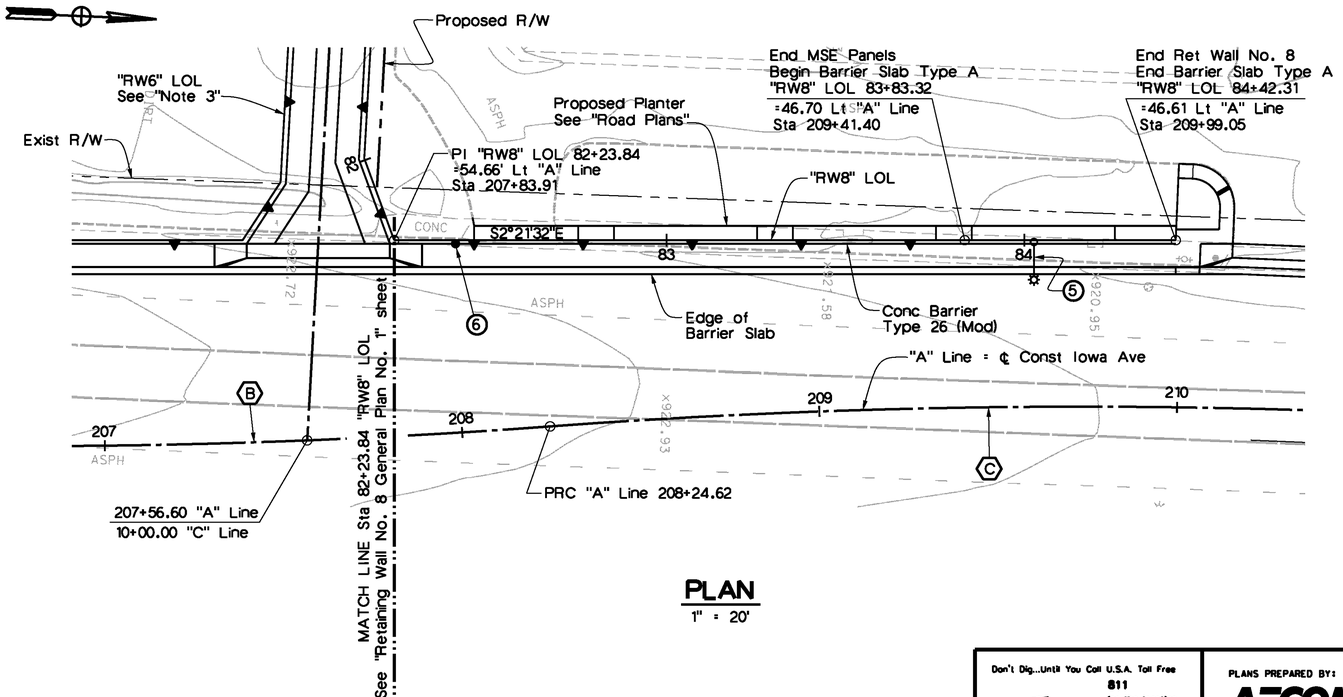

PLAN

1" = 20'

LEGEND

2. Concrete Barrier, Type 26 (Mod)
3. Tubular Hand Railing
4. Architectural Conc Texture, see "Note 2"
5. Barrier Mounted Electrolier, see "Note 7"
6. Traffic Signal Pole, See "Road Plans" & "Note 6"

CURVE DATA

B	C
R = 2000.00'	R = 2000.00'
Δ = 7° 10'00"	Δ = 6° 40'22"
T = 125.24'	T = 116.59'
L = 250.16'	L = 232.93'

NOTES

1. For excavation dimensions, see "MSE Details No. 5" sheet.
2. For Fractured Rib Texture Detail, see "Architectural Details" sheets.
3. For "RW6" details, see "Retaining Wall No. 6 General Plan" sheets.
4. For Barrier Slab Type A details, see "Mechanically Stabilized Embankment Detail No. 4" sheet.
5. Apply Anti-Graffiti Coating to textured face panels above FG, outside face of barrier slab and exterior & interior faces of concrete barrier or parapet.
6. For traffic signal pole anchorage and barrier slab details, see "MSE Details No. 3" sheet.
7. For barrier mounting details, see Bridge Plans "Typical Section" sheet. For all others, see "Street Lighting Plans".
8. For General Notes, see "MSE Details No. 1" sheet.

Don't Dig...Until You Call U.S.A. Toll Free 811 for the location of buried utility lines. Don't disrupt vital services.
TWO WORKING DAYS BEFORE YOU DIG

PLANS PREPARED BY:
AECOM
901 VIA PIEMONTE
ONTARIO, CA 91764
(909) 579-3050

REGISTERED PROFESSIONAL ENGINEER ROBERT PRICE No. C56855 Exp. 6/30/13 CIVIL STATE OF CALIFORNIA

MARK	REVISIONS	APPR	DATE
AS-BUILT	REVISED AS NOTED	TD	8/01/14

DESIGN BY R.A.P. DRAWN BY S.D. CHECKED BY M.C./A.S.

IOWA AVENUE
GRADE SEPARATION

RETAINING WALL NO. 8
GENERAL PLAN NO. 2

DWG NO. R-4237
S-117
SHEET 121 OF 133
SCALE: AS SHOWN

AS-BUILT

NOTES

1. For Typical Section, see "Retaining Wall No. 8 General Plan No. 1" sheet.
2. Utilities shown are approximate, see "Road Plans". Contractor shall verify utility locations and status prior to excavation.

LEGEND

Indicates Base Limits of Welded Wire Mat (Soil Reinforcement)

EXISTING UTILITY LEGEND

5 12"Ø CIP Water (abandoned)

7 8"Ø VCP Sewer (abandoned)

RELOCATED UTILITY LEGEND

21 8"Ø Sanitary Sewer (protect in place)

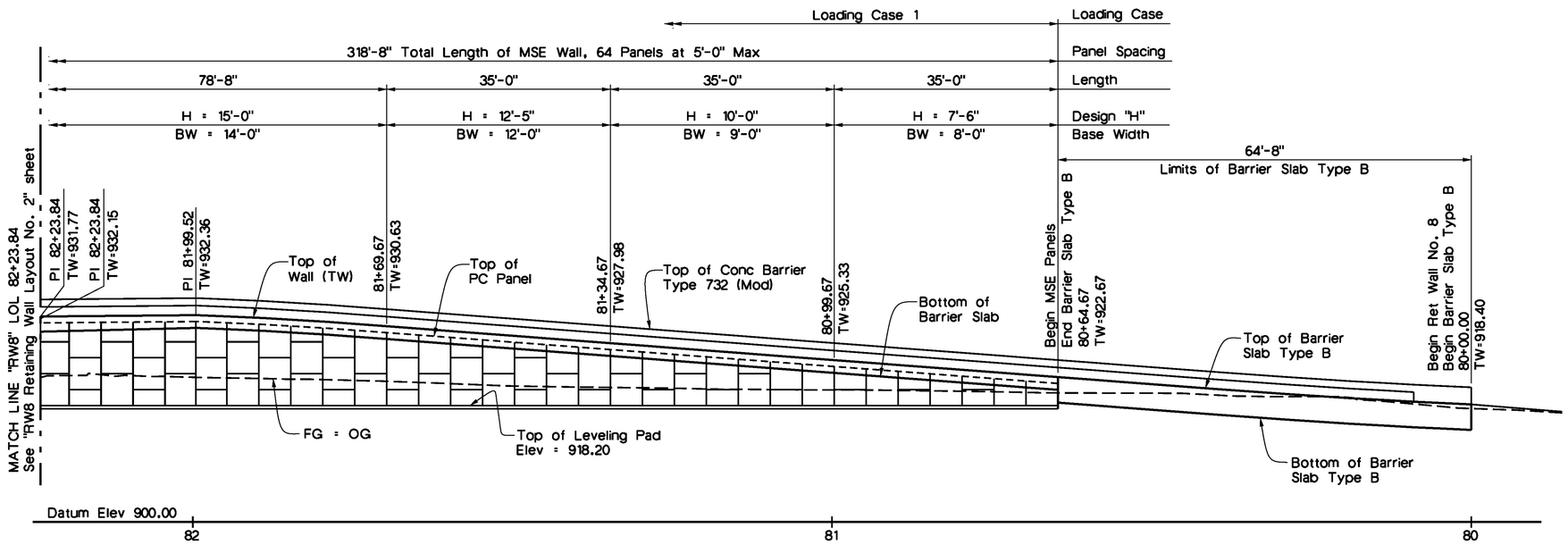

DEVELOPED ELEVATION

1" = 10'

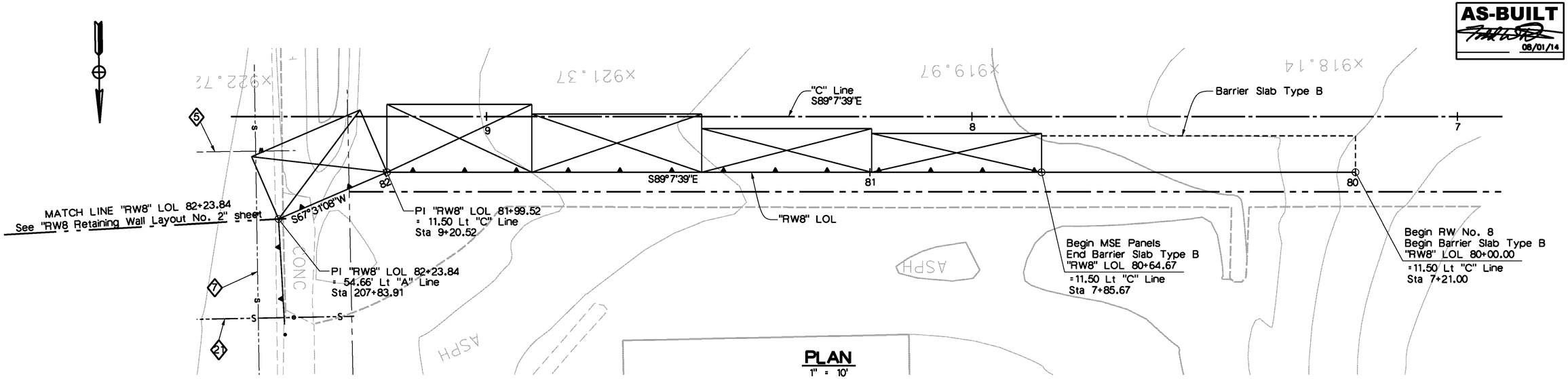

PLAN

1" = 10'

AS-BUILT
08/01/14

Don't Dig...Until You Call U.S.A. Toll Free 811 for the location of buried utility lines. Don't disrupt vital services. TWO WORKING DAYS BEFORE YOU DIG

PLANS PREPARED BY:
AECOM
901 VIA PIEMONTE
ONTARIO, CA 91764
(909) 579-3050

REGISTERED PROFESSIONAL ENGINEER ROBERT PRICE No. C56855 Exp. 6/30/13 CIVIL STATE OF CALIFORNIA

MARK	REVISIONS	APPR	DATE
AS-BUILT	REVISED AS NOTED	TD	8/01/14

DESIGN BY R.A.P. DRAWN BY S.D. CHECKED BY M.C./A.S.

IOWA AVENUE
GRADE SEPARATION

RETAINING WALL NO. 8
LAYOUT NO. 1

DWG NO. R-4237
S-118
SHEET 122 OF 133

SCALE: AS SHOWN

REGISTERED PROFESSIONAL ENGINEER TODD W. DUDLEY No. C-39514 Exp. 12/31/2015 CIVIL STATE OF CALIFORNIA

AS-BUILT

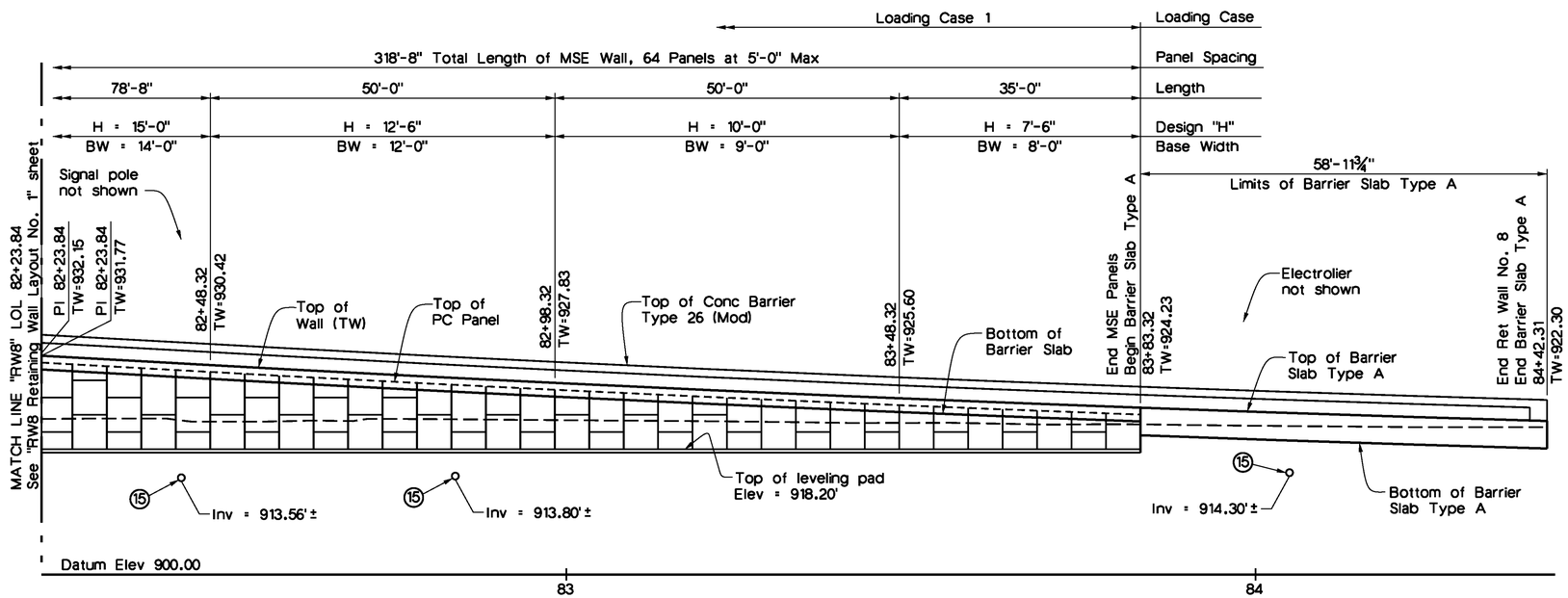

DEVELOPED MIRROR ELEVATION

1" = 10'

NOTES

1. For Typical Section, see "Retaining Wall No. 8 General Plan No. 2" sheet.
2. For Barrier Slab Type A details, see "Mechanically Stabilized Embankment Detail No. 4" sheet.
3. Utilities shown are approximate, see "Road Plans". Contractor shall verify utility locations and status prior to excavation.

LEGEND

Indicates Base Limits of Welded Wire Mat (Soil Reinforcement)

Curve identification, see "General Plan" sheets for data

REGISTERED PROFESSIONAL ENGINEER TODD M. DUDLEY No. C-39514 Exp. 12/31/2015 CIVIL STATE OF CALIFORNIA

AS-BUILT
08/01/14

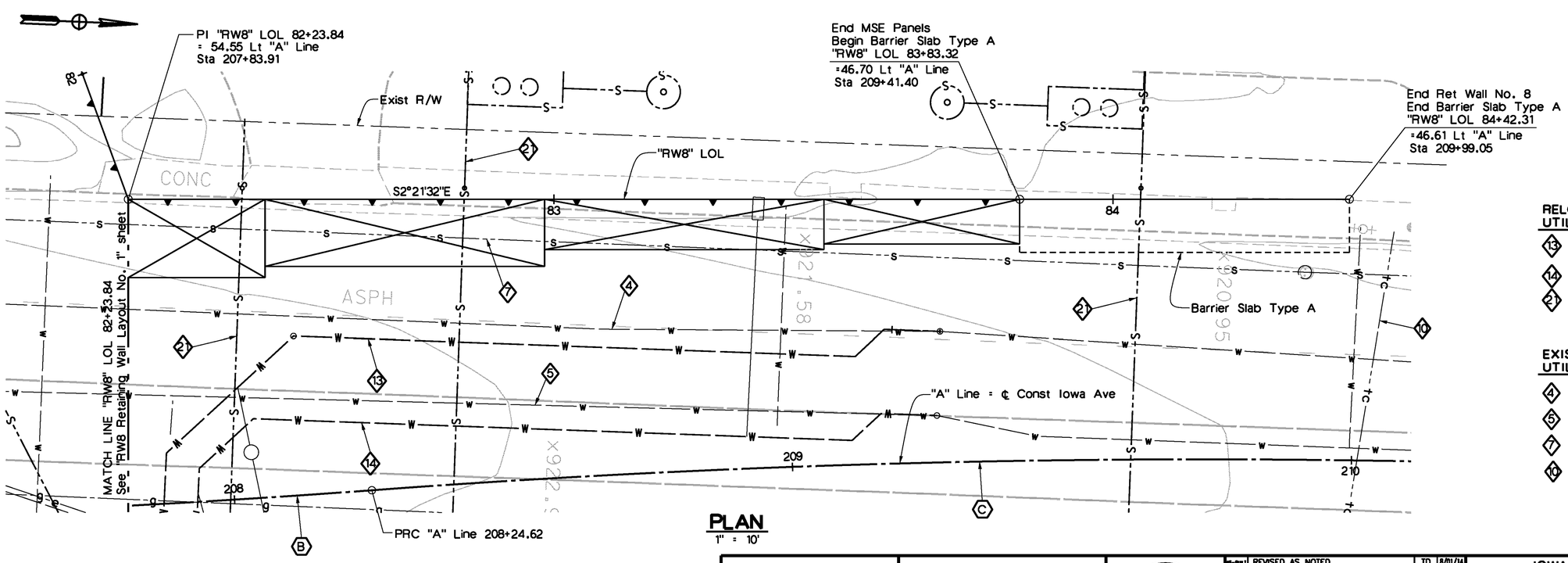

PLAN

1" = 10'

RELOCATED UTILITY LEGEND

- 13 16"Ø CML&C Steel Pipe Water (protect in place)
- 14 12"Ø DIP Water (protect in place)
- 21 8"Ø Sanitary Sewer (protect in place)

EXISTING UTILITY LEGEND

- 4 14"Ø Steel Water (abandoned)
- 5 12"Ø CIP Water (abandoned)
- 7 8"Ø VCP Sewer (abandoned)
- 10 UG AT&T (protect in place)

Don't Dig...Until You Call U.S.A. Toll Free 811 for the location of buried utility lines. Don't disrupt vital services. TWO WORKING DAYS BEFORE YOU DIG

PLANS PREPARED BY:
AECOM
901 VIA PIEMONTE
ONTARIO, CA 91764
(909) 579-3050

REGISTERED PROFESSIONAL ENGINEER ROBERT PRICE No. C56855 Exp. 6/30/13 CIVIL STATE OF CALIFORNIA

MARK	REVISIONS	APPR	DATE
AS-BUILT	REVISED AS NOTED	TD	8/01/14

DESIGN BY R.A.P. DRAWN BY S.D. CHECKED BY M.C./A.S.

IOWA AVENUE
GRADE SEPARATION

RETAINING WALL NO. 8
LAYOUT NO. 2

DWG NO. R-4237
S-119
SHEET 123 OF 133
SCALE: AS SHOWN

AS-BUILT

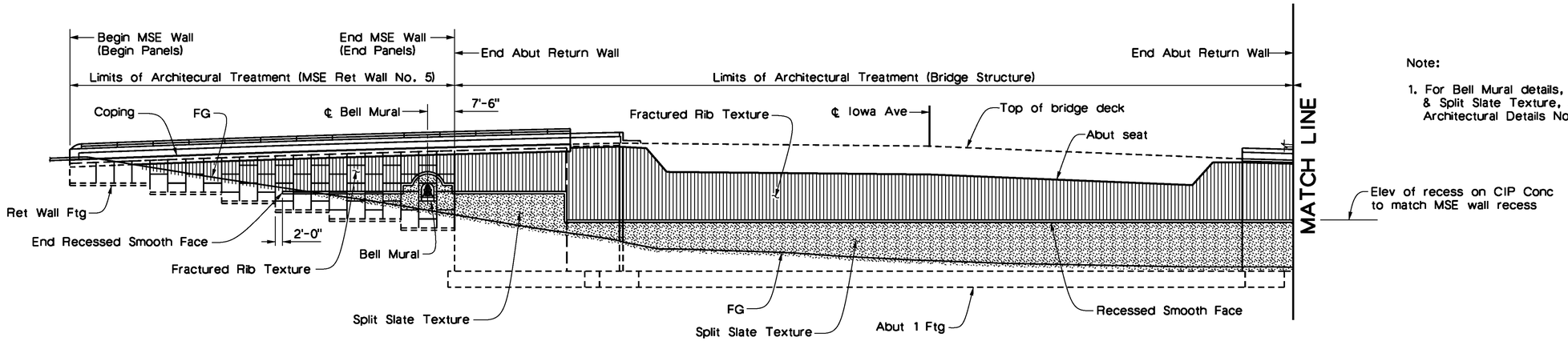

Note:

1. For Bell Mural details, Fractured Rib Texture & Split Slate Texture, see "Retaining Wall Architectural Details No. 3" sheet.

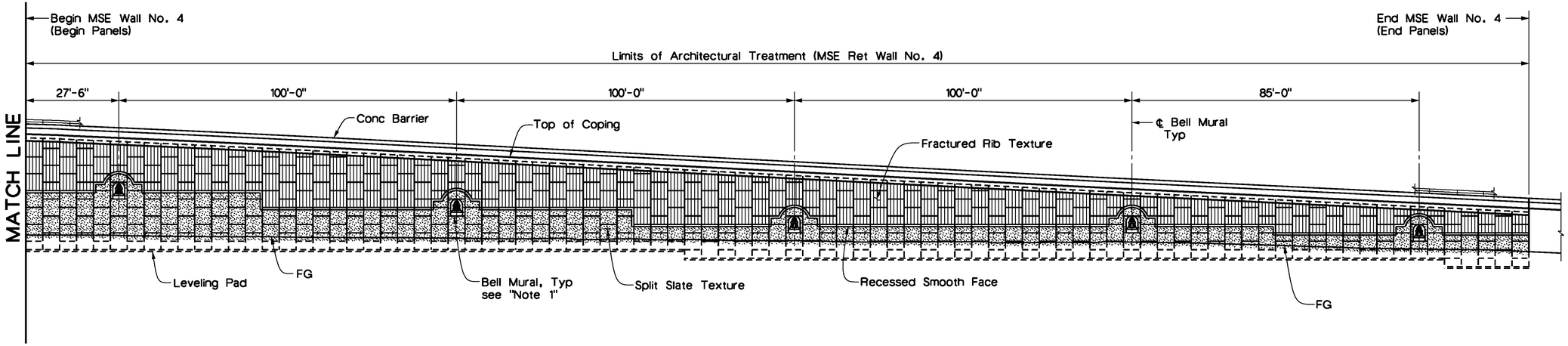

ARCHITECTURAL TREATMENT

1/16" = 1'-0"

REGISTERED PROFESSIONAL ENGINEER TODD W. DOUGLAS No. C-39514 Exp. 12/31/2015 CIVIL STATE OF CALIFORNIA

AS-BUILT
08/01/14

Don't Dig...Until You Call U.S.A. Toll Free 811 for the location of buried utility lines. Don't disrupt vital services.
TWO WORKING DAYS BEFORE YOU DIG

PLANS PREPARED BY:
AECOM
901 VIA PIEMONTE
ONTARIO, CA 91764
(909) 579-3050

REGISTERED PROFESSIONAL ENGINEER ROBERT PRICE No. C56855 Exp. 6/30/13 CIVIL STATE OF CALIFORNIA

MARK	REVISIONS	APPR	DATE
AS-BUILT	REVISED AS NOTED	TD	8/01/14

DESIGN BY R.A.P. DRAWN BY S.D. CHECKED BY M.C./A.S.

IOWA AVENUE
GRADE SEPARATION
RETAINING WALL
ARCHITECTURAL DETAILS NO. 1

DWG NO. R-4237
S-120
SHEET 124 OF 133
SCALE: AS SHOWN

AS-BUILT

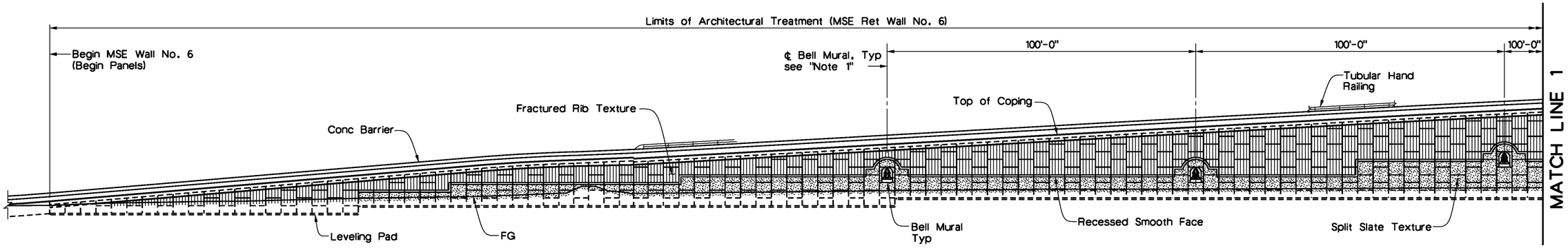

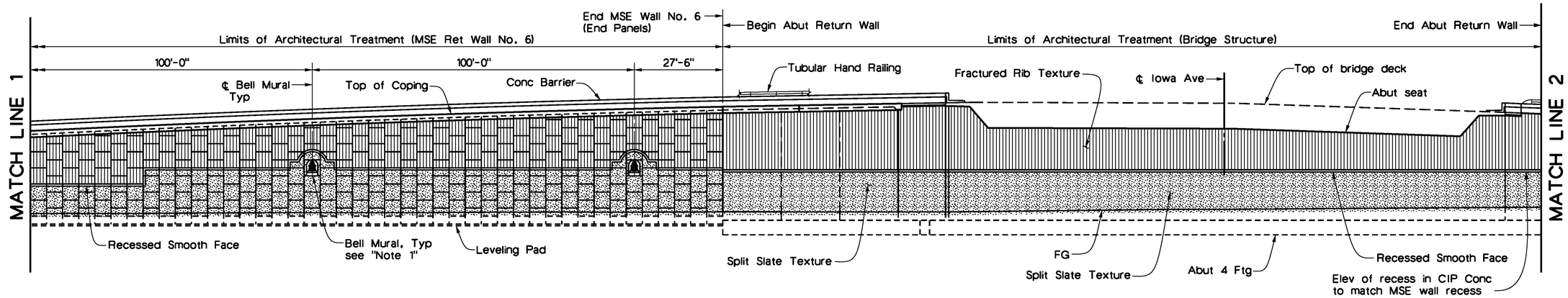

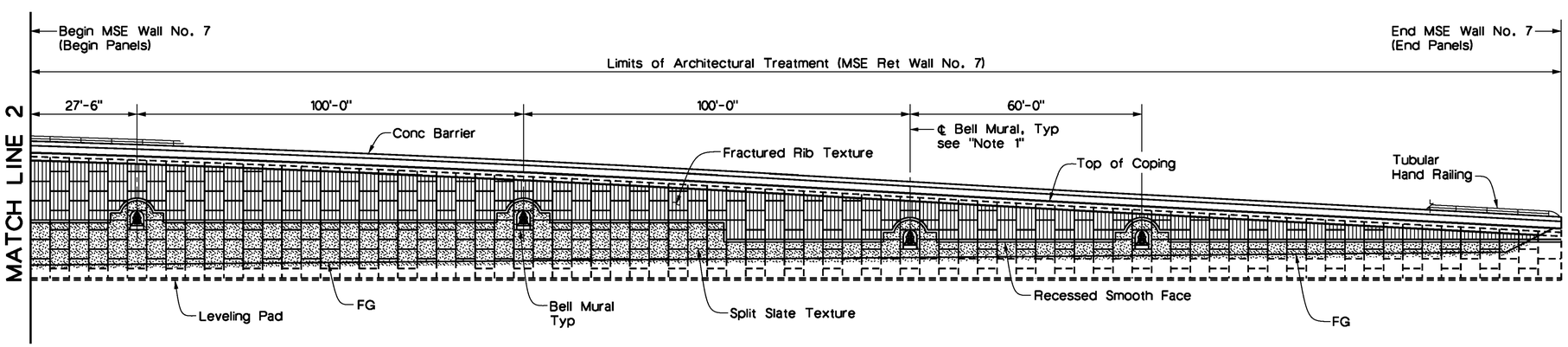

REGISTERED PROFESSIONAL ENGINEER
TODD W. DUDLEY
No. C-39514
Exp. 12/31/2015
CIVIL
STATE OF CALIFORNIA

AS-BUILT
08/01/14

Note:

1. For Bell Mural details, Fractured Rib Texture & Split Slate Texture, see "Retaining Wall Architectural Details No. 3" sheet.

ARCHITECTURAL TREATMENT

1/16" = 1'-0"

Don't Dig...Until You Call U.S.A. Toll Free
811
for the location of buried utility lines.
Don't disrupt vital services.
TWO WORKING DAYS BEFORE YOU DIG

PLANS PREPARED BY:
AECOM
901 VIA PIEMONTE
ONTARIO, CA 91764
(909) 579-3050

REGISTERED PROFESSIONAL ENGINEER
ROBERT PRICE
No. C56855
Exp. 6/30/13
CIVIL
STATE OF CALIFORNIA

MARK	REVISIONS	APPR	DATE
AS-BUILT	REVISED AS NOTED	TD	8/01/14

DESIGN BY R.A.P. DRAWN BY S.D. CHECKED BY M.C./A.S.

IOWA AVENUE
GRADE SEPARATION
RETAINING WALL
ARCHITECTURAL DETAILS NO. 2

DWG NO. R-4237
S-121
SHEET 125 OF 133
SCALE: AS SHOWN

AS-BUILT

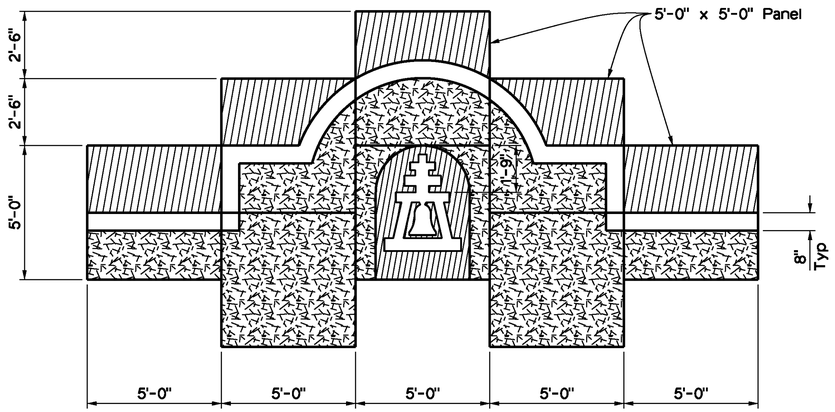

ENLARGED MOTIF PANELS

3/8" = 1'-0"

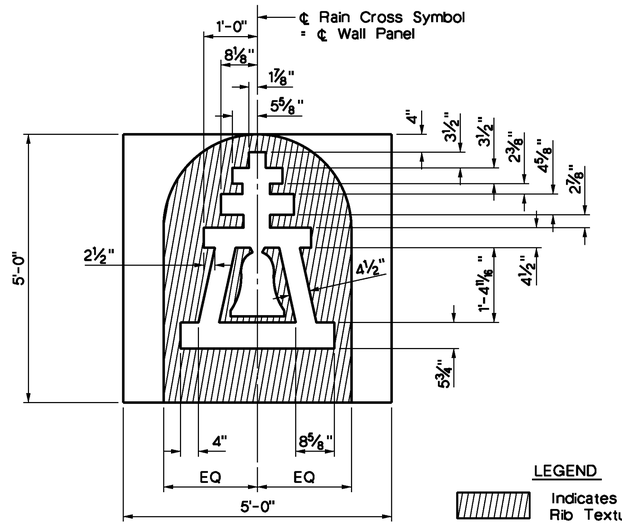

LEGEND

Indicates Fractured Rib Texture

RAIN CROSS DETAIL

3/4" = 1'-0"

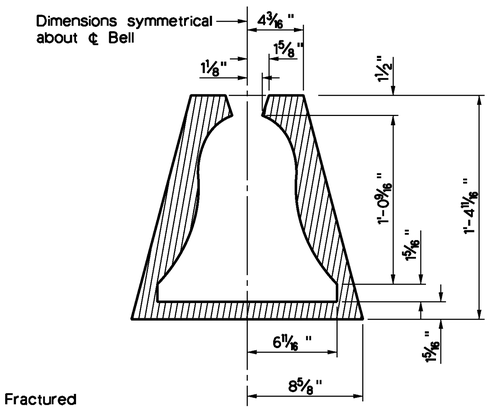

BELL DETAIL

No Scale

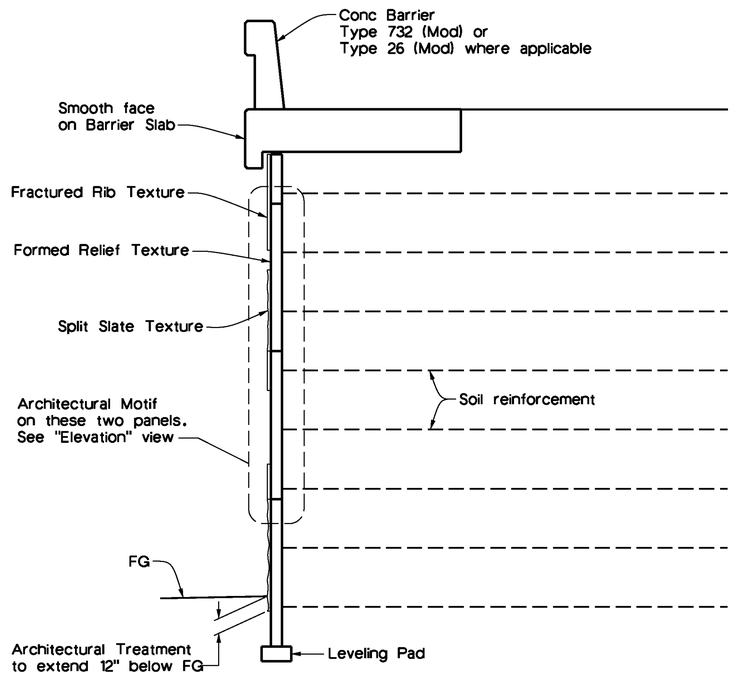

TYPICAL SECTION

No Scale

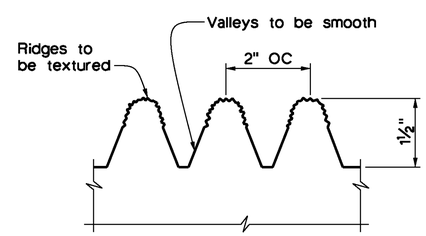

FRACTURED RIB TEXTURE

No Scale

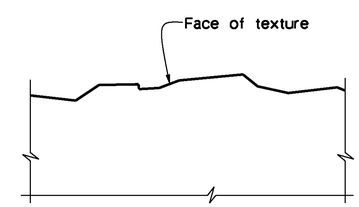

SPLIT SLATE TEXTURE

No Scale

REGISTERED PROFESSIONAL ENGINEER TODD W. DUDLEY No. C-39514 Exp. 12/31/2015 CIVIL STATE OF CALIFORNIA

AS-BUILT
08/01/14

Don't Dig...Until You Call U.S.A. Toll Free 811 for the location of buried utility lines. Don't disrupt vital services.
TWO WORKING DAYS BEFORE YOU DIG

PLANS PREPARED BY:
AECOM
901 VIA PIEMONTE
ONTARIO, CA 91764
(909) 579-3050

REGISTERED PROFESSIONAL ENGINEER ROBERT PRICE No. C56855 Exp. 6/30/13 CIVIL STATE OF CALIFORNIA

MARK	REVISIONS	APPR	DATE
AS-BUILT	REVISED AS NOTED	TD	8/01/14

DESIGN BY R.A.P. DRAWN BY S.D. CHECKED BY M.C./A.S.

IOWA AVENUE
GRADE SEPARATION
RETAINING WALL
ARCHITECTURAL DETAILS NO. 3

DWG NO. R-4237
S-122
SHEET 126 OF 133
SCALE: AS SHOWN

AS-BUILT

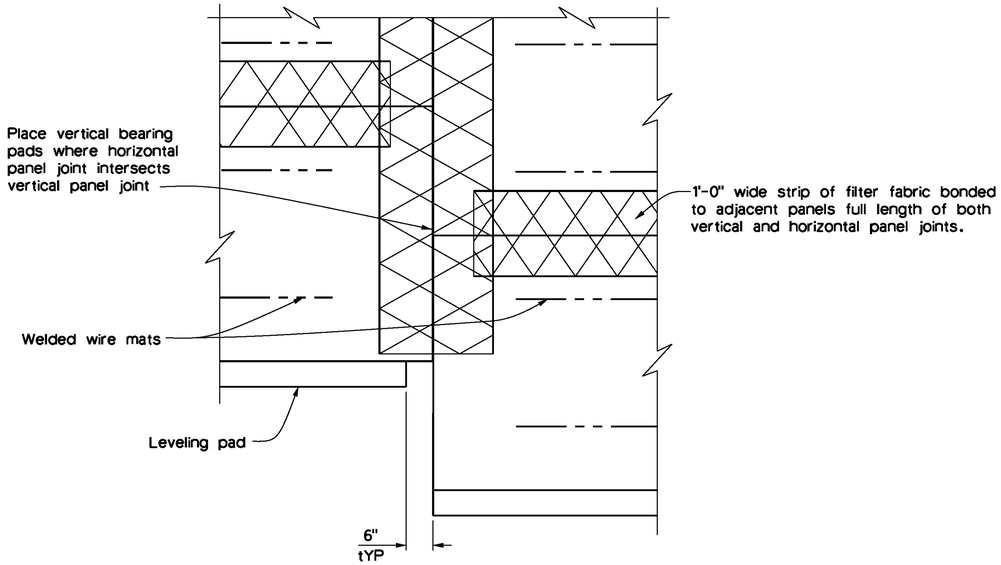

REAR ELEVATION
No Scale

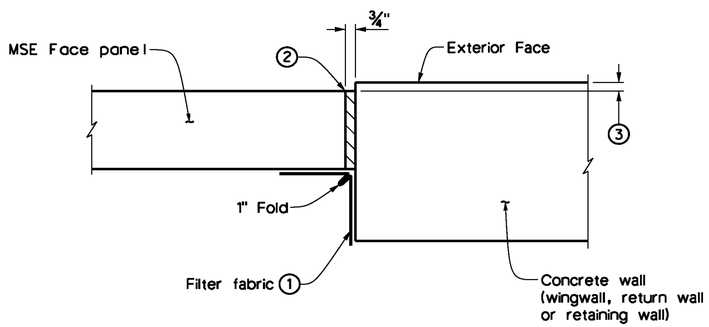

MSE FACE PANEL-TO-CONCRETE WALL JOINT DETAIL
No Scale

LEGEND:

1. Bond a strip of filter fabric, 1'-6" wide, to back of MSE panels and the adjacent concrete wall for entire length of vertical joint.
2. Bond expansion joint material to the concrete wall.
3. Offset between face of MSE face panel and face of the concrete wall as dictated by location of layout lines shown elsewhere in Project Plans.

GENERAL NOTES (MSE WALLS)

DESIGN: AASHTO LRFD Bridge Design Specifications, 3rd Edition with 2005 & 2006 Interims and the Caltrans Amendments v3.06.01 except for retaining walls.

For earth retaining systems:
BRIDGE DESIGN SPECIFICATIONS
(LFD April 2000 by CALTRANS)

LIVE LOAD: Surcharge = 240 lb/ft^2

SOIL PARAMETERS:

Internal design ϕ = 34°, γ = 120 lb/ft^3
External design ϕ (Backfill) = 30°, γ = 120 lb/ft^3
ϕ (Foundation) = 30°
Sliding Friction μ = 0.5

Refer to foundation report prepared by Diaz-Yourman & Associaates, dated, April 10, 2009 (Revised Aug 4, 2011) for site-specific soils data, bearing capacities and foundation design recommendations.

PRECAST CONCRETE PANELS:

f'c = 4,000 psi (Concrete compressive strength at 28 days)
fy = 60,000 psi (Yield strength of reinforcement)

SOIL REINFORCEMENT:

Welded wire mats: fy = 65,000 psi (Yield strength)
Coupler: fy = 36,000 psi (Yield strength)
Corrosion rate = 1.1 mils/year (Design Life = 75 years)

REINFORCED CONCRETE:

f'c = 3,600 psi, except as noted
(Concrete compressive strength at 28 days)
fy = 60,000 psi (Yield strength of reinforcement)

ABBREVIATIONS

MSE = Mechanically stabilized embankment
UNC = Unified coarse threads

INSPECTION WIRE NOTES:

1. A set of 18 inspection wires are required for every MS section of at least 100 feet long with a height greater than 17 feet. Sets should be located approximately 500 feet apart, along the LOL. Array the wires to cover the surface evenly from top to bottom of exposed face. Please wires every fourth panel column along the LOL (20 feet apart) and number them in the shop drawings.
2. Center inspection wire in face panel.
3. Fabricate inspection wires from W11 wire representative of the welded wire mats, with 3/8" dia - 16 UNC threads for at least 1½" of one end.
4. Place inspection wire horizontal and perpendicular to the wall panel prior to backfilling. After backfill placement to a level at least 2'-0" above the inspection wire, dry pack opening with 1000 to 1500 psi mortar. Trowel mortar smooth and flush with face of panel.
5. Encapsulate threaded end with corrosion inhibiting mastic, and secure round vinyl cover with nylon tie.

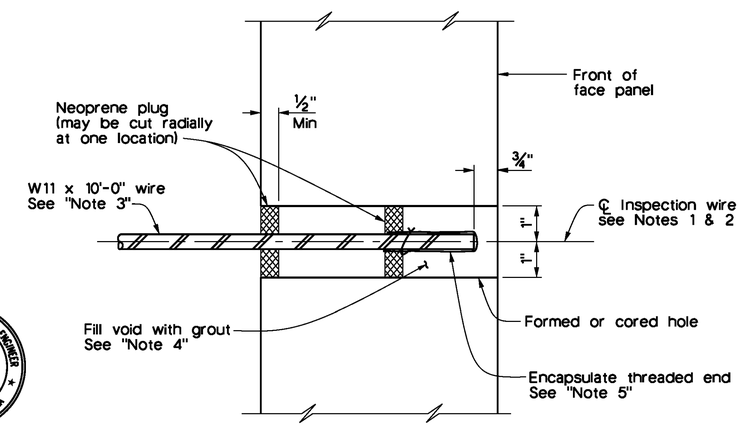

SECTION THRU INSPECTION WIRE
No Scale

RECORDED PROFESSIONAL ENGINEER TODD W. DUDLEY No. C-39514 Exp. 12/31/2015 CIVIL STATE OF CALIFORNIA

AS-BUILT 08/01/14

Don't Dig...Until You Call U.S.A. Toll Free 811 for the location of buried utility lines. Don't disrupt vital services. TWO WORKING DAYS BEFORE YOU DIG

PLANS PREPARED BY:
AECOM
901 VIA PIEMONTE
ONTARIO, CA 91764
(909) 579-3050

REGISTERED PROFESSIONAL ENGINEER ROBERT PRICE No. C56855 Exp. 6/30/13 CIVIL STATE OF CALIFORNIA

MARK	REVISIONS	APPR	DATE
AS-BUILT	REVISED AS NOTED	TD	8/01/14

DESIGN BY R.A.P. DRAWN BY S.D. CHECKED BY M.C./A.S.

IOWA AVENUE
GRADE SEPARATION

MECHANICALLY STABILIZED EMBANKMENT DETAIL NO. 1

DWG NO. R-4237
S-123
SHEET 127 OF 133
SCALE: AS SHOWN

AS-BUILT

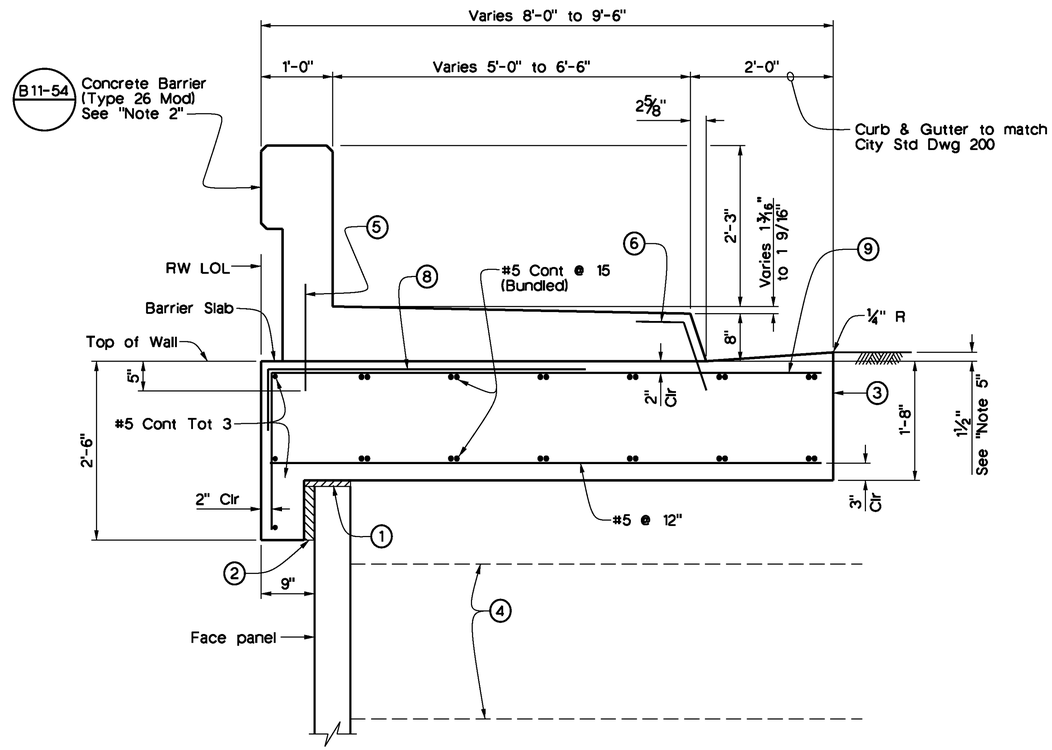

SECTION AT TOP OF WALL WITH BARRIER SLAB AND CONCRETE BARRIER TYPE 26 (MOD)

No Scale

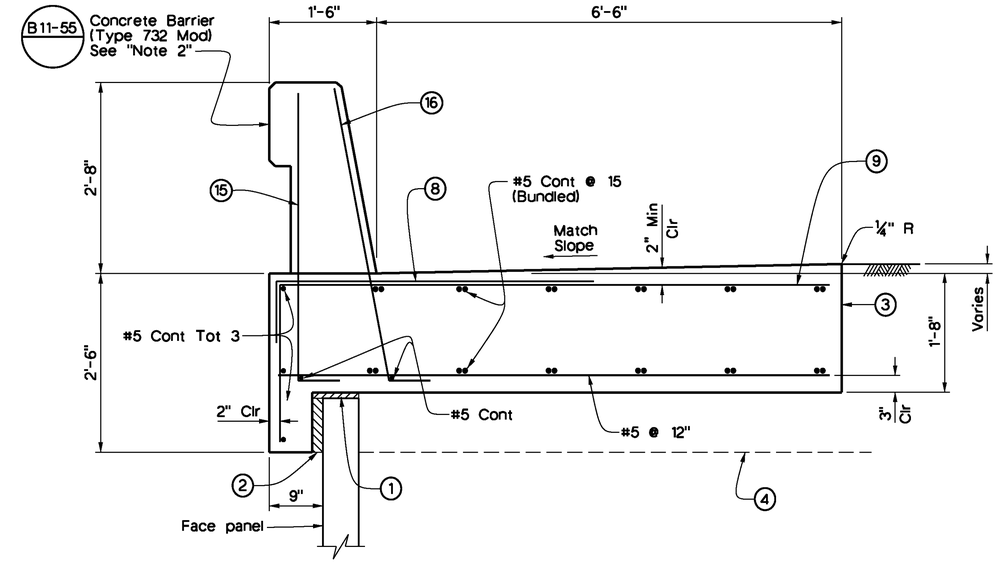

SECTION AT TOP OF WALL WITH BARRIER SLAB AND CONCRETE BARRIER TYPE 732 (MOD)

No Scale

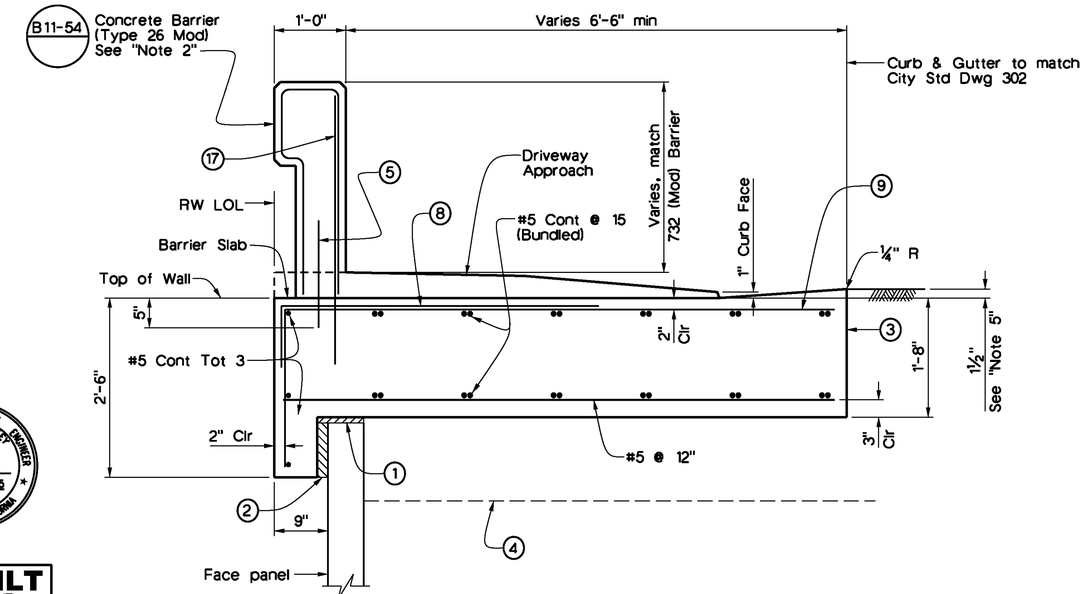

SECTION AT TOP OF WALL WITH BARRIER SLAB AND SIDEWALK DRIVEWAY

No Scale

LEGEND:

1. 1" Expanded polystyrene.
2. 2" Expanded polystyrene. Recess expanded polystyrene 2" into barrier slab.
3. Contact joint.
4. Welded Wire Mat Soil reinforcement.
5. #4 x 1'-6" @ 18" (To be in place prior to barrier slab concrete).
6. #4 1'-0" @ 18" (To be in place prior to barrier slab concrete).
8. #5 5'-6" @ 12" bundled with 9 bars.
9. #5 varies @ 12"
11. AC Overlay on barrier slab.
12. 4'-0" wide pavement reinforcing fabric.
13. Except 2'-0" when coping and barrier slab occur along the top of the same wall.
14. 1/2" expansion joints in coping at every fourth panel joint.

LEGEND (CONT):

15. #5 6 1/4" @ 1'-4" (To be in place prior to barrier slab concrete).
16. #5 6 1/4" @ 8" (To be in place prior to barrier slab concrete).
17. #5 6 1/4" @ 9" (To be in place prior to barrier slab concrete).

NOTES:

1. Clearance to reinforcing steel in concrete barrier to be 1".
2. Not all barrier reinforcement shown.
3. No expansion joints in concrete barrier or barrier slab within MSE wall limits.
4. Install chain link fence as indicated elsewhere in Project Plans.
5. Transition to match the approach slab over 10 feet.

REGISTERED PROFESSIONAL ENGINEER
TODD W. DUDLEY
No. C-39514
Exp. 12/31/2015
CIVIL
STATE OF CALIFORNIA

AS-BUILT
08/01/14

Don't Dig...Until You Call U.S.A. Toll Free
811
for the location of buried utility lines.
Don't disrupt vital services.
TWO WORKING DAYS BEFORE YOU DIG

PLANS PREPARED BY:
AECOM
901 VIA PIEMONTE
ONTARIO, CA 91764
(909) 579-3050

REGISTERED PROFESSIONAL ENGINEER
ROBERT PRICE
No. C56855
Exp. 6/30/13
CIVIL
STATE OF CALIFORNIA

MARK	REVISIONS	APPR	DATE
AS-BUILT	REVISED AS NOTED	TD	8/01/14

DESIGN BY R.A.P. DRAWN BY S.D. CHECKED BY M.C./A.S.

IOWA AVENUE
GRADE SEPARATION
MECHANICALLY STABILIZED EMBANKMENT DETAIL NO. 2

DWG NO. R-4237
S-124
SHEET 128 OF 133
SCALE: AS SHOWN

AS-BUILT

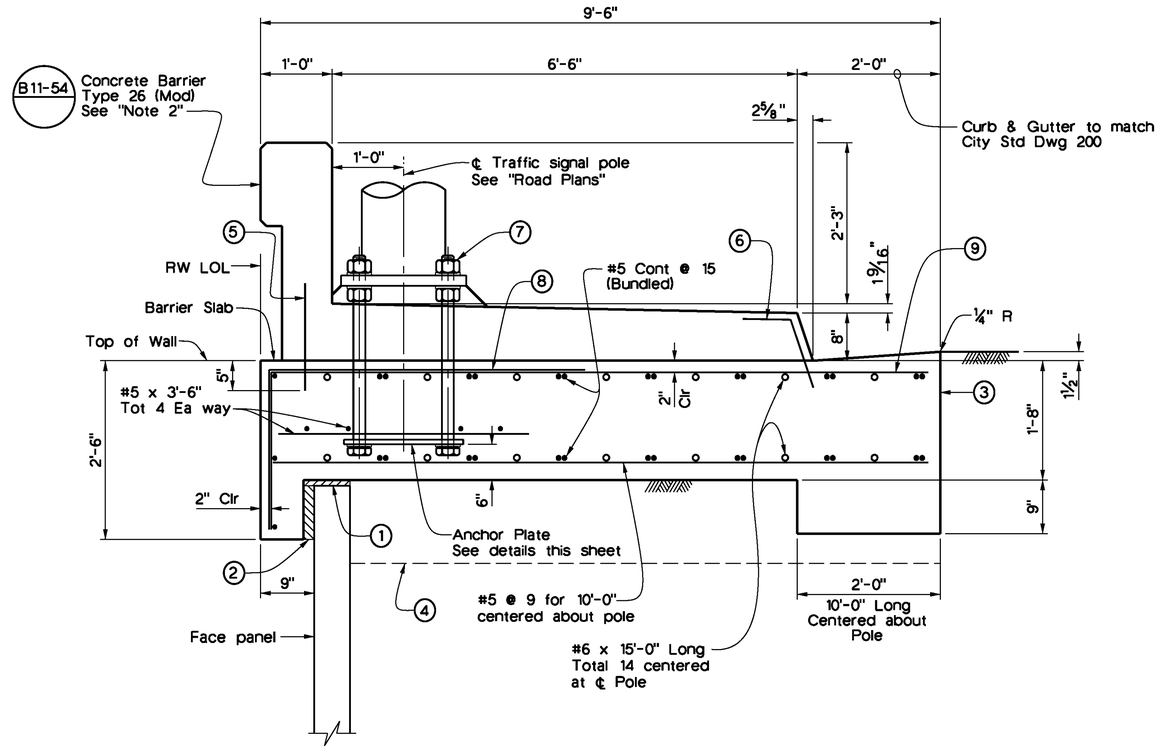

SECTION AT TOP OF WALL WITH BARRIER SLAB TRAFFIC SIGNAL POLE AND CONCRETE BARRIER

No Scale

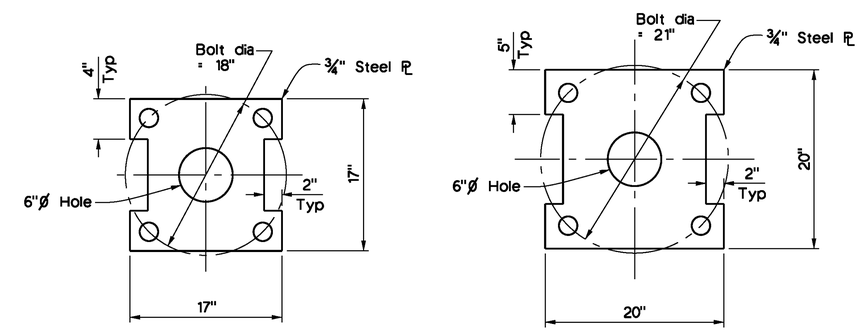

Bolt Dia = 18"
Pole 19-14-100

Bolt Dia = 21"
Pole 29-5-100

ANCHOR PLATE DETAILS

1½" = 1'-0"

LEGEND:

1. 1" Expanded polystyrene.
2. 2" Expanded polystyrene. Recess expanded polystyrene 2" into barrier slab.
3. Contact joint.
4. Welded Wire Mat Soil reinforcement.
5. #4 x 1'-6" @ 18" (To be in place prior to barrier slab concrete).
6. #4 1'-0" @ 18" (To be in place prior to barrier slab concrete).
7. 2" dia A307 anchor bolts with nuts & washers.
8. #5 4'-7" @ 12" bundled with 9 bars.
9. #5 varies @ 12"

NOTES:

1. Clearance to reinforcing steel in concrete barrier to be 1".
2. Not all barrier reinforcement shown.
3. No expansion joints in concrete barrier or barrier slab within MSE wall limits.
4. For signal pole information, see "Road Plans" and Caltrans Std Plan ES-7F & ES-7G.

REGISTERED PROFESSIONAL ENGINEER TODD W. DUDLEY No. C-39514 Exp. 12/31/2015 CIVIL STATE OF CALIFORNIA

AS-BUILT
08/01/14

Don't Dig...Until You Call U.S.A. Toll Free 811 for the location of buried utility lines. Don't disrupt vital services.
TWO WORKING DAYS BEFORE YOU DIG

PLANS PREPARED BY:
AECOM
901 VIA PIEMONTE
ONTARIO, CA 91764
(909) 579-3050

REGISTERED PROFESSIONAL ENGINEER ROBERT PRICE No. C56855 Exp. 6/30/13 CIVIL STATE OF CALIFORNIA

MARK	REVISIONS	APPR	DATE
AS-BUILT	REVISED AS NOTED	TD	8/01/14

DESIGN BY R.A.P DRAWN BY S.D. CHECKED BY M.C./A.S.

IOWA AVENUE
GRADE SEPARATION

MECHANICALLY STABILIZED EMBANKMENT DETAIL NO. 3

DWG NO. R-4237
S-125
SHEET 129 OF 133
SCALE: AS SHOWN

AS-BUILT

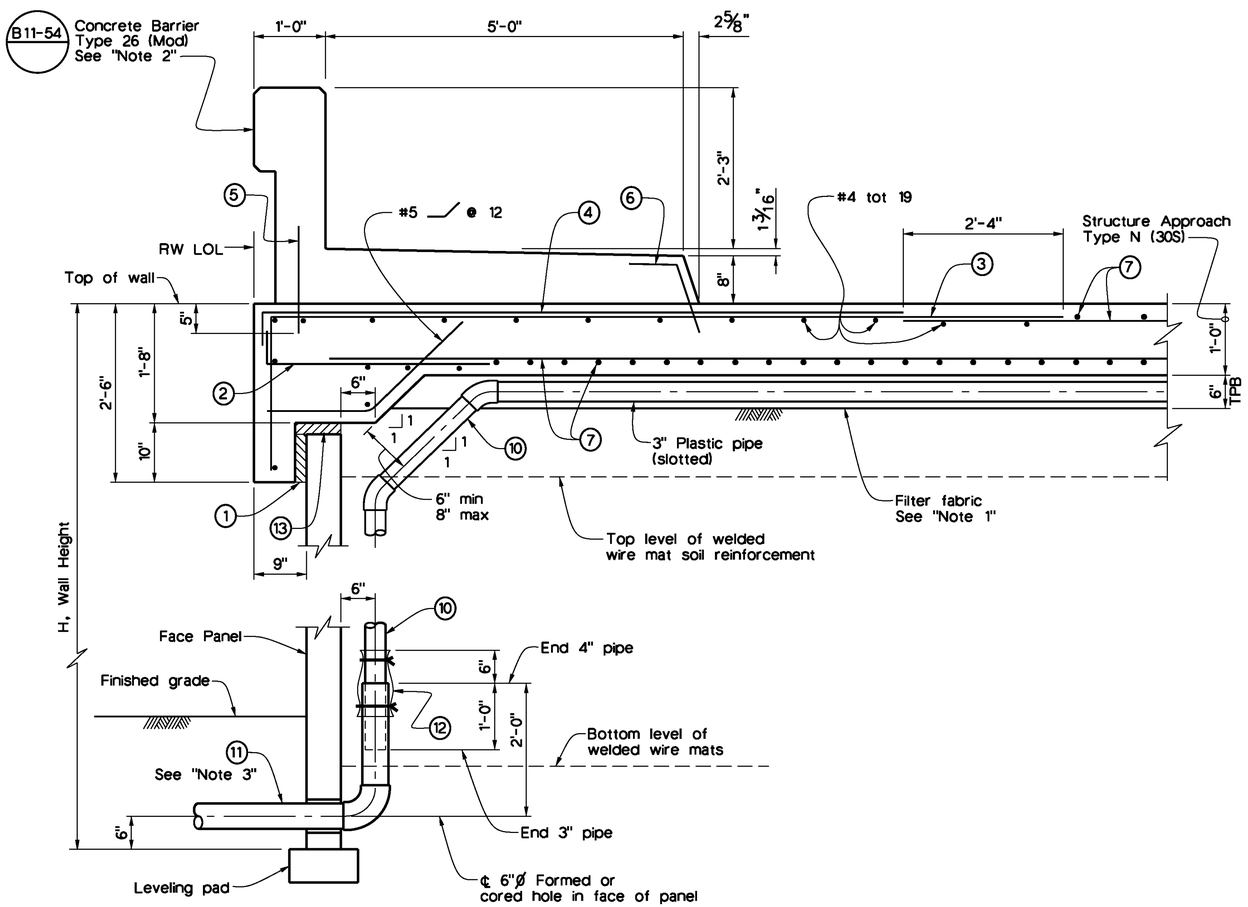

SECTION AT TOP OF WALL WITH BARRIER SLAB STRUCTURE APPROACH SLAB AND CONCRETE BARRIER

No Scale

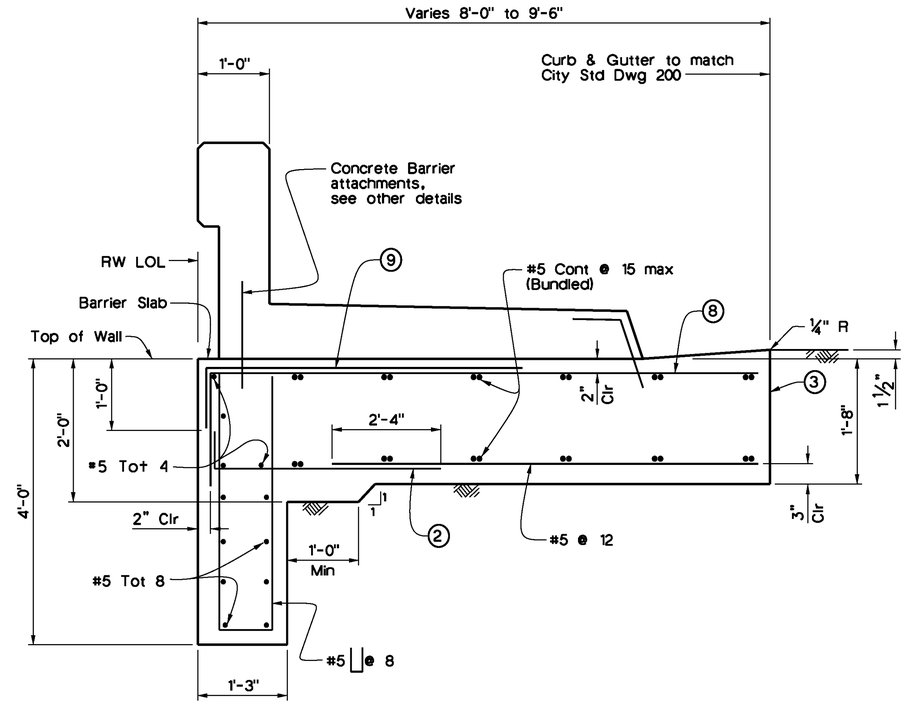

SECTION OF BARRIER SLAB WITH TURNDOWN

No Scale

Barrier Slab Type A shown with Conc Barrier (Type 26 Mod)
For Barrier Slab Type B, Replace Conc Barrier (Type 26 Mod) with (Type 732 Mod). For reinforcing legend, see "Mechanically Stabilized Embankment Detail No. 2" sheet.

LEGEND:

1. 2" Expanded polystyrene recessed 2" into barrier slab at front of MSE face panel.
2. #5 3'-4" @ 12
3. #5 11'-4" @ 12
4. #5 9'-0" @ 12 bundle with 3 bars.
5. #4 1'-0" @ 18 (To be in place prior to approach slab concrete).
6. #4 1'-0" @ 18 (To be in place prior to approach slab concrete).
7. Approach slab reinforcement
8. #5 5'-6" @ 12" bundled with 9 bars.
9. #5 5'-6" @ 12
10. 3" Plastic pipe and fittings (unslotted)
11. 4" Sch 80 PVC outlet pipe and fittings (unslotted)
12. 1'-0" wide x 2'-0" filter fabric wrapped around pipe and secured with nylon ties
13. 1" Expanded polystyrene

NOTES:

1. Low end of subgrade drain shown, at high end install cap at end of ¾" slotted pipe. Subgrade drain located at end of structure approach slab, see "Subgrade Drain Detail". Filter fabric.
2. Not all barrier reinforcement shown.
3. Outlet details shown elsewhere in Project Plans.
4. At acute corners of approach slab, bend reinforcement as required to clear expansion joint.

REGISTERED PROFESSIONAL ENGINEER TODD W. DUDLEY No. C-39514 Exp. 12/31/2015 CIVIL STATE OF CALIFORNIA

AS-BUILT 08/01/14

Don't Dig...Until You Call U.S.A. Toll Free 811 for the location of buried utility lines. Don't disrupt vital services. TWO WORKING DAYS BEFORE YOU DIG

PLANS PREPARED BY:
AECOM
901 VIA PIEMONTE
ONTARIO, CA 91764
(909) 579-3050

REGISTERED PROFESSIONAL ENGINEER ROBERT PRICE No. C56855 Exp. 6/30/13 CIVIL STATE OF CALIFORNIA

MARK	REVISIONS	APPR	DATE
AS-BUILT	REVISED AS NOTED	TD	8/01/14

DESIGN BY R.A.P. DRAWN BY S.D. CHECKED BY M.C./A.S.

IOWA AVENUE GRADE SEPARATION

MECHANICALLY STABILIZED EMBANKMENT DETAIL NO. 4

DWG NO. R-4237
S-126
SHEET 130 OF 133
SCALE: AS SHOWN

AS-BUILT

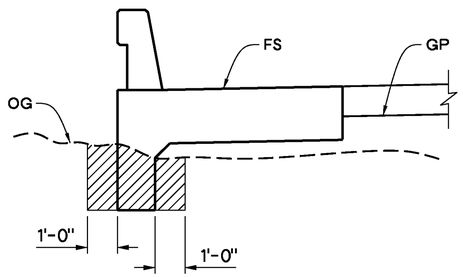

BARRIER SLAB TYPE A OR B

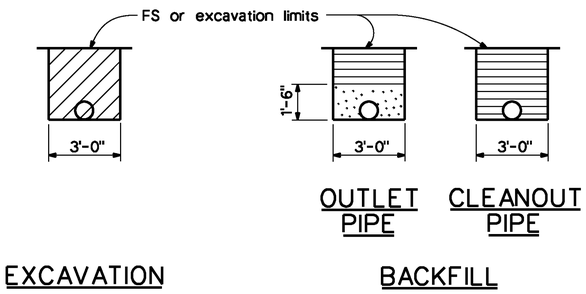

OUTLET OR CLEANOUT PIPE FOR UNDERDRAIN

No Scale
See "Note 3"

ABBREVIATIONS:

OG	Original ground
FS	Planned finished surface
GP	Planned grading plane

LEGEND:

- Limits of structure excavation
- Limits of structure backfill
- Limits of permeable material

Notes:

1. Limits to FS except to GP when in roadway section.
2. Locate 8" perforated underdrain below bottom level of soil reinforcement.
3. Maximum spacing of outlet pipes is 200 ft.
4. At sags in profile of underdrain, install outlet pipe for each direction of flow.

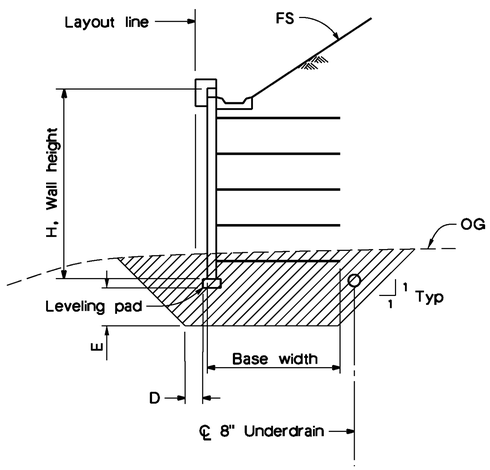

MSE WALL

(Sloping backfill shown, Roadway section similar)

LIMITS OF EXCAVATION

No Scale

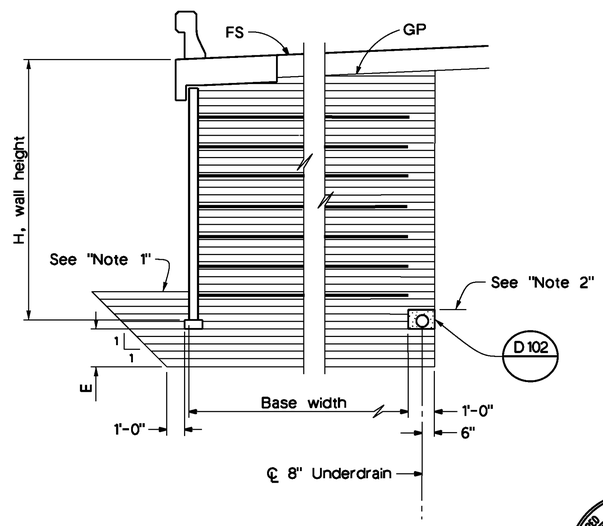

ROADWAY SECTION WITH BASE WIDTH 16' OR GREATER

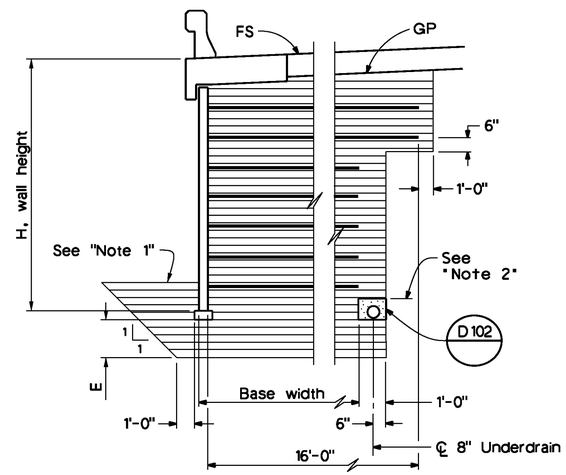

ROADWAY SECTION WITH BASE WIDTH LESS THAN 16'

LIMITS OF BACKFILL

No Scale

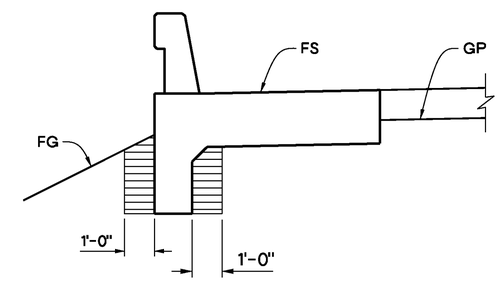

BARRIER SLAB TYPE A OR B

REGISTERED PROFESSIONAL ENGINEER TODD W. DUDLEY No. C-39514 Exp. 12/31/2015 CIVIL STATE OF CALIFORNIA

AS-BUILT 08/01/14

MINIMUM EXCAVATION DIMENSIONS

	MSE DESIGN HEIGHTS	
	Up to 15 ft	15 ft to 40 ft
D	1 ft	1 ft
E	1 ft	2 ft

Don't Dig...Until You Call U.S.A. Toll Free 811 for the location of buried utility lines. Don't disrupt vital services. TWO WORKING DAYS BEFORE YOU DIG

PLANS PREPARED BY:
AECOM
901 VIA PIEMONTE
ONTARIO, CA 91764
(909) 579-3050

REGISTERED PROFESSIONAL ENGINEER ROBERT PRICE No. C56855 Exp. 6/30/13 CIVIL STATE OF CALIFORNIA

MARK	REVISIONS	APPR	DATE
AS-BUILT	REVISED AS NOTED	TD	8/01/14

DESIGN BY R.A.P. DRAWN BY S.D. CHECKED BY M.C./A.S.

IOWA AVENUE
GRADE SEPARATION
MECHANICALLY STABILIZED EMBANKMENT DETAIL NO. 5

DWG NO. R-4237
S-127
SHEET 131 OF 133
SCALE: AS SHOWN

AS-BUILT

LEGEND OF BORING OPERATIONS

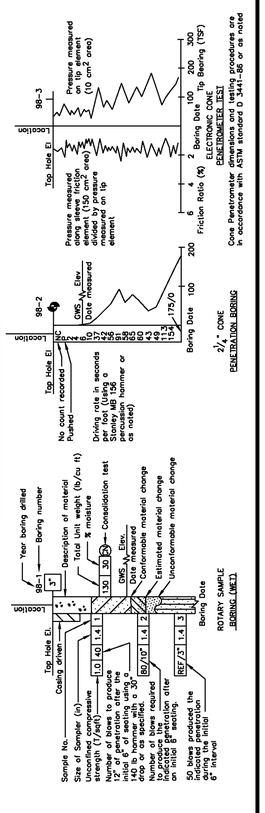

IN-SITU, LAB & FIELD TEST DESIGNATIONS

- (AL) ATTERBERG LIMITS
- (CA) CHEMICAL ANALYSIS
- (CN) CONSOLIDATION
- (CU) CONSOLIDATED UNDRAINED TRIAXIAL
- (DS) DIRECT SHEAR
- (DD) MAX. DRY DENSITY
- (HY) HYDROMETER
- (SA) SIEVE ANALYSIS
- (SE) SAND EQUIVALENT
- (UC) UNCONFINED COMPRESSION
- (UU) UNCONSOLIDATED UNDRAINED TRIAXIAL
- (W) WASH #200

TYPE OF BORINGS

- 2¼" CONE PENETRATION
- ROTARY WASH
- ELECTRONIC CONE PENETROMETER
- AUGER BORING (DRY)
- HYDROMETER
- TEST PIT
- DIAMOND CORE BORING
- SOIL TUBE

LEGEND OF EARTH MATERIALS (USCS) BASED ON ASTM D2487, D2488

- FILL MATERIAL
- CLAY (CL or CH)
- SILT (ML or MH)
- PEAT and/or ORGANIC MATTER
- WELL-GRADED GRAVEL (GW)
- POORLY-GRADED GRAVEL (GP)
- SILTY GRAVEL (GM)
- CLAYEY GRAVEL (GC)
- POORLY-GRADED SAND (SP)
- WELL-GRADED SAND (SW)
- SILTY SAND (SM) or SANDY SILT
- CLAYEY SAND (SC) or SANDY LEAN CLAY
- COBBLES/BOULDERS
- IGNEOUS ROCK
- SEDIMENTARY ROCK
- METAMORPHIC ROCK

CONSISTENCY CLASSIFICATION FOR SOILS

According to the Standard Penetration Test (ASTM D-1586)

SPT N-value (blows/ft)	Granular	SPT N-value (blows/ft)	Cohesive
0 – 4	Very Loose	< 2	Very Soft
5 – 10	Loose	2 – 4	Soft
11 – 30	Medium Dense	5 – 8	Firm
31 – 50	Dense	9 – 15	Stiff
> 50	Very Dense	16 – 30	Very Stiff
		> 31	Hard

Note: Visual classification of earth materials are based on field inspection and are confirmed or revised with laboratory test results as necessary.

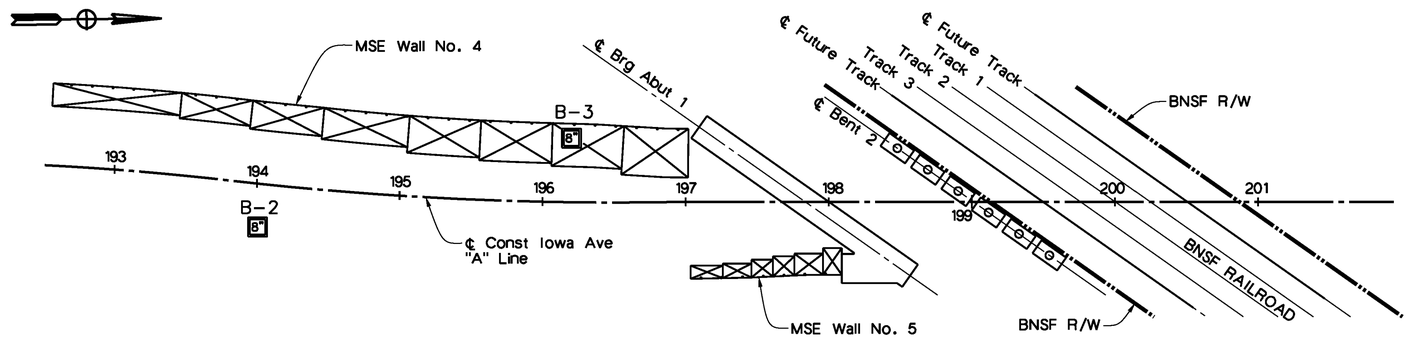

PLAN

1" = 50'

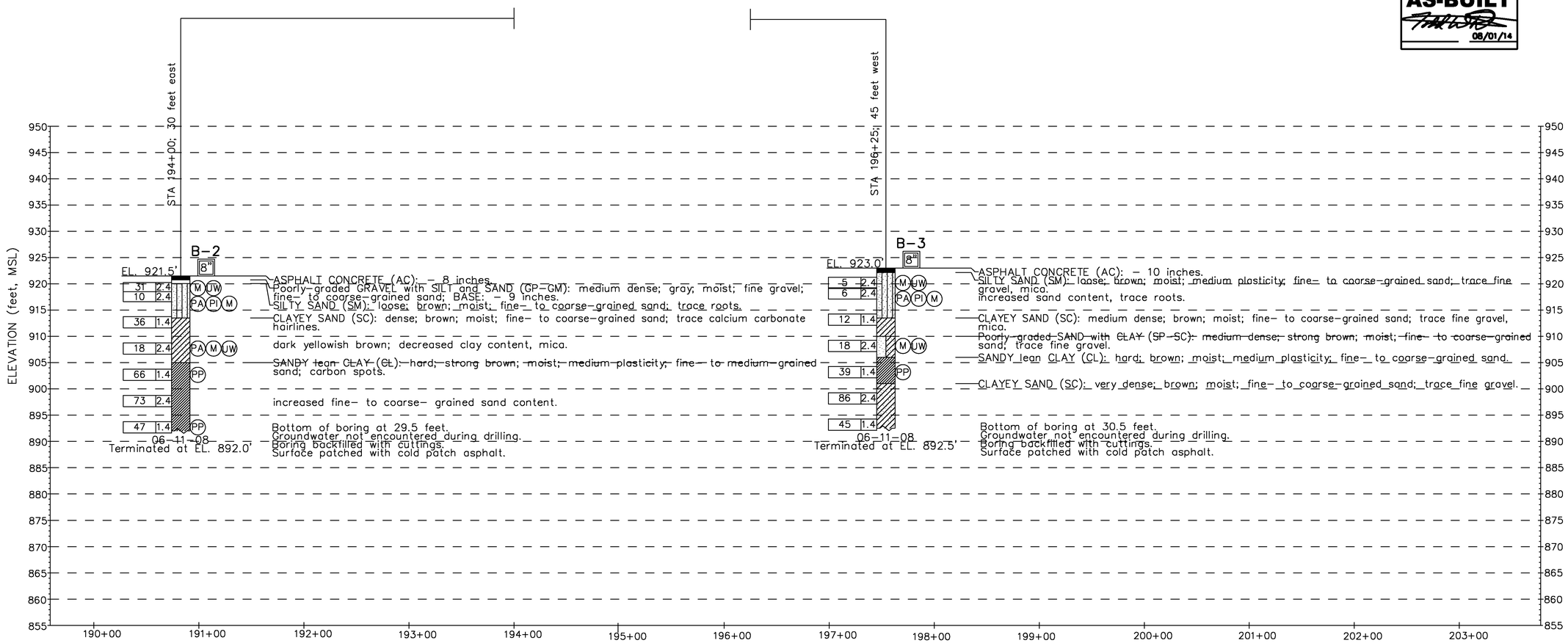

PROFILE

Vert: 1" = 10'
Horiz: 1" = 50'

REGISTERED PROFESSIONAL ENGINEER TODD W. DUDLEY No. C-39514 Exp. 12/31/2015 CIVIL STATE OF CALIFORNIA

AS-BUILT 08/01/14

Don't Dig...Until You Call U.S.A. Toll Free 1-800-227-2600 for the location of buried utility lines. Don't disrupt vital services.
TWO WORKING DAYS BEFORE YOU DIG

PLANS PREPARED BY:
DIAZ • YOURMAN & ASSOCIATES
1616 East 17th Street
Santa Ana, CA 92705
(714) 245-2950

REGISTERED PROFESSIONAL ENGINEER SATHISKUMAR No. 76195 Exp. 6/30/12 CIVIL STATE OF CALIFORNIA

MARK	REVISIONS	APPR	DATE
AS-BUILT	REVISED AS NOTED	TD	8/01/14

DESIGN BY S.S. DRAWN BY S.S. CHECKED BY S.W.

IOWA AVENUE
GRADE SEPARATION

LOG OF TEST BORINGS
RETAINING WALL NO. 4

DWG NO. R-4237
S-128
SHEET 132 OF 133
SCALE: AS SHOWN

AS-BUILT

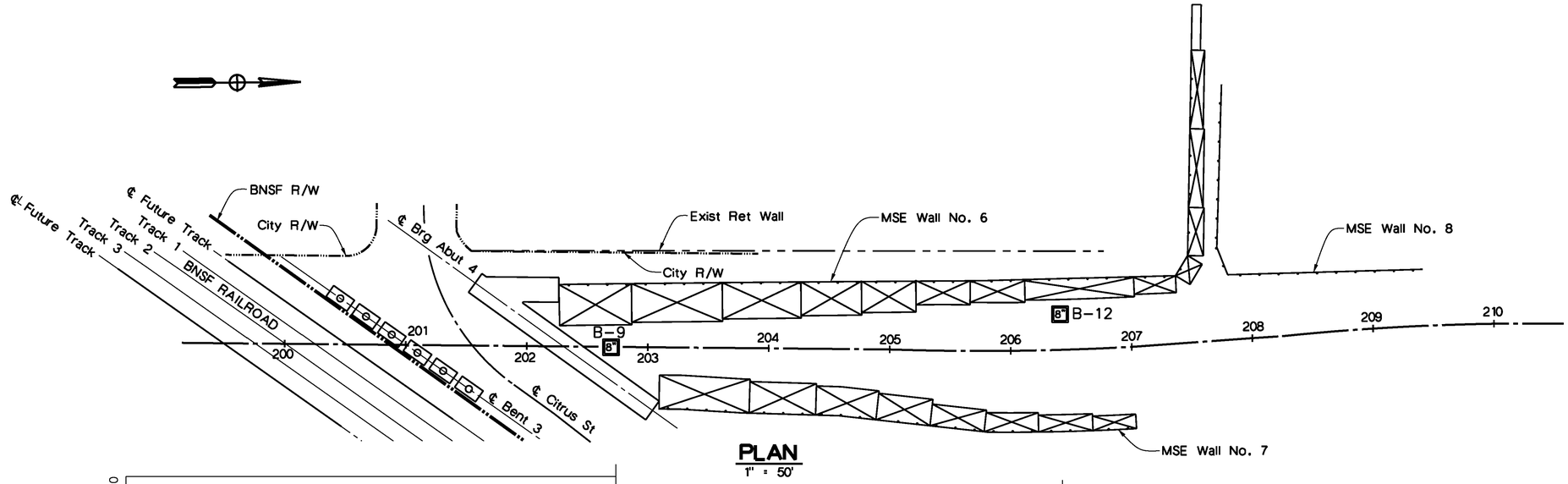

PLAN
1" = 50'

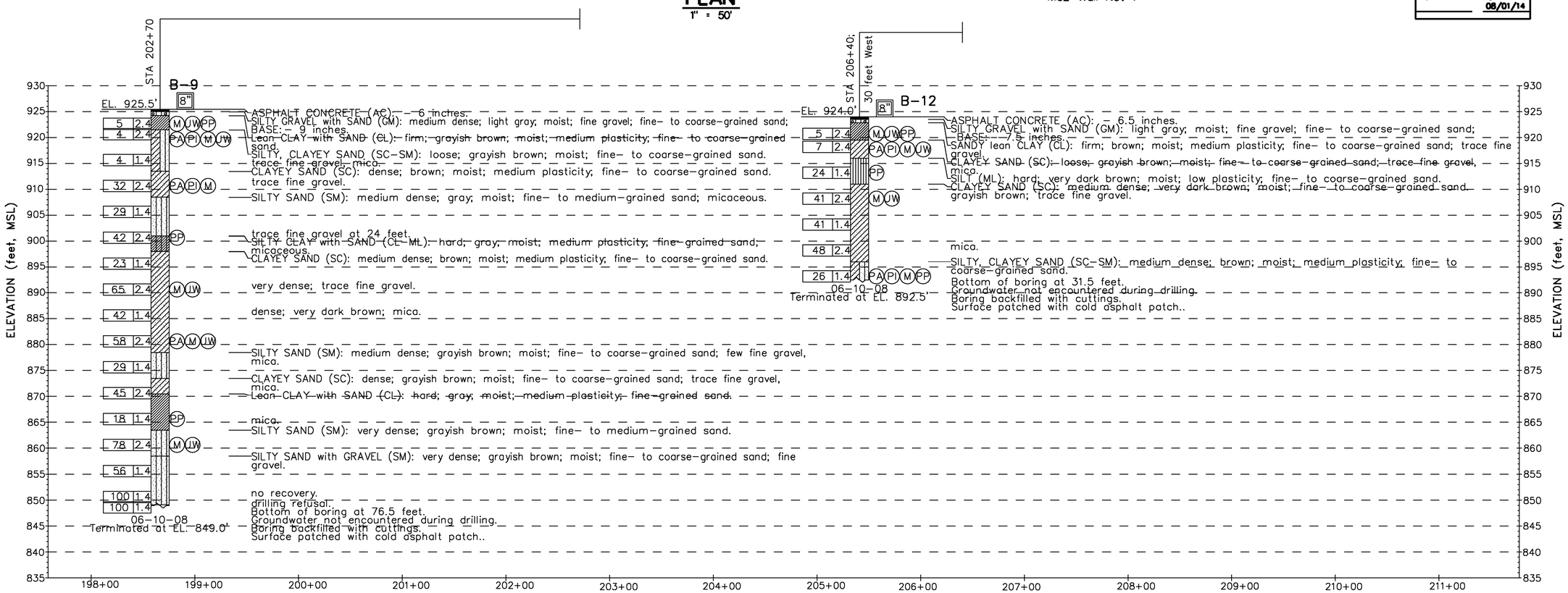

PROFILE
Vert: 1" = 10'
Horiz: 1" = 50'

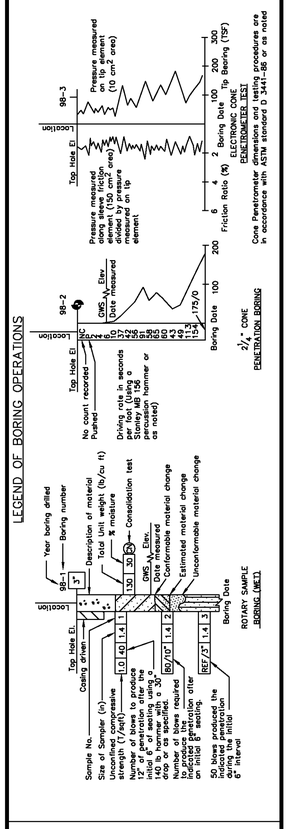

Don't Dig...Until You Call U.S.A. Toll Free
1-800-227-2600
for the location of buried utility lines.
Don't disrupt vital services.
TWO WORKING DAYS BEFORE YOU DIG

PLANS PREPARED BY:
DIAZ • YOURMAN & ASSOCIATES
1616 East 17th Street
Santa Ana, CA 92705
(714) 245-2950

REGISTERED PROFESSIONAL ENGINEER SITTAMPALAM SATHISKUMAR No. 76195 Exp. 6/30/12 CIVIL STATE OF CALIFORNIA

MARK	REVISIONS	APPR	DATE
AS-BUILT	REVISED AS NOTED	TD	8/01/14

DESIGN BY S.S. DRAWN BY S.S. CHECKED BY S.W.

IOWA AVENUE
GRADE SEPARATION
LOG OF TEST BORINGS
RETAINING WALLS
NO. 6, 7 & 8

DWG NO. R-4237
S-129
SHEET 133 OF 133
SCALE: AS SHOWN

REGISTERED PROFESSIONAL ENGINEER TODD W. DUDLEY No. C-39514 Exp. 12/31/2015 CIVIL STATE OF CALIFORNIA

AS-BUILT
08/01/14

AS-BUILT