CONDUCTOR SCHEDULE

			1	2	3	3A	4	4A	5	5A	6	6A	7	7A	8	8A	9	10	11	12	13	
VEHICLE HEADS	#14	T.W.																				
Ø1				3		3		3	3		3		3		3							
Ø2					3		3			3		3		3	6							
Ø3			3	3		3		3	3		3		3		6		3	3	3			
Ø4			3	3		3		3	3		3		3		3							
Ø5															6		3	3				
Ø6				3		3		3	3		3		3		6		3	3				
Ø7							3			3		3		3	3							
Ø8												3		3	6		3	3	3			
PEDESTRIAN HEADS																						
Ø2					2		2			2		2		2	4							
Ø4			2	2		2		2	2		2		2		2							
Ø6				2		2		2	2		2		2		4		2	2				
Ø8												2		2	4		2	2	2			
SPARES			3	3		3		3	3		3		3		6		3	3	3	3	3	
PED. PUSH BUTTON																						
Ø2							1			1		1		1	1							
Ø4				1		1		1	1		1		1		1						1	
Ø6			1	1		1		1	1		1		1		2		1	1	1	1		
Ø8															2		1	1				
DETECTOR CABLE	#12/2	P.E.																				
Ø1															1		1					
Ø2 (INCLUDES BIKE)					3		3			3		3		3		3						
Ø3									1		1		1			1						
Ø4			1	1		1		1	1		1		1		1		1	1	1	1		
Ø5					1		1			1		1		1	1						1	
Ø6 (INCLUDES BIKE)															3		3	3				
Ø7															1		1	1	1	1		
Ø8									1		2		2			2						
12V COMMON	#14	T.W.	1	1		1		1	1		1		1		2		1	1	1	1	1	
120V COMMON	#10		1	1		1		1	1		1		1		2		1	1	1			
SIGNAL SERVICE	#8	T.H.W							2		2		2			2						
LUMINAIRES				2		2		2	2		2		2				2	2	2			
TOTALS	#14	#T.W.	13	22	5	22	9	22	22	9	22	14	22	14	67		22	22	13	5	5	
	#12/2	P.E.	1	1	4	1	4	1	3	4	4	4	4	4	7	6	6	5	2	2	1	
	#12	T.W.																				
	#10		1	1		1		1	1		1		1		2		1	1	1			
	#8	T.H.W		2		2		2	4		4		4			2	2	2	2			
#14 EQUIV.			17.5	31.1	17	31.1	21	31.1	41.7	21	44.7	26	44.7	26	91	22.6	46.1	43.1	25.1	11	8	
CONDUIT SIZE			1½"	2"	1½"	2"	3"	2"	2"	1½"	2"	1½"	2"	1½"	3"	1½"	2"	2"	2"	2"	2"	

EQUIPMENT SCHEDULE

LOCATION	STANDARD	VEHICLE HEADS			PEDESTRIAN HEADS			LUMINAIRE	INT ILLUM STREET NAME SIGN	REMARKS
		HEAD	MOUNTING	BACK PLATE	HEAD	MOUNTING	PPB	WATTAGE		
A	1A(10')	2W3C	TV-2-T	2	1W2C	SP-1-T	1			
B	264-70	1W3C (12")	MAS	1				250W.	Victoria AVE 5800	
	154A,435A	1W3C (12")	MAS	1						
		1W3C	SV-1-T	1	1W2C	SP-1-T	1			
C	1A(10')	2W3C	TV-2-T	2	1W2C	SP-1-T	1			
D	264-70	1W3C (12")	MAS	1				250W.	Arlington AVE 2700	
	154A,435A	1W3C (12")	MAS	1						
		1W3C	SV-1-T	1	1W2C	SP-1-T	1			
E	1A(10')	2W3C	TV-2-T	2	1W2C	SP-1-T	1			
F	264-70	1W3C (12")	MAS	1				250W.	Victoria AVE 5800	
	154A,435A	1W3C (12")	MAS	1						
		1W3C	SV-1-T	1	1W2C	SP-1-T	1			
G	1A(10')	2W3C	TV-2-T	2	1W2C	SP-1-T	1			
H	264-70	1W3C (12")	MAS	1				250W.	Arlington AVE 2700	
	154A,435A	1W3C (12")	MAS	1						
		1W3C	SV-1-T	1	1W2C	SP-1-T	1			
I	Ped/Post						1			
J	Ped/Post						1			

NOTE: TYPE 1A STANDARDS ARE ALUMINUM.

PRESENT PHASE DIAGRAM

FLASHING INDICATIONS: ALL RED

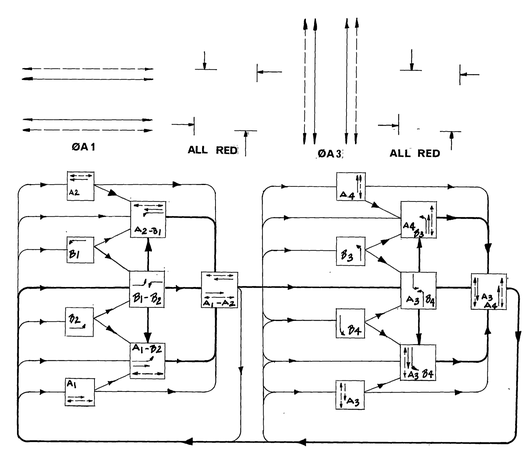

FUTURE PHASE DIAGRAM

MARK	REVISIONS	APPR.	DATE
	AS BUILT PER N/W & S/W CORNER	$	5/9/77
	As-built per HES Revisions	MAC	5/29/86

DESIGNED BY ____ DRAWN BY $ CHECKED BY ____

CITY OF RIVERSIDE
PUBLIC WORKS DEPARTMENT

APPROVED BY
PRINCIPAL ENGINEER
PARK DEPARTMENT
TRAFFIC DIVISION
CHIEF P.W. ENGINEER

APPROVED BY
PUBLIC WORKS DIRECTOR
DATE ____

Arlington Avenue and Victoria Avenue

HORIZ. SCALE: 1" - 20' VERT. SCALE: 1" -

ACCOUNT NO. X-406

SHEET 2 OF 2

FILE NO.