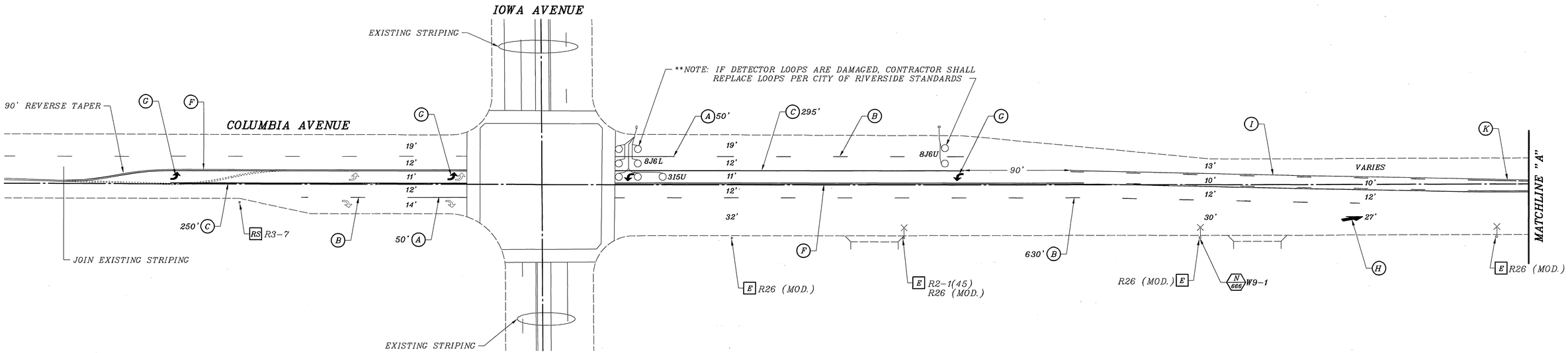

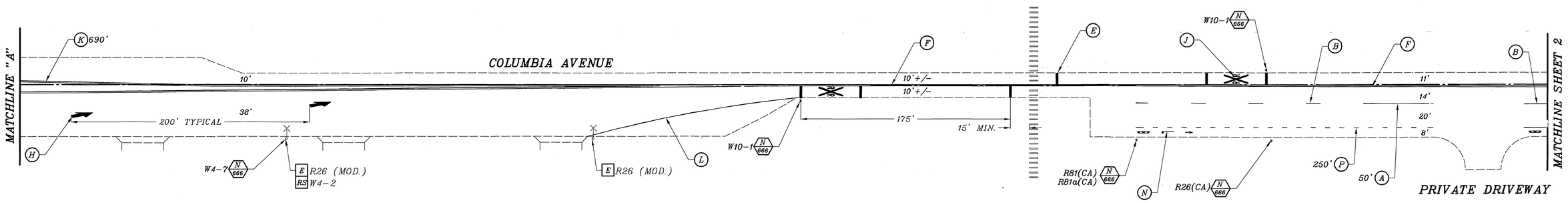

STRIPING LEGEND

- (A) 4" SOLID WHITE STRIPE (STD. PLAN A20A)
- (B) 4" DASHED WHITE STRIPE (STD. PLAN A20A, DETAIL 11)
- (C) 8" SOLID WHITE STRIPE (STD. PLAN A20D, DETAIL 38A)
- (D) 12" SOLID WHITE STRIPE (STD. PLAN A24E)
- (E) 24" SOLID WHITE LIMIT LINE
- (F) DOUBLE YELLOW STRIPE (STD. PLAN A20A, DETAIL 21)
- (G) SOLID WHITE ARROW (STD. PLAN A24A, TYPE IV)
- (H) SOLID WHITE LANE DROP ARROW (STD. PLAN A24A, TYPE VI)
- (I) TWO WAY LEFT TURN STRIPE (STD. PLAN A20B, DETAIL 31)
- (J) RAILROAD CROSSING LEGEND (STD. PLAN A24C)
- (K) DOUBLE YELLOW MEDIAN ISLAND STRIPE (STD. PLAN A20B, DETAIL 28)
- (L) RIGHT EDGELINE STRIPE (STD. PLAN A20B, DETAIL 27B)
- (M) LEFT EDGELINE STRIPE (STD. PLAN A20B, DETAIL 24)
- (N) SOLID WHITE "BIKE LANE" LEGEND AND ARROW
- (O) SOLID WHITE BIKE LANE STRIPE (STD. PLAN A20D, DETAIL 39)
- (P) DASHED WHITE BIKE LANE STRIPE (STD. PLAN A20D, DETAIL 39A)

GENERAL NOTES

1. ALL PAVEMENT DELINEATION WORK SHALL BE PERFORMED BY THE CONTRACTOR. REMOVE ALL CONFLICTING STRIPING, LEGENDS AND MARKINGS BY WET SANDBLASTING.
2. ALL STRIPING AND MARKINGS SHALL BE PAINT, APPLIED IN TWO COATS WITH A MINIMUM OF SEVEN DAYS BETWEEN COATS.
3. ALL EXISTING EQUIPMENT THAT IS REMOVED AND SALVAGED SHALL BE RETURNED TO THE CITY OF RIVERSIDE YARD.
4. ALL NEW SIGNAGE SHALL HAVE REFLECTIVE SHEETING (ASTM TYPE 11) AS DIRECTED BY THE ENGINEER.
5. ALL STRIPING AND MARKINGS SHALL CONFORM TO CALTRANS 2006 STANDARD PLANS AND DETAILS.

PAVEMENT DELINEATION

- INDICATES STRIPING AND PAVEMENT MARKINGS TO BE INSTALLED.
- INDICATES STRIPING AND PAVEMENT MARKINGS TO REMAIN.
- INDICATES STRIPING AND PAVEMENT MARKINGS TO BE REMOVED.

40 0 40 80 120
GRAPHIC SCALE: 1" = 40'

CONSTRUCTION NOTES

- RS REMOVE & SALVAGE EQUIPMENT TO CITY YARD
- E EXISTING EQUIPMENT TO REMAIN
- N 666 INDICATES NEW SIGN(S) AND/OR POST TO BE FURNISHED AND INSTALLED BY CONTRACTOR PER STD. DWG. NO. 666.

ENGINEER IN RESPONSIBLE CHARGE

GILBERT M. HERNANDEZ
R.C.E. No. 69170 expires 6/30/08
DATE 3-7-07

REGISTERED PROFESSIONAL ENGINEER GILBERT M. HERNANDEZ No. 69170 Exp. 06-30-08 CIVIL STATE OF CALIFORNIA

MARK	REVISIONS	APPR.	DATE

DESIGNED BY DMC DRAWN BY DMC CHECKED BY

CITY OF RIVERSIDE, CALIFORNIA
DEPARTMENT OF PUBLIC WORKS

APPROVED BY	BY	DATE
PRINCIPAL ENGINEER		3/8/07
ENGINEERING MANAGER		3/8/07
TRAFFIC DIVISION		3/8/07

APPROVED BY CITY ENGINEER
DATE 3/8/07

STRIPING PLAN
COLUMBIA AVENUE
FROM IOWA AVENUE
TO MICHIGAN AVENUE
SCALE: 1" = 40'

ACCT. NO.
XL-545
SHEET 1 OF 2
FILE NAME: XL545-1.DWG

G:\User\TRAFFIC\XL-DWGS\XL545-1.dwg, 3/7/2007 9:37:14 AM, DChapman

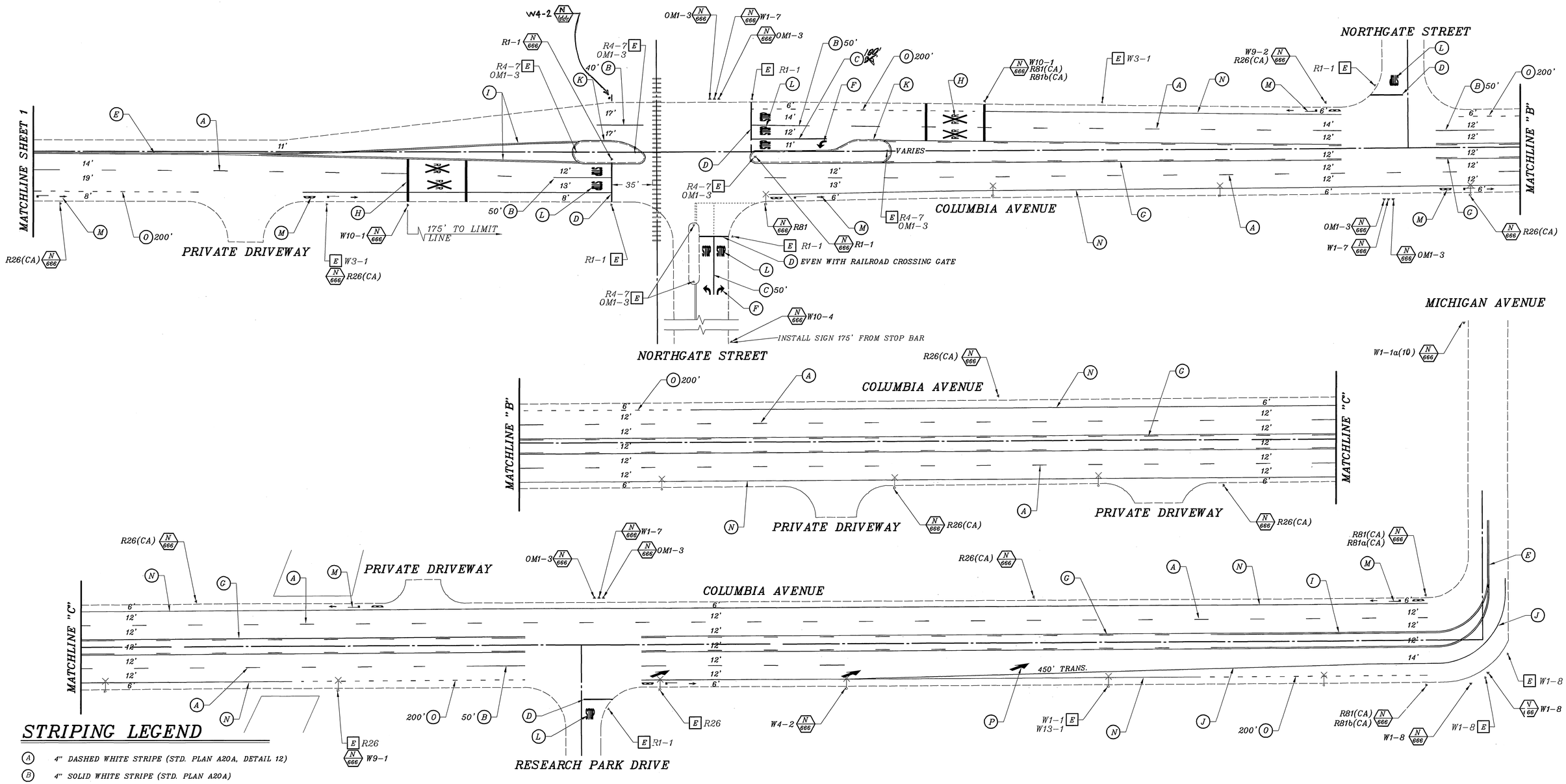

STRIPING LEGEND

- (A) 4" DASHED WHITE STRIPE (STD. PLAN A20A, DETAIL 12)
- (B) 4" SOLID WHITE STRIPE (STD. PLAN A20A)
- (C) 8" SOLID WHITE STRIPE (STD. PLAN A20D, DETAIL 38A)
- (D) 12" SOLID WHITE STRIPE (STD. PLAN A24E)
- (E) DOUBLE YELLOW STRIPE (STD. PLAN A20A, DETAIL 21)
- (F) SOLID WHITE RROW (STD. PLAN A24A, TYPE IV)
- (G) TWO WAY LEFT TURN STRIPE (STD. PLAN A20B, DETAIL 31)
- (H) RAILROAD CROSSING LEGEND (STD. PLAN A24C)
- (I) DOUBLE YELLOW MEDIAN ISLAND STRIPE (STD. PLAN A20B, DETAIL 28)
- (J) RIGHT EDGELINE STRIPE (STD. PLAN A20B, DETAIL 27B)
- (K) LEFT EDGELINE STRIPE (STD. PLAN A20B, DETAIL 24)
- (L) SOLID WHITE "STOP" LEGEND (STD. PLAN A24D)
- (M) SOLID WHITE "BIKE LANE" LEGEND AND ARROW
- (N) SOLID WHITE BIKE LANE STRIPE (STD. PLAN A20D, DETAIL 39)
- (O) DASHED WHITE BIKE LANE STRIPE (STD. PLAN A20D, DETAIL 39A)
- (P) SOLID WHITE LANE DROP ARROW (STD. PLAN A24A, TYPE VI)

40 0 40 80 120

GRAPHIC SCALE: 1" = 40'

PAVEMENT DELINEATION

- INDICATES STRIPING AND PAVEMENT MARKINGS TO BE INSTALLED.
- INDICATES STRIPING AND PAVEMENT MARKINGS TO REMAIN.
- INDICATES STRIPING AND PAVEMENT MARKINGS TO BE REMOVED.

GENERAL NOTES

1. ALL PAVEMENT DELINEATION WORK SHALL BE PERFORMED BY THE CONTRACTOR. REMOVE ALL CONFLICTING STRIPING, LEGENDS AND MARKINGS BY WET SANDBLASTING.
2. ALL STRIPING AND MARKINGS SHALL BE PAINT, APPLIED IN TWO COATS WITH A MINIMUM OF SEVEN DAYS BETWEEN COATS.
3. ALL EXISTING EQUIPMENT THAT IS REMOVED AND SALVAGED SHALL BE RETURNED TO THE CITY OF RIVERSIDE YARD.
4. ALL NEW SIGNAGE SHALL HAVE REFLECTIVE SHEETING (ASTM TYPE 11) AS DIRECTED BY THE ENGINEER.
5. ALL STRIPING AND MARKINGS SHALL CONFORM TO CALTRANS 2006 STANDARD PLANS AND DETAILS.

CONSTRUCTION NOTES

- (E) EXISTING EQUIPMENT TO REMAIN
- (N 666) INDICATES NEW SIGN(S) AND/OR POST TO BE FURNISHED AND INSTALLED BY CONTRACTOR PER STD. DWG. NO. 666.

ENGINEER IN RESPONSIBLE CHARGE

GILBERT M. HERNANDEZ
R.C.E. No. 69170 expires 6-30-08
DATE 3-7-07

REGISTERED PROFESSIONAL ENGINEER — GILBERT M. HERNANDEZ — No. 69170 — Exp. 06-30-08 — CIVIL — STATE OF CALIFORNIA

MARK	REVISIONS	APPR	DATE

DESIGNED BY DMC DRAWN BY DMC CHECKED BY

CITY OF RIVERSIDE, CALIFORNIA
DEPARTMENT OF PUBLIC WORKS

APPROVED BY	BY	DATE
PRINCIPAL ENGINEER		3/8/07
ENGINEERING MANAGER		3/8/07
TRAFFIC DIVISION		3/8/07

APPROVED BY CITY ENGINEER
DATE 3/9/07

STRIPING PLAN

COLUMBIA AVENUE FROM IOWA AVENUE TO MICHIGAN AVENUE

SCALE: 1" = 40'

ACCT. NO.

XL-545

SHEET 2 OF 2

FILE NAME: XL545-2.DWG

G:\Users\TRAFFIC\XL-DWGS\XL545-2.dwg, 3/7/2007 9:37:34 AM, DChapman