TRACT 22275-2

SEWER IMPROVEMENTS

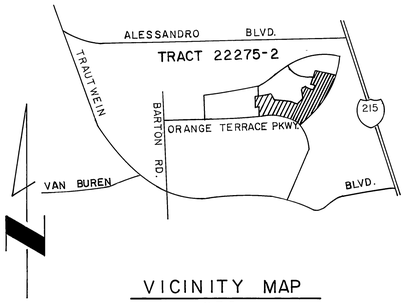

VICINITY MAP
N.T.S.

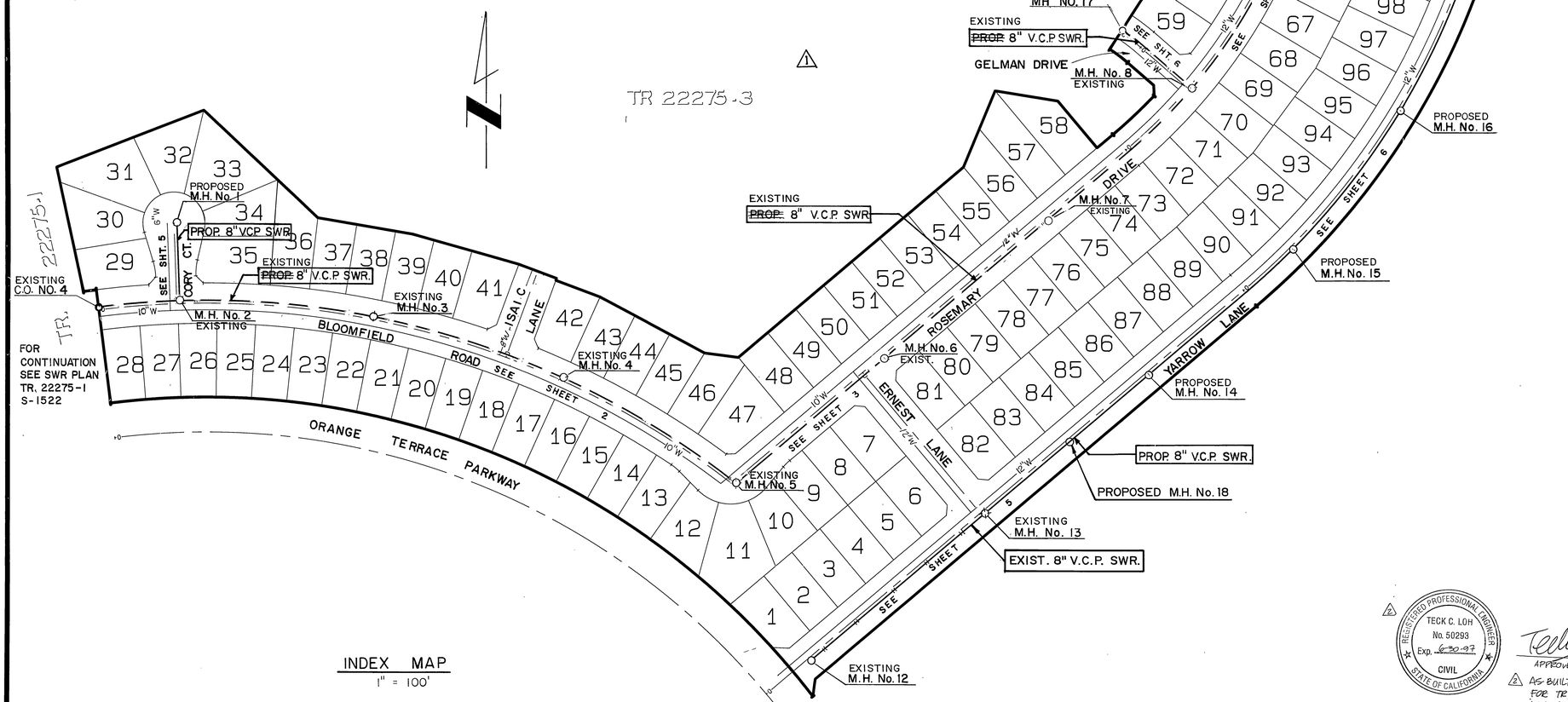

INDEX MAP
1" = 100'

GENERAL NOTES

1. The private engineer signing these plans is responsible for assuring the accuracy and acceptability of the work hereon. In the event of discrepancies arising during construction, the private engineer shall be responsible for determining an acceptable solution and revising the plans for approval by the City.
2. It shall be the responsibility of the contractor to clear the right of way in accordance with the provisions of law as it affects each utility including irrigation lines and appurtenances and at no cost to the City.
3. Construction shall be in accordance with the City of Riverside Dept. of Public Works, Standard Drawings, Std. Dwg. No. 10, and the Standard Specifications for Public Works Construction, Current Edition.
4. Location of laterals to be determined in the field at the direction of the owner. Avoid conflict with proposed and/or existing facilities.
5. Contractor is to verify existing sewer elevation prior to construction.
6. The sewer contractor shall adjust manholes to final grade after paving is completed.
7. No finished floor elevation shall be less than 4' above the sewer flow line at the point of connection without having a proper backwater valve installed in the lateral.
8. A plug wall shall be installed and will remain in place where the new sewer connects with the existing sewer until the new sewer is accepted by the City of Riverside.
9. All manholes to be Riverside City Std. No. 500.
10. All flagged elevations shall be staked in the field by private engineer.
11. The contractor shall call in a locations request to UNDERGROUND SERVICE ALERT (USA), Phone No. 1-800-422-4133, two working days before digging. No construction permit will be issued by the Public Works Department involving excavation for underground facilities unless the applicant has been provided an Inquiry Identification Number by U.S.A.
12. The developer shall be responsible for preserving or re-establishing and referencing survey monuments destroyed, disturbed or buried as a result of construction shown hereon.
13. **Notice to contractor. The existence and location of any underground utility pipes or structures shown on these plans were obtained by a search of the available records. To the best of our knowledge there are no existing utilities except as shown on these plans. The contractor is required to take precautionary measured to protect the utility lines shown and any other lines not of record or not shown on these plans.**
14. Quantities **shown are for information only and the City of Riverside is not responsible for their accuracy.**
15. **All cleanouts to be per City of Riverside std. no, 560**

QUANTITIES

8" V.C.P.	~~5060~~ 1825	L.F.
~~STUBS~~	~~5~~	~~EA~~
MANHOLES	~~517~~ 5	EA.
4" V.C.P. LATERALS	~~3486~~ 61	~~LF~~ EA. △1
~~CLEANOUTS~~	~~4~~	~~EA~~

LEGEND

————	PROPOSED	V.C.P. SEWER
— — —	EXISTING	V.C.P. SEWER
—o—	MANHOLE	

REGISTERED PROFESSIONAL ENGINEER TECK C. LOH No. 50293 Exp. 6-30-97 CIVIL STATE OF CALIFORNIA

△2 AS-BUILT SEWER LATERALS FOR TR22275-2 (SHT 2-6 ONLY)

APPROVED BY 9/27/94 DATE

REVIEWED BY W.M.W.D. △1 TCG 8/4/89
SHEETS 1 THRU 6
SUPERVISING DESIGN ENGINEER RCE 21643 DATE 12/20/88

Underground Service Alert
CALL BEFORE YOU DIG
Call: TOLL FREE
1-800 422-4133
TWO WORKING DAYS BEFORE YOU DIG

PRIVATE ENGINEERING NOTE

CONSTRUCTION CONTRACTOR AGREES THAT IN ACCORDANCE WITH GENERALLY ACCEPTED CONSTRUCTION PRACTICES, CONSTRUCTION CONTRACTOR WILL BE REQUIRED TO ASSUME SOLE AND COMPLETE RESPONSIBILITY FOR JOB SITE CONDITIONS DURING THE COURSE OF CONSTRUCTION OF THE PROJECT, INCLUDING SAFETY OF ALL PERSONS AND PROPERTY, THAT THIS REQUIREMENT SHALL BE MADE TO APPLY CONTINUOUSLY AND NOT BE LIMITED TO NORMAL WORKING HOURS, AND CONSTRUCTION CONTRACTOR FURTHER AGREES TO DEFEND, INDEMNIFY AND HOLD DESIGN PROFESSIONAL HARMLESS FROM ANY AND ALL LIABILITY, REAL OR ALLEGED, IN CONNECTION WITH THE PERFORMANCE OF WORK ON THIS PROJECT, EXCEPTING LIABILITY ARISING FROM THE SOLE NEGLIGENCE OF DESIGN PROFESSIONAL

REGISTERED PROFESSIONAL ENGINEER JOHN W. CANTY No. 17550 Exp. 6/30/89 CIVIL STATE OF CALIFORNIA

PREPARED UNDER THE DIRECTION OF: John W. Canty
REGISTERED CIVIL ENGINEER NO. 17550
EXPIRATION DATE: 6-30-89 DATE: 8/21/88
APPROVED BY:

SCALE: AS SHOWN
DATE: APRIL 1988

J.F. Davidson Associates, Inc.
ENGINEERING PLANNING SURVEYING ARCHITECTURE LANDSCAPE ARCHITECTURE
3880 Lemon Street, Suite 300, P.O. Box 493, Riverside, CA 92502, (714) 686-0844, FAX 714-686-5954
11200 S. Mt. Vernon Ave., Suite "D", Colton, CA 92324, (714) 825-1082
73-080 El Paseo, Suite 106, Palm Desert, CA 92260, (619) 346-5691, FAX 619-346-0529

BENCH MARK: V.B. 10-64 ELEV. 1700.670 DATE: 1971 BRASS DISK FLUSH & MARKED V.B. 10-64, O.6 MI. E. ON VAN BUREN BLVD. FROM CL INT. OF VAN BUREN & WOOD RD. 205' N. OF VAN BUREN & THE N.E. SIDE OF GRANITE BOULDERS, ON TOP OF 3'x15'x18' BOULDER

MARK	REVISIONS	APPR	DATE
△2	AS-BUILT SEWER LATERALS	MW	9/27/94
△1	REVISED TO REFLECT EXIST. CONDITIONS	MW	8/4/89

DESIGNED BY L.W.S. DRAWN BY T.F.E CHECKED BY JAO

CITY OF RIVERSIDE, CALIFORNIA
DEPARTMENT OF PUBLIC WORKS

APPROVED BY	BY	DATE
PRINCIPAL ENGINEER		
PARK DEPARTMENT		
TRAFFIC DIVISION		
CHIEF P. W. ENGR.	LWS	1/6/89

APPROVED BY Barry Foster
DIRECTOR OF PUBLIC WORKS
DATE 1/6/89

TRACT 22275-2
SEWER PLAN & PROFILE
" TITLE SHEET "

FOR: S.I.C.

PROJECT NO. S-1523
SHEET 1 OF 6
FILE NO.: 8710243 (M)

FILED

INDEXED 1-31-89 GH

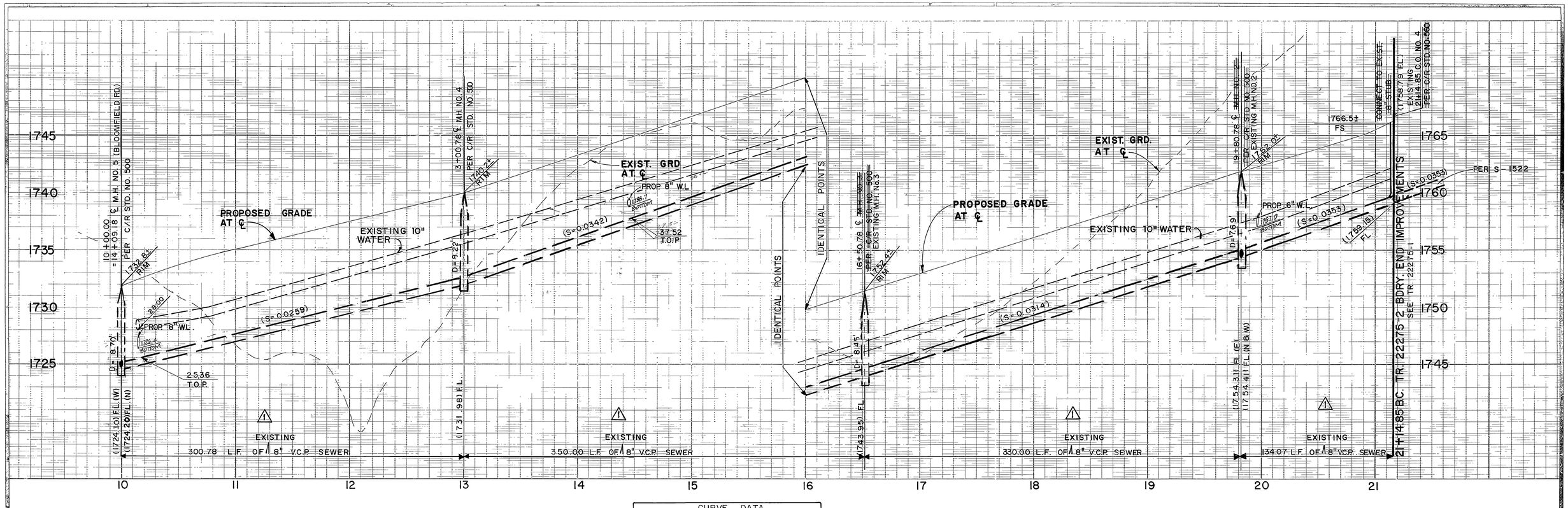

CURVE DATA				
NO	△	R	L	T
①	44° 53' 28"	1410.00'	1104.73'	582.47'
②	45° 08' 32"	1415.00	1114.85'	588.17'
③	12° 10' 44"	1415.00'	300.78'	150.96'
④	14° 10' 20"	1415.00'	350.00'	175.90'
⑤	13° 21' 44"	1415.00'	330.00'	165.75'
⑥	5° 25' 44"	1415.00'	134.07'	67.09'

⚠ **NOTE:** LAY WYES FLAT PER CITY OF RIVERSIDE STD. NO. 562 FOR LOTS 19-28 AND LOTS 35-41

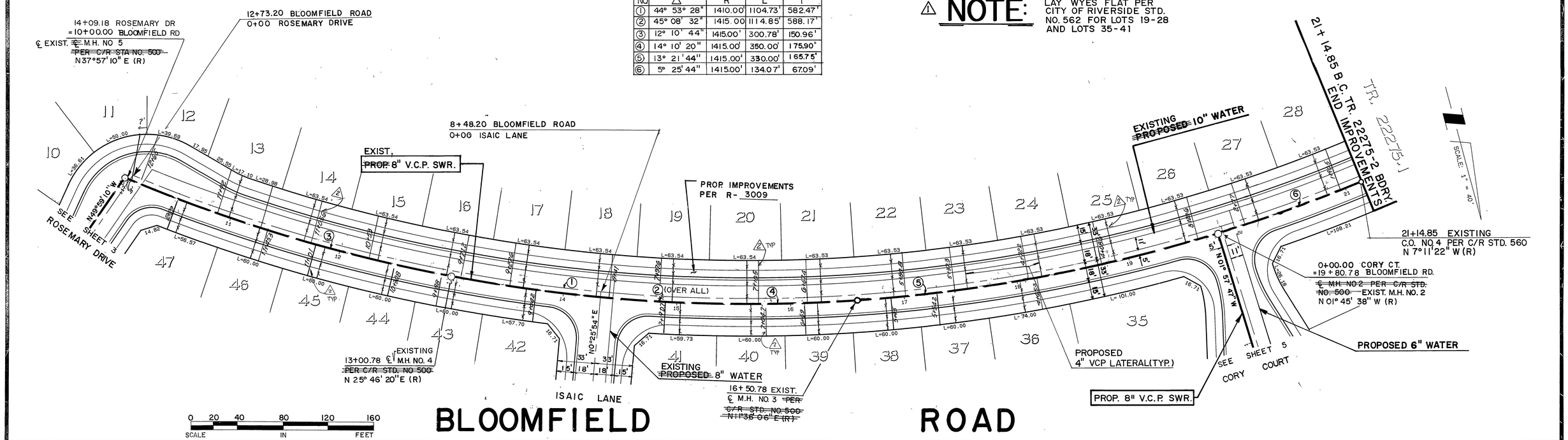

Underground Service Alert
CALL 8 BEFORE YOU DIG
Call: TOLL FREE 1-800 422-4133
TWO WORKING DAYS BEFORE YOU DIG

PRIVATE ENGINEERING NOTE

CONSTRUCTION CONTRACTOR AGREES THAT IN ACCORDANCE WITH GENERALLY ACCEPTED CONSTRUCTION PRACTICES, CONSTRUCTION CONTRACTOR WILL BE REQUIRED TO ASSUME SOLE AND COMPLETE RESPONSIBILITY FOR JOB SITE CONDITIONS DURING THE COURSE OF CONSTRUCTION OF THE PROJECT, INCLUDING SAFETY OF ALL PERSONS AND PROPERTY, THAT THIS REQUIREMENT SHALL BE MADE TO APPLY CONTINUOUSLY AND NOT BE LIMITED TO NORMAL WORKING HOURS, AND CONSTRUCTION CONTRACTOR FURTHER AGREES TO DEFEND, INDEMNIFY AND HOLD DESIGN PROFESSIONAL HARMLESS FROM ANY AND ALL LIABILITY, REAL OR ALLEGED, IN CONNECTION WITH THE PERFORMANCE OF WORK ON THIS PROJECT, EXCEPTING LIABILITY ARISING FROM THE SOLE NEGLIGENCE OF DESIGN PROFESSIONAL

REGISTERED PROFESSIONAL ENGINEER JOHN W. CARTER No. 17550 Exp. 6/30/89 CIVIL STATE OF CALIFORNIA

PREPARED UNDER THE DIRECTION OF: John W. Carter
REGISTERED CIVIL ENGINEER NO. 17550
EXPIRATION DATE: 6-30-89 DATE: 6/2/88
APPROVED BY:

J.F. Davidson Associates, Inc.
ENGINEERING PLANNING SURVEYING ARCHITECTURE LANDSCAPE ARCHITECTURE
3880 Lemon Street, Suite 300, PO Box 493, Riverside, CA 92502, (714) 686-0844, FAX 714-686-5954
11200 S. Mt. Vernon Ave., Suite 2, Colton, CA 92324, (714) 825-1082
73-080 El Paseo, Suite 106, Palm Desert, CA 92260, (619) 346-5691, FAX 619-340-0529

SCALE: 1" = 40'
DATE: MAR 1988
BENCH MARK: V.B. 10-64 ELEV. 1700.670 DATE: 1971 BRASS DISK FLUSH & MARKED V.B. 10-64, 0.6 MI. E. ON VAN BUREN BLVD. FROM CL INT. OF VAN BUREN & WOOD RD. 295± W. OF VAN BUREN & THE N.E. SIDE OF GRANITE BOULDERS, ON TOP OF 3"x18"x18" BOULDER

MARK	REVISIONS	APPR.	DATE
2	AS-BUILT SEWER LATERALS	WL	9/19/89
1	REVISE TO REFLECT EXIST. CONDITIONS	WLE	8/8/89

DESIGNED BY L.W.S. DRAWN BY T.F.E. CHECKED BY J.A.O.

CITY OF RIVERSIDE, CALIFORNIA
DEPARTMENT OF PUBLIC WORKS

APPROVED BY	BY	DATE
PRINCIPAL ENGINEER		
PARK DEPARTMENT		
TRAFFIC DIVISION		
CHIEF P.W. ENGR	WJS	1-5
	WLE	1/3/89

APPROVED BY: Barry Bark
DIRECTOR OF PUBLIC WORKS
DATE 1/6/89

TRACT 22275-2
SEWER PLAN & PROFILE
BLOOMFIELD ROAD
(SEWER EXISTING) ⚠
FOR: S.I.C.

PROJECT NO S-1523
SHEET 2 OF 6
FILE NO.: 8710243 (M)

F2510

INDEXED 1-31-89 GH

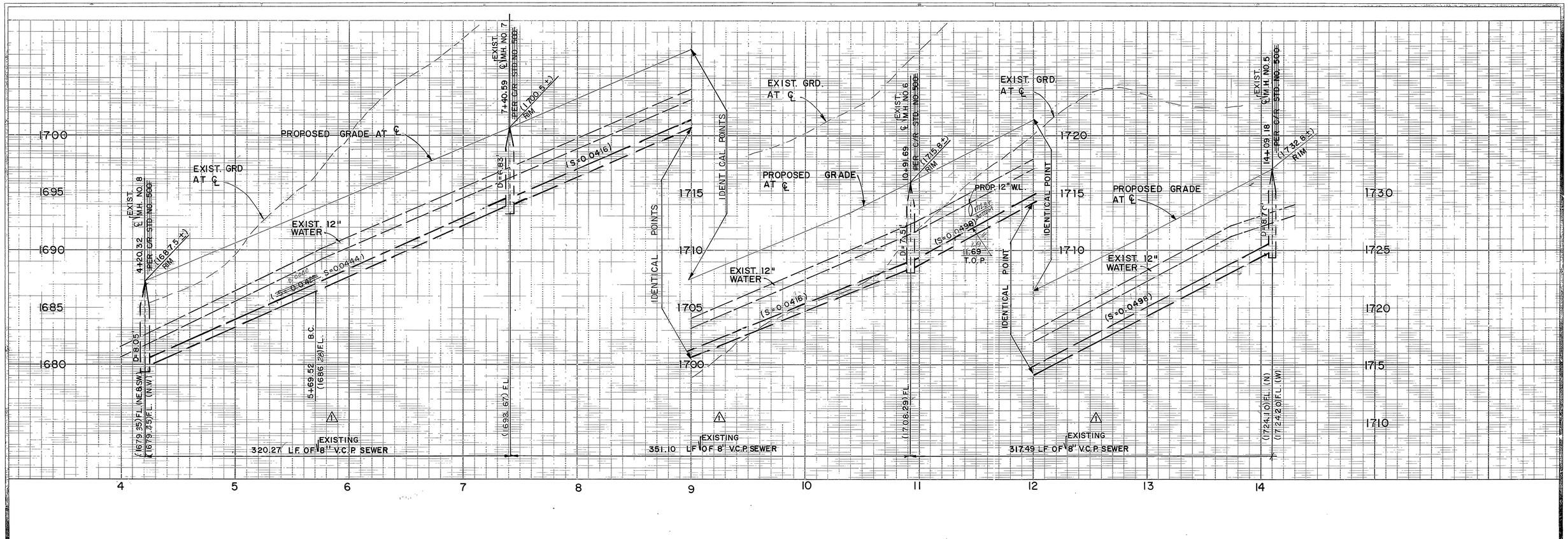

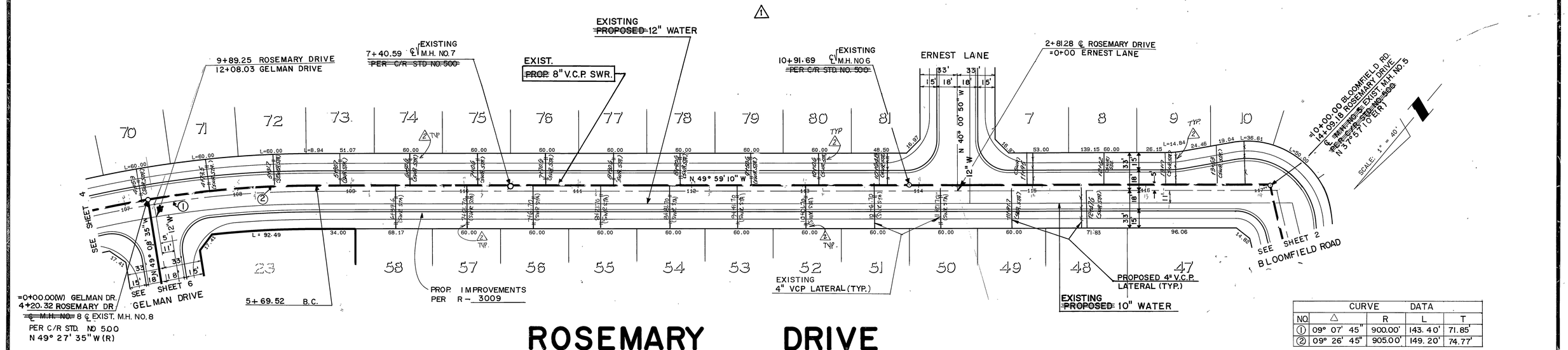

ROSEMARY DRIVE

CURVE DATA				
NO.	△	R	L	T
①	09° 07' 45"	900.00'	143.40'	71.85'
②	09° 26' 45"	905.00'	149.20'	74.77'

0 20 40 80 120 160
SCALE IN FEET

Underground Service Alert
CALL BEFORE YOU DIG
Call: TOLL FREE
1-800
422-4133
TWO WORKING DAYS BEFORE YOU DIG

PRIVATE ENGINEERING NOTE

CONSTRUCTION CONTRACTOR AGREES THAT IN ACCORDANCE WITH GENERALLY ACCEPTED CONSTRUCTION PRACTICES, CONSTRUCTION CONTRACTOR WILL BE REQUIRED TO ASSUME SOLE AND COMPLETE RESPONSIBILITY FOR JOB SITE CONDITIONS DURING THE COURSE OF CONSTRUCTION OF THE PROJECT, INCLUDING SAFETY OF ALL PERSONS AND PROPERTY; THAT THIS REQUIREMENT SHALL BE MADE TO APPLY CONTINUOUSLY AND NOT BE LIMITED TO NORMAL WORKING HOURS, AND CONSTRUCTION CONTRACTOR FURTHER AGREES TO DEFEND, INDEMNIFY AND HOLD DESIGN PROFESSIONAL HARMLESS FROM ANY AND ALL LIABILITY, REAL OR ALLEGED, IN CONNECTION WITH THE PERFORMANCE OF WORK ON THIS PROJECT, EXCEPTING LIABILITY ARISING FROM THE SOLE NEGLIGENCE OF DESIGN PROFESSIONAL.

REGISTERED PROFESSIONAL ENGINEER JOHN W. CANTY No. 17550 Exp. 6/30/89 CIVIL STATE OF CALIFORNIA

PREPARED UNDER THE DIRECTION OF: John W Canty
REGISTERED CIVIL ENGINEER NO. 17550
EXPIRATION DATE: 6-30-89 DATE: 6/2/88
APPROVED BY:

J.F. Davidson Associates, Inc.
ENGINEERING PLANNING SURVEYING ARCHITECTURE LANDSCAPE ARCHITECTURE
3880 Lemon Street, Suite 300, P.O. Box 493, Riverside, CA 92502, (714) 686-0844, FAX 714-686-5954
11200 S Mt Vernon Ave, Suite "D", Colton, CA 92324, (714) 825-1082
73-080 El Paseo, Suite 106, Palm Desert, CA 92260, (619) 346-5691, FAX 619-340-0529

SCALE: 1" = 40'
DATE: MAR 1988
BENCH MARK: V.B. 10-64 ELEV. 1700.670 DATE: 1971 BRASS DISK FLUSH & MARKED V.B. 10-64, 0.6 MI. E. ON VAN BUREN BLVD. FROM CL INT. OF VAN BUREN & WOOD RD., 205' N. OF VAN BUREN @ THE N.E. SIDE OF GRANITE BOULDERS, ON TOP OF 3'x15'x18' BOULDER

MARK	REVISIONS	APPR.	DATE
2	AS-BUILT SEWER LATERALS.	MK	9/19/90
1	REVISE TO REFLECT EXIST. CONDITIONS	WLE	8/8/89

DESIGNED BY L.W.S. DRAWN BY T.F.E CHECKED BY J.A.O

CITY OF RIVERSIDE, CALIFORNIA
DEPARTMENT OF PUBLIC WORKS

APPROVED BY	BY	DATE
PRINCIPAL ENGINEER		
PARK DEPARTMENT		
TRAFFIC DIVISION		
CHIEF P W ENGR.	WLE	1/5/89

APPROVED BY Barry Foster
DIRECTOR OF PUBLIC WORKS
DATE 1/6/89

TRACT 22275-2
SEWER PLAN & PROFILE
ROSEMARY DRIVE
(SEWER EXISTING) 2
FOR: S.I.C.

PROJECT NO. S-1523
SHEET 3 OF 6
FILE NO.: 8710243 (M)

FRBO

INDEXED 1-31-89 GH

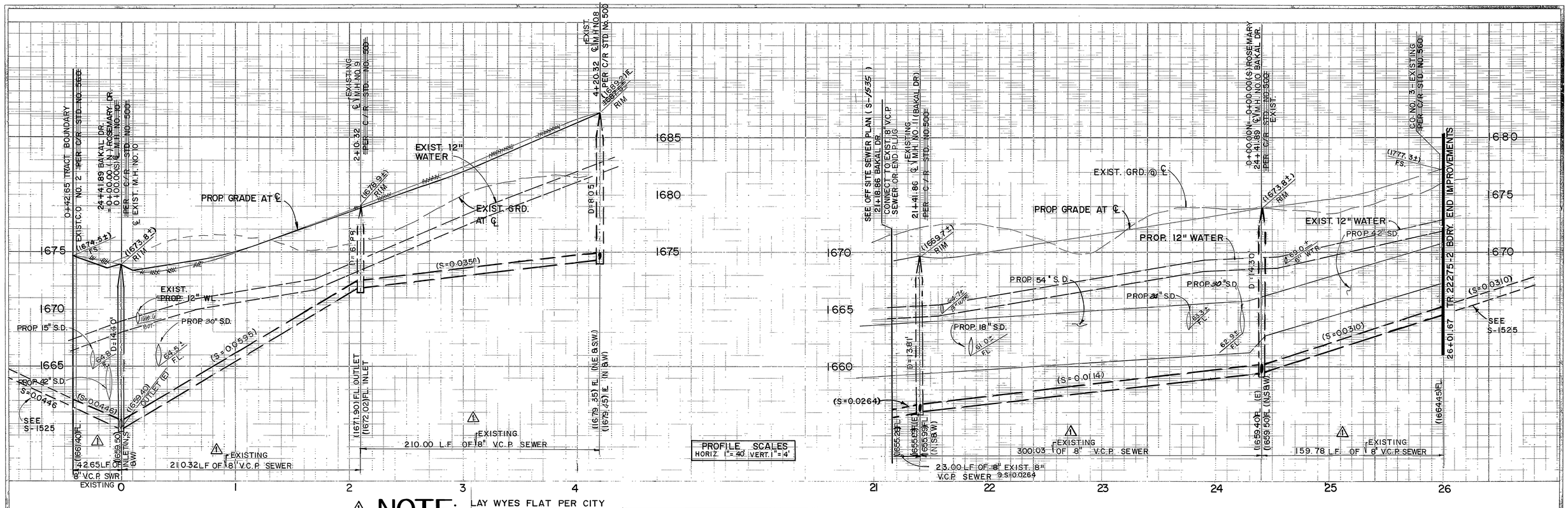

⚠ NOTE: LAY WYES FLAT PER CITY OF RIVERSIDE STD. NO. 56 FOR LOTS 61, 66 & 67.

CURVE DATA				
NO.	Δ	R	L	T
1	26° 36' 37"	900.00'	417.99'	212.84'
2	02° 42' 47"	905.00'	42.65'	21.33'
3	13° 18' 54"	905.00'	210.32'	105.63'
4	13° 17' 43"	905.00'	210.00'	105.47'
5	26° 36' 37"	905.00'	420.32'	214.02'
6	03° 01' 01"	900.00'	47.39'	23.70'

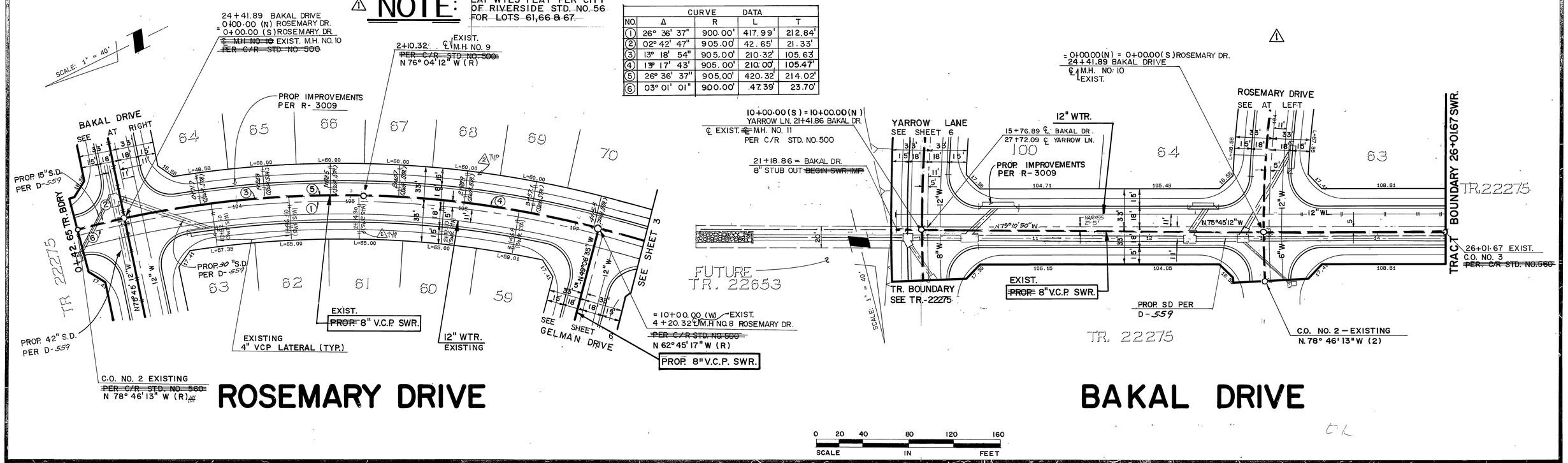

ROSEMARY DRIVE

BAKAL DRIVE

Underground Service Alert
Call: TOLL FREE
1-800 422-4133
TWO WORKING DAYS BEFORE YOU DIG

PRIVATE ENGINEERING NOTE

CONSTRUCTION CONTRACTOR AGREES THAT IN ACCORDANCE WITH GENERALLY ACCEPTED CONSTRUCTION PRACTICES, CONSTRUCTION CONTRACTOR WILL BE REQUIRED TO ASSUME SOLE AND COMPLETE RESPONSIBILITY FOR JOB SITE CONDITIONS DURING THE COURSE OF CONSTRUCTION OF THE PROJECT, INCLUDING SAFETY OF ALL PERSONS AND PROPERTY, THAT THIS REQUIREMENT SHALL BE MADE TO APPLY CONTINUOUSLY AND NOT BE LIMITED TO NORMAL WORKING HOURS, AND CONSTRUCTION CONTRACTOR FURTHER AGREES TO DEFEND, INDEMNIFY AND HOLD DESIGN PROFESSIONAL HARMLESS FROM ANY AND ALL LIABILITY, REAL OR ALLEGED, IN CONNECTION WITH THE PERFORMANCE OF WORK ON THIS PROJECT, EXCEPTING LIABILITY ARISING FROM THE SOLE NEGLIGENCE OF DESIGN PROFESSIONAL.

REGISTERED PROFESSIONAL ENGINEER JOHN W. CARTY No. 17550 Exp. 6/30/89 CIVIL STATE OF CALIFORNIA

PREPARED UNDER THE DIRECTION OF: John W. Carty
REGISTERED CIVIL ENGINEER NO. 17550
EXPIRATION DATE: 6-30-89 DATE: 6/2/88
APPROVED BY:

SCALE: 1" = 40'
DATE: MAR 1988

BENCH MARK: V.B. 10-64 ELEV. 1700.670 DATE: 1971 BRASS DISK FLUSH & MARKED V.B. 10-64, 0.6' NE' E. ON VAN BUREN BLVD. FROM CL INT. OF VAN BUREN & WOOD RD.; 205' N. OF VAN BUREN & THE N.E. SIDE OF GRANITE BOULDERS, ON TOP OF 3'x15'x49' BOULDER

J.F. Davidson Associates, Inc.
ENGINEERING PLANNING SURVEYING ARCHITECTURE LANDSCAPE ARCHITECTURE
3880 Lemon Street, Suite 300, P.O. Box 493, Riverside, CA 92502, (714) 686-5844, FAX 714-686-5954
11200 S. Mt. Vernon Ave., Suite "D", Colton, CA 92324, (714) 825-1082
73-080 El Paseo, Suite 106, Palm Desert, CA 92260, (619) 346-5691, FAX 619-340-0529

MARK	REVISIONS	APPR.	DATE
2	AS-BUILT SEWER LATERALS	MC	8/19/94
1	REVISE TO REFLECT EXIST. CONDITIONS	WJE	8/4/93

DESIGNED BY L.W.S. DRAWN BY T.F.E. CHECKED BY J.A.O.

CITY OF RIVERSIDE, CALIFORNIA
DEPARTMENT OF PUBLIC WORKS

APPROVED BY	BY	DATE
PRINCIPAL ENGINEER		
PARK DEPARTMENT		
TRAFFIC DIVISION		
CHIEF P W ENGR	WJE	1-5
	WJE	1/5/89

APPROVED BY: Barry Beck
DIRECTOR OF PUBLIC WORKS
DATE 1/6/89

TRACT 22275-2
SEWER PLAN & PROFILE
ROSEMARY DRIVE
BAKAL DRIVE (SEWER EXISTING) ⚠

FOR: S.I.C.

PROJECT NO. S-1523
SHEET 4 OF 6
FILE NO 8710243 (M)

FREO

INDEXED 1-31-89

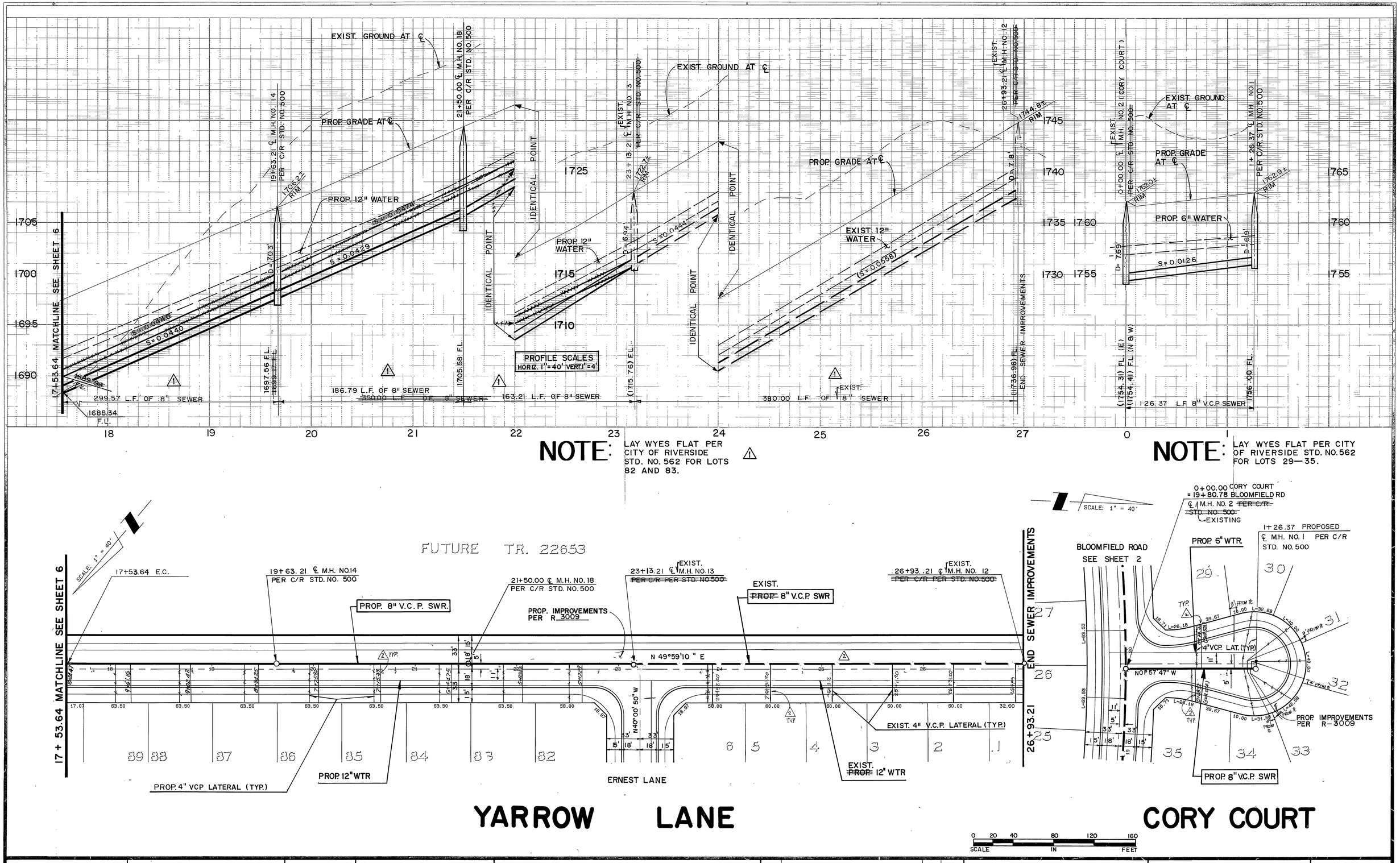

NOTE: LAY WYES FLAT PER CITY OF RIVERSIDE STD. NO. 562 FOR LOTS 82 AND 83. △1

NOTE: LAY WYES FLAT PER CITY OF RIVERSIDE STD. NO. 562 FOR LOTS 29—35.

YARROW LANE

CORY COURT

0 20 40 80 120 160
SCALE IN FEET

Underground Service Alert
DIG BEFORE YOU DIG
Call: TOLL FREE 1-800 422-4133
TWO WORKING DAYS BEFORE YOU DIG

PRIVATE ENGINEERING NOTE

CONSTRUCTION CONTRACTOR AGREES THAT IN ACCORDANCE WITH GENERALLY ACCEPTED CONSTRUCTION PRACTICES, CONSTRUCTION CONTRACTOR WILL BE REQUIRED TO ASSUME SOLE AND COMPLETE RESPONSIBILITY FOR JOB SITE CONDITIONS DURING THE COURSE OF CONSTRUCTION OF THE PROJECT, INCLUDING SAFETY OF ALL PERSONS AND PROPERTY, THAT THIS REQUIREMENT SHALL BE MADE TO APPLY CONTINUOUSLY AND NOT BE LIMITED TO NORMAL WORKING HOURS, AND CONSTRUCTION CONTRACTOR FURTHER AGREES TO DEFEND, INDEMNIFY AND HOLD DESIGN PROFESSIONAL HARMLESS FROM ANY AND ALL LIABILITY, REAL OR ALLEGED, IN CONNECTION WITH THE PERFORMANCE OF WORK ON THIS PROJECT, EXCEPTING LIABILITY ARISING FROM THE SOLE NEGLIGENCE OF DESIGN PROFESSIONAL.

REGISTERED PROFESSIONAL ENGINEER JOHN W. CARTY No. 17550 Exp. 6/30/89 CIVIL STATE OF CALIFORNIA

PREPARED UNDER THE DIRECTION OF: John W. Carty
REGISTERED CIVIL ENGINEER NO. 17550
EXPIRATION DATE: 6-30-89 DATE: 6/2/88
APPROVED BY:

SCALE: 1" = 40'
DATE: MAR 1988

J.F. Davidson Associates, Inc.
ENGINEERING PLANNING SURVEYING ARCHITECTURE LANDSCAPE ARCHITECTURE
3880 Lemon Street, Suite 300, P.O. Box 493, Riverside, CA 92502, (714) 686-0844, FAX 714-686-5954
11200 S. Mt Vernon Ave., Suite "D", Colton, CA 92324, (714) 825-1082
73-080 El Paseo, Suite 106, Palm Desert, CA 92260, (619) 346-5691, FAX 619-340-0529

BENCH MARK. V.B. 10-64 ELEV. 1700.670 DATE: 1971 BRASS DISK FLUSH & MARKED V.B. 10-64, O.B MT. E. ON VAN BUREN BLVD. FROM CL INT. OF VAN BUREN & WOOD RD. 205' N. OF VAN BUREN & THE N.E. SIDE OF GRANITE BOULDERS, ON TOP OF 3"x15"x18" BOULDER

MARK	REVISIONS	APPR.	DATE
2	AS-BUILT SEWER LATERALS		
1	REVISE TO REFLECT EXIST. CONDITIONS		

DESIGNED BY L.W.S. DRAWN BY TFE CHECKED BY J.A.O.

CITY OF RIVERSIDE, CALIFORNIA
DEPARTMENT OF PUBLIC WORKS

APPROVED BY	BY	DATE
PRINCIPAL ENGINEER		
PARK DEPARTMENT		
TRAFFIC DIVISION		
CHIEF P.W. ENGR		

APPROVED BY: DIRECTOR OF PUBLIC WORKS
DATE 1/6/89

TRACT 22275-2
SEWER PLAN & PROFILE
YARROW LANE
CORY COURT

FOR: S.I.C.

PROJECT NO. S-1523
SHEET 5 OF 6
FILE NO.: 8710243 (M)

INDEXED 1-31-89 GH

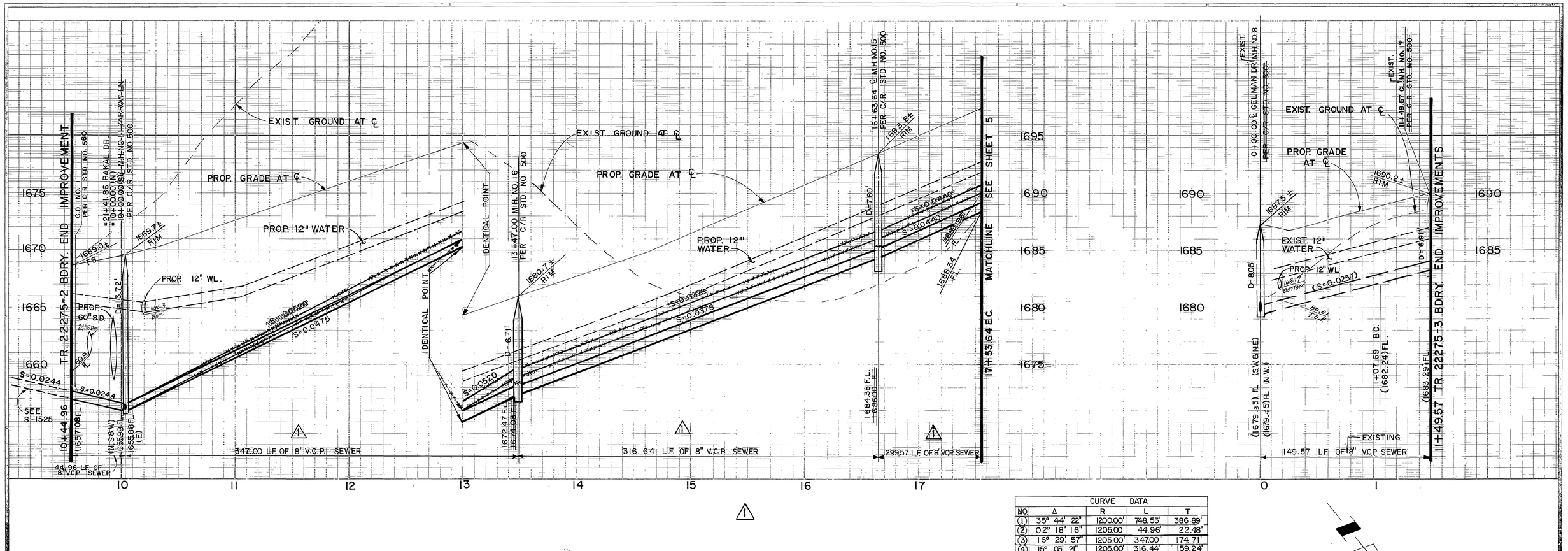

CURVE DATA				
NO.	Δ	R	L	T
(1)	35° 44' 22"	1200.00'	748.53'	386.89'
(2)	02° 18' 16"	1205.00	44.96'	22.48'
(3)	16° 29' 57"	1205.00'	347.00'	174.71'
(4)	15° 03' 21"	1205.00'	316.44'	159.24'
(5)	03° 57' 49"	1205.00'	83.36'	41.70'
(6)	07° 52' 05"	300.00	41.20'	20.63'
(7)	07° 52' 05"	305.00'	44.88'	20.97'
(8)	02° 13' 58"	1200.00'	46.77'	23.38'

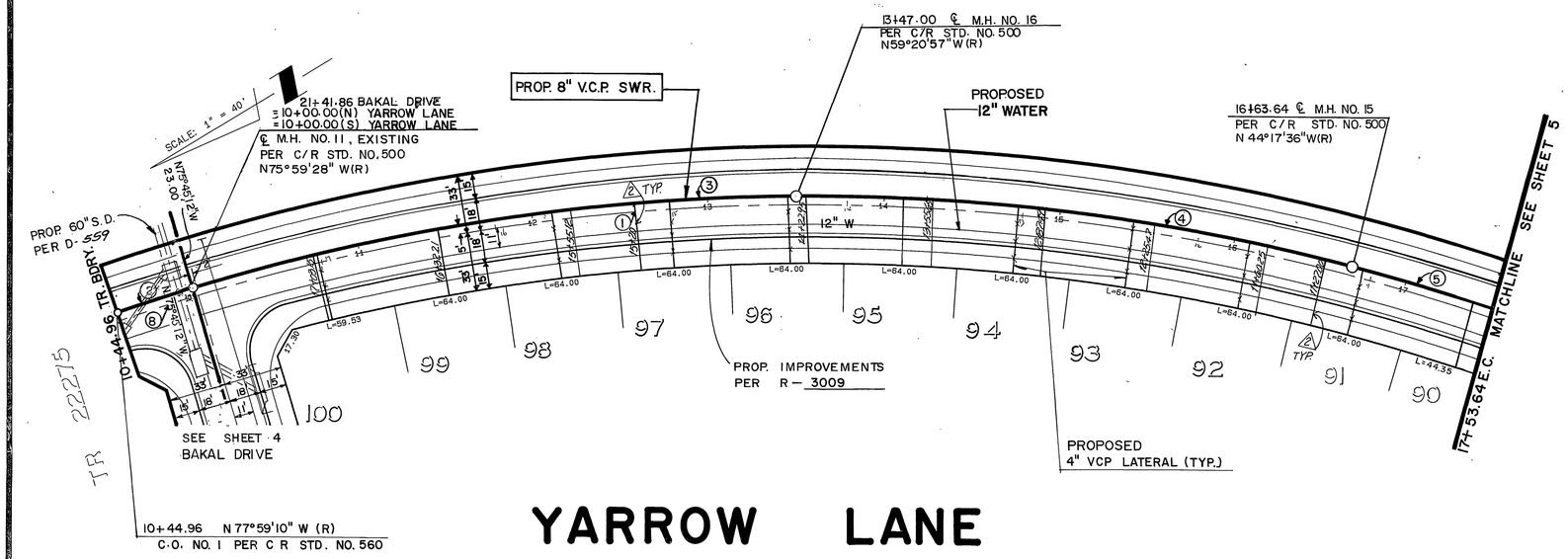

YARROW LANE

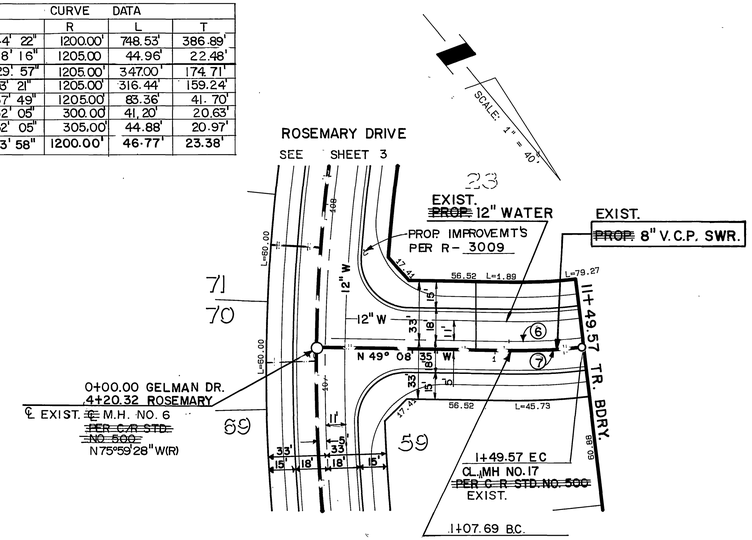

GELMAN DRIVE

0 20 40 80 120 160
SCALE IN FEET

Underground Service Alert
CALL BEFORE YOU DIG
Call: TOLL FREE
1-800 422-4133
TWO WORKING DAYS BEFORE YOU DIG

PRIVATE ENGINEERING NOTE

CONSTRUCTION CONTRACTUR AGREES THAT IN ACCORDANCE WITH GENERALLY ACCEPTED CONSTRUCTION PRACTICES, CONSTRUCTION CONTRACTOR WILL BE REQUIRED TO ASSUME SOLE AND COMPLETE RESPONSIBILITY FOR JOB SITE CONDITIONS DURING THE COURSE OF CONSTRUCTION OF THE PROJECT, INCLUDING SAFETY OF ALL PERSONS AND PROPERTY, THAT THIS REQUIREMENT SHALL BE MADE TO APPLY CONTINUOUSLY AND NOT BE LIMITED TO NORMAL WORKING HOURS, AND CONSTRUCTION CONTRACTOR FURTHER AGREES TO DEFEND, INDEMNIFY AND HOLD DESIGN PROFESSIONAL HARMLESS FROM ANY AND ALL LIABILITY, REAL OR ALLEGED, IN CONNECTION WITH THE PERFORMANCE OF WORK ON THIS PROJECT, EXCEPTING LIABILITY ARISING FROM THE SOLE NEGLIGENCE OF DESIGN PROFESSIONAL.

REGISTERED PROFESSIONAL ENGINEER JOHN W. CANTY No. 17550 Exp. 6/30/89 CIVIL STATE OF CALIFORNIA

PREPARED UNDER THE DIRECTION OF: John W. Canty
REGISTERED CIVIL ENGINEER NO. 17550
EXPIRATION DATE: 6-30-89 DATE: 6/2/88
APPROVED BY:

J.F. Davidson Associates, Inc.
ENGINEERING PLANNING SURVEYING ARCHITECTURE LANDSCAPE ARCHITECTURE
3880 Lemon Street, Suite 300, PO Box 453, Riverside, CA 92502, (714) 686-0844, FAX 714-686-5954
11200 S. Mt. Vernon Ave., Suite "D", Colton, CA 92324, (714) 825-1082
73-080 El Paseo, Suite 106, Palm Desert, CA 92260, (619) 346-5691, FAX 619-340-0529

SCALE: 1" = 40'
DATE: MAR 1988
BENCH MARK: V.B. 10-64 ELEV. 1700.670 DATE: 1971 BRASS DISK FLUSH & MARKED V.B. 10-64, 0.6 MI. E. ON VAN BUREN BLVD. FROM CL INT. OF VAN BUREN & WOOD RD., 205' N. OF VAN BUREN & THE N.E. SIDE OF GRANITE BOULDERS, ON TOP OF 3'x15'x19' BOULDER

MARK	REVISIONS	APPR.	DATE
2	AS-BUILT SEWER LATERALS.		11/12/91
1	REVISE TO REFLECT EXIST. CONDITION		10/18/91

DESIGNED BY LWS DRAWN BY TFE CHECKED BY JAO

CITY OF RIVERSIDE, CALIFORNIA
DEPARTMENT OF PUBLIC WORKS

APPROVED BY	BY	DATE
PRINCIPAL ENGINEER		
PARK DEPARTMENT		
TRAFFIC DIVISION		
CHIEF P W ENGR.		

APPROVED BY: Barry Foster
DIRECTOR OF PUBLIC WORKS
DATE 1/6/89

TRACT 22275-2
SEWER PLAN & PROFILE
YARROW LANE
GELMAN DRIVE

FOR: S.I.C.

PROJECT NO. S-1523
SHEET 6 OF 6
FILE NO. 8710243 (M)

INDEXED 1-31-89 JH