FORCE SEWER MAIN IMPROVEMENT PLANS FOR:
TRACT No. 29515

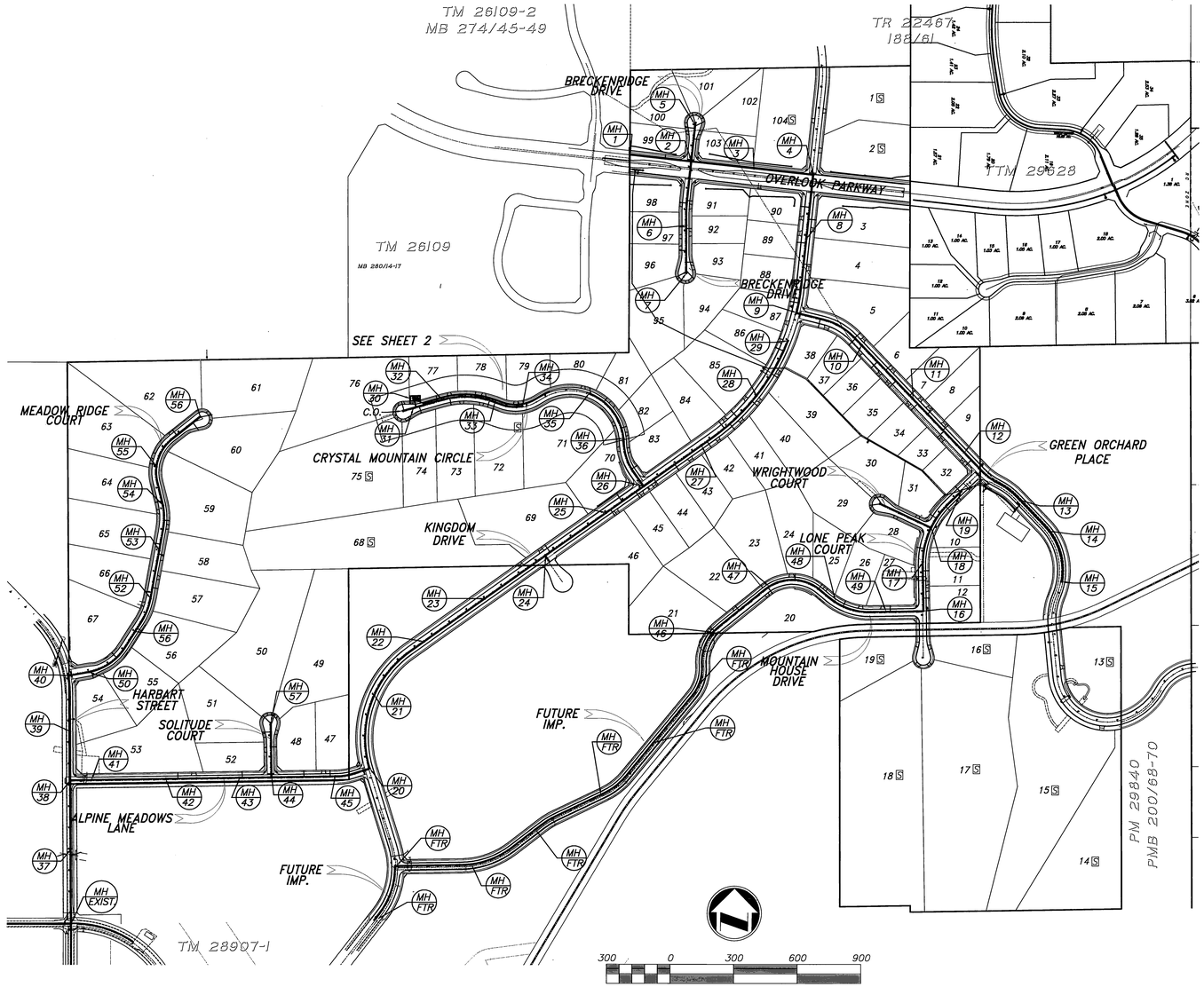

GENERAL NOTES

1. NO PERSON SHALL PERFORM ANY CONSTRUCTION ACTIVITY OR INSTALL ANY OBJECTS WITHIN THE PUBLIC RIGHT-OF-WAY OR EASEMENTS OF THE CITY OF RIVERSIDE WITHOUT A VALID CONSTRUCTION PERMIT OR, A STREET OPENING PERMIT OR AN ENCROACHMENT PERMIT ISSUED BY THE CITY'S PUBLIC WORKS DEPARTMENT.
2. IT SHALL BE THE RESPONSIBILITY OF THE CONTRACTOR TO CLEAR THE RIGHT OF WAY IN ACCORDANCE WITH THE PROVISIONS OF LAW AS IT AFFECTS EACH UTILITY INCLUDING IRRIGATION LINES AND APPURTENANCES AND AT NO COST TO THE CITY.
3. CONSTRUCTION SHALL BE IN ACCORDANCE WITH THE CITY OF RIVERSIDE DEPARTMENT OF PUBLIC WORKS, STANDARD DRAWINGS, ITS SUPPLEMENTAL NOTES AND THE STANDARD SPECIFICATIONS FOR PUBLIC WORKS CONSTRUCTION, CURRENT EDITION.
4. THE PRIVATE ENGINEER SIGNING THESE PLANS IS RESPONSIBLE FOR ASSURING THE ACCURACY AND ACCEPTABILITY OF THE WORK HEREON. IN THE EVENT OF DISCREPANCIES ARISING DURING CONSTRUCTION, THE PRIVATE ENGINEER SHALL BE RESPONSIBLE FOR DETERMINING AN ACCEPTABLE SOLUTION AND REVISING THE PLANS FOR APPROVAL BY THE CITY.
5. QUANTITIES SHOWN ARE FOR INFORMATION ONLY AND THE CITY OF RIVERSIDE IS NOT RESPONSIBLE FOR THEIR ACCURACY.
6. THE DEVELOPER SHALL BE RESPONSIBLE FOR PRESERVING OR RE-ESTABLISHING AND REFERENCING SURVEY MONUMENTS DESTROYED, DISTURBED OR BURIED AS A RESULT OF CONSTRUCTION SHOWN HEREON.
7. ALL FLAGGED ELEVATIONS SHALL BE STAKED IN THE FIELD BY THE PRIVATE ENGINEER.
8. THE CONTRACTOR SHALL CALL IN A LOCATION REQUEST TO UNDERGROUND SERVICE ALERT (USA), PHONE # 1-800-227-2600, TWO WORKING DAYS BEFORE DIGGING. NO CONSTRUCTION PERMIT WILL BE ISSUED BY THE PUBLIC WORKS DEPARTMENT INVOLVING EXCAVATION FOR UNDERGROUND FACILITIES UNLESS THE APPLICANT HAS BEEN PROVIDED AN INQUIRY IDENTIFICATION NUMBER BY U.S.A.
9. CONTRACTOR IS TO VERIFY EXISTING SEWER ELEVATION PRIOR TO CONSTRUCTION.
10. LOCATION OF LATERALS TO BE DETERMINED IN THE FIELD AT THE DIRECTION OF THE OWNER. AVOID CONFLICT WITH PROPOSED AND/OR EXISTING FACILITIES.
11. NO FINISHED FLOOR ELEVATION SHALL BE LESS THAN 6" ABOVE THE UPPER MANHOLE RIM ELEVATION OF THE SEWER LINE SEGMENT BEING CONNECTED TO, WITHOUT HAVING A PROPER BACKWATER VALVE INSTALLED IN THE LATERAL.
12. A PLUG SHALL BE INSTALLED AND WILL REMAIN IN PLACE WHERE THE NEW SEWER CONNECTS WITH THE EXISTING SEWER UNTIL THE NEW SEWER IS ACCEPTED BY THE CITY.
13. THE SEWER CONTRACTOR SHALL ADJUST MANHOLES TO FINAL GRADE AFTER PAVING IS COMPLETED.

SEWAGE SPILL CONTAINMENT PLAN

CHAPTER 14.12.295 OF THE RIVERSIDE MUNICIPAL CODE PROHIBITS THE DISCHARGE OF ANY POLLUTANT TO A STORM DRAIN OR ANY SURFACE, PIPE, OR WATERWAY LEADING TO A STORM DRAIN. THE CONTRACTOR SHALL PREPARE AND SUBMIT TO THE INSPECTOR FOR REVIEW A SEWAGE SPILL CONTAINMENT PLAN. NO WORK WILL BE PERMITTED ON THE EXISTING SEWER SYSTEM UNTIL THE REVIEW IS COMPLETED. A COPY OF THE PLAN SHALL BE KEPT ON THE PROJECT SITE DURING CONSTRUCTION. THIS PLAN SHALL DESCRIBE THE METHODS TO BE USED TO PREVENT OR CONTAIN SEWAGE SPILLS. AT A MINIMUM, THE PLAN SHALL PROVIDE:

A SCALED DRAWING SHOWING ANY PROPOSED EMERGENCY CONTAINMENT AREA(S) AND THE METHODS USED TO CONSTRUCT THEM. THIS PLAN SHALL ALSO SHOW ANY STORM DRAIN INLETS THAT COULD BE AFFECTED BY AN ACCIDENTAL SPILL AND METHODS TO BE USED TO PREVENT THE INLETS FROM ACCEPTING ANY SEWAGE. IN ADDITION, SHOW THE CONTROLS TO BE USED TO LIMIT ACCESS TO THE SPILL AREA BY THE PUBLIC.

DESCRIBE THE METHODS TO BE USED FOR REMOVING SEWAGE AND CLEANING OF THE STORM DRAIN INLETS, STORM DRAINS, CANALS, AND ARROYOS. THIS DESCRIPTION SHALL INCLUDE METHODS FOR SOLIDS REMOVAL.

DESCRIBING DISINFECTING AND DISINFECTION CLEAN UP METHODS. THESE METHODS SHALL SHOW HOW DISINFECTING MATERIALS WILL BE PREVENTED FROM ENTERING STORM DRAINS, CANALS, AND ARROYOS.

A SCALED DRAWING(S) SHOWING ANY PROPOSED SEWAGE BY-PASS PIPES. THIS DRAWING SHALL INDICATE ANY SEWER MANHOLES PROPOSED TO BE PLUGGED AND THE DAY AND TIME OF DAY THIS OPERATION WILL OCCUR.

THE SIZE AND MATERIAL OF ANY BY-PASS PIPES.

THE METHODS TO BE USED TO CONNECT THE BY-PASS PIPE(S) TO THE EXISTING SEWER SYSTEM.

IF PUMPING IS PROPOSED, DESCRIBE THE NUMBER AND CAPACITY OF THE PUMPS. EACH PUMP, AT A MINIMUM, MUST BE CAPABLE OF PASSING A 3-INCH DIAMETER SOLID.

IF STORAGE IS PROPOSED, PROVIDE THE METHODS TO BE USED FOR THE SEWAGE STORAGE AND REMOVAL FROM THE SITE. IF A TRUCK WITH A STORAGE TANK IS TO BE USED, PROVIDE THE CAPACITY OF THE TANK. IF A WATER TRUCK IS PROPOSED FOR THIS PURPOSE, IT MUST BE DEDICATED ONLY FOR THIS OPERATION.

IN THE EVENT OF A SPILL, THE CONTRACTOR SHALL CONTACT THE ENGINEER AND FIELD MAINTENANCE TECHNICIAN, CELL 951-906-9066 (IF NOT AVAILABLE CONTACT THE WASTE WATER TREATMENT PLANT AT 951-351-6140.) THE CONTRACTOR SHALL DOCUMENT THE SPILL BY PHOTOGRAPHING ITS EXTENT. THESE PHOTOGRAPHS SHALL BE SUBMITTED TO THE CITY FOR INCLUSION IN THE SPILL REPORT.

SEWER CONSTRUCTION GENERAL NOTES

1. CONTRACTOR IS TO VERIFY EXISTING SEWER ELEVATION PRIOR TO CONSTRUCTION
2. LOCATION OF LATERALS TO BE DETERMINED IN THE FIELD AT THE DIRECTION OF THE OWNER. AVOID CONFLICT WITH PROPOSED AND/OR EXISTING FACILITIES.
3. NO FINISHED FLOOR ELEVATIONS SHALL BE LESS THAN 6" ABOVE THE UPPER MANHOLE RIM ELEVATION OF THE SEWER LINE SEGMENT BEING CONNECTED TO, WITHOUT HAVING A PROPER BACKWATER VALVE INSTALLED IN THE LATERAL.
4. A PLUG SHALL BE INSTALLED AND WILL REMAIN IN PLACE WHERE THE NEW SEWER CONNECTS WITH THE EXISTING SEWER UNTIL THE NEW SEWER IS ACCEPTED BY THE CITY.
5. THE SEWER CONTRACTOR SHALL ADJUST MANHOLES TO FINAL GRADE AFTER PAVING IS COMPLETED.
6. IT SHALL BE THE RESPONSIBILITY OF THE CONTRACTOR TO CLEAR THE RIGHT OF WAY IN ACCORDANCE WITH THE PROVISIONS OF LAW AS IT AFFECTS EACH UTILITY INCLUDING IRRIGATION LINES AND APPURTANCES AND AT NO COST TO THE CITY.
7. CONSTRUCTION SHALL BE IN ACCORDANCE WITH THE CITY OF RIVERSIDE DEPARTMENT OF PUBLIC WORKS, STANDARD DRAWINGS, ITS SUPPLEMENTAL NOTES AND THE STANDARD SPECIFICATIONS FOR PUBLIC WORKS CONSTRUCTION, CURRENT EDDITION.
8. THE PRIVATE ENGINEER SIGNING THESE PLANS IS RESPONSIBLE FOR ASSURING THE ACCURACY AND ACCEPTABILITY OF THE WORK HEREON. IN THE EVENT OF DISCREPANCIES ARISING DURING CONSTRUCTION, THE PRIVATE ENGINEER SHALL BE RESPONSIBLE FOR DETERMINING AN ACCEPTABLE SOLUTION AND REVISING THE PLANS FOR APPROVAL BY THE CITY.
9. THE DEVELOPER SHALL BE RESPONSIBLE FOR PRESERVING OR RE-ESTABLISHING AND REFERENCING SURVEY MONUMENTS DESTROYED, DISTURBED OR BURIED AS A RESULT OF CONSTRUCTION SHOWN HEREON.
10. ALL FLAGGED ELEVATIONS SHALL BE STAKED IN THE FIELD BY THE PRIVATE ENGINEER.
11. QUANTITIES SHOWN ARE FOR INFORMATION ONLY AND THE CITY OF RIVERSIDE IS NOT RESPONSIBLE FOR THEIR ACCURACY.
12. THE CONTRACTOR SHALL CALL IN A LOCATION REQUEST TO UNDERGROUND SERVICE ALERT (USA), PHONE NUMBER 1-800-227-2600, TWO WORKING DAYS BEFORE DIGGING. NO CONSTRUCTION PERMIT WILL BE ISSUED BY THE PUBLIC WORKS DEPARTMENT INVOLVING EXCAVATION FOR UNDERGROUND FACILITIES UNLESS THE APPLICANT HAS BEEN PROVIDED AN INQUIRY IDENTIFICATION NUMBER BY USA.
13. NO PERSON SHALL PERFORM ANY CONSTRUCTION ACTIVITY OR INSTALL ANY OBJECTS WITHIN THE PUBLIC RIGHTS-OF-WAY OR EASEMENTS OF THE CITY OF RIVERSIDE WITHOUT A VALID CONSTRUCTION PERMIT OR A STREET OPENING PERMIT OR AN ENCROACHMENT PERMIT ISSUED BY THE CITY'S PUBLIC WORKS DEPARTMENT.

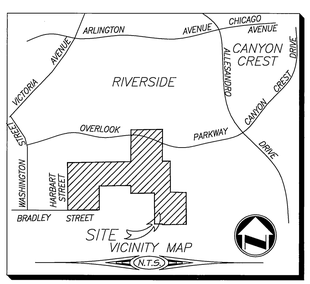

LENGEND

℄	CENTERLINE
R/W	RIGHT OF WAY
MH	MANHOLE
FM	FORCE MAIN
S	SEPTIC

CONSTRUCTION NOTES + QUANITY

1	CONSTRUCT 4" DIA. P.V.C. SEWER FORCE MAIN, SCH 80 CONFORMING TO AWWA C900, PER CITY OF RIVERSIDE STD., CASE II BEDDING	878	LF
2	CONSTRUCT MANHOLE PER C/RIV. STD. DWG. 500	1	EA
3	CONSTRUCT PRECAST CONCRETE FORCE MAIN CLEANOUT PER CITY OF RIVERSIDE STANDARD DRAWING NO. 559 (4" PIPE)	1	EA
4	CONSTRUCT UNDER SIDEWALK DRAIN PER CITY OF RIVERSIDE STANDARD DRAWING NO. 411, W=3.0'	2	EA
5	CONSTRUCT DRIVEWAY APPROACH PER CITY OF RIVERSIDE STANDARD DRAWING NO. 302, W=10.0'	1	EA

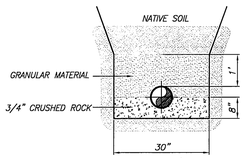

CASE II BEDDING PER CITY OF RIVERSIDE STD. 452
NOT TO SCALE

REGISTERED PROFESSIONAL ENGINEER CHARISSA J.A. LEACH NO. 53390 EXP. 6-30-07 CIVIL STATE OF CALIFORNIA

Underground Service Alert
Call: TOLL FREE
1-800 227-2600
TWO WORKING DAYS BEFORE YOU DIG

CITY OF RIVERSIDE BUSINESS TAX ACCT.#058833 EXP.1/1/07

PLANS PREPARED BY:
adkan ENGINEERS
CIVIL ENGINEERING • SURVEYING • PLANNING
6820 AIRPORT DRIVE, RIVERSIDE, CA-92504
TEL: (951) 688-0241 FAX: (951) 688-2599
DATE: 2/14/06
UNDER THE SUPERVISION OF: R.C.E. 53390 6/30/07

BENCHMARK: F7 - K3
CITY OF RIVERSIDE REFERENCE LL47/7.
PK NAIL AND CITY ENGINEER TAG IN THE BASE OF A STREET LIGHT ALONG THE SOUTHERLY CURB OF OVERLOOK PARKWAY 175 FEET EAST OF CHATEAU RIDGE DRIVE, TRANSFER FROM F7-C2 BY CITY SURVEY CREW 6/10/2002.
ELEVATION: 1426.960

MARK	REVISIONS	APPR.	DATE
A	Detail Revisions Per Field Change.		

DESIGNED BY: RICK DRAWN BY: BRYAN CHECKED BY: C-

CITY OF RIVERSIDE
PUBLIC WORKS DEPARTMENT

APPROVED BY	DATE	BY	APPROVED BY
PRINCIPAL ENGINEER	3/14/06		
PARK DEPARTMENT	—	—	CITY ENGINEER
TRAFFIC DIVISION	—	—	
PLANNING DEPARTMENT	—	—	DATE 2/22/06
STREET SERVICES	—	—	

SEWER IMPROVEMENT PLAN — PW04-0923

TRACT 29515
4' FORCE MAIN AND PUMP STATION
INDEX MAP AND GENERAL NOTES
A.P.N. 243-200-007, 243-220-001, 011, 015, 017
243-230-001, 002, 021, 022, 024

S-1928
SHEET 1 OF 6

HORIZ. SCALE: AS NOTED VERT. SCALE: AS NOTED J.N. 6500

File name: U:\Projects\Pulte\6500\dwg\sewer\6500PM01.dwg

Plot date: 2/14/2006 8:35 AM

AS-BUILT 5-08-09

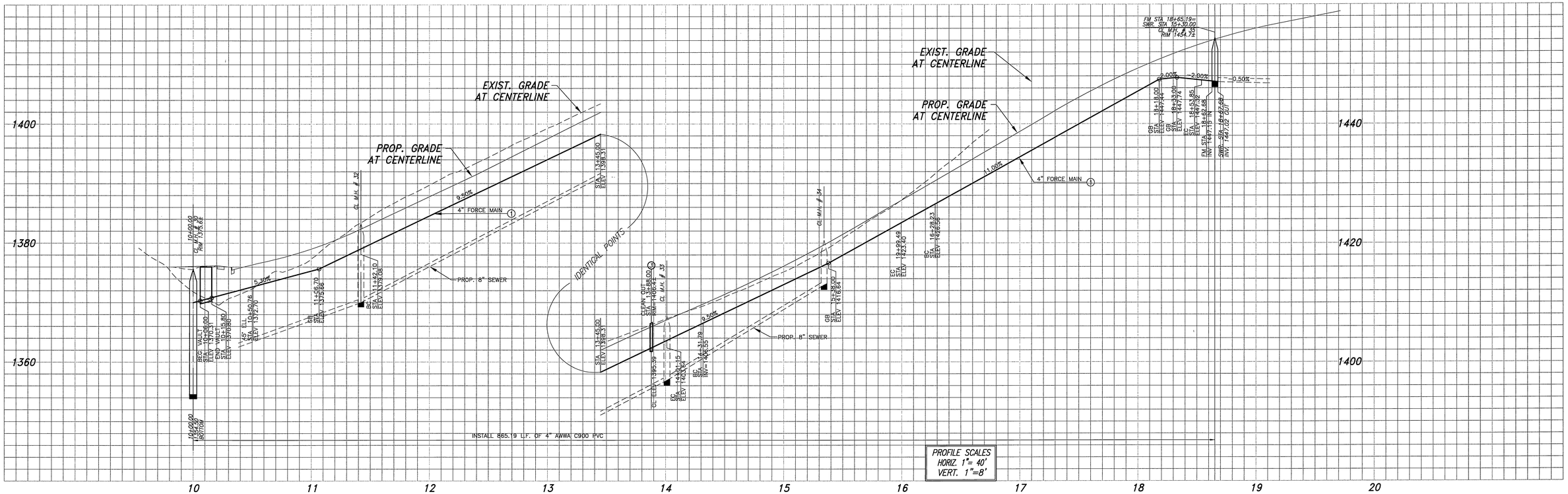

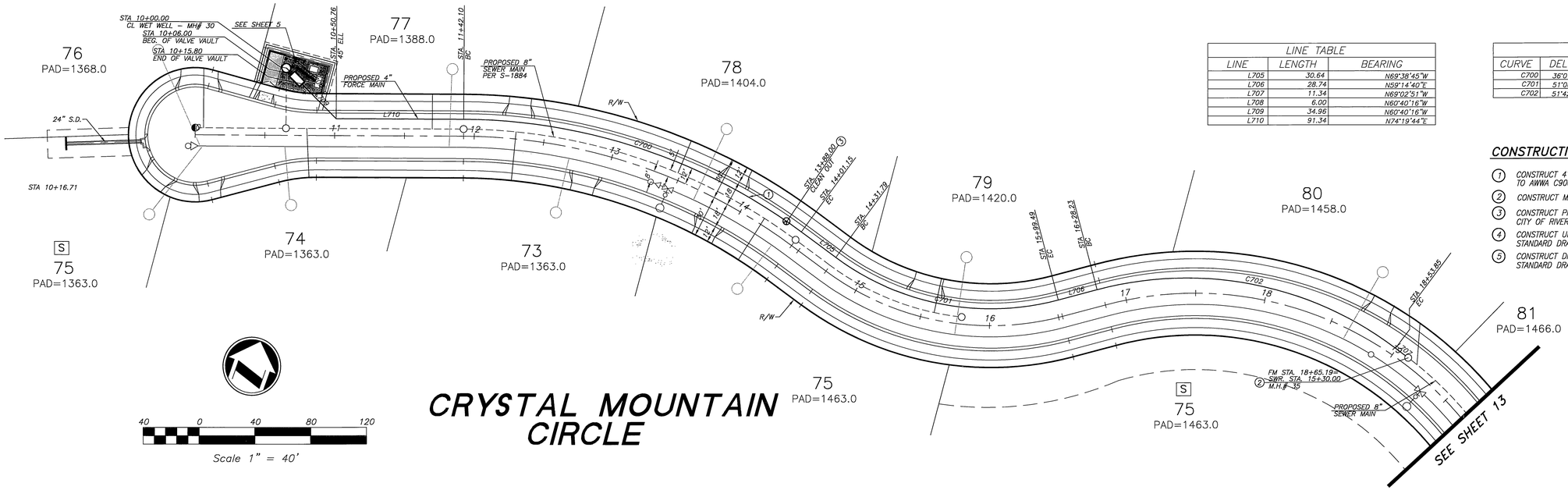

CRYSTAL MOUNTAIN CIRCLE

Scale 1" = 40'

LINE TABLE		
LINE	LENGTH	BEARING
L705	30.64	N69°38'45"W
L706	28.74	N59°14'40"E
L707	11.34	N69°02'51"W
L708	6.00	N60°40'16"W
L709	34.96	N60°40'16"W
L710	91.34	N74°19'44"E

CURVE TABLE				
CURVE	DELTA	RADIUS	LENGTH	TANGENT
C700	36°01'31"	412.00	259.05	133.97
C701	51°06'35"	188.00	167.70	89.89
C702	51°42'28"	250.00	225.62	121.15

CONSTRUCTION NOTES

1. CONSTRUCT 4" DIA. P.V.C. SEWER FORCE MAIN, SCH 80 CONFORMING TO AWWA C900, PER CITY OF RIVERSIDE STD., CASE II BEDDING
2. CONSTRUCT MANHOLE PER C/RIV. STD. DWG. 500
3. CONSTRUCT PRECAST CONCRETE FORCE MAIN CLEANOUT PER CITY OF RIVERSIDE STANDARD DRAWING NO. 559 (4" PIPE)
4. CONSTRUCT UNDER SIDEWALK DRAIN PER CITY OF RIVERSIDE STANDARD DRAWING NO. 411, W=3.0'
5. CONSTRUCT DRIVEWAY APPROACH PER CITY OF RIVERSIDE STANDARD DRAWING NO. 302, W=10.0'

REGISTERED PROFESSIONAL ENGINEER GLARISSA J.A. LEACH NO. 53390 EXP. 6-30-07 CIVIL STATE OF CALIFORNIA

CITY OF RIVERSIDE BUSINESS TAX ACCT.#058833 EXP.1/1/07

Underground Service Alert
Call: TOLL FREE
1-800 227-2600
TWO WORKING DAYS BEFORE YOU DIG

PLANS PREPARED BY:
adkan ENGINEERS
CIVIL ENGINEERING • SURVEYING • PLANNING
6920 AIRPORT DRIVE, RIVERSIDE, CA 92504
TEL: (951) 688-0241 FAX: (951) 688-9999
DATE: 2/14/06 UNDER THE SUPERVISION OF: R.C.E. 53390 6/30/07

BENCHMARK: F7 - K3
CITY OF RIVERSIDE REFERENCE LL47/7.
PK NAIL AND CITY ENGINEER TAG IN THE BASE OF A STREET LIGHT ALONG THE SOUTHERLY CURB OF OVERLOOK PARKWAY 175 FEET EAST OF CHATEAU RIDGE DRIVE, TRANSFER FROM F7-C2 BY CITY SURVEY CREW 6/10/2002.
ELEVATION: 1426.960

MARK	REVISIONS	APPR.	DATE

DESIGNED BY: RICK DRAWN BY: BRYAN CHECKED BY: C-

CITY OF RIVERSIDE
PUBLIC WORKS DEPARTMENT

APPROVED BY	DATE	BY
PRINCIPAL ENGINEER	2/14/06	
PARK DEPARTMENT		
TRAFFIC DIVISION		
PLANNING DEPARTMENT		
STREET SERVICES		

APPROVED BY
CITY ENGINEER
DATE 2/22/06

SEWER IMPROVEMENT PLAN
TRACT 29515
CRYSTAL MOUNTAIN CIRCLE - FORCE MAIN
A.P.N. 243-200-007, 243-220-001, 011, 015, 017
243-230-001, 002, 021, 022, 024
HORIZ. SCALE: 1" = 40' VERT. SCALE: 1" = 8'

PW04-0923
S-1928
SHEET 2 OF 6
J.N. 6500

File name: U:\Projects\Pulte\6500\dwg\sewer\6500FM02.dwg
Plot date: 2/14/2006 9:33 AM

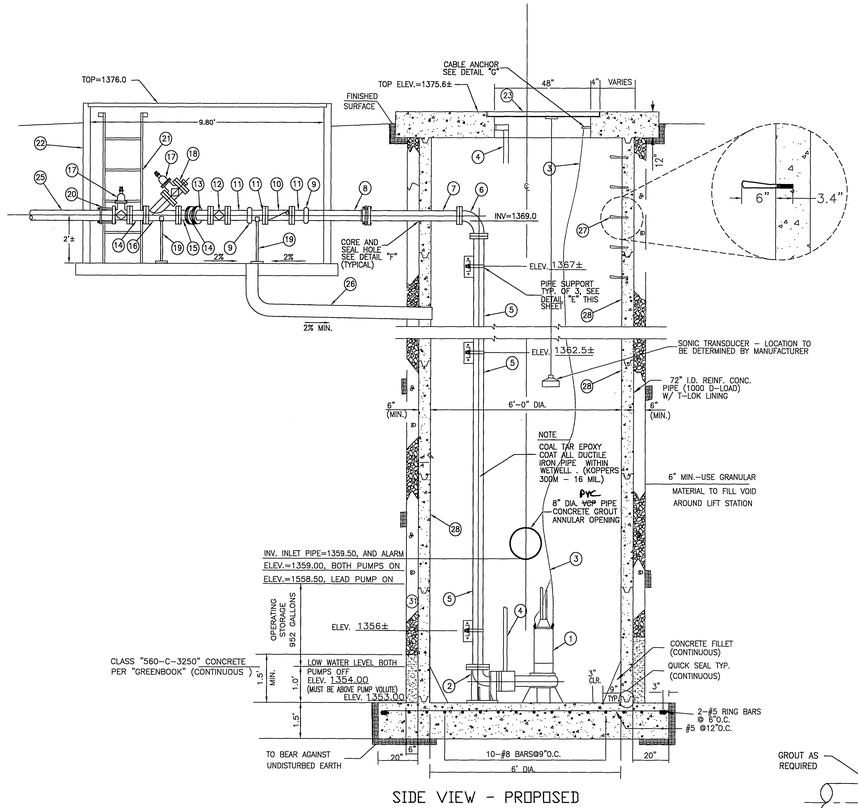

SIDE VIEW - PROPOSED WET WELL

DETAIL "A"

NOT TO SCALE

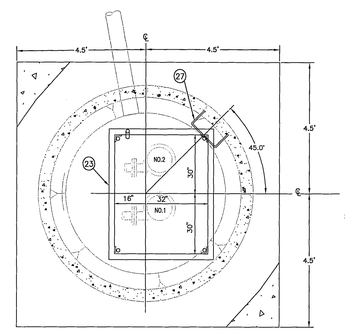

COVER PLAN

N.T.S.

DETAIL "B"

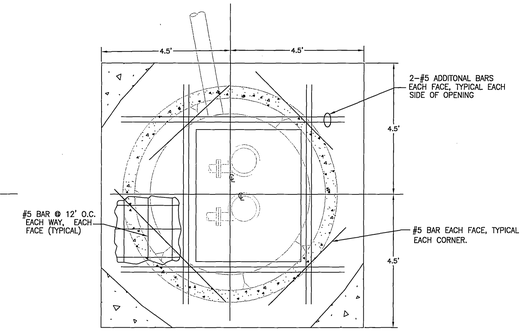

ADJUST STEP LOCATION AS NEEDED TO PERMIT PULLING PUMPS WITHOUT INTERFERENCE AND ACCESS WITHOUT LID INTERFERENCE

COVER REINFORCING PLAN

NOT TO SCALE

DETAIL "D"

COVER REINFORCEMENT FOR PARKWAY LOCATION ONLY,(NO TRAFFIC LOADS ALLOWED). PROVIDE GUARD POSTS

ABBREVIATIONS:

O.D. – OUTSIDE DIAMETER
I.D. – INSIDE DIAMETER
O.C. – ON CENTER
O.A.E. – OR APPROVED EQUAL
INV. – INVERT
N.P.T. – NATIONAL PIPE THREAD
P.V.C. – POLYVINYL CHLORIDE
N.E.C. – NATIONAL ELECTRIC CODE

NOTE:

CONTRACTOR SHALL OBTAIN SERVICES OF PUMP MANUFACTURE'S ENGINNERING REPRESENTAIVE TO REVIEW AND APPROVE INSTALLATION OF PUMPS.

CONTRACTOR SHALL DEMONSTRATE REMOVAL AND REPLACEMENT OF BOTH PUMPS AS PART OF INSTRUCTION OF OWNER'S PERSONNEL.

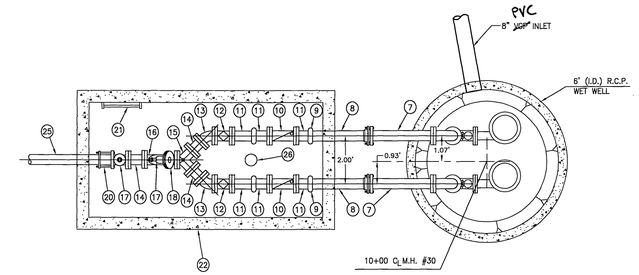

TOP VIEW PROPOSED WET WELL & PIPING

NOT TO SCALE

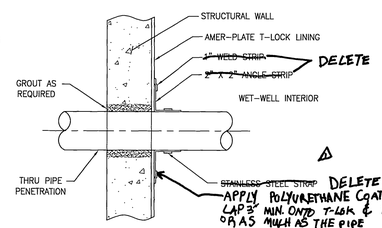

SEALING PENETRATION THRU T-LOCK LINED WALLS

NOT TO SCALE

DETAIL "F"

NOTE:
ALL PLATES, CHANNELS, BOLTS ETC., SHALL BE 316 SS

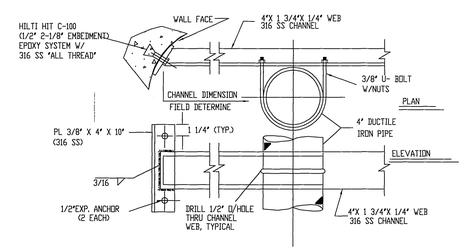

TYPICAL PIPE SUPPORT BRACKET DETAILS

(3 REQUIRED)
NOT TO SCALE

DETAIL "E"

MATERIALS DESCRIPTION	NOTE: O.A.E. (OR APPROVED EQUAL)
1	SUBMERSIBLE SEWAGE PUMP TDH 108' GPM 80 RPM 1750 HP ~~15~~ 25
2	MATING 90° ELBOW FOR SLIDE – AUTO COUPLING
3	1/4"X 5/16" STAINLESS STEEL NYLON COVERED LIFTING CABLE WITH STAINLESS STEEL EYEBOLT
4	1 1/2 " SCHEDULE 40 316S.S. STAINLESS STEEL PIPE GUIDE RAILS, AS SUPPLIED BY PUMP MFG. (TO BE ADJUSTED AS NECESSARY PER PUMP MFG. SPEC.)
5	4" DUCTILE IRON PIPE WITH FLANGED ENDS, A.N.S.I. CLASS 150
6	4" X 90° DUTILE IRON FLANGED ELBOW, CLASS 150 (LONG RADIUS)
7	4" DUCTILE IRON PIPE, RESTRAINED MECHANICAL JOINT X FLANGED END, CLASS 150
8	4" DUCTILE IRON PIPE, RESTRAINED MECHANICAL JOINT X VICTAULIC END, CLASS 150
9	4" VICTAULIC COUPLING
10	4" SPRING LOADED FLANGED EXTERNAL ARM SWING CHECK VALVE, CLASS 150
11	4" DUCTILE IRON FLANGED X VICTAULIC SPOOL, CLASS 150
12	4" FLANGED BALLCENTRIC VALVE, CLASS 150, KEYSTONE (O.A.E.) (FULL DIAM. OPENING)
13	4" X 45° DUCTILE IRON FLANGED ELBOW, CLASS 150
14	4" DUCTILE IRON FLANGED SPOOL, CLASS 150
15	4" X 4" X 4" DUCTILE IRON TRUE WYE (FLANGED), CLASS 150
16	4" X 4" X 4" DUCTILE IRON 45° WYE (FLANGED), CLASS 150
17	4" FLANGED PLUG VALVE, CLASS 150
18	2" X 4" O.D. CAST IRON REDUCING FLANGE, CLASS 150 (WITH 2" TREADED PLUG)
19	PIPE SUPPORT PER DETAIL C – (THIS SHEET)
20	4" CAST IRON COUPLING ADAPTER, DRESSER STYLE 127 (O.A.E.)
21	6.5' GALVANIZED VAULT LADDER PER ALHAMBRA FOUNDARY A-3400 (O.A.E.)
22	BROOKS PRODUCTS 800 SERIES PRECAST VAULT (57 1/2" W X 117 1/2" L X 80" D INSIDE DIMENSIONS) WITH ARMORED TOP SECTION & BOLT DOWN TOP (4 PIECE TOP) (O.A.E.) INSTALL ON 11'-0" X 6'-0" X 6" THICK CONCRETE SLAB (520-C-2500)
23	5'-0" WIDE X 4'-0" LONG DOUBLE LEAF ALUMINUM ACCESS DOOR WITH STAINLESS STEEL HARDWARE AND COMPRESSION SPRING OPERATORS, 300 P.S.F. LIVE LOAD, BILCO TYPE "JD" (O.A.E.), INSTALL PER MFG. RECOMMENDATIONS.
24	BROOKS PRODUCTS 67PB PRECAST PULL BOX (24" X 36" X 24" DEEP) WITH TRAFFIC COVER (O.A.E)
25	4" DIA. PVC SEWER MAIN, SCH 80 PER AWWA C900
26	4" PVC DRAIN PIPE
27	1/2" DIA. ENCAPSULATED WITH PLASTIC STEEL STEP. PRECAST OR GROUTED IN PLACE @ 15" O.C.
28	ALL WET WELL INTERIOR CONCRETE TO BE LINED WITH T-LOCK PVC LINING, AVAILABLE FROM AMERON PROTECTIVE LINING PRODUCTS, 201 N. BERRY ST., BREA, CALIFORNIA, (714) 256-7755

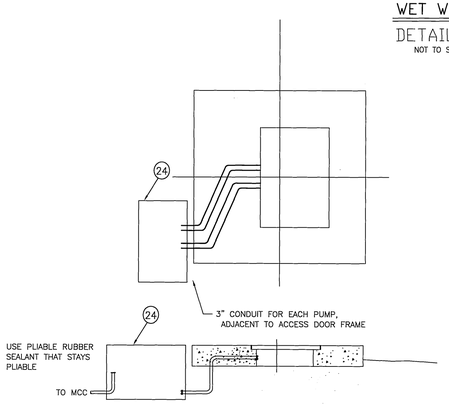

LIFT STATION NOTES:

GENERAL NOTES:
1. ALL HATCHES AND HATCH HARDWARE SHALL BE STAINLESS STEEL (NOTE ON PLANS).
2. THE INTERIOR OF THE WET WELL NEEDS TO BE CORROSION PROTECTED.
3. THE CONTRACTOR MUST SUBMIT MAINTENANCE AND SPARE PART INFORMATION FOR THE PUMPS, VALVES, AND MECHANICAL COMPONENTS. MECHANICAL COMPONENTS MUST HAVE SECTION VIEWS, EXPLODED VIEWS, AND A COMPLETE PARTS LISTING. THE NAME, AND ADDRESS AND TELEPHONE NUMBER FOR ALL SUPPLIERS MUST BE PROVIDED.
4. THE CONTRACTOR MUST PROVIDE MANUFACTURED SPARE PARTS TO THE CITY.
5. THREE PHASE POWER IS REQUIRED FOR LIFT STATION (480 VOLT).
6. THE PUMP MOTORS MUST BE SIZED NOT TO EXCEED THEIR RATED HORSE POWER AT ANY POINT ON THE PUMP CURVE.
7. THE CONTRACTOR MUST PROVIDE A 60' (MIN.) JUMPER FROM THE CONTROL PANEL TO THE GENERATOR FOR EMERGENCY POWER CONNECTION. ACTUAL LENGTH WILL BE DETERMINED BY AVAILABILITY OF GENERATOR POWER.

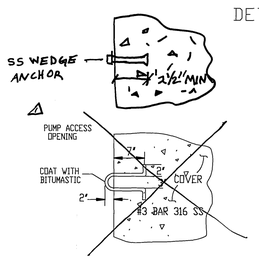

CABLE ANCHOR DETAIL

NOT TO SCALE

DETAIL "G"

NOTE:
GALVANIZE AFTER FABRICATION

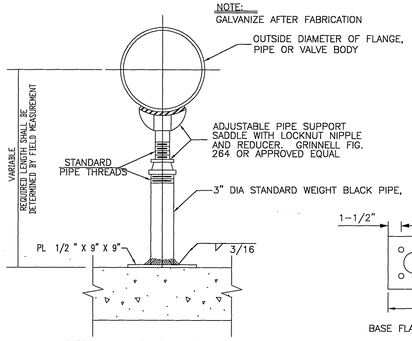

PIPE SUPPORT DETAIL

NOT TO SCALE

DETAIL "C"

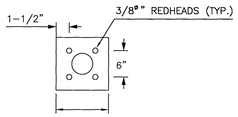

BASE FLANGE DETAIL

CITY OF RIVERSIDE BUSINESS TAX ACCT.#058833 EXP.1/1/07

REGISTERED PROFESSIONAL ENGINEER CLARISSA J.A. LEACH NO. 53390 EXP. 6-30-07 CIVIL STATE OF CALIFORNIA

Underground Service Alert
Call: TOLL FREE
1-800 227-2600
TWO WORKING DAYS BEFORE YOU DIG

PLANS PREPARED BY
adkan ENGINEERS
CIVIL ENGINEERING • SURVEYING • PLANNING
6820 AIRPORT DRIVE, RIVERSIDE, CA 92504
TEL: (951) 688-0241 FAX: (951) 688-0699
DATE 2/14/06
UNDER THE SUPERVISION OF: R.C.E. 53390 6/30/07

BENCHMARK: F7 - K3
CITY OF RIVERSIDE REFERENCE LL47/7.
PK NAIL AND CITY ENGINEER TAG IN THE BASE OF A STREET LIGHT ALONG THE SOUTHERLY CURB OF OVERLOOK PARKWAY 175 FEET EAST OF CHATEAU RIDGE DRIVE, TRANSFER FROM F7-C2 BY CITY SURVEY CREW 6/10/2002.
ELEVATION: 1426.960

MARK	REVISIONS	APPR.	DATE
1	Detail Revisions per Field changes		

DESIGNED BY: RICK DRAWN BY: BRYAN CHECKED BY: C-

CITY OF RIVERSIDE
PUBLIC WORKS DEPARTMENT

APPROVED BY	DATE	BY
PRINCIPAL ENGINEER	2/14/06	
PARK DEPARTMENT	—	—
TRAFFIC DIVISION	—	—
PLANNING DEPARTMENT	—	—
STREET SERVICES	—	—

APPROVED BY
CITY ENGINEER
DATE 2/22/06

SEWER IMPROVEMENT PLAN
TRACT 29515
SEWER PUMP STATION
DETAILS
A.P.N. 243-200-007, 243-220-001, 011, 015, 017
243-230-001, 002, 021, 022, 024

PW04-0923
S-1928
SHEET 3 OF 6
J.N. 6500

HORIZ. SCALE: SCALE: AS NOTED VERT. SCALE:

RNZ

Plot date: 2/14/2006 9:31 AM

File name: U:\Projects\Pulte\6500\dwg\sewer\6500FM03.DWG

NOTES:

1. ———— DENOTES WIRING BY MILLTRONICS
   - - - - - - - - DENOTES WIRING BY CONTRACTOR
   ALL WIRING MUST BE DONE IN CONJUNCTION WITH APPROVED CONDUIT BOXES AND FITTINGS, AND TO PROCEDURES IN ACCORDANCE WITH ALL GOVERNING REGULATIONS.
2. SELECT CORRECT VOLTAGE VIA SELECTOR SWITCH ON BOARD B, BY CONTRACTOR.
3. TRANSDUCER CABLE, COAXIAL RG-62U OR EQUIVALENT, MUST BE RUN IN A GROUNDED METAL CONDUIT OR EMT WITH NO OTHER ELECTRICAL CIRCUITS. GROUND SHIELD AT THE MULTIRANGER ONLY. FOR CABLE RUNS LONGER THAN THE TRANSDUCER CABLE SEE DETAIL "A". INSULATE SHIELD AT JUNCTIONS TO PREVENT INADVERTENT GROUNDING.
4. CONTACTS OF RELAYS SHOWN IN DE-ENERGIZED ALARM CONDITION. ALL RELAYS ARE CERTIFIED FOR USE IN EQUIPMENT WHERE SHORT CIRCUIT CAPACITY OF THE CIRCUITS IN WHICH THEY ARE CONNECTED IS LIMITED BY FUSES HAVING RATINGS NOT EXCEEDING THE RATINGS OF THE RELAYS.
5. ROUTE 4-20 mA CABLE IN A SEPARATE CONDUIT, ENTERING THE ENCLOSURE AS NEAR AS POSSIBLE TO THE ISOLATOR. KEEP WIRING AS SHORT AS POSSIBLE. DO NOT ROUTE CABLE ALONG TERMINAL BLOCK. KEEP SHIELD INTACT UP TO OUTPUT TERMINALS.
6. CHANGE SW2 POSITION IF USING A SEPARATE TEMPERATURE SENSOR. TEMPERATURE SENSOR CABLE, BELDEN 8760 OR EQUIVALENT, MAY BE RUN IN CONDUIT WITH THE TRANSDUCER CABLE. FOR CABLE RUNS LONGER THAN THE TEMPERATURE SENSOR CABLE SEE DETAIL "B". CHANGE SW2 POSITION BACK IF THE TEMPERATURE SENSOR IS REMOVED.
7. CONTRACTOR TO VERIFY THAT THE DC INPUT VOLTAGE CONFORMS TO THE VOLTAGE STATED ON THE VOLTAGE INPUT STICKER, (ON MOTHERBOARD).
8. FOR FURTHER INFORMATION REFER TO THE HYDRORANGER INSTRUCTION MANUAL OR CONTACT THE NEAREST MILLTRONICS REPRESENTATIVE.

⚠ SEE INSTRUCTION MANUAL FOR PROPER OPERATION

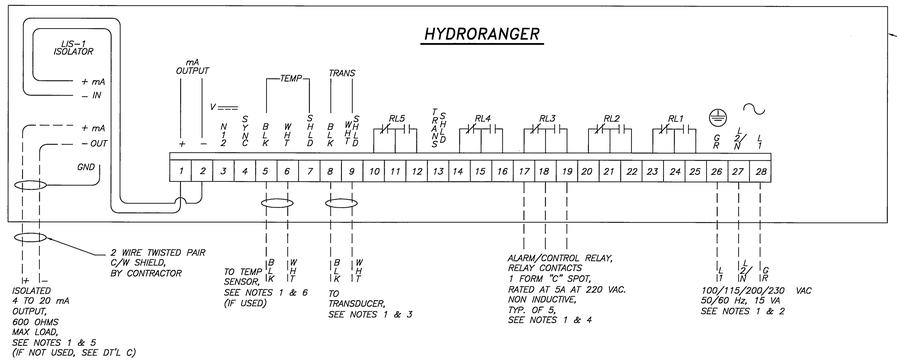

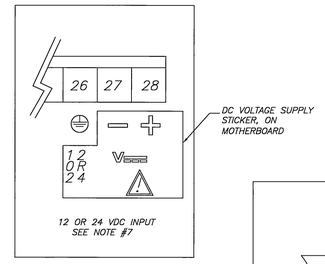

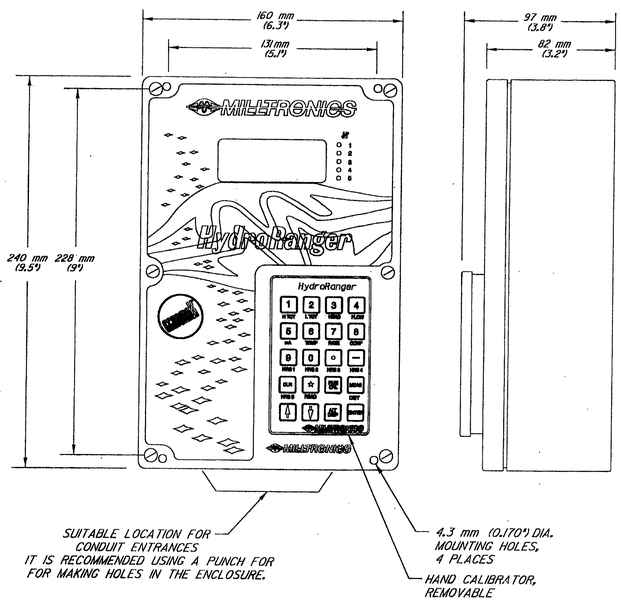

HYDRORANGER TO BE MOUNTED IN MCC

1. TRANSDUCER CABLE CONNECTIONS MAY BE SOLDERED OR ASSEMBLED ON A TERMINAL STRIP.
2. ALL PULL BOXES, CONDUITS, AND JUNCTION BOXES MUST BE GROUNDED TO THE CONDUIT.
3. TRANSDUCER CABLE MUST BE RUN IN A GROUNDED CONDUIT SYSTEM WITH NO OTHER ELECTRICAL CIRCUITS.
4. ROUTE CONDUIT FOR LOWEST EMF INTERFERENCE FROM MOTOR DRIVES, POWER BUSSES, ETC.
5. OBSERVE STANDARD WORK PRACTICES, THE NEC, AND LOCAL REGULATIONS.

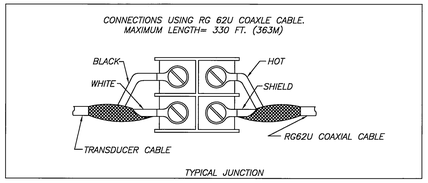

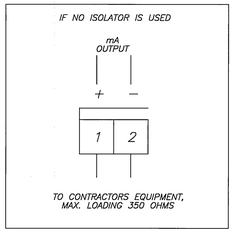

DETAIL "C"

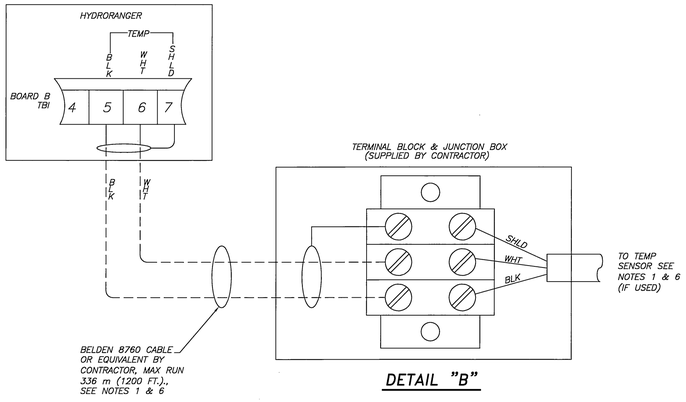

DETAIL "B"

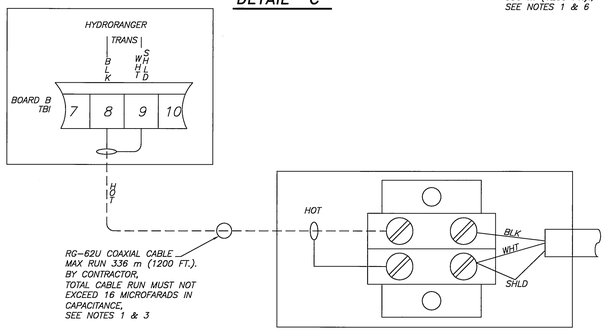

DETAIL "A"

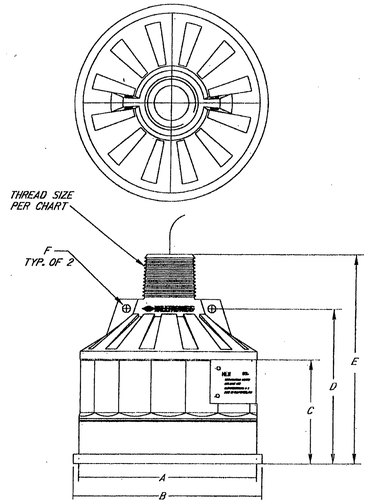

STANDARD TRANSDUCER

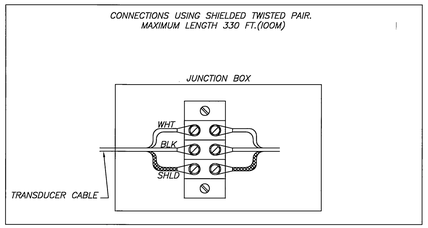

TRANSDUCER TYPE	DIMENSIONS [METRIC] 'A'	'B'	'C'	'D'	'E'	'F'	THREAD SIZE	CABLE TYPE
XCT-8	3.2 [81.3]	3.45 [87.6]	2.6 [66.0]	3.6 [91.4]	4.8 [121.9]	0.15 [3.8]	1" NPT	LR29248
XCT-12	4.5 [114.3]	4.75 [120.7]	2.6 [66.0]	3.85 [97.8]	5.17 [131.3]	0.20 [5.1]	1" NPT	LR29248
XPS-10	3.2 [81.3]	3.45 [87.6]	2.6 [66.0]	3.6 [91.4]	4.8 [121.9]	0.15 [3.8]	1" NPT	YR40154
XPS-15	4.5 [114.3]	4.75 [120.7]	2.6 [66.0]	3.85 [97.8]	5.17 [131.3]	0.20 [5.1]	1" NPT	YR40154
XPS-30	6.6 [167.6]	6.92 [175.8]	4.58 [116.3]	6.4 [162.6]	7.7 [195.6]	0.20 [5.1]	1.5" NPT	YR40154
XPS-40	7.8 [198.1]	8.10 [205.7]	5.5 [139.7]	7.6 [193.0]	9.15 [232.4]	0.30 [7.6]	1.5" NPT	YR40154

REGISTERED PROFESSIONAL ENGINEER CHARISSA J.A. LEACH NO. 53390 EXP. 6-30-07 CIVIL STATE OF CALIFORNIA

CITY OF RIVERSIDE BUSINESS TAX ACCT.#058833 EXP.1/1/07

Underground Service Alert
Call: TOLL FREE
1-800 227-2600
TWO WORKING DAYS BEFORE YOU DIG

PLANS PREPARED BY:
adkan ENGINEERS
CIVIL ENGINEERING • SURVEYING • PLANNING
6820 AIRPORT DRIVE, RIVERSIDE, CA 92504
TEL: (951) 688-0241 FAX: (951) 688-0599
DATE: 2/14/06
UNDER THE SUPERVISION OF: R.C.E. 53390 6/30/07

BENCHMARK: F7 - K3
CITY OF RIVERSIDE REFERENCE LL47/7.
PK NAIL AND CITY ENGINEER TAG IN THE BASE OF A STREET LIGHT ALONG THE SOUTHERLY CURB OF OVERLOOK PARKWAY 175 FEET EAST OF CHATEAU RIDGE DRIVE, TRANSFER FROM F7-C2 BY CITY SURVEY CREW 6/10/2002.
ELEVATION: 1426.960

MARK	REVISIONS	APPR.	DATE

DESIGNED BY: RICK DRAWN BY: BRYAN CHECKED BY: C-

CITY OF RIVERSIDE
PUBLIC WORKS DEPARTMENT

APPROVED BY	DATE	BY
PRINCIPAL ENGINEER	2/14/2006	
PARK DEPARTMENT	—	—
TRAFFIC DIVISION	—	—
PLANNING DEPARTMENT	—	—
STREET SERVICES	—	—

APPROVED BY: CITY ENGINEER
DATE 2/22/06

SEWER IMPROVEMENT PLAN
TRACT 29515
SEWER PUMP STATION DETAILS
A.P.N. 243-200-007, 243-220-001, 011, 015, 017
243-230-001, 002, 021, 022, 024
HORIZ. SCALE: VERT. SCALE:

PW04-0923
S-1928
SHEET 4 OF 6
J.N. 6500

RVR

Plot date: 2/14/2006 9:30 AM

File name: U:\Projects\Pulte\6500\dwg\sewer\6500FM04.dwg

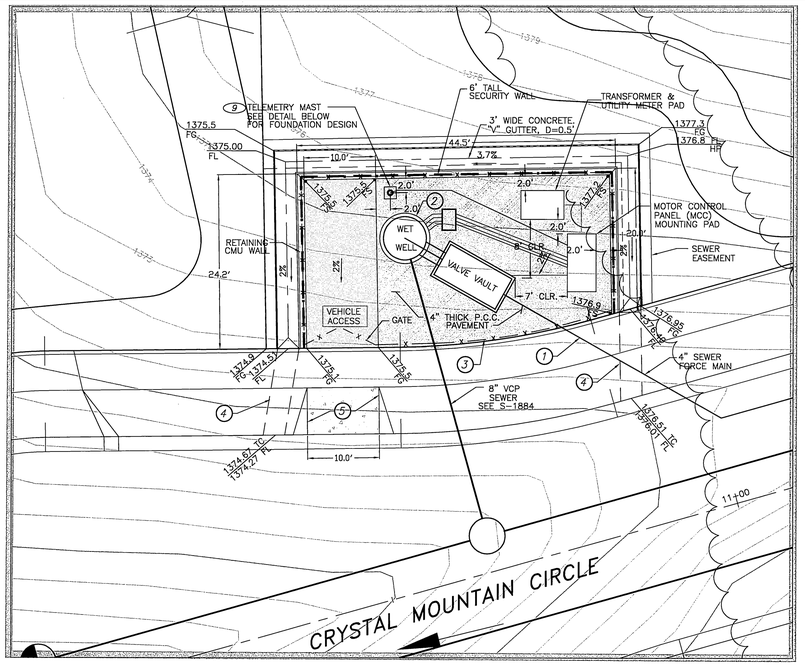

10 0 10 20 30

SCALE: 1" = 10'

LIFT STATION PLAN

GENERAL NOTES:

1. PROVIDE ALL NECESSARY CONDUITS AND REQUIRED WIRING FROM CONTROL PANEL TO THE ELECTRICAL EQUIPMENT IN THE WET WELL, AS SHOWN AND AS REQUIRED.
2. TERMINAL BLOCK(S) FOR EQUIPMENT STATUS, FAILURE ALARMS, ETC. ARE TO BE FURNISHED AND INSTALLED AT THE DEVELOPERS EXPENSE. THE CONTRACTOR SHALL COORDINATE THIS WORK WITH THE CITY OF RIVERSIDE.
3. THE CONTRACTOR MUST SUBMIT MAINTENANCE AND MANUFACTURERS RECOMMENDED SPARE PARTS FOR ALL ELECTRICAL AND INSTRUMENTATION COMPONENTS. A COMPLETE PARTS LISTING WITH THE NAME, ADDRESS, AND TELEPHONE NUMBER FOR THE SUPPLIES MUST BE PROVIDED.
4. THE CONTRACTOR MUST PROVIDE THE MANUFACTURERS RECOMMENDED SPARE PARTS TO THE CITY.
5. THE CONTRACTOR SHALL PROVIDE COMPLETE AS-BUILT DRAWINGS OF THE ELECTRICAL SYSTEM. THIS INCLUDES THE GENERAL WIRING AND THE INTERNAL WIRING OF ALL THE CONTROL PANEL COMPONENTS. MOSCAD SPECIFICATIONS WILL BE PROVIDED BY THE CITY. EQUIPMENT TO BE PURCHASED BY THE DEVELOPER AND INSTALLED BY THE CITY APPROVED CONTRACTOR. THE CITY WILL REVIEW AND APPROVE THE DRAWINGS. THE CONTRACTOR WILL MAKE ANY CHANGES AND SUBMIT FINAL SETS TO THE CITY.
6. ALL WIRES MUST BE INDIVIDUALLY TAGGED AT EVERY TERMINATION AND INSIDE EVERY JUNCTION BOX. WIRE NUMBERING AND TAGGING SYSTEMS MUST BE SUBMITTED TO THE CITY FOR REVIEW AND APPROVAL.
7. THE LIFT STATION WET WELL IS A CLASS 1, DIV.1 HAZARDOUS AREA. ALL WORK AND EQUIPMENT MUST CONFORM TO THIS CLASSIFICATION.
8. THE AREA WITHIN THE U.G. PRECAST CONCRETE PULL BOX IS ALSO CLASSIFIED AS A CLASS 1, DIV.1 HAZARDOUS AREA AND IS CONSIDERED AS AN EXTENSION OF THE WELL BY VIRTUE OF THE UNDERGROUND CONDUIT SYSTEMS WHICH ARE TO REMAIN OPEN AND NOT SEALED, FOR THE PURPOSE OF EASILY REMOVING AND INSTALLING THE CABLE SYSTEMS IN THE WET WELL.
9. THE CONTRACTOR SHALL PROVIDE ALL MOUNTING HARDWARE FOR TRANSDUCER, FLOATS, MOUNTING SUPPORTS FOR ALL WET WELL CABLES, ETC.
10. PROVIDE A CODE SIZE GROUND WIRE IN ALL CONDUITS.
11. CONDUIT AND WIRING WITHIN THE CONTROL PANEL IS NOT SHOWN. PROVIDE AND INSTALL AS REQUIRED.
12. PROVIDE AUX. CONTACT BLOCKS FOR H-O-A SWS TO MONITOR SWITCH POSITION.
13. THE CONTRACTOR SHALL REVIEW AND CONFIRM WITH THE CITY THE EQUIPMENT TO BE PROVIDED.
14. CONTRACTOR TO FURNISH AND INSTALL TELEMETRY MAST PER THE REQUIREMENTS DETERMINED BY A RADIO SURVEY PERFORMED AND PAID FOR BY THE DEVELOPER.
15. DEVELOPER SHALL CONTRACT WITH A CITY APPROVED CONTRACTOR TO INSTALL THE MOSCAD RTU AND INTEGRATE INTO THE CITY'S SCADA SYSTEM. (MUST BE A CITY APPROVED CONTRACTOR)

CONSTRUCTION NOTES

1. CONSTRUCT 4" DIA. P.V.C. SEWER FORCE MAIN, SCH 80 CONFORMING TO AWWA C900, PER CITY OF RIVERSIDE STD., CASE II BEDDING
2. CONSTRUCT WET WELL SEE DETAIL ON SHEET 3
3. 6' TALL FENCE IS TO BE BLACK POWER COAT FINISH TUBULAR STEEL.
4. UNDER SIDEWALK DRAIN PER A.P.W.A. STD. PLAN 151-1 TYPE 2 INLET, S=3.0' - SEE STREET PLANS R-3892.
5. DRIVEWAY APPROACH PER CITY OF RIVERSIDE STANDARD DRAWING NO. 302, A=10.0' - SEE STREET PLANS R-3892.

SPECIFIC NOTES:

1. 100AMP, 480V, NON FUSABLE DOUBLE THROW TRANSFER SWITCH CULTER HAMMER, TYPE DTK IN NEMA 1 ENCLOSURE.
2. UNDERGROUND PRECAST PULLBOX. 24"Lx36"Wx24"D. BROOKS PRODUCTS OR EQUAL WITH TRAFFIC COVER. PROVIDE 3' MIN. CABLE SLACK (COILED) IN BOX.
3. EXPLOSION PROOF JUNCTION BOX (SIZE AS REQUIRED) CROUSE-HINDS TYPE EJB WITH HINGED COVER AND SUBMERSIBLE RESIN- CAST SPLICES (WIRING, TYP. OF 2). PROVIDE CABLE GRIPS FOR CORDS. (SEE DETAIL THIS SHEET)
5. EXPLOSION PROOF JUNCTION BOX WITH SEALING COVER FOR TRANSDUCER CABLE (NO SPLICES). (SEE DETAIL THIS SHEET)
6. MOTOROLA MOSCAD, PAID FOR BY DEVELOPER, AND INSTALLED BY CONTRACTOR IN A SEPARATE CABINET INSIDE THE CONTROL PANEL.
7. PROVIDE GENERATOR RECEPTACLE. KILLARK 8581/21-407 AND 8581/22-407 PLUG. PROVIDE 60' MIN. SJO POWER CORD.
8. PROVIDE CABLE BUSHINGS FOR CONDUITS INTO WET WELL.
9. CONTRACTOR SHALL PROVIDE SUITABLE YAGI ANTENNA WITH MAST FOR RTU.
10. THE RTU SHALL BE PROVIDED WITH THE MANUFACTURER'S RECOMMENDED 12V BATTERY BACKUP.
11. XP CONDUIT SEAL.

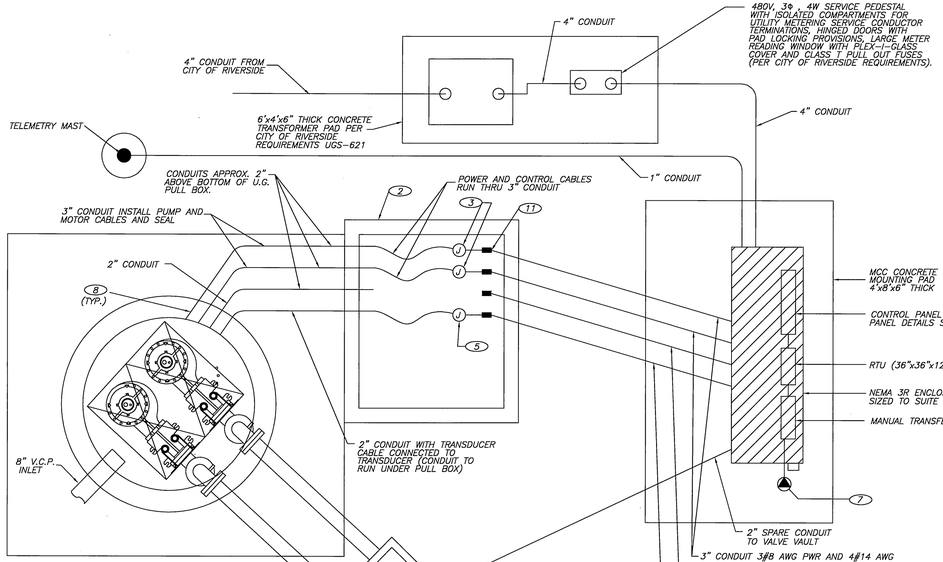

NOTES:

1. ALL BURIED CONDUIT TO BE SCH. 80 PVC

LIFT STATION POWER PLAN

N.T.S.

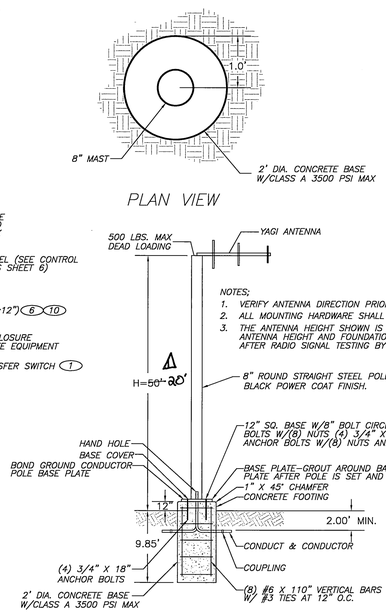

NOTES:

1. VERIFY ANTENNA DIRECTION PRIOR TO SETTING POLE.
2. ALL MOUNTING HARDWARE SHALL BE GALVANIZED.
3. THE ANTENNA HEIGHT SHOWN IS FOR BID PURPOSES ONLY. ANTENNA HEIGHT AND FOUNDATION SIZE MAY BE REVISED AFTER RADIO SIGNAL TESTING BY CONTRACTOR IS PERFORMED.

TELEMETRY MAST FOUNDATION DESIGN DETAIL

N.T.S.

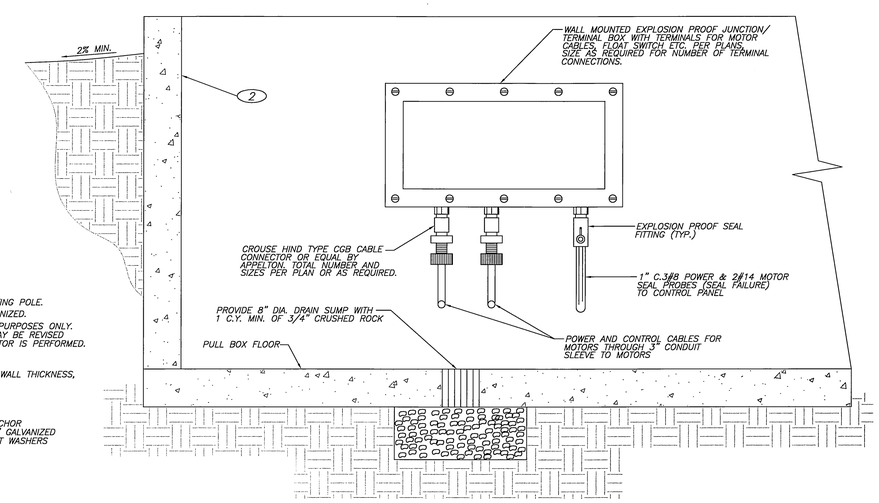

TYP. EXPLOSION PROOF JUNCTION/ TERMINAL BOX DETAIL IN UNDERGROUND PULL BOX

N.T.S.

REGISTERED PROFESSIONAL ENGINEER CLARISSA J.A. LEACH NO. 53390 EXP. 6-30-07 CIVIL STATE OF CALIFORNIA

CITY OF RIVERSIDE BUSINESS TAX ACCT.#058833 EXP.1/1/07

Underground Service Alert

Call: TOLL FREE

1-800 227-2600

TWO WORKING DAYS BEFORE YOU DIG

PLANS PREPARED BY:

adkan ENGINEERS

CIVIL ENGINEERING • SURVEYING • PLANNING

6820 AIRPORT DRIVE, RIVERSIDE, CA 92504

TEL: (951) 688-0241 FAX: (951) 688-0599

DATE 2/14/06 UNDER THE SUPERVISION OF: R.C.E. 53390 6/30/07

BENCHMARK: F7 - K3

CITY OF RIVERSIDE REFERENCE LL47/7. PK NAIL AND CITY ENGINEER TAG IN THE BASE OF A STREET LIGHT ALONG THE SOUTHERLY CURB OF OVERLOOK PARKWAY 175 FEET EAST OF CHATEAU RIDGE DRIVE, TRANSFER FROM F7-C2 BY CITY SURVEY CREW 6/10/2002.

ELEVATION: 1426.960

MARK	REVISIONS	APPR.	DATE
1	Detail Revisions Per Field Change.		

DESIGNED BY: RICK DRAWN BY: BRYAN CHECKED BY: C-

CITY OF RIVERSIDE
PUBLIC WORKS DEPARTMENT

	DATE	BY	APPROVED BY	DATE	BY
PRINCIPAL ENGINEER	4/24/06				
PARK DEPARTMENT			CITY ENGINEER		
TRAFFIC DIVISION					
PLANNING DEPARTMENT			DATE 4/22/06		
STREET SERVICES					

RVZ

SEWER IMPROVEMENT PLAN

TRACT 29515

SEWER PUMP STATION

DETAILS

A.P.N. 243-200-007, 243-220-001, 011, 015, 017
243-230-001, 002, 021, 022, 024

HORIZ. SCALE: VERT. SCALE:

PW04-0923

S-1928

SHEET 5 OF 6

J.N. 6500

Plot date: 2/14/2006 9:29 AM

File name: U:\Projects\Pulte\6500\dwg\sewer\6500FM05.dwg

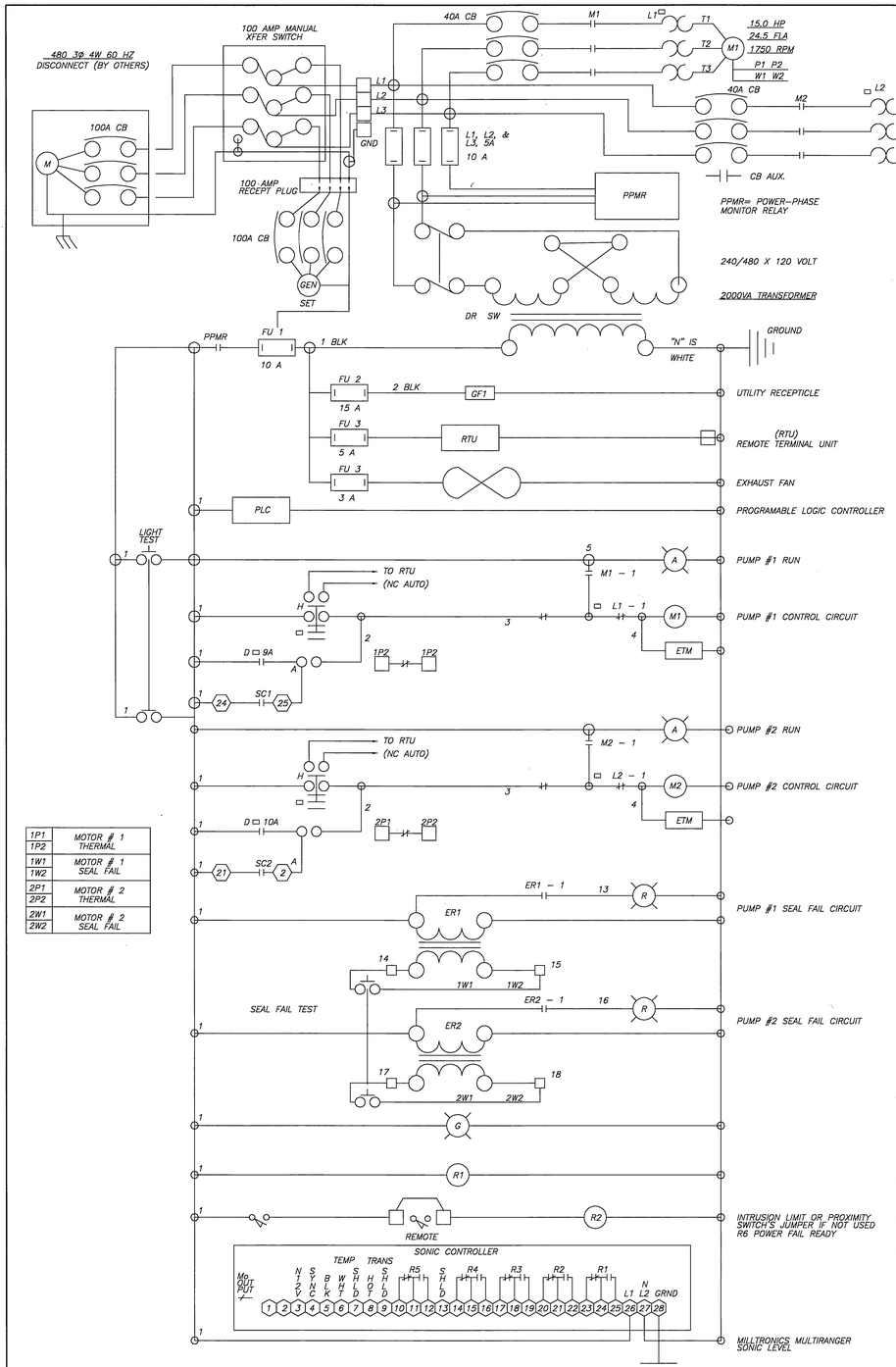

1P1	MOTOR # 1
1P2	THERMAL
1W1	MOTOR # 1
1W2	SEAL FAIL
2P1	MOTOR # 2
2P2	THERMAL
2W1	MOTOR # 2
2W2	SEAL FAIL

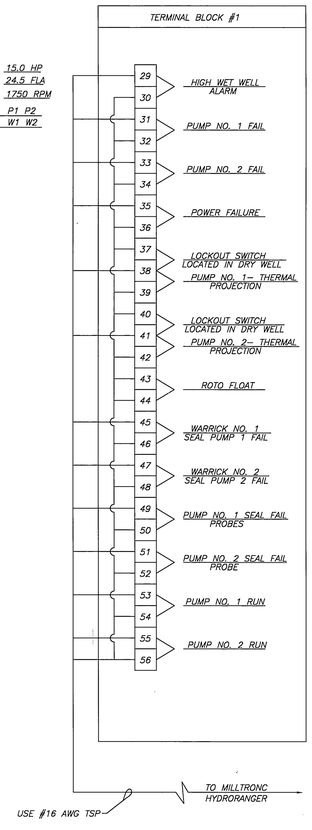

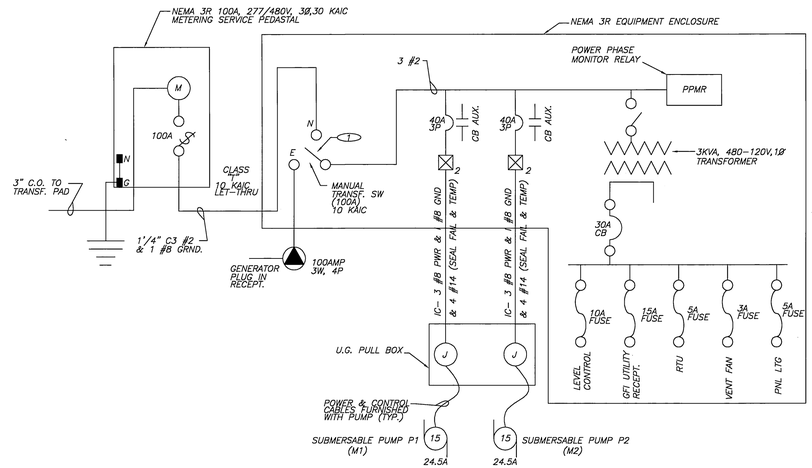

LIFT STATION SINGLE LINE DIAGRAM

N.T.S.

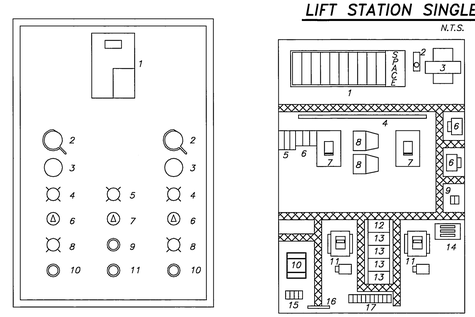

PLC AND PANEL LAYOUT

N.T.S.

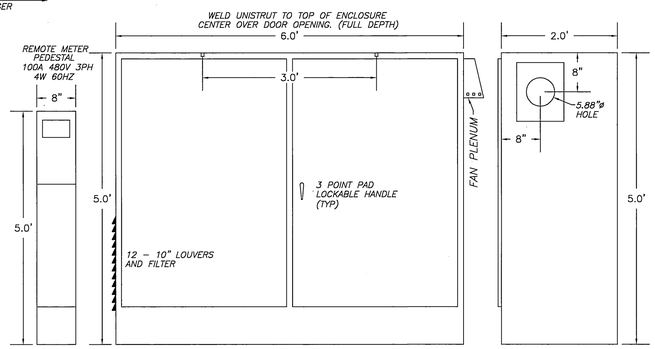

CONTROL PANEL DETAIL

N.T.S.

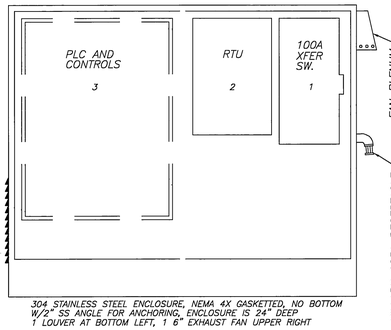

LEGEND

- CONTROL PANEL
- UNDERGROUND CONDUIT
- UNDERGROUND CONDUIT, STUBBED UP
- WALL MOUNTED JUNCTION AND/OR TERMINAL BOX (CODE SIZE)
- 480V., 100 AMP 3W,4P.W.P. RECEPT. MOUNTED ON EXTERIOR OF PNL ENCLOSURE
- CABLE
- INDICATES REFERENCE TO SPECIFIC NOTE

CONTROLS

- CONTROL SWITCH
- FUSE
- TRANSFORMER
- CONTACT NORMALLY OPEN
- CONTACT NORMALLY CLOSED
- O/L — MOTOR OVERLOAD
- PUMP RUNNING PILOT LIGHT, AMBER LENS
- ETM — ELAPSED TIME METER
- M1 — MOTOR STARTER COIL
- R — PILOT LIGHT, RED LENS INDICATES – FAILURE
- R — PILOT LIGHT, GREEN LENS – INDICATES CONTROL POWER
- GROUND
- LIMIT SW (DOOR SWITCH)

SINGLE LINE DIAGRAM

- M — SERVICE METER
- 100A 3P — 480V CIRCUIT BREAKER– 100AMP, 3–POLE
- MANUAL TRANSFER SWITCH
- 2 — 480V, 3ø, MAGNETIC STARTER NEMA SIZE 2
- FUSE
- TRANSFORMER
- 25 — MOTOR H.P. INDICATED
- SWITCH

NOTES:

1. ● DENOTES TERMINALS REQUIRING WIRES TO BE CONNECTED FROM CONTROL PANEL TO REMOTE EQUIPMENT.
2. PANEL TO BE WIRED WITH ALL WIRES AND TERMINALS NUMBERED AND TERMINATED ON TERMINAL STRIPS, WIRING DIAGRAM TO BE GIVEN TO THE CITY OF RIVERSIDE.
3. MANUFACTURER TO BE ALLEN BRADLEY, FURNAS, TOSHIBA OR CUTLER HAMMER.
4. PROVIDE NECESSARY CONDUITS TO PUMP LOCATION FROM M.C.C. (ONE FOR POWER, ONE FOR CONTROL, ONE FOR MILLTRONICS HYDRORANGER).
5. SEPARATE THE FLOAT SWITCH WIRES FEEDING INTRINSIC RELAY (WARRICK NO. 3) AND RUN IN SEPERATE 3/4" CONDUIT. SEPARATE LEADS TO WARRICK RELAY NO. 1 & NO. 2 COMING FROM SEAL PROBES AND RUN IN 3/4" CONDUIT.
6. FLUORESCENT LIGHT TO BE INSTALLED IN CONTROL PANEL FOR NIGHT MAINTENANCE.

RTU:

SHALL MONITOR ONLY, NOT CONTROL
INDICATE LOW LEVEL (D1)
INDICATE WET WELL LEVEL ANALOG OUTPUT (D)
INDICATE SITE ENTRY (D1)
INDICATE AC FAILURE (D1)
INDICATE INDIVIDUAL PUMP FAILURE (D1)
INDICATE PUMP AUTO, PUMP NOT AUTO (D1)
HAND SWITCH POSITION
HAND, OFF, AUTO
INDICATE PUMP RUN STATUS (DI)
INDICATE ULTRASONIC FAILURE (D1)
INDICATE INTRUSION ALARMS
INDICATE SEAL FAILURE

CONTROLS:

–MANUAL BYPASS FOR LEVELS, PLC, MILLTRONICS, ETC. AND SHALL DIRECTLY ENERGIZE THE STARTERS.
–AUTO FUNCTION SHALL BE CONTROLLED BY THE PLC OR IN AN EVENT OF THE PLC FAILURE, THE MILLTRONICS –WILL PROVIDE BACKUP CONTROL START, STOP, AND ALTERNATE LEAD AND LAG PUMPS.

EQUIPMENT

1. MODICON QUANTUM PLC
2. CONTROL POWER SWITCH
3. CONTROL POWER TRANSFORMER
4. HIGH VOLTAGE BARRIER
5. LINE VOLTAGE TERMINAL BLOCK
6. CONTROL FUSE
7. MOTOR CIRCUIT BREAKER
8. SEAL FAIL RELAY
9. CONTROL POWER TERMINAL
10. INTRINSIC FLOAT SW RELAY
11. MOTOR STARTERS
12. POWER/PHASE MOTOR RELAY
13. CONTROL RELAY
14. PLC 120 ISOLATION TRANSFORMER
15. INTRINSIC TERMINAL BLOCK
16. GROUND TERMINAL BLOCK
17. MOTOR CONTROL TERMINAL BLOCK

XXXX = WIRE WAYS

EQUIPMENT

1. SONIC CONTROLLER
2. CIRCUIT BREAKER OPERATORS
3. ELAPSED TIME METER
4. MOTOR RUN PILOT LIGHT.
5. CONTROL POWER PILOT LIGHT
6. HAND–OFF–AUTO (HOA) SWITCH
7. LEAD LAG SELECTOR SWITCH
8. SEAL FAIL LIGHT
9. LIGHT TEST PUSH BUTTON
10. OVERLOAD RESET PUSH BUTTON
11. SEAL FAIL TEST PUSH BUTTON

CONTROL LOGIC NOTES:

THE PLC WILL PERFORM THE FOLLOWING CONTROL FUNCTIONS:
1. CYCLE PUMPS ON AND OFF ACCORDING TO WET WELL LEVELS.
2. ALTERNATE LEAD AND LAG PUMPS AFTER EACH CYCLE.
3. RECORD PUMP LAPSED TIME RUN HOURS.
4. PROVIDE LOW LEVEL AND HIGH LEVEL OUTPUT TO RTU.
5. TURN OFF PUMPS ON SEAL FAILURE AND PROVIDE OUTPUT TO RTU.
6. TURN OFF PUMPS ON THERMAL OVERLOAD AND PROVIDE OUTPUT TO RTU.
7. CALL LAG PUMP IN EVENT OF LEAD PUMP FAILURE.
8. RECOGNIZE ULTRASONIC LEVEL CONTROL SYSTEMS FAILURE AND PROVIDE INPUT TO RTU.
9. RECOGNIZE PUMP HAND SWITCH POSITION AND ADJUST CONTROL LOGIC.
10. RECOGNIZE ANY FAILURE CONDITION AND PROVIDE OUTPUT TO RTU.
11. RECOGNIZE POWER FAILURE AND CLOSE ALARM CONTACT.
12. RECOGNIZE SITE INTRUSIONS AND CLOSE ALARM CONTACT.
13. MILLTRONICS LEVEL CONTROLLERS SHALL PROVIDE BACKUP PUMP CONTROL IN EVENT OF PLC FAILURE ALL ALARM CONTACTS AND SIGNALS TO THE RTU WILL BE CONTROLLED BY THE PLC.

INSTRUMENTATION & CONTROL NOTES:

1. CONTROL PANEL MUST BE CUSTOM BUILT TO THE CITY REQUIREMENTS.
2. CONTRACTOR MUST SUBMIT ALL WIRING DIAGRAMS FOR REVIEW BY THE CITY PRIOR TO ASSEMBLY.
3. CONTRACTOR MUST PROVIDE THE CITY THE OPPORTUNITY TO INSPECT PANEL DURING ASSEMBLY.
4. THE PANEL SHALL BE NEMA 4X.
5. PUMPS SHALL BE CONTROLLED USING A MODICON QUANTUM PLC. NO SUBSTITUTIONS. THIS IS REQUIRED FOR STANDARDIZATION.
6. CONTRACTOR MUST SUBMIT A COPY OF THE PLC PROGRAM FOR REVIEW AND APPROVAL. A FINAL FULLY ANNOTATED PROGRAM MUST BE PROVIDED WITH THE AS–BUILT DRAWINGS.
7. WET WELL LEVEL WILL BE MONITORED USING A MILTRONICS MULTIRANGER ULTRASONIC LEVEL METER. NO SUBSTITUTIONS. THIS IS REQUIRED FOR STANDARDIZATION.
8. THE LIFT STATION SHALL BE EQUIPPED WITH ULTRASONIC FAILURE INDICATOR.
9. THE CONTROL PANEL SHALL BE EQUIPPED WITH ACROSS THE LINE STARTING SO THE PUMPS CAN BE OPERATED MANUALLY IN THE EVENT OF PLC OR OTHER EQUIPMENT FAILURE.
10. PROVIDE MOSCAD RTU (RADIO TRANCEIVER UNIT) CONTROL EQUIPMENT, RADIO, AND SCADA TY–900 YAGI ANTENA TO BE PER CITY'S STANDARD. RADIO ANTENNA TO BE MOUNTED ON TOP OF ANTENNA MAST. LOCAL AND CENTRAL STATION SCADA PROGRAMMING SHALL BE PROVIDED BY THE CONTRACTOR. CONTRACTOR SHALL COORDINATE WITH CITY APPROVED SCADA PROGRAMMER TO ESTABLISH REMOTE SCADA MONITORING AND CONTROL OF THIS FACILITY FROM THE CITY'S CENTRAL STATION COMPUTER MONITORING SYSTEM. NO EXCEPTIONS WITH STARTUP INTO CITY'S SYSTEM.
11. THE CONTRACTOR MUST CONNECT AND TEST THE RTU TO ESTABLISH COMMUNICATION WITH THE WASTEWATER TREATMENT PLANT BASE. THE CITY APPROVED CONTRACTOR WILL INTEGRATE THE RTU INTO THE PLANT SCADA CONTROL SYSTEM. CONTRACTOR TO PAY ALL CITY FEES REQUIRED TO IMPLEMENT SCADA CONTROL SYSTEM PROGRAMMING AND REGISTRATION AT CITY'S BASE STATION.

REGISTERED PROFESSIONAL ENGINEER — CHARISSA J.A. LEACH — NO. 53390 — EXP. 6-30-07 — CIVIL — STATE OF CALIFORNIA

Underground Service Alert
Call: TOLL FREE
1–800 227–2600
TWO WORKING DAYS BEFORE YOU DIG

CITY OF RIVERSIDE BUSINESS TAX ACCT.#058833 EXP.1/1/07

PLANS PREPARED BY:
adkan ENGINEERS
CIVIL ENGINEERING•SURVEYING•PLANNING
6820 AIRPORT DRIVE, RIVERSIDE, CA 92504
TEL: (951) 688-0241 FAX: (951) 688-0599
DATE: 2/14/06
UNDER THE SUPERVISION OF: R.C.E. 53390 6/30/07

BENCHMARK: F7 – K3
CITY OF RIVERSIDE REFERENCE L147/7.
PK NAIL AND CITY ENGINEER TAG IN THE BASE OF A STREET LIGHT ALONG THE SOUTHERLY CURB OF OVERLOOK PARKWAY 175 FEET EAST OF CHATEAU RIDGE DRIVE, TRANSFER FROM F7–C2 BY CITY SURVEY CREW 6/10/2002.
ELEVATION: 1426.960

MARK	REVISIONS	APPR.	DATE

DESIGNED BY: RICK DRAWN BY: BRYAN CHECKED BY: C–

CITY OF RIVERSIDE
PUBLIC WORKS DEPARTMENT

APPROVED BY	DATE	BY
PRINCIPAL ENGINEER	2/14/2006	
PARK DEPARTMENT		
TRAFFIC DIVISION		
PLANNING DEPARTMENT		
STREET SERVICES		

APPROVED BY: CITY ENGINEER — DATE 2/22/06

SEWER IMPROVEMENT PLAN — PW04–0923
TRACT 29515
SEWER PUMP STATION
DETAILS
A.P.N. 243–200–007, 243–220–001, 011, 015, 017
243–230–001, 002, 021, 022, 024
S–1928
SHEET 6 OF 6
HORIZ. SCALE: VERT. SCALE: J.N. 6500

Plot date: 2/14/2006 9:17 AM

File name: U:\Projects\Pulte\6500\dwg\sewer\6500PM06.dwg