RIVERSIDE COUNTY FLOOD CONTROL AND WATER CONSERVATION DISTRICT

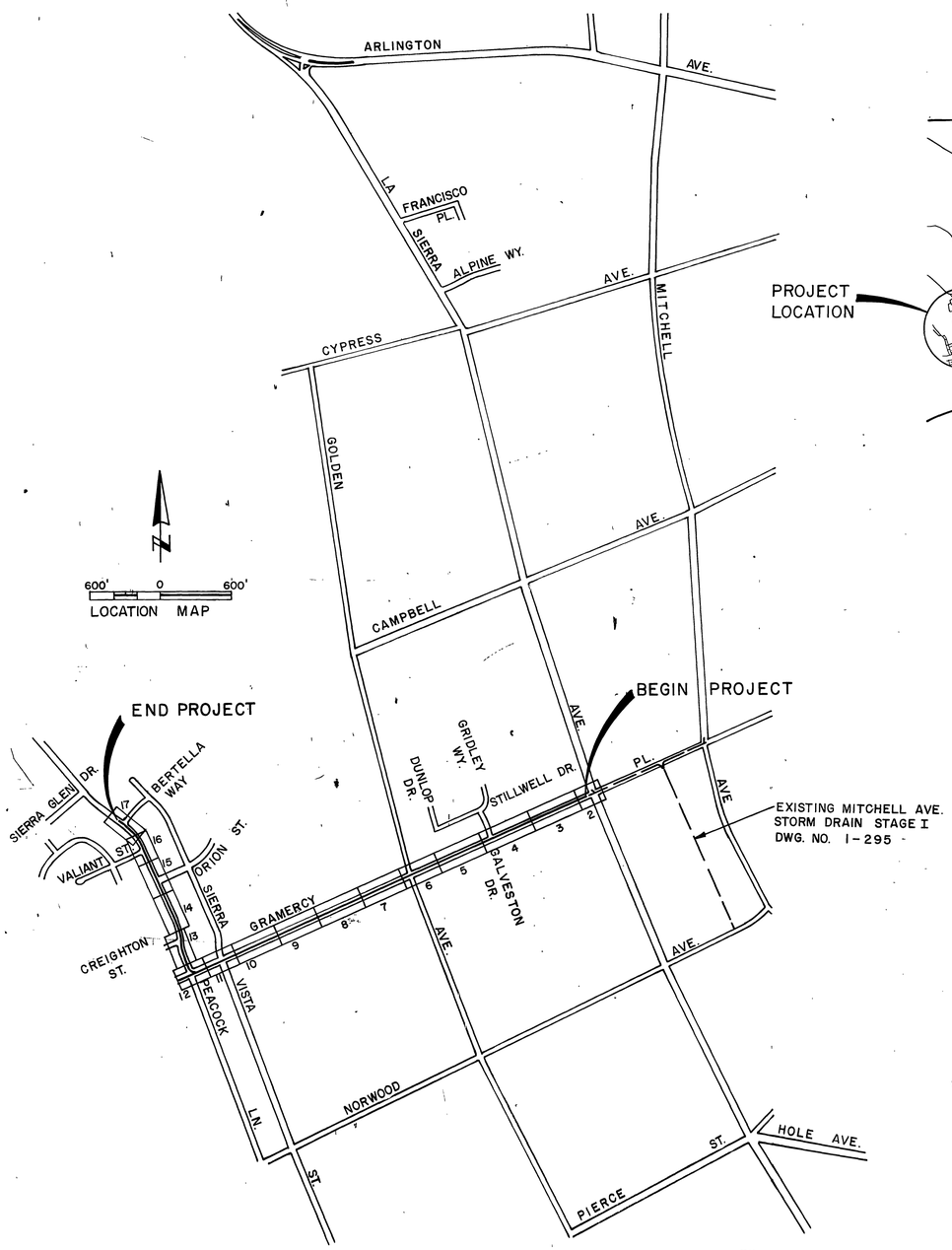

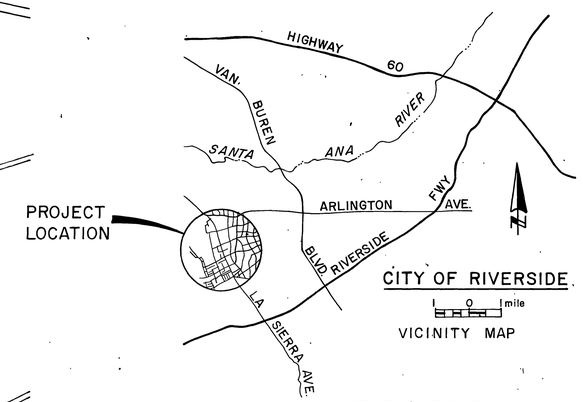

ABBREVIATIONS

∡ PT.	ANGLE POINT
BC	BEGINNING OF CURVE
CB	CATCH BASIN
CFS	CUBIC FEET PER SECOND
℄	CENTERLINE
C.O.	CLEAN OUT
CONC.	CONCRETE
CMP	CORRUGATED METAL PIPE
CMPA	CORRUGATED METAL PIPE ARCH
CP	CONTROL POINT
D	D-LOAD
EC	END CURVE
ELEV.	ELEVATION
FPS	FEET PER SECOND
GR.	GRADE
HGL	HYDRAULIC GRADE LINE
IP	IRON PIPE
IRR	IRRIGATION LINE
JS	JUNCTION STRUCTURE
L	LENGTH
LD	LOCAL DEPRESSION
MB	MAIL BOX
MH	MANHOLE
N&T	NAIL AND TIN
PP	POWER POLE
PRC	POINT OF REVERSE CURVATURE
Q	RATE OF FLOW
R	RADIUS
RCFC & WCD	RIVERSIDE COUNTY FLOOD CONTROL AND WATER CONSERVATION DISTRICT
RCP	REINFORCED CONCRETE PIPE
R/W	RIGHT OF WAY
S	SLOPE
SD	STORM DRAIN
SS	SANITARY SEWER
STA	STATION
S/W	SIDEWALK
T	TANGENT
V	VELOCITY OF FLOW OR DEPTH OF CATCH BASIN
W	WIDTH

LEGEND

BLOCK WALL OR MASONRY
CATCH BASIN, EXISTING — CB
CATCH BASIN, PROPOSED
DRIVEWAY, DIRT
FENCE, CHAIN LINK EXISTING — X
FENCE, WIRE — X
FIRE HYDRANT
GAS LINE, I.D. IN INCHES — G2
IRRIGATION LINE, I.D. IN INCHES — IRR12
JUNCTION STRUCTURE NO. 2
LIGHT STANDARD
MAILBOX
MANHOLE, SEWER
POLE WITH ANCHOR
POWER POLE
RIGHT OF WAY, STREET
SANITARY SEWER LINE, I.D. IN INCHES — SS8
SHRUBS
SIGN — SIGN
SOIL BORING
STORM DRAIN, EXISTING, I.D. IN INCHES — SD16
STORM DRAIN, PROPOSED CONNECTOR PIPE
STREET LIGHT ON MAST ARM
STREET LIGHT CONDUIT — SL
TELEPHONE CABLE, UNDERGROUND — T
TREE, OTHER THAN PALM
TREE, PALM
WATER LINE, I.D. IN INCHES — W4
WATER METER
WATER VALVE

INDEX

	TITLE SHEET	1
	PLAN & PROFILE SHEETS	2-17
	CONNECTOR PIPE PROFILES	18-19

RCFC & WCD STANDARD DRAWINGS

CB 100	CATCH BASIN NO. 1	20
CB 101	CATCH BASIN NO. 4	21-22
M 813	CURB & GUTTER	23
CB 103	MANHOLE FRAME & COVER FOR CATCH BASINS	24
CB 104	CATCH BASIN GRATE	25
CB 105	DETAIL OF CATCH BASIN OPENING	26
CB 106	CATCH BASIN REINFORCEMENT	27
M 807	SANITARY SEWER PROTECTION	28
LD 201	LOCAL DEPRESSION NO. 2	29
LD 202	LOCAL DEPRESSION NO. 3	30
JS 227	JUNCTION STRUCTURE NO. 2	31-32
JS 229	JUNCTION STRUCTURE NO. 4	33
MH 251	MANHOLE NO. 1	34-35
MH 252	MANHOLE NO. 2	36
MH 254	MANHOLE NO. 4	37-38
MH 255	MANHOLE FRAME AND COVER, NON-ROCKING	39
MH 257	MANHOLE SHAFT FOR CAST PIPE	40
MH 259	STANDARD DROP STEP	41
M 802	PIPE BEDDING DETAILS	42
M 803	CONCRETE COLLARS	43

GENERAL NOTES

1. TIES FOR CATCH BASINS AS SHOWN ON THE DRAWINGS ARE FROM CURB RETURN TO CENTER LINE OF CATCH BASIN, UNLESS OTHERWISE SHOWN.
2. REMOVE AND DISPOSE OF CONC. GUTTER ALONG ℄ OF GRAMERCY. PL. PAVEMENT REPLACEMENT OVER MAINLINE ON GRAMERCY PL. SHALL CONSIST OF 1" A.C. ONLY. ALL OTHER SHALL BE 3" A.C. ON 6" A.B.
3. LOCATIONS OF CATCH BASIN CONNECTOR PIPE JUNCTIONS WITH CATCH BASINS AS SHOWN ON THE DRAWINGS ARE SCHEMATIC. IT IS INTENDED THAT SUCH JUNCTIONS BE LOCATED AT THE DOWNSTREAM ENDS OF THE CATCH BASINS, UNLESS OTHERWISE SHOWN. IN ALL CASES THE EXACT LOCATIONS WILL BE DETERMINED IN THE FIELD BY THE ENGINEER TO MEET FIELD CONDITIONS.
4. J.S. NO. 4 SHALL BE USED FOR ALL THE INLET CONNECTIONS TO THE MAINLINE UNLESS OTHERWISE SHOWN.
5. ALL OPENINGS RESULTING FROM CUTTING OR PARTIAL REMOVAL OF EXISTING CULVERTS, OR PIPE ENDS SHALL BE SEALED WITH 8" OF CLASS B CONCRETE NOTED ON PLANS AS "PLUG."

REVISIONS			
REF.	DESCRIPTION	APPR.	DATE

RIVERSIDE COUNTY FLOOD CONTROL AND WATER CONSERVATION DISTRICT

DESIGNED BY: H.D.&C.C.
DRAWN BY: S. Moody
DATE DRAWN: 1-7-75
CHECKED BY: D.M.M.
APPROVED BY: John W. Bassett, CHIEF ENGINEER R.E. NO. 8022
DATE: 11-21-75

LA SIERRA CHANNEL
GRAMERCY PLACE STORM DRAIN
TITLE SHEET
1970 STORM DRAIN BOND ISSUE PROJECT NO. 20

PROJECT NO. 1-0-067
DRAWING NO. 1-297
SHEET NO. 1 OF 43

AS BUILT

D-316

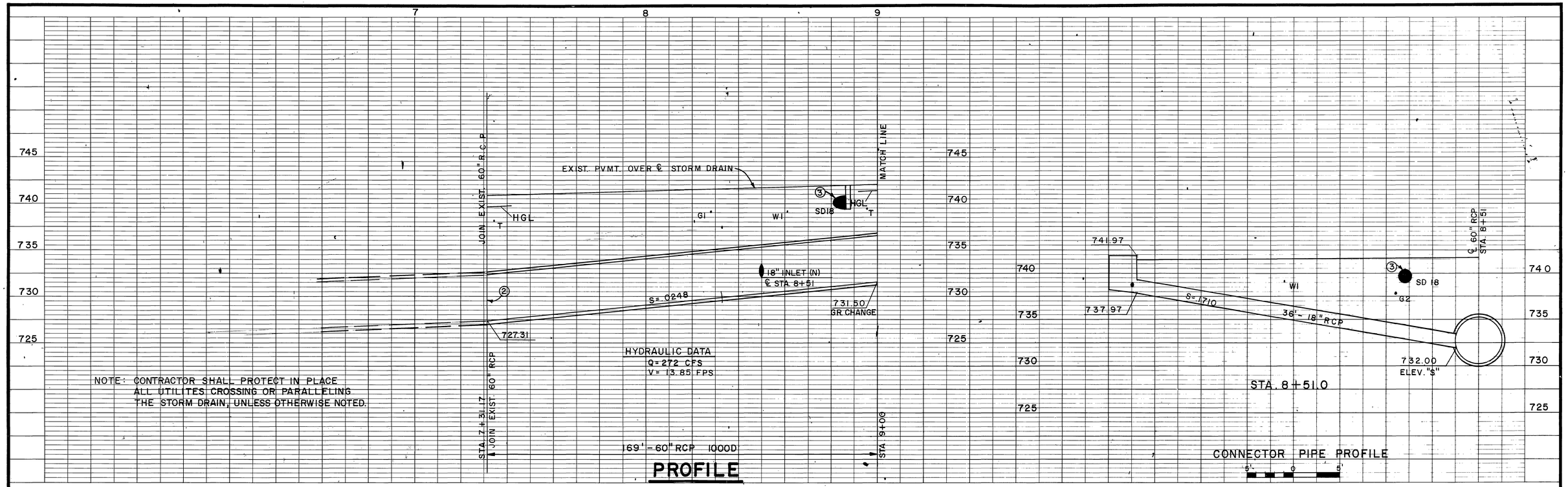

NOTES:

1. SEE DWG. NO. 1-295 FOR EXIST. MITCHELL AVE. S.D.
2. REMOVE TIMBER BULKHEAD.
3. REMOVE INTERFERING PORTIONS OF 18" S.D. AND PLUG.
4. SEE CONNECTOR PIPE PROFILE THIS SHEET.

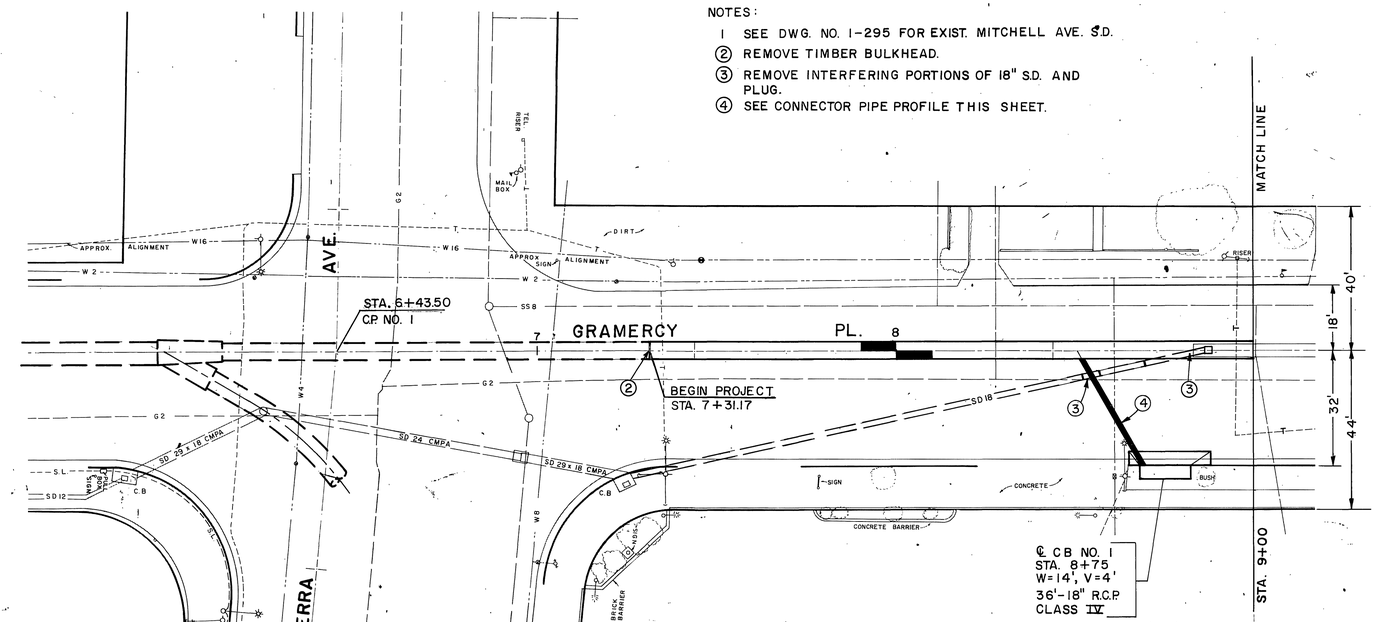

PLAN

1"=20'

20' 0 20'

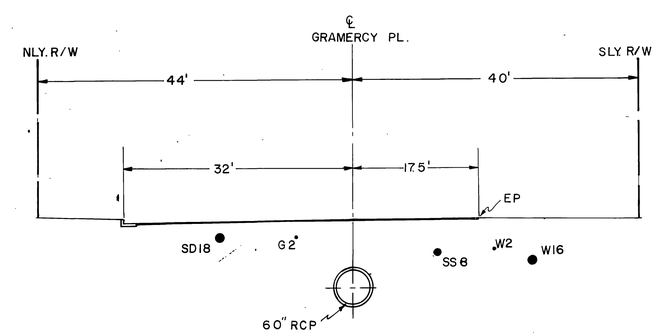

SECTION AT STA. 8+00

10' 0 10'

BENCH MARK C.P. NO. 1 TOP 3/4" I.P., FLUSH, AT INTERSECTION LA SIERRA AND GRAMERCY. ELEV. 740.47	REVISIONS				RIVERSIDE COUNTY FLOOD CONTROL AND WATER CONSERVATION DISTRICT	LA SIERRA CHANNEL GRAMERCY PLACE	PROJECT NO. 1-0-067
SCALE:					DESIGNED BY: H.D.&C.C.	STORM DRAIN	DRAWING NO. 1-297
					DRAWN BY: S. Moody	STA. 7+31.17 TO STA. 9+00	
					DATE DRAWN: 1-7-75	1970 STORM DRAIN BOND ISSUE PROJECT NO. 20	SHEET NO. 2 OF 43
DATE:	No Change				CHECKED BY: D.M.M.		
	REF.	DESCRIPTION	APPR.	DATE			

APPROVED BY: [signature] CHIEF ENGINEER R.E. NO. 8822 DATE: 4-21-75

AS BUILT

D-316

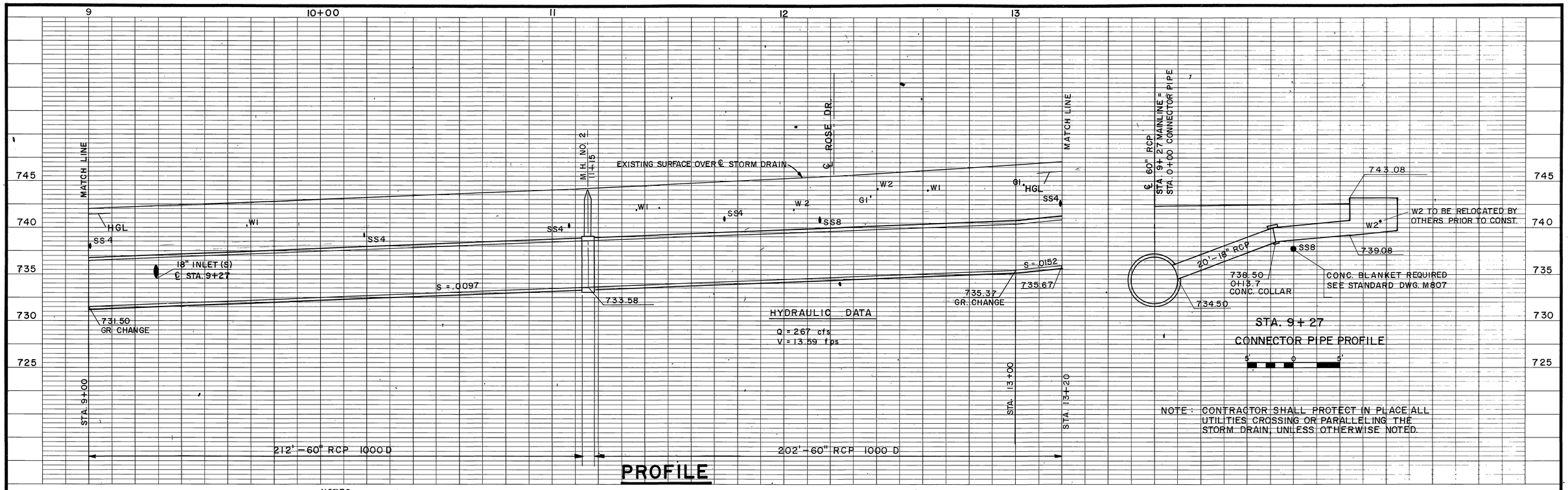

NOTE: CONTRACTOR SHALL PROTECT IN PLACE ALL UTILITIES CROSSING OR PARALLELING THE STORM DRAIN, UNLESS OTHERWISE NOTED.

PROFILE

NOTES

1. SEE CONNECTOR PIPE PROFILE THIS SHEET.
2. W2 TO BE RELOCATED BY OTHERS PRIOR TO CONSTRUCTION.

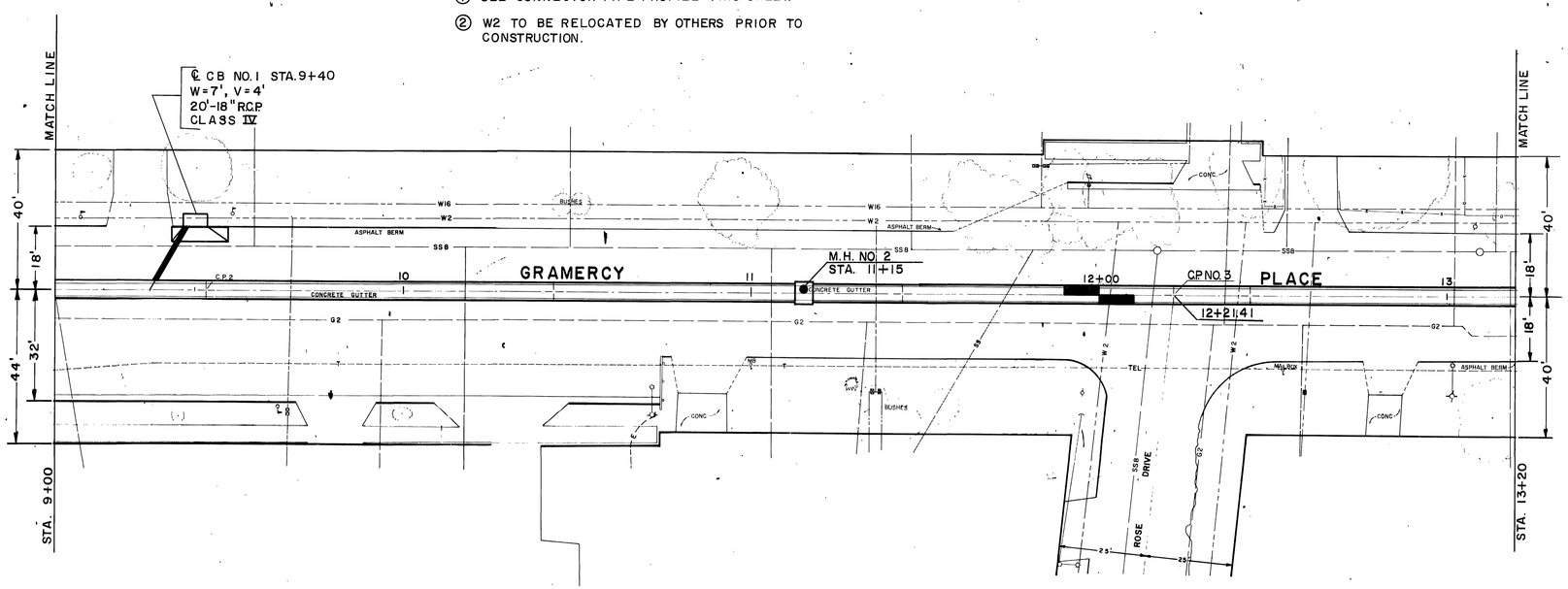

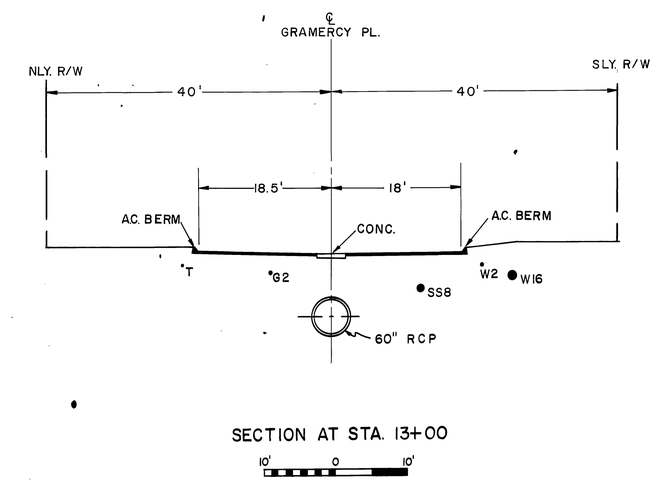

SECTION AT STA. 13+00

10' 0 10'

PLAN

1"=20'

20' 0 20'

BENCH MARK CP NO. 3 HOLE CUT IN CONC. AT INTERSECTION ROSE AND GRAMERCY. ELEV. 745.46	REVISIONS	RIVERSIDE COUNTY FLOOD CONTROL AND WATER CONSERVATION DISTRICT	LA SIERRA CHANNEL GRAMERCY PLACE STORM DRAIN STA. 9+00 TO STA. 13+20 1970 STORM DRAIN BOND ISSUE PROJECT NO. 20
SCALE:	No Change	DESIGNED BY: H. D. & C.C.	PROJECT NO. 1-0-067
DATE:	REF. DESCRIPTION APPR. DATE	DRAWN BY: S. Moody	DRAWING NO. 1-297
		DATE DRAWN: 1-9-75	SHEET NO. 3 OF 43
		CHECKED BY: D.M.M.	
		APPROVED BY: John W. Bryant CHIEF ENGINEER R.E. NO. 8822 DATE: 4-21-75	

AS BUILT

D-316

NOTE: CONTRACTOR SHALL PROTECT IN PLACE ALL UTILITIES CROSSING OR PARALLELING THE STORM DRAIN UNLESS OTHERWISE NOTED.

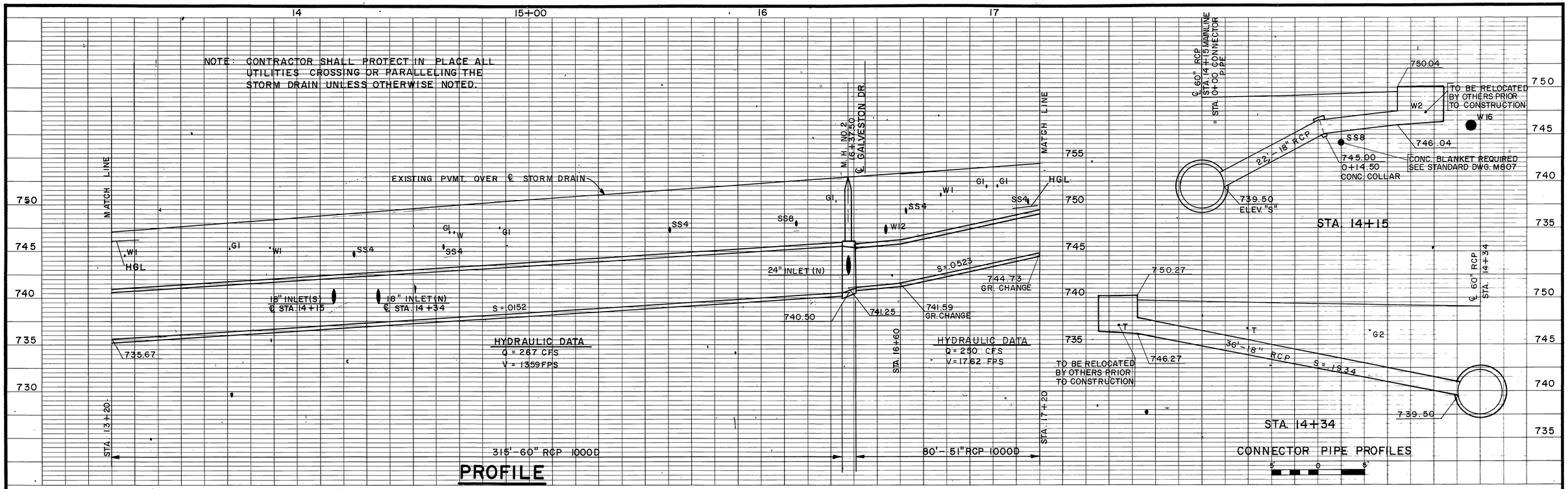

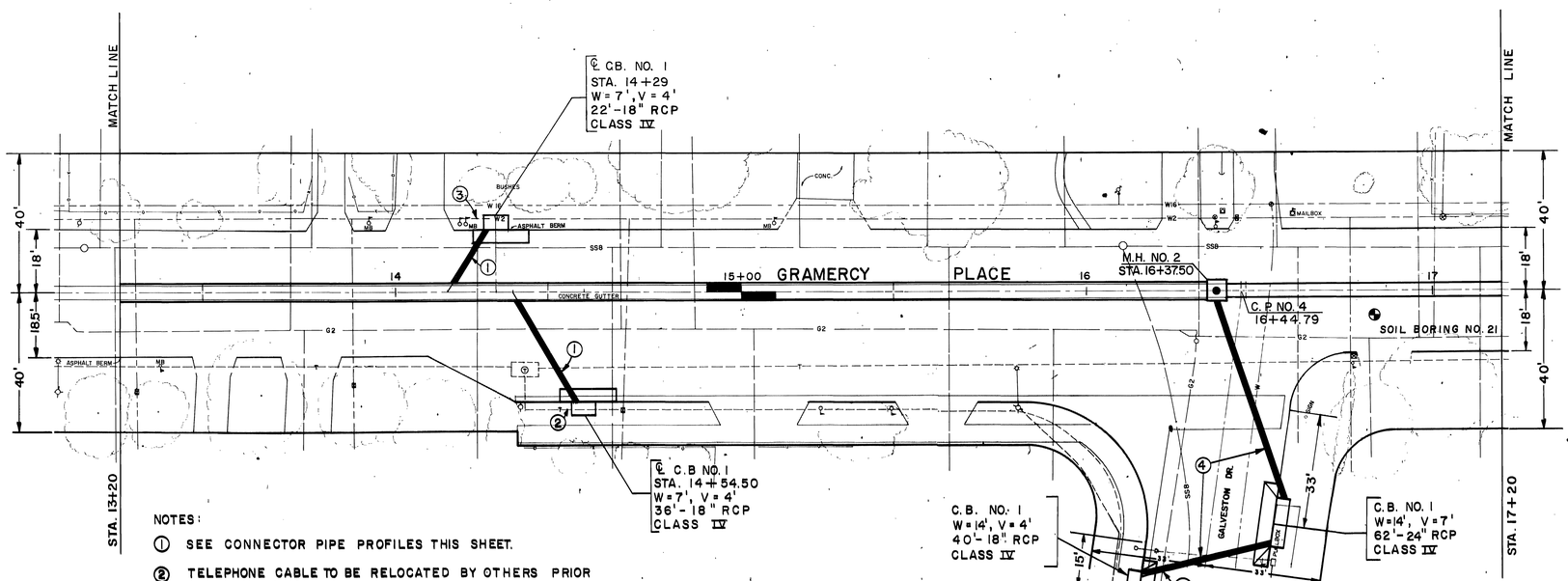

NOTES:

1. SEE CONNECTOR PIPE PROFILES THIS SHEET.
2. TELEPHONE CABLE TO BE RELOCATED BY OTHERS PRIOR TO CONSTRUCTION.
3. W2 TO BE RELOCATED BY OTHERS PRIOR TO CONSTRUCTION.
4. SEE CONNECTOR PIPE PROFILE SHEET NO. 19.
5. G2 TO BE RELOCATED BY OTHERS PRIOR TO CONSTRUCTION.

PLAN

1" = 20'

20' 0 20'

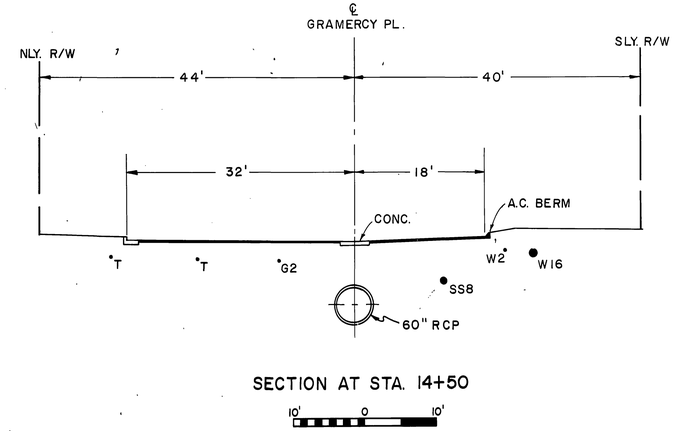

SECTION AT STA. 14+50

BENCH MARK: C.P. NO 4 NAIL & TAG R.E. 9876 AT INTERSECTION OF GRAMERCY & GALVESTON DR. ELEV. 753.04

REVISIONS			
REF.	DESCRIPTION	APPR.	DATE
	No Change		

AS BUILT

RIVERSIDE COUNTY FLOOD CONTROL AND WATER CONSERVATION DISTRICT

DESIGNED BY: H. D. & C. C.
DRAWN BY: J. Moody
DATE DRAWN: 1-9-75
CHECKED BY: D. M. M.
APPROVED BY: John W. Benedict
CHIEF ENGINEER R/E. NO. 8822
DATE: 4-21-75

LA SIERRA CHANNEL
GRAMERCY PLACE
STORM DRAIN
STA. 13+20 TO STA. 17+20
1970 STORM DRAIN BOND ISSUE PROJECT NO. 20

PROJECT NO. 1-0-067
DRAWING NO. 1-297
SHEET NO. 4 OF 43

D-316

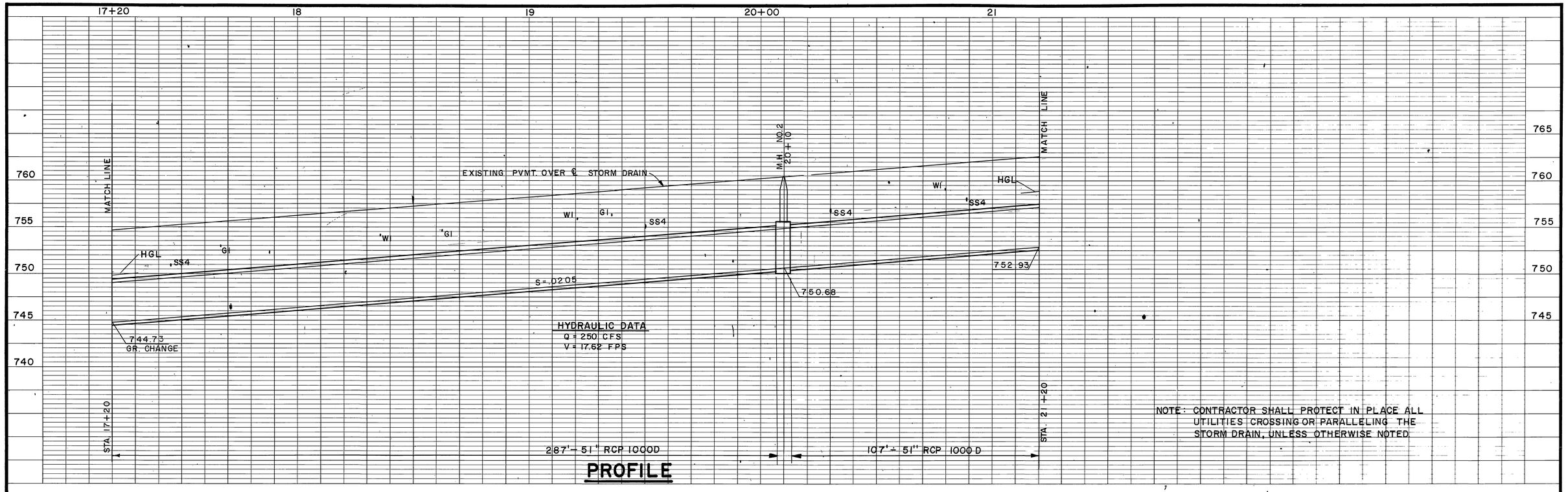

PROFILE

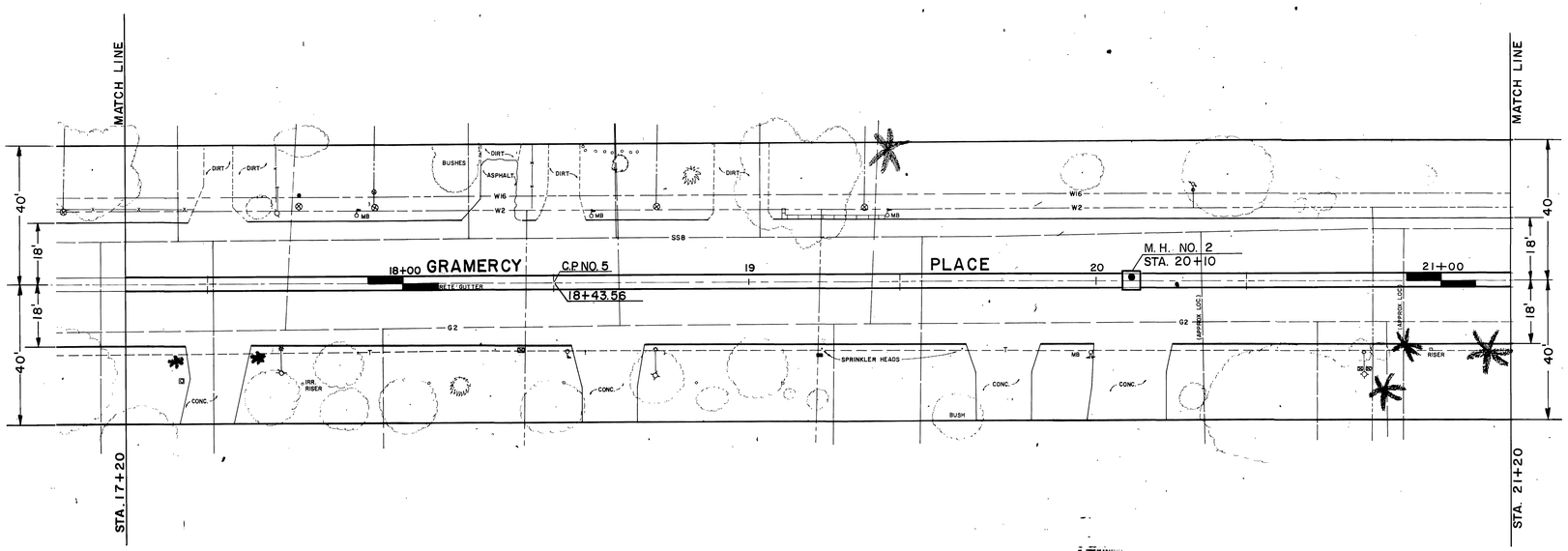

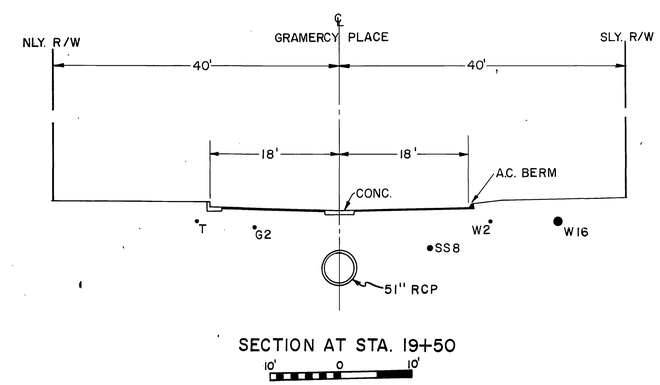

SECTION AT STA. 19+50

PLAN

1" = 20'

20' 0 20'

BENCH MARK C.P. NO. 5 CROSS CUT IN CONC. ℄ GRAMERCY PL.	REVISIONS	RIVERSIDE COUNTY FLOOD CONTROL AND WATER CONSERVATION DISTRICT	LA SIERRA CHANNEL GRAMERCY PLACE
ELEV. 756.98		DESIGNED BY: H. D.&C.C.	STORM DRAIN
SCALE:		DRAWN BY: S. Moody	STA. 17+20 TO STA. 21+20
		DATE DRAWN: 1-10-75	1970 STORM DRAIN BOND ISSUE PROJECT NO. 20
DATE:	No Change	CHECKED BY: D.M.M.	PROJECT NO. 1-0-067
	REF. / DESCRIPTION / APPR. / DATE	APPROVED BY: John W. Bryant, CHIEF ENGINEER R/E. NO. 8822	DRAWING NO. 1-297
		DATE: 4-21-75	SHEET NO. 5 OF 43

AS BUILT

D-316

NOTE: CONTRACTOR SHALL PROTECT IN PLACE ALL UTILITIES CROSSING OR PARALLELING THE STORM DRAIN, UNLESS OTHERWISE NOTED.

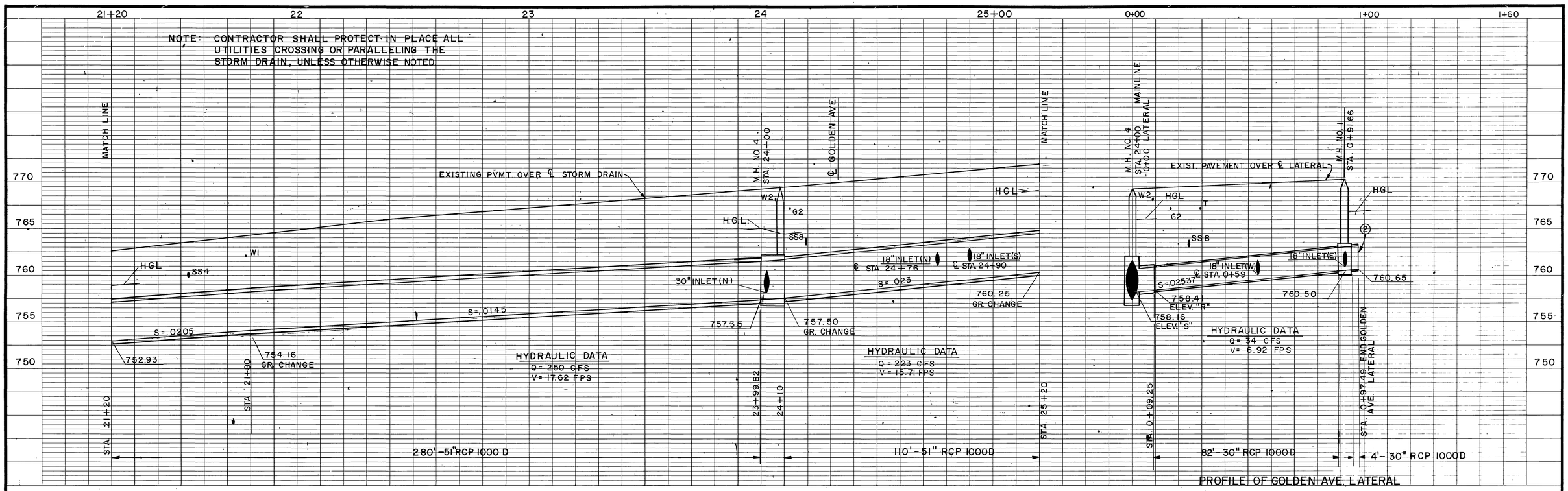

NOTES:

1. CONNECTOR PIPE PROFILES SHEET NO. 19
2. PLUG
3. REMOVE & REPLACE INTERFERING PORTIONS OF EXIST. FENCE.
4. J.S. NO. 2
   A= 65° B= 18" C= 3'-0" D= 30"
   E= 1'-11" F= 0'-10" G= 0'-11" L= 3'-0"
   ELEV. "R"= 760.60 ELEV. "S"= 760.20
5. W2 TO BE RELOCATED BY OTHERS PRIOR TO CONSTRUCTION.
6. ~~G2 TO BE RELOCATED BY OTHERS PRIOR TO CONSTRUCTION.~~
7. TELEPHONE CABLE TO BE RELOCATED BY OTHERS PRIOR TO CONSTRUCTION.

C1. Slope C.B to avoid G2

GOLDEN AVE. LATERAL
℄ CURVE DATA
A = 68° 30' 00"
R = 22.50'
L = 26.90'
T = 15.32'
B.C. = 0+14.81
E.C. = 0+41.71

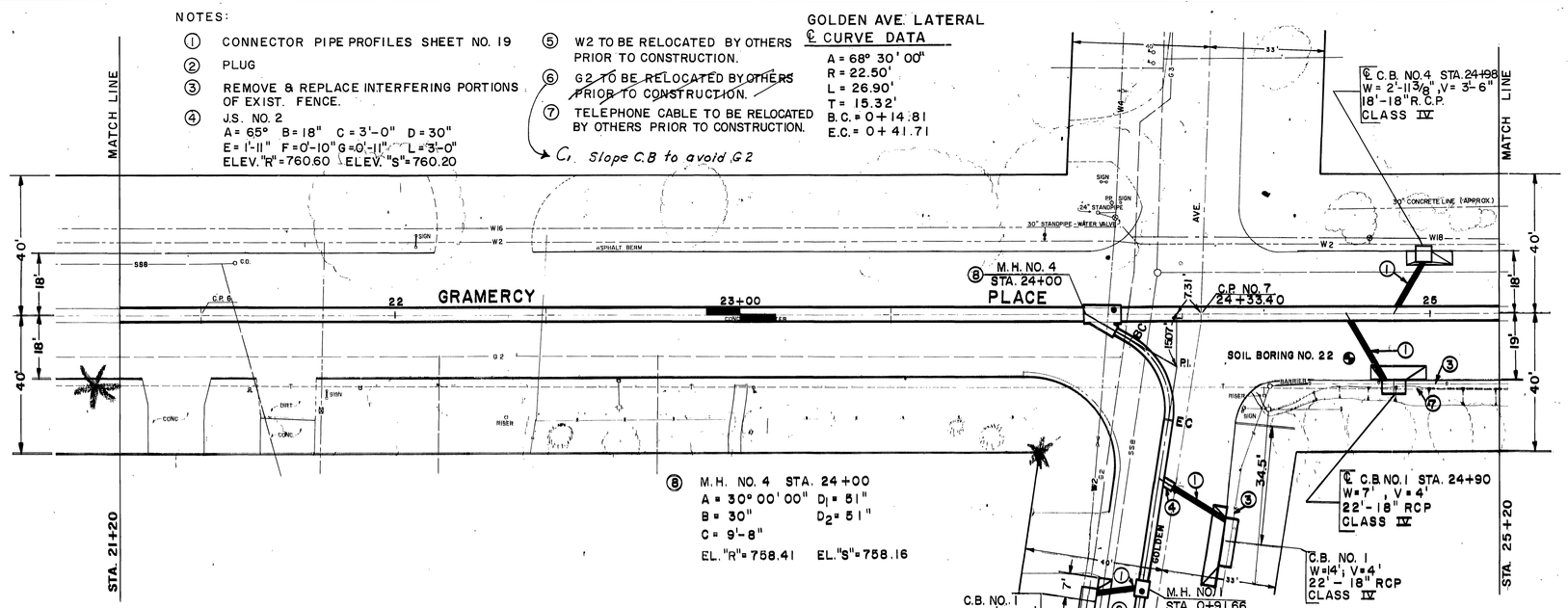

M.H. NO. 4 STA. 24+00
A = 30° 00' 00" D1 = 51"
B = 30" D2 = 51"
C = 9'-8"
EL. "R"= 758.41 EL. "S"= 758.16

PLAN

1"=20'

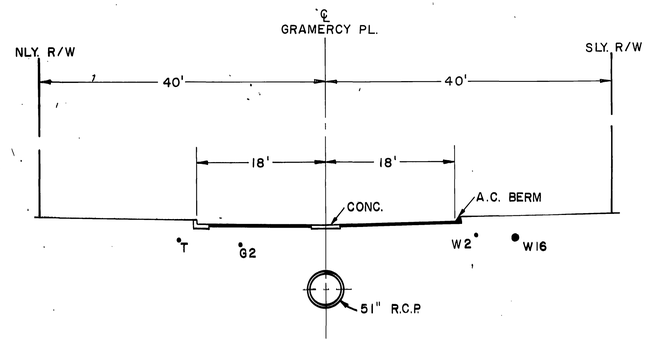

SECTION AT STA. 22+50

1'=10'

BENCH MARK: C.P. NO. 7 P.K. NAIL AT INTERSECTION OF GOLDEN & GRAMERCY. ELEV. 769.95.

REVISIONS			
C1	Change Note 6		1-26
REF.	DESCRIPTION	APPR.	DATE

AS BUILT

RIVERSIDE COUNTY FLOOD CONTROL AND WATER CONSERVATION DISTRICT

DESIGNED BY: H.D.& C.C.
DRAWN BY: S. Moody
DATE DRAWN: 1-10-75
CHECKED BY: D.M.M.
APPROVED BY: John W. Bergquist
CHIEF ENGINEER R/E. NO. 8822
DATE: 4-21-75

LA SIERRA CHANNEL
GRAMERCY PLACE
STORM DRAIN
STA. 21+20 TO STA. 25+20
1970 STORM DRAIN BOND ISSUE PROJECT NO. 20

INDEX UE
PROJECT NO. 1-0-067
DRAWING NO. 1-297
SHEET NO. 6 OF 43

D-316

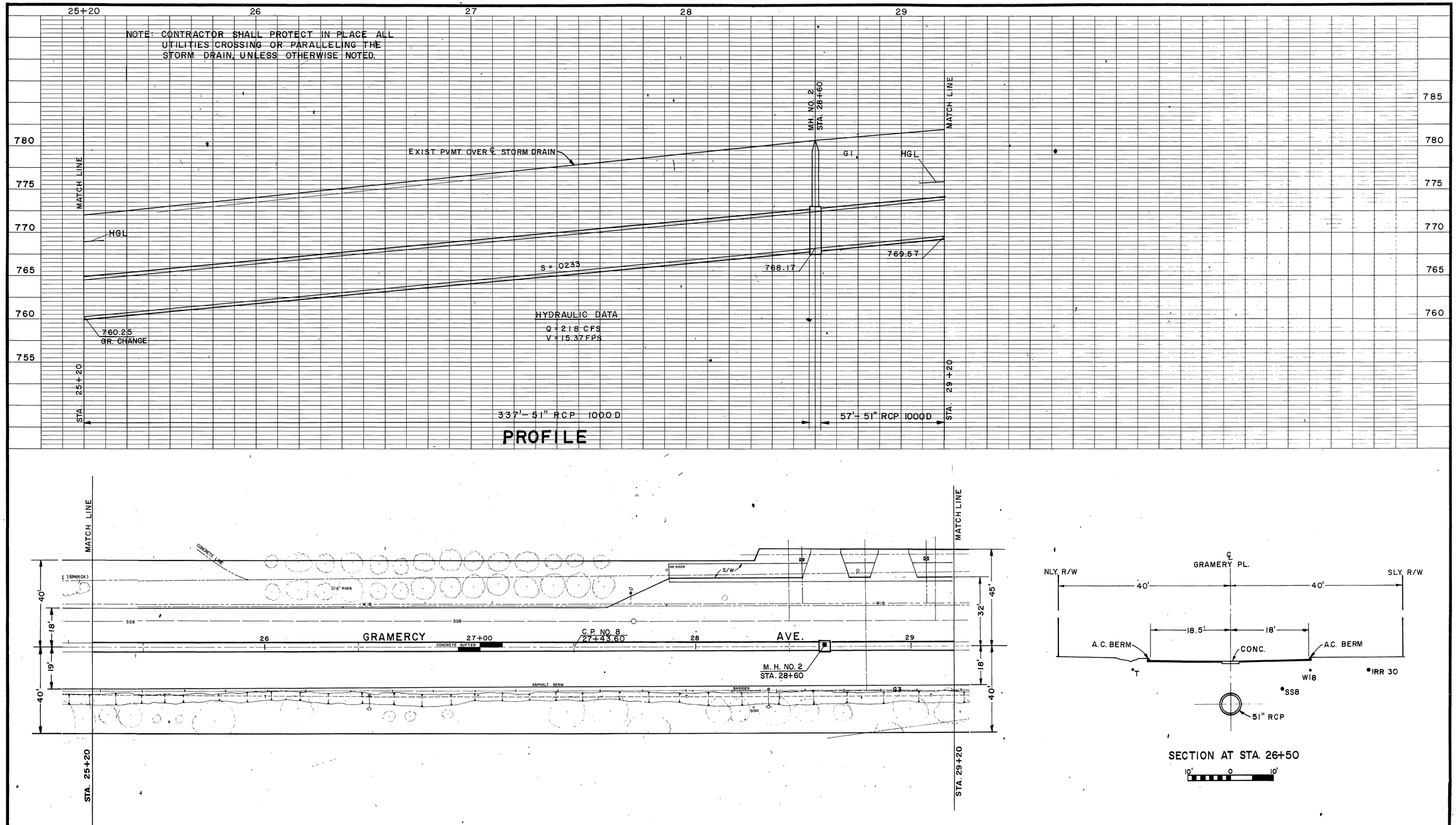

BENCH MARK C.P. NO. 8 CROSS CUT IN CONC. ℄ GRAMERCY PL. ELEV. 777.86	REVISIONS	RIVERSIDE COUNTY FLOOD CONTROL AND WATER CONSERVATION DISTRICT	LA SIERRA CHANNEL GRAMERCY PLACE STORM DRAIN STA 25+20 TO STA. 29+20 1970 STORM DRAIN BOND ISSUE PROJECT NO. 20	INDEX LF PROJECT NO. 1-0-067
SCALE:	No Change	DESIGNED BY: H. D. & C.C. DRAWN BY: S. Moody DATE DRAWN: 1-10-75 CHECKED BY: D. M.M.	APPROVED BY: John W. Bergquist CHIEF ENGINEER R.E. NO. 8822 DATE: 4-21-75	DRAWING NO. 1-297
DATE:	REF. DESCRIPTION APPR. DATE			SHEET NO. 7 OF 43

AS BUILT

D-316

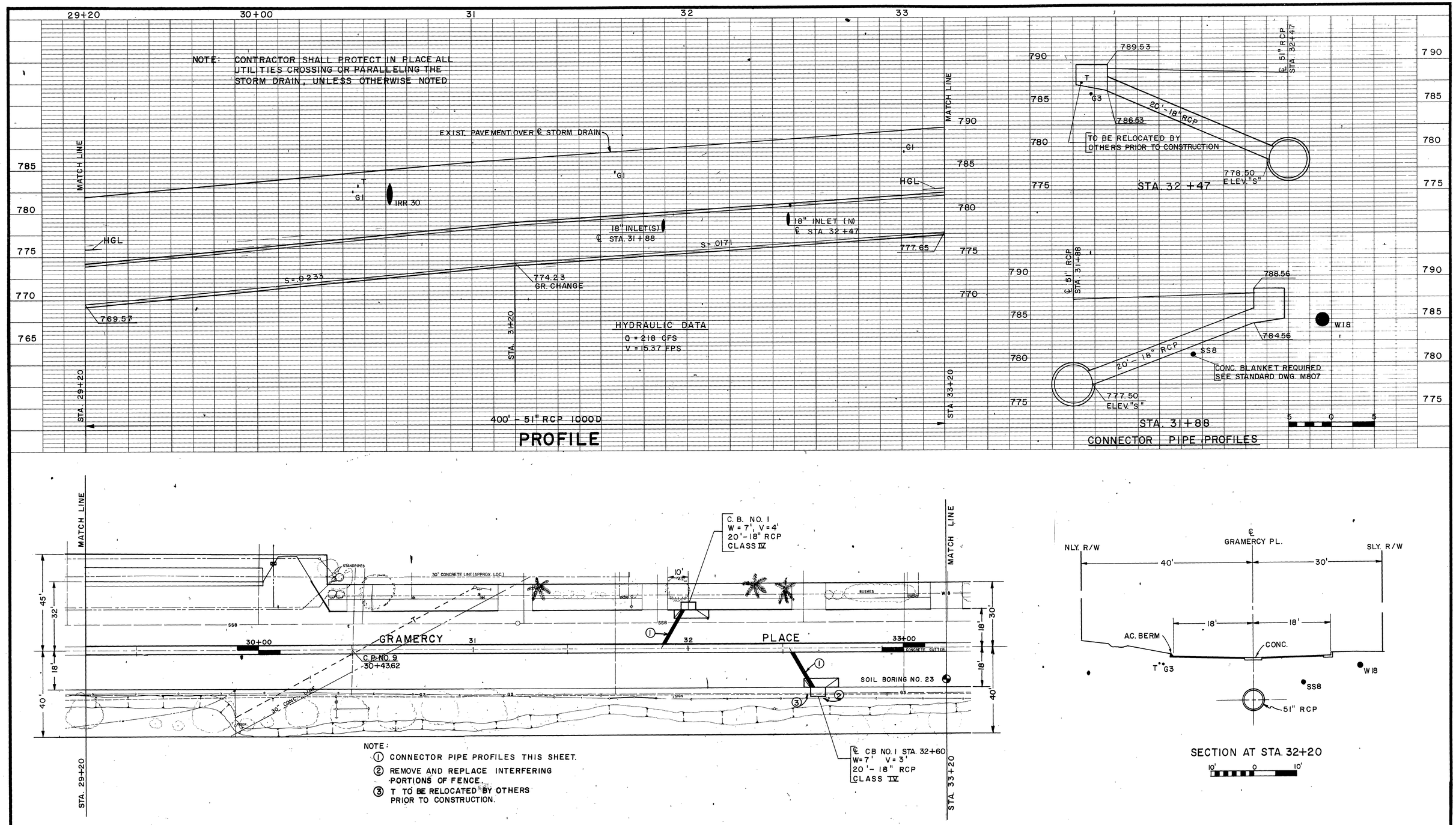

NOTE:
1. CONNECTOR PIPE PROFILES THIS SHEET.
2. REMOVE AND REPLACE INTERFERING PORTIONS OF FENCE.
3. T TO BE RELOCATED BY OTHERS PRIOR TO CONSTRUCTION.

SECTION AT STA. 32+20

PLAN

1"=20'

BENCH MARK C.P. NO. 9 CROSS CUT IN CONC. ℄ GRAMERCY PLACE. ELEV. 784.85	REVISIONS	RIVERSIDE COUNTY FLOOD CONTROL AND WATER CONSERVATION DISTRICT	LA SIERRA CHANNEL GRAMERCY PLACE STORM DRAIN STA. 29+20 TO STA. 33+20 1970 STORM DRAIN BOND ISSUE PROJECT NO. 20
SCALE:	No Change	DESIGNED BY: H.D.& C.C. DRAWN BY: S. Moody DATE DRAWN: 1-22-75 CHECKED BY: D.M.M.	APPROVED BY: John W. Bryant CHIEF ENGINEER R.E. NO. 8822 DATE: 4-21-75
DATE:	REF. DESCRIPTION APPR. DATE		

INDEX LF

PROJECT NO. 1-0-067

DRAWING NO. 1-297

SHEET NO. 8 OF 43

AS BUILT

D-316

NOTE: CONTRACTOR SHALL PROTECT IN PLACE ALL UTILITIES CROSSING OR PARALLELING THE STORM DRAIN, UNLESS OTHERWISE NOTED.

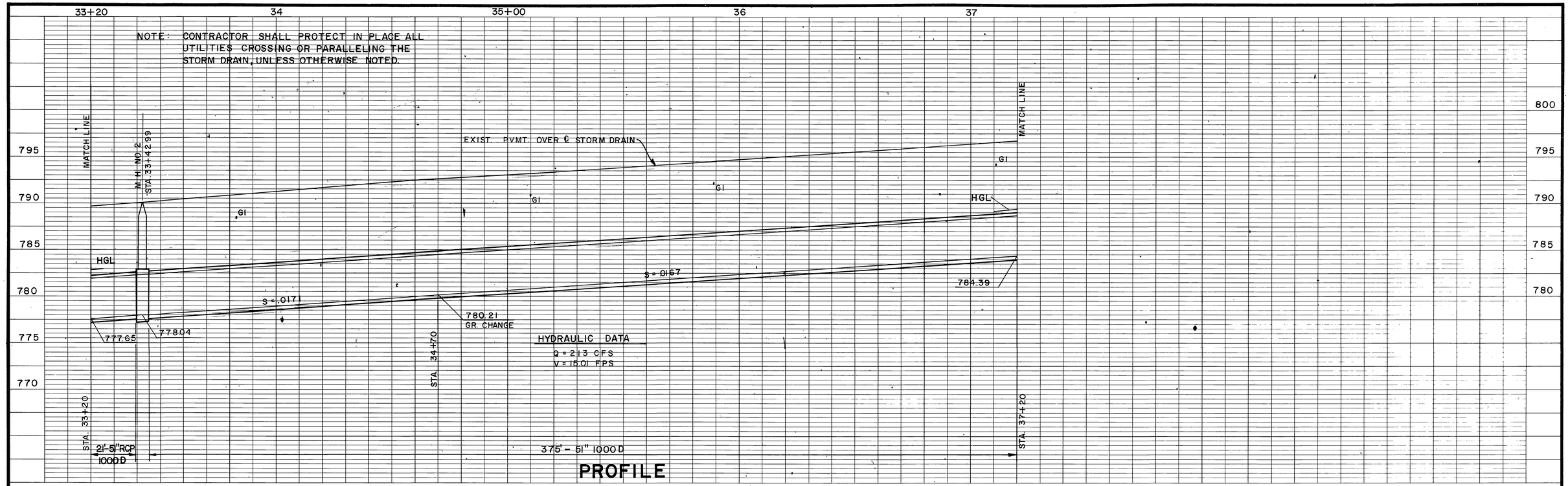

PROFILE

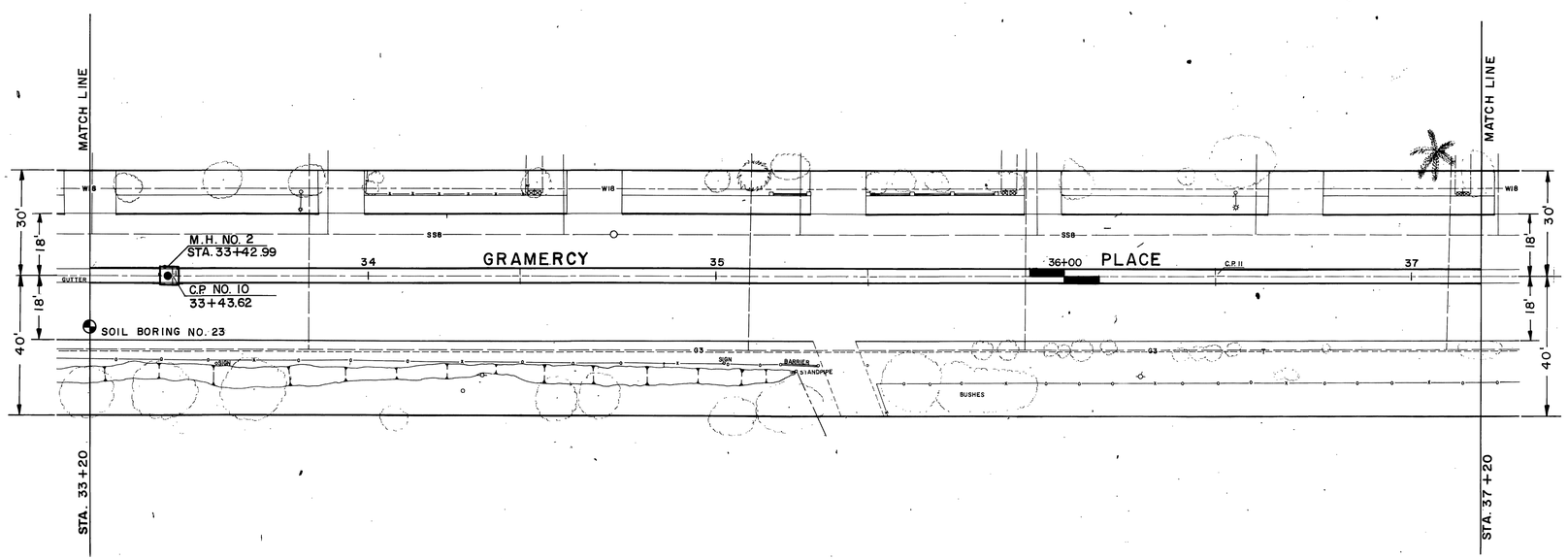

PLAN

1" = 20'

20' 0 20'

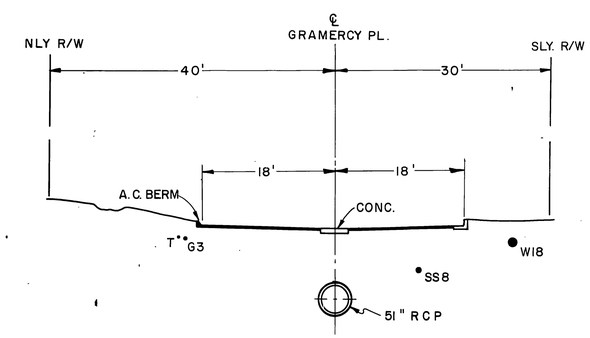

SECTION AT STA. 35+00

10' 0 10'

BENCH MARK C.P. NO. 10 · CROSS CUT IN CONCRETE ℄ GRAMERCY PL. ELEV. 790.23	REVISIONS	RIVERSIDE COUNTY FLOOD CONTROL AND WATER CONSERVATION DISTRICT	LA SIERRA CHANNEL GRAMERCY PLACE STORM DRAIN STA. 33+20 TO STA. 37+20 1970 STORM DRAIN BOND ISSUE PROJECT NO. 20
SCALE:		DESIGNED BY: H. D. & C.C.	PROJECT NO. 1-0-067
		DRAWN BY: S. Moody	DRAWING NO. 1-297
		DATE DRAWN: 3-24-75	SHEET NO. 9 OF 43
DATE:	No Change	CHECKED BY: D.M.M.	
	REF. / DESCRIPTION / APPR. / DATE	APPROVED BY: John W. Bryant, CHIEF ENGINEER R.E. NO. 8822 DATE: 4-21-75	

INDEX UP

AS BUILT

D-316

NOTE: CONTRACTOR SHALL PROTECT IN PLACE ALL UTILITIES CROSSING OR PARALLELING THE STORM DRAIN, UNLESS OTHERWISE NOTED.

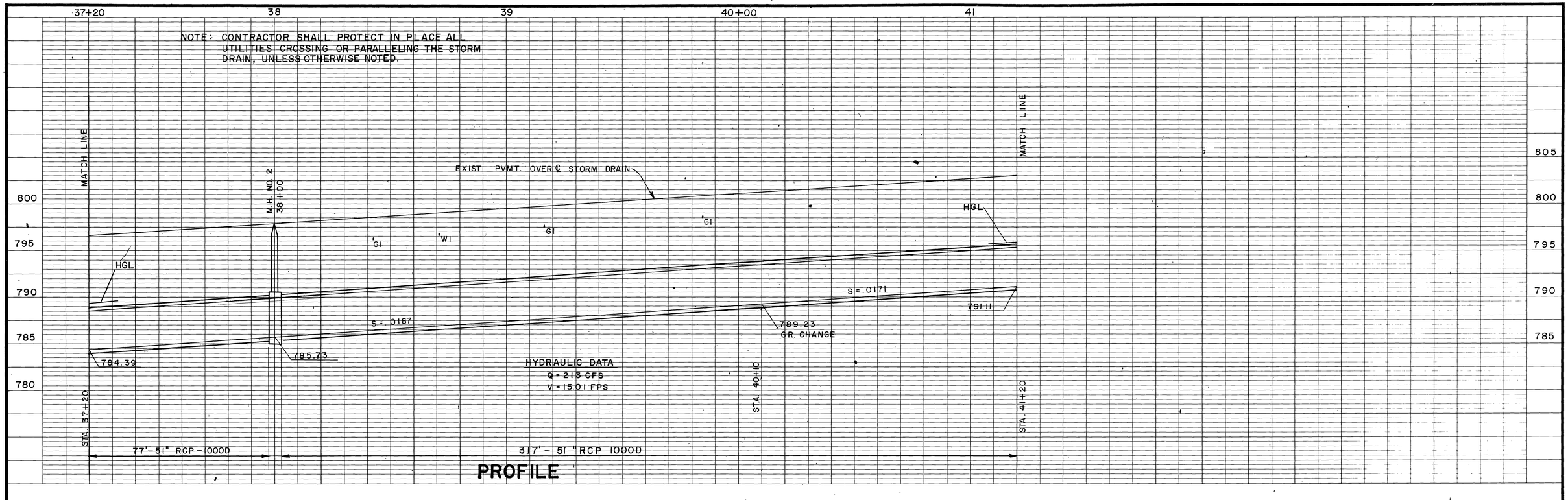

PROFILE

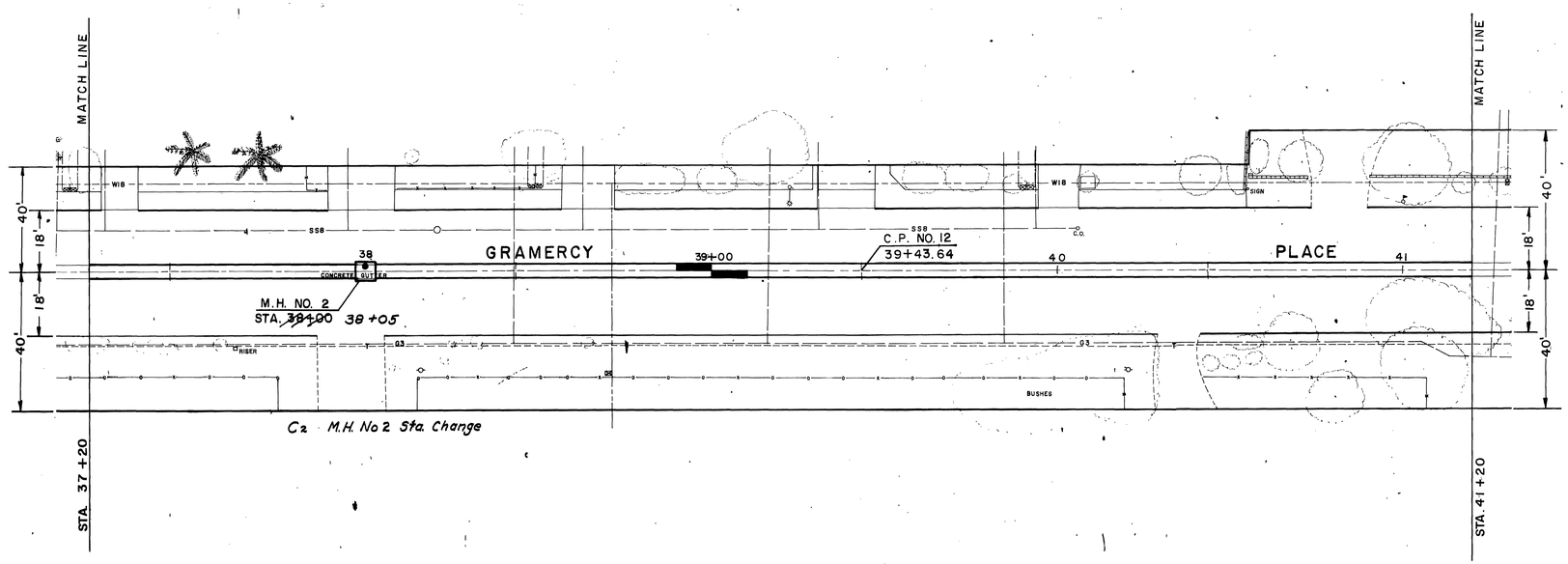

PLAN

1" = 20'

20' 0 20'

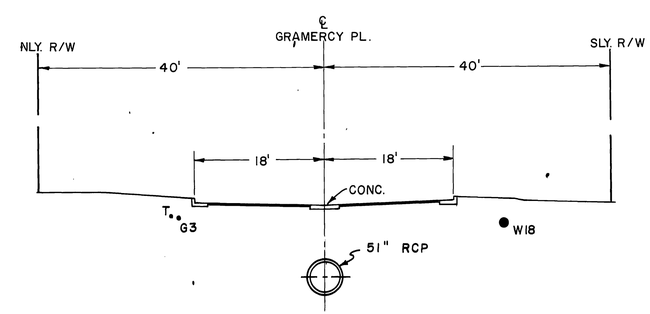

SECTION AT STA. 41+00

10' 0 10'

BENCH MARK C.P. NO. 12 CROSS CUT IN CONCRETE ℄ GRAMERCY PL. ELEV. 800.32	REVISIONS	RIVERSIDE COUNTY FLOOD CONTROL AND WATER CONSERVATION DISTRICT	LA SIERRA CHANNEL GRAMERCY PLACE STORM DRAIN STA. 37+20 TO STA. 41+20 1970 STORM DRAIN BOND ISSUE PROJECT NO. 20
SCALE:		DESIGNED BY: H.D. & C.C. DRAWN BY: J. Moody DATE DRAWN: 3-24-75 CHECKED BY: D.M.M.	PROJECT NO. 1-0-067 DRAWING NO. 1-297
DATE:	C2 M.H. No. 2 Sta. Change — 4/M 1-76	APPROVED BY: John W. Bragg CHIEF ENGINEER R.E./NO. 8822 DATE: 4-21-75	SHEET NO. 10 OF 43
	REF. DESCRIPTION APPR. DATE		

AS BUILT

INDEX UP

D-316

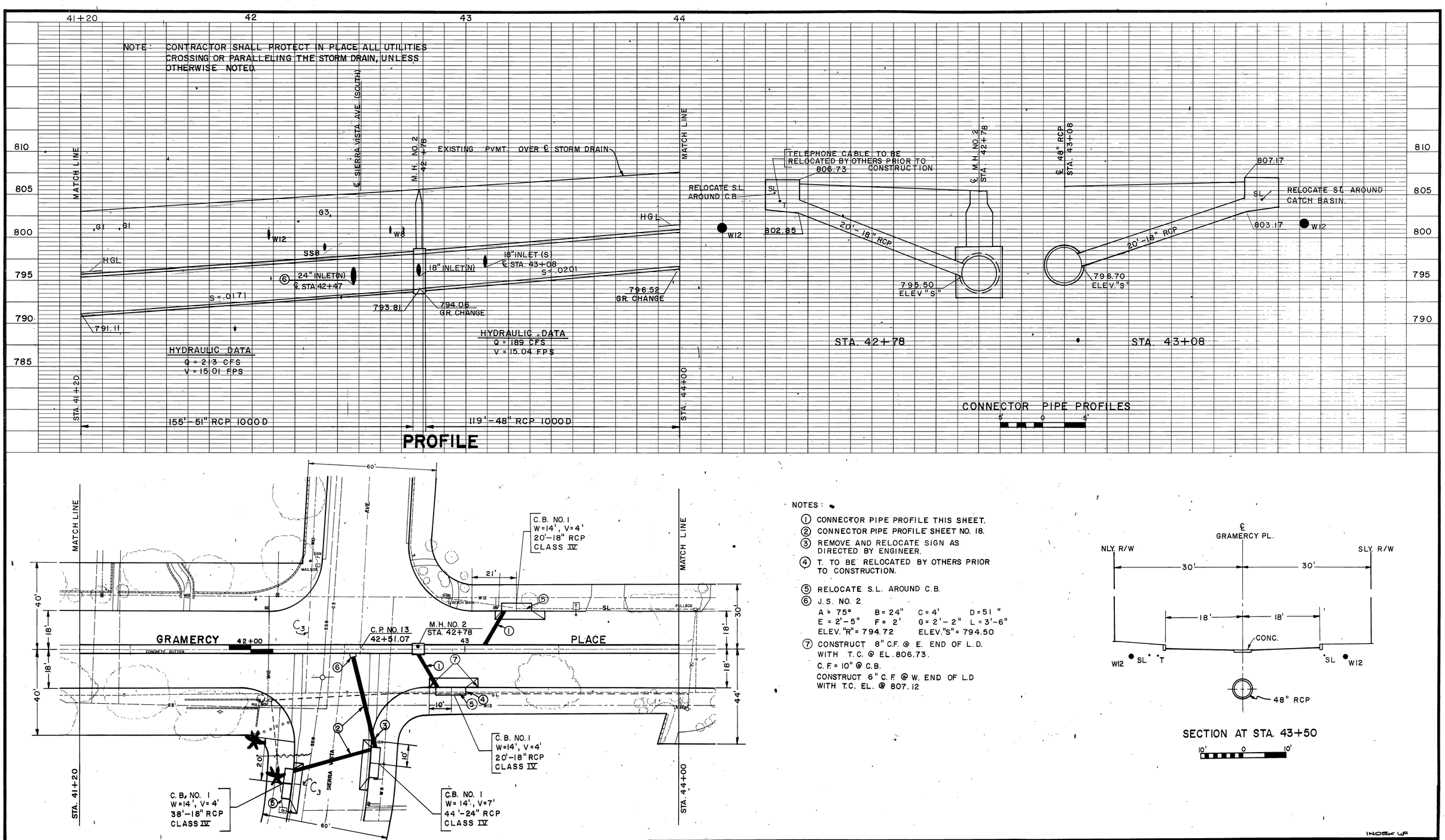

NOTES:

1. CONNECTOR PIPE PROFILE THIS SHEET.
2. CONNECTOR PIPE PROFILE SHEET NO. 18.
3. REMOVE AND RELOCATE SIGN AS DIRECTED BY ENGINEER.
4. T. TO BE RELOCATED BY OTHERS PRIOR TO CONSTRUCTION.
5. RELOCATE S.L. AROUND C.B.
6. J.S. NO. 2
   A = 75° B = 24" C = 4' D = 51"
   E = 2'-5" F = 2' G = 2'-2" L = 3'-6"
   ELEV. "R" = 794.72 ELEV. "S" = 794.50
7. CONSTRUCT 8" C.F. @ E. END OF L.D. WITH T.C. @ EL. 806.73.
   C.F. = 10" @ C.B.
   CONSTRUCT 6" C.F. @ W. END OF L.D WITH T.C. EL. @ 807.12

SECTION AT STA. 43+50

10' 0 10'

BENCH MARK C.P. NO. 13 CROSS CUT IN CONC. AT INTERSECTION SIERRA VISTA SOUTH & GRAMERCY. ELEV. 805.43	REVISIONS			RIVERSIDE COUNTY FLOOD CONTROL AND WATER CONSERVATION DISTRICT	LA SIERRA CHANNEL GRAMERCY PLACE STORM DRAIN STA. 41+20 TO STA. 44+00 1970 STORM DRAIN BOND ISSUE PROJECT NO. 20	PROJECT NO. 1-0-067
SCALE:				DESIGNED BY: H. D. & C.C.		DRAWING NO. 1-297
DATE:	C3 Corrections As Shown	H.M.	6-76	DRAWN BY: S. Mordy	APPROVED BY: John W. Bryant CHIEF ENGINEER R.E. NO. 8822	SHEET NO. 11 OF 43
	REF. DESCRIPTION	APPR.	DATE	DATE DRAWN: 3-24-75	DATE: 4-21-75	
				CHECKED BY: D.M.M.		

INDEX LF

AS BUILT

D-316

NOTE: CONTRACTOR SHALL PROTECT IN PLACE ALL UTILITIES CROSSING OR PARALLELING THE STORM DRAIN, UNLESS OTHERWISE NOTED.

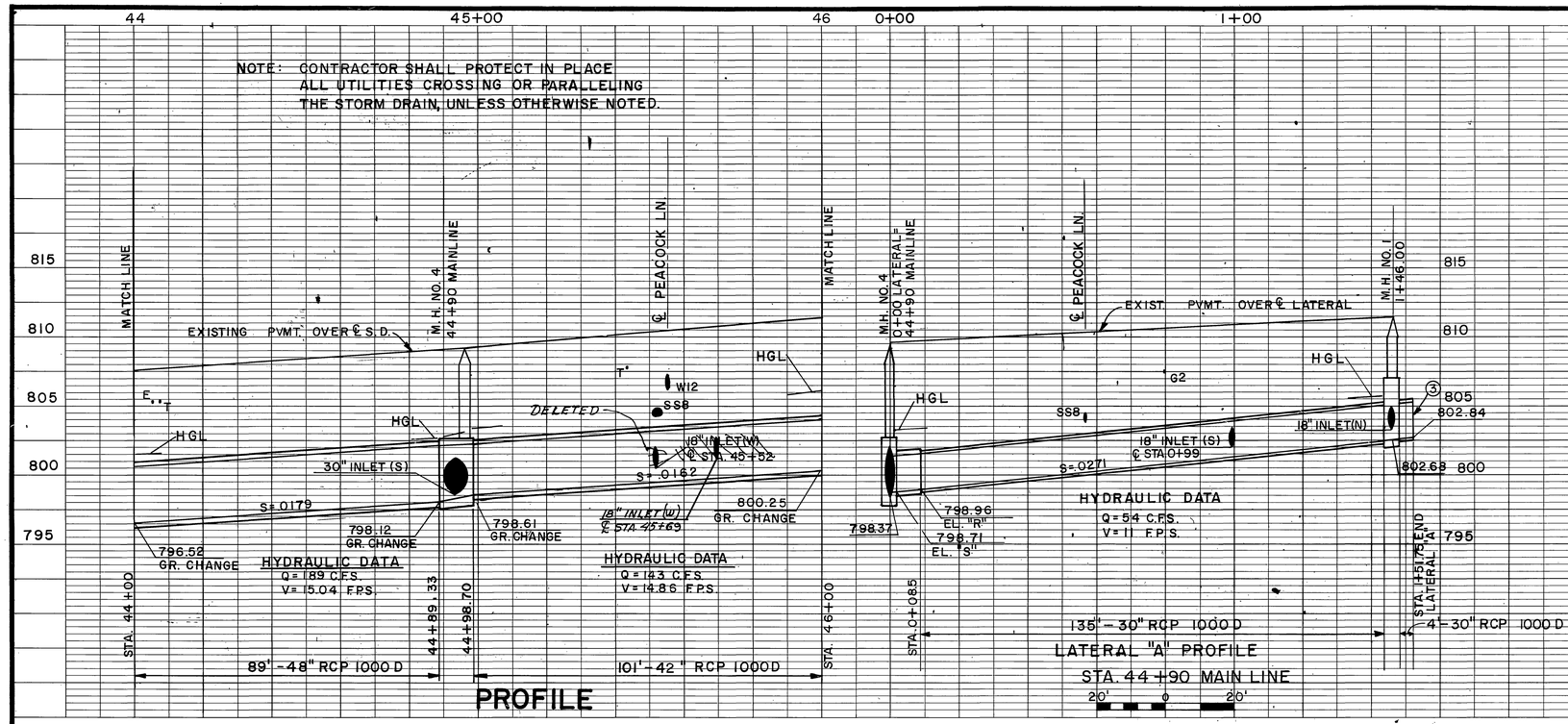

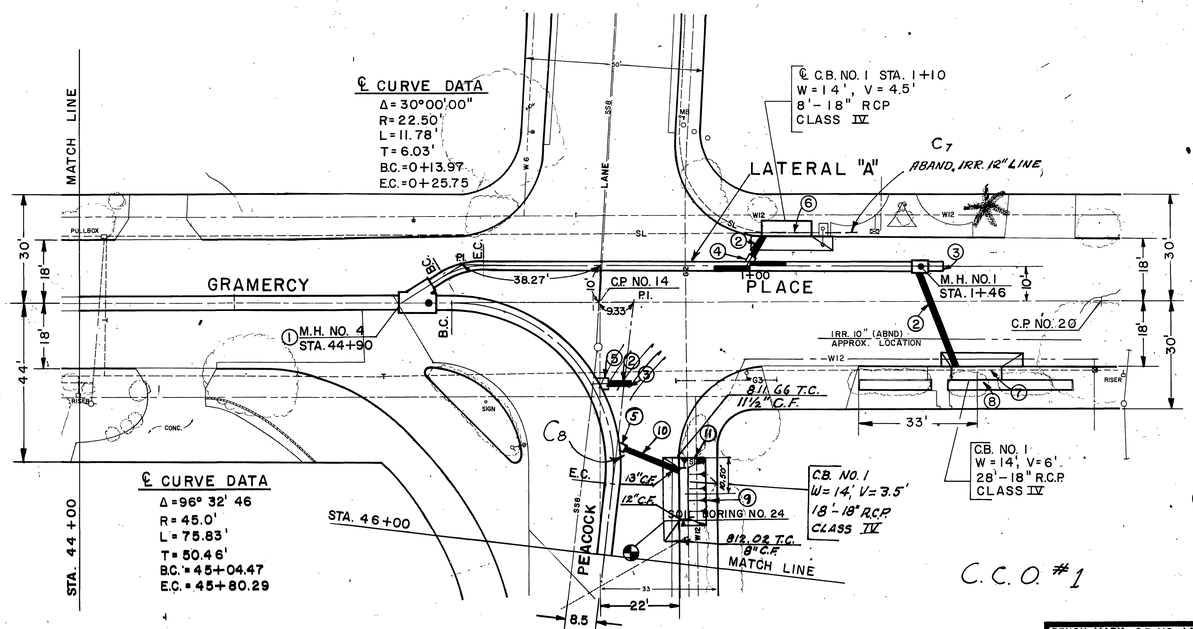

PLAN

1"=20'

20' 0 20'

NOTES:

1. M.H. NO. 4 STA. 44+90
   A = 30°00'00" D_1 = 42"
   B = 30" D_2 = 48"
   C = 9'-0"
   EL. "R" = 798.96
   EL. "S" = 798.71
2. CONNECTOR PIPE PROFILE THIS SHEET.
3. PLUG.
4. J.S. NO. 2
   A = 60° B = 18" C = 3'-5" D = 30"
   E = 2'-2" F = 6" G = 1' L = 3'-0"
   ELEV. "R" = 803.52 ELEV. "S" = 802.20
5. J.S. NO. 2
   A = 60° B = 18" C = 4' D = 42"
   E = 2'-6" F = 1'-~~8~~ 2" G = 1'-~~8~~ 7" L = 3'-0"
   ELEV. "R" = 801.~~55~~ 88 ELEV. "S" = 80~~0.50~~ 0.28
6. RELOCATE S.L. AROUND C.B.
7. T. TO BE RELOCATED BY OTHERS PRIOR TO CONSTRUCTION.
8. THE CONTRACTOR SHALL REPLACE AS DIRECTED ALL JUNIPERS REMOVED OR DAMAGED BY HIS OPERATION BEYOND 1' FROM THE C.B.
9. *Slope dirt in 5' from C.B. to natural ground as shown and replace vegetation as directed.*
10. *Connector pipe profile see sheet 19*
11. *So. Calif. Gas Company will wrap G2 prior to pouring of bottom slab.*

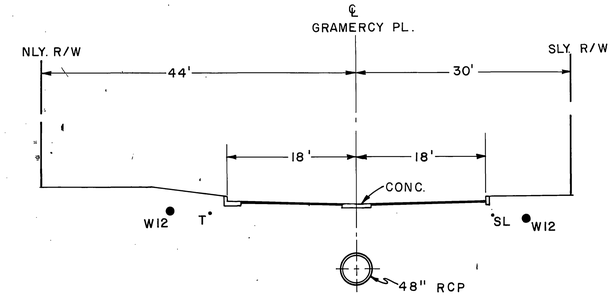

SECTION AT STA. 44+50

10' 0 10'

BENCH MARK C.P. NO. 14 TOP 3/4" I.P. AT INTERSECTION PEACOCK & GRAMERCY. ELEV. 809.80.	REVISIONS			RIVERSIDE COUNTY FLOOD CONTROL AND WATER CONSERVATION DISTRICT	LA SIERRA CHANNEL GRAMERCY PLACE STORM DRAIN STA. 44+00 TO STA. 46+00 1970 STORM DRAIN BOND ISSUE PROJECT NO. 20	PROJECT NO. 1-0-067
SCALE:	NOTE: C7 & C8 = C.C.O. #1			DESIGNED BY: H. D. & C.C. APPROVED BY:		DRAWING NO. 1-297
	C8 J.S. NO. 2 Changes as shown			DRAWN BY: S. Moody		
DATE:	C7 Aband. Irr. 12" Line & Notes added			DATE DRAWN: 3-26-75 CHIEF ENGINEER R.E. NO. 8822		SHEET NO. 12 OF 43
	REF.	DESCRIPTION	APPR. DATE	CHECKED BY: D.M.M. DATE: 4-21-75		

AS BUILT

INDEX 6F

D-316

NOTE: CONTRACTOR SHALL PROTECT IN PLACE ALL UTILITIES CROSSING OR PARALLELING THE STORM DRAIN, UNLESS OTHERWISE NOTED.

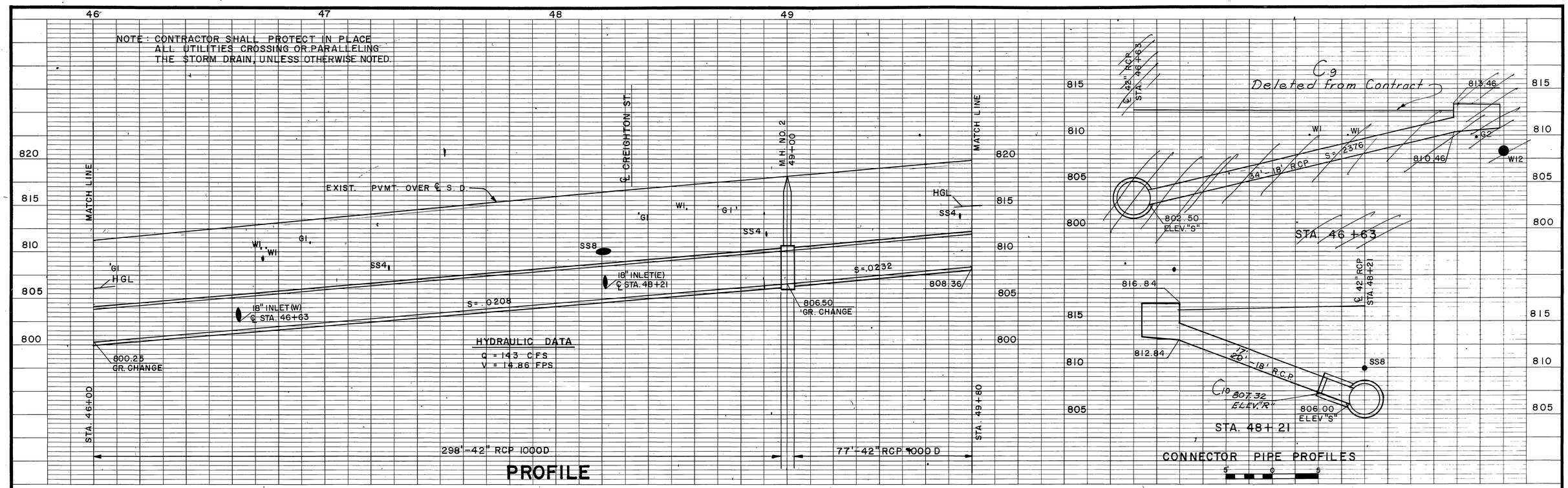

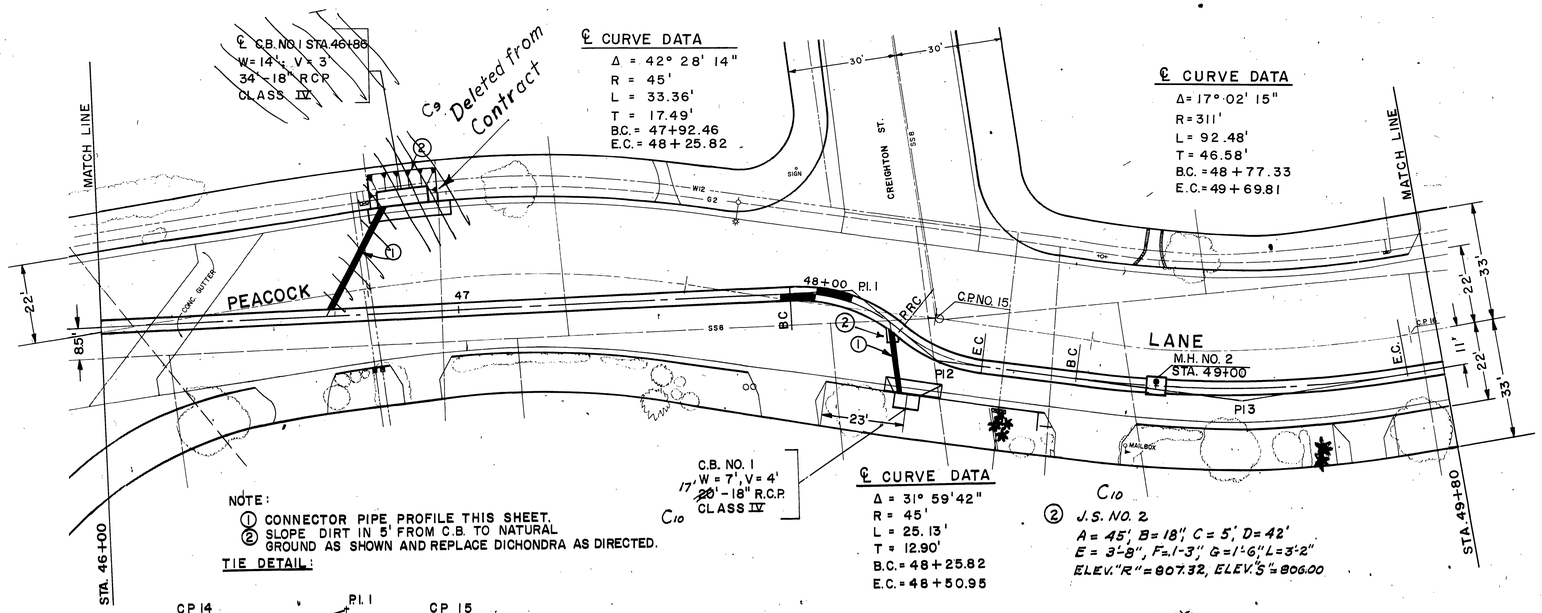

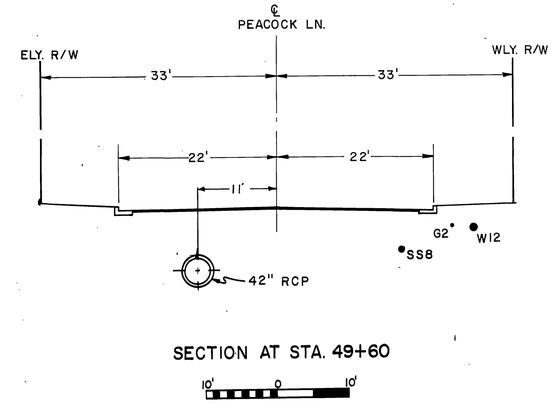

BENCH MARK C.P. NO. 15. CROSS CUT IN S/S RIM OF MH AT INTERSECTION CREIGHTON & PEACOCK. ELEV. 816.67	REVISIONS			RIVERSIDE COUNTY FLOOD CONTROL AND WATER CONSERVATION DISTRICT	LA SIERRA CHANNEL GRAMERCY PLACE STORM DRAIN STA. 46+00 TO STA. 49+80 1970 STORM DRAIN BOND ISSUE PROJECT NO. 20	PROJECT NO. 1-0-067
SCALE:	NOTE C9 & C10 = C.C.O. #1		M.M. 6-76	DESIGNED BY: H. D. & C.C.		DRAWING NO. 1-297
	C10	J.S. No. 2 & C.B. No. 1 added	M.M. 6-76	DRAWN BY: D. Moody		
DATE:	C9	C.B. No. 1 Sta 46+63 deleted	M.M. 6-76	DATE DRAWN: 3-25-76		SHEET NO. 13 OF 43
	REF.	DESCRIPTION	APPR. DATE	CHECKED BY: D.M.M.		

APPROVED BY: John W. Bryant, CHIEF ENGINEER R.E. NO. 8822 — DATE: 4-21-76

AS BUILT

D-316

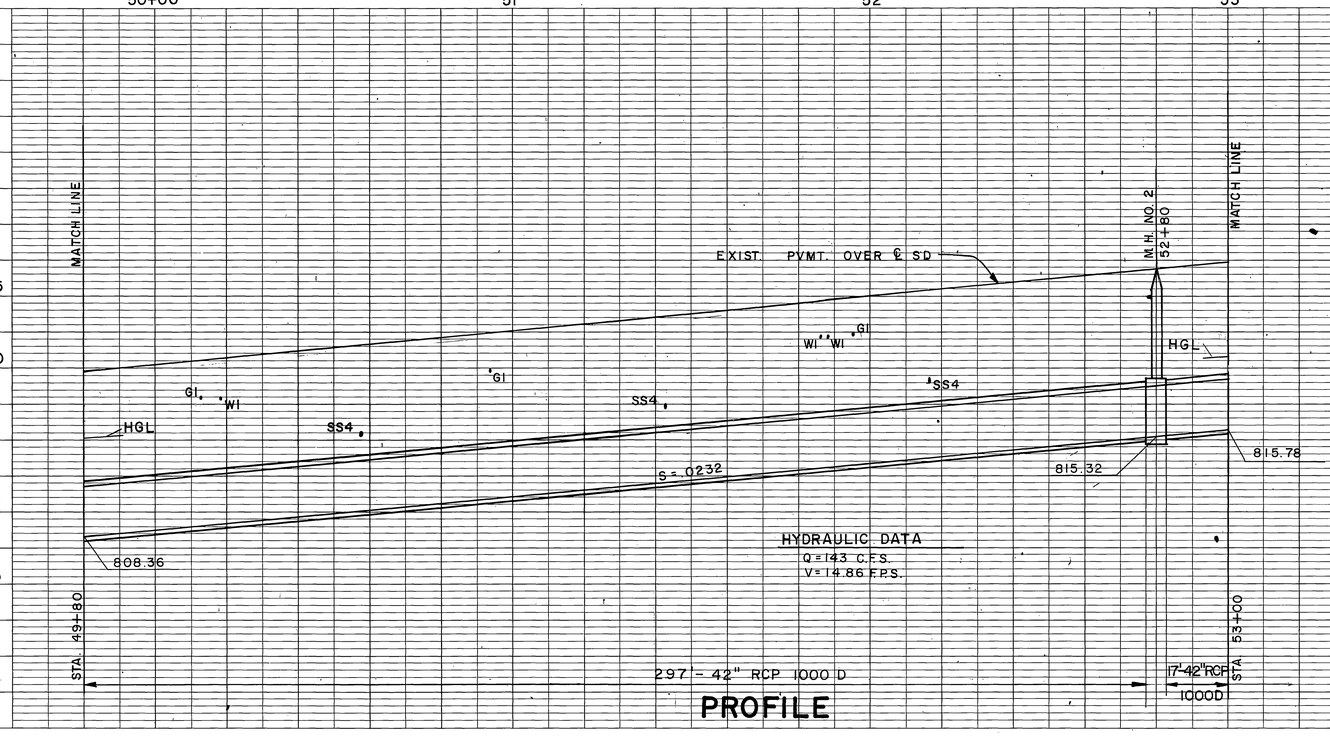

NOTE: CONTRACTOR SHALL PROTECT IN PLACE ALL UTILITIES CROSSING OR PARALLELING THE STORM DRAIN, UNLESS OTHERWISE NOTED.

PROFILE

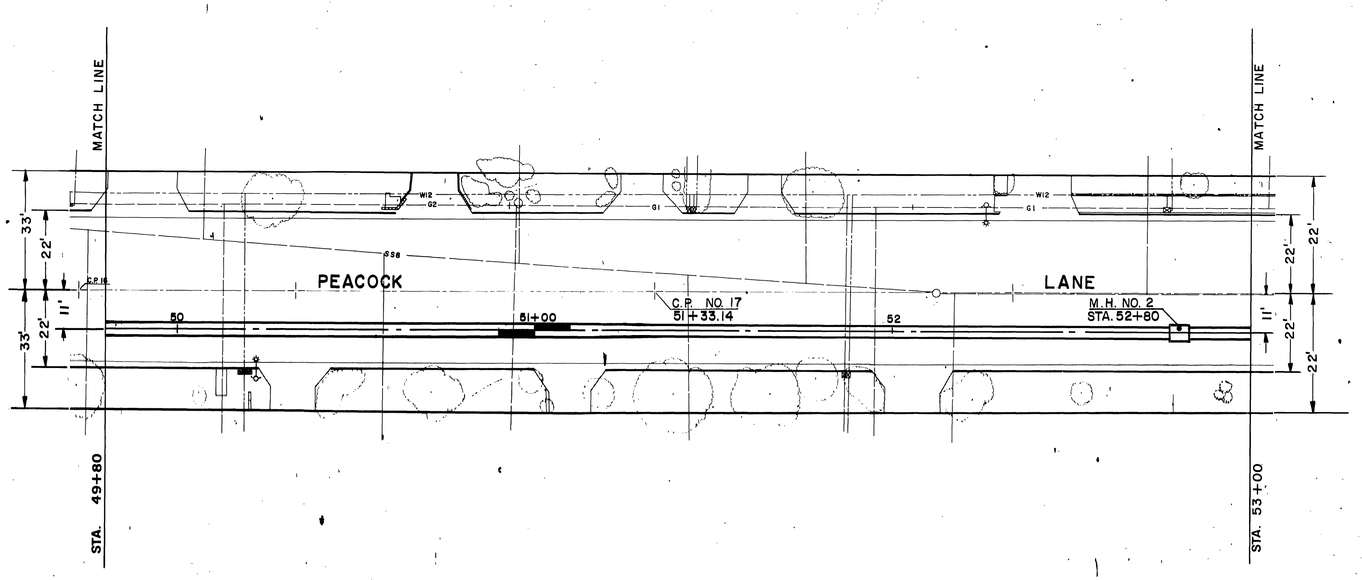

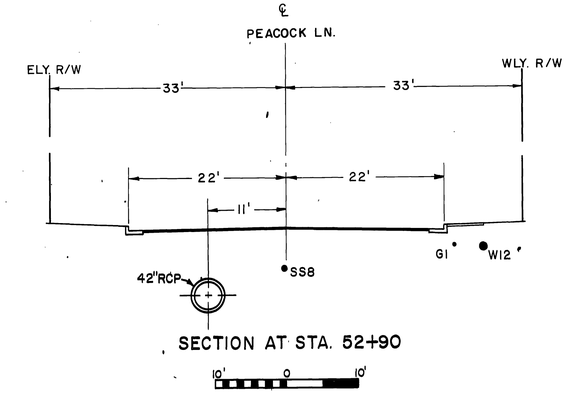

SECTION AT STA. 52+90

PLAN

1"=20'

20' 0 20'

BENCH MARK C.P. NO. 17 N.G.T. ℄ PEACOCK LN. ELEV. 823.46	REVISIONS	RIVERSIDE COUNTY FLOOD CONTROL AND WATER CONSERVATION DISTRICT	LA SIERRA CHANNEL GRAMERCY PLACE STORM DRAIN STA. 49+80 TO STA. 53+00 1970 STORM DRAIN BOND ISSUE PROJECT NO. 20
SCALE:	No. Change	DESIGNED BY: H.D.&C.C.	PROJECT NO. 1-0-067
DATE:	REF. DESCRIPTION APPR. DATE	DRAWN BY: S. Mosby	DRAWING NO. 1-297
		DATE DRAWN: 3-27-75	SHEET NO. 14 OF 43
		CHECKED BY: D.M.M.	
		APPROVED BY: John W. Bryant CHIEF ENGINEER R.E. NO. 8822 DATE: 4-21-75	

AS BUILT

D-316

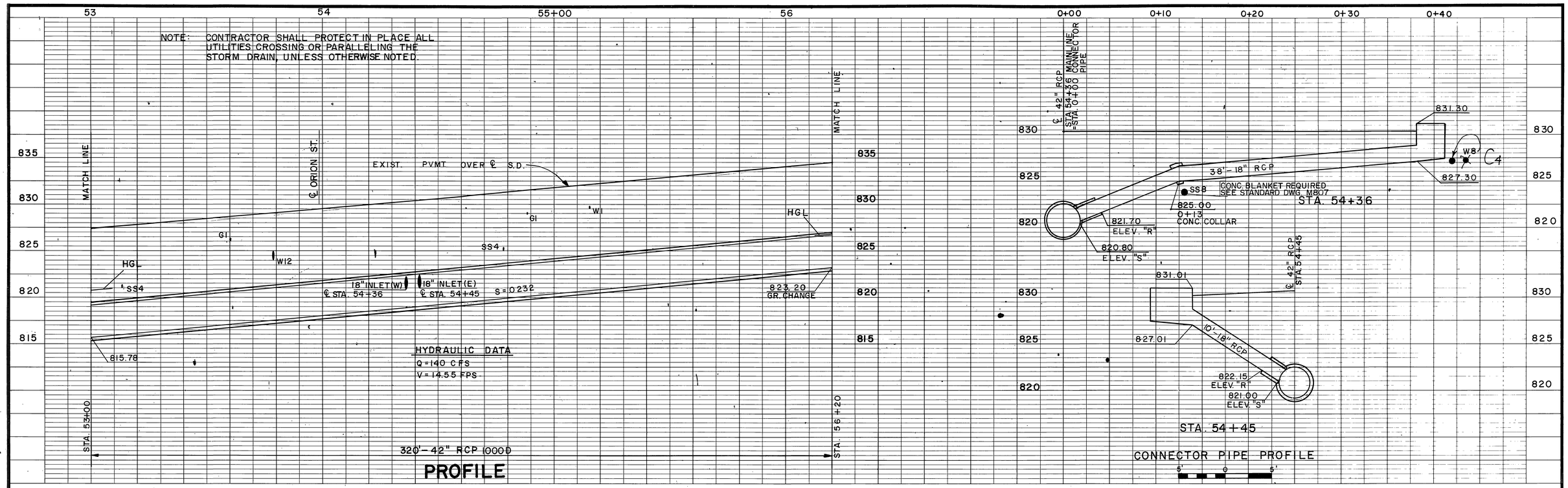

NOTES:

1. CONNECTOR PIPE PROFILE THIS SHEET.
2. J.S. NO. 2
   A = 65° B = 18" C = 3'-10" D = 42"
   E = 2'-2" F = 1'-2" G = 1'-10" L = 3'-0"
   EL."R" = 822.15 EL."S" = 821.00
3. J.S. NO. 2
   A = 60° B = 18" C = 4' D = 42"
   E = 2'-6" F = 1'-2" G = 1'-8" L = 3'
   EL."R" = 821.70 EL."S" = 820.80

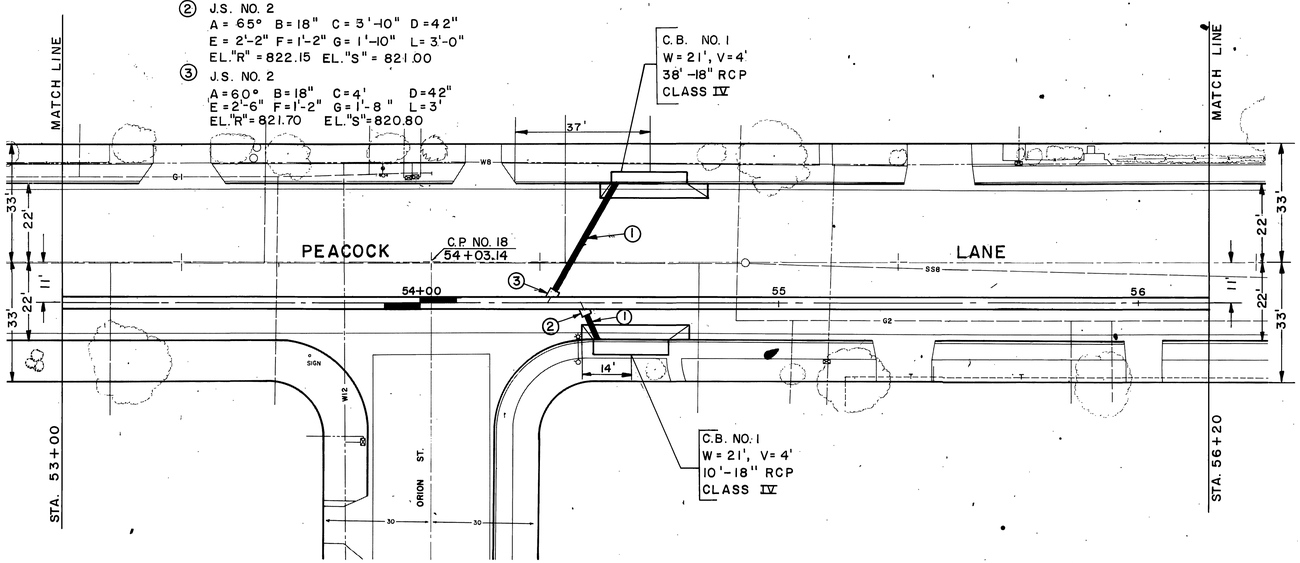

PLAN

1" = 20'

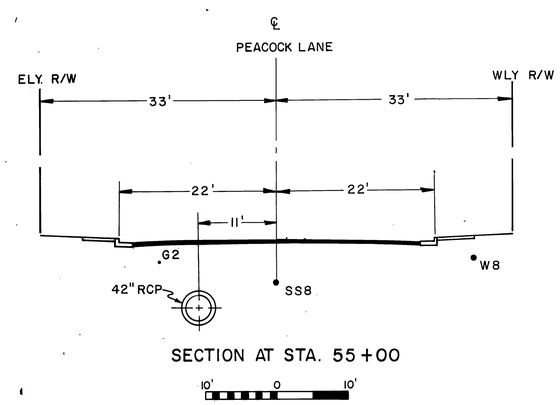

SECTION AT STA. 55+00

10' 0 10'

BENCH MARK C.P. NO. 18. N&T AT INTERSECTION ORION & PEACOCK. ELEV. 829.70	REVISIONS			RIVERSIDE COUNTY FLOOD CONTROL AND WATER CONSERVATION DISTRICT	LA SIERRA CHANNEL GRAMERCY PLACE STORM DRAIN STA. 53+00 TO STA. 56+20 1970 STORM DRAIN BOND ISSUE PROJECT NO. 20	PROJECT NO. 1-0-067
SCALE:				DESIGNED BY: H. D. & C.C. / DRAWN BY: S. Moody	APPROVED BY: John W. Bryant, CHIEF ENGINEER R.E. NO. 8822	DRAWING NO. 1-297
DATE:	C4	W8 Proper Location	D.M.M. 6-76	DATE DRAWN: 5-27-75 / CHECKED BY: D.M.M.	DATE: 4-21-75	SHEET NO. 15 OF 43
	REF.	DESCRIPTION	APPR. DATE			

AS BUILT

INDEX 4F

D-316

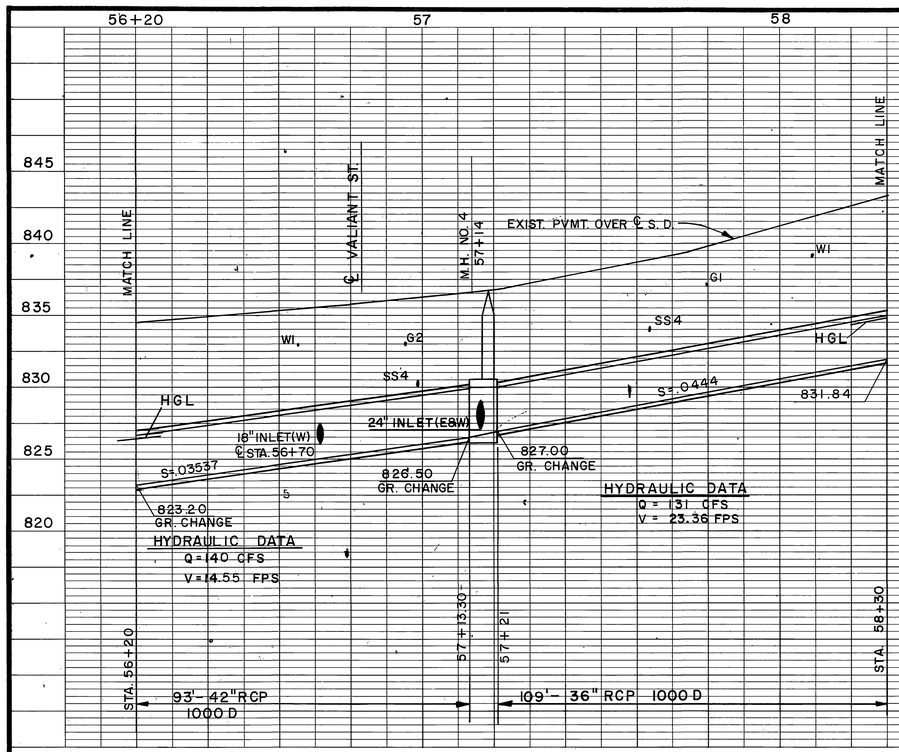

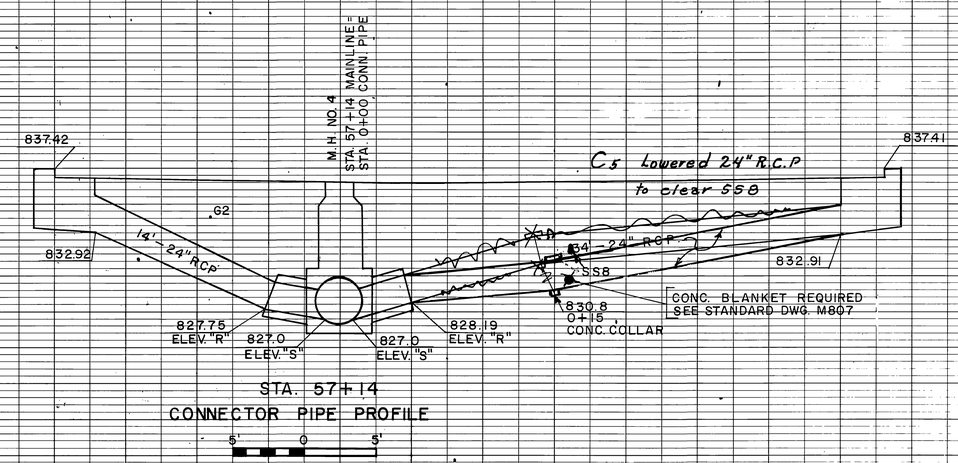

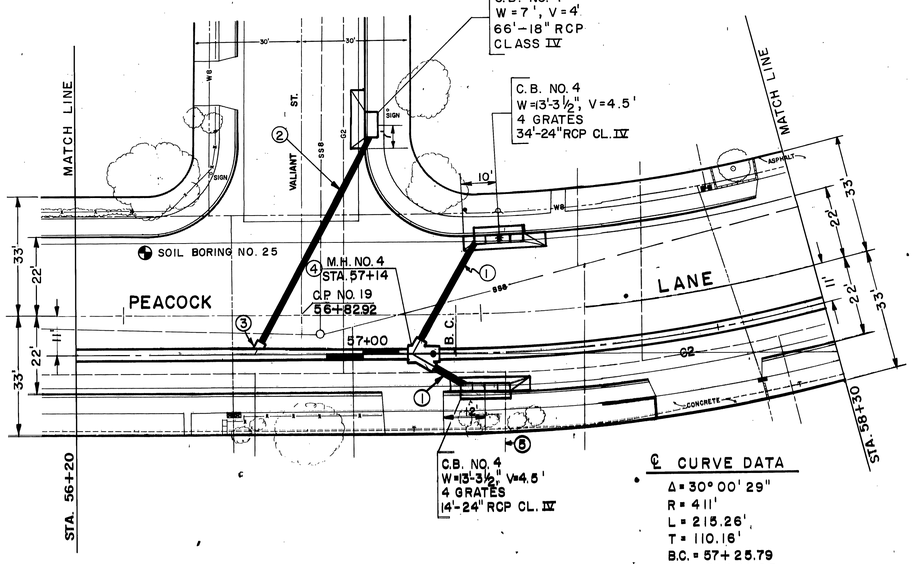

℄ CURVE DATA

Δ = 30° 00' 29"
R = 411'
L = 215.26'
T = 110.16'
B.C. = 57+25.79
E.C. = 59+41.05

NOTES:

1. CONNECTOR PIPE PROFILE THIS SHEET.
2. CONNECTOR PIPE PROFILE SHEET 18.
3. J.S. NO. 2
   A = 60° B = 18" C = 4' D = 42"
   E = 2'-6" F = 1'-7" G = 1'-7" L = 3'
   EL. "R" = 826.09 EL. "S" = 826.00
4. M.H. NO. 4 STA. 57+14

W. CONNECTOR PIPE	E. CONNECTOR PIPE
A = 60° 00' 00"	A = 35° 00' 00"
B = 24"	B = 24"
C = 4'-4"	C = 6'-11"
D_1 = 36"	D_1 = 36"
D_2 = 42"	D_2 = 42"
ELEV. "R" = 828.19	ELEV. "R" = 827.75
ELEV. "S" = 827.0	ELEV. "S" = 827.0

5. GI TO BE RELOCATED BY OTHERS PRIOR TO CONSTRUCTION.

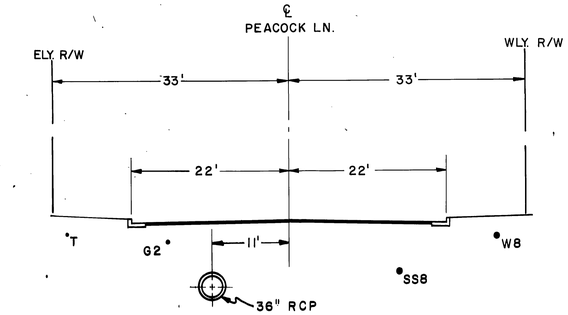

SECTION AT STA. 58+20

10' 0 10'

PLAN

1" = 20'

20' 0 20'

BENCH MARK C.P. NO. 19 TOP 3/4" I.P. R.E. 9876, AT INTERSECTION VALIANT & PEACOCK. ELEV. 835.96

SCALE:

DATE:

REVISIONS			
C5 · Lowered 24" R.C.P. to clear SS8		D.M.M.	1-76
REF.	DESCRIPTION	APPR.	DATE

AS BUILT

RIVERSIDE COUNTY FLOOD CONTROL AND WATER CONSERVATION DISTRICT

DESIGNED BY: H.D. & C.C.
DRAWN BY: S. Moody
DATE DRAWN: 4-7-75
CHECKED BY: D.M.M.
APPROVED BY: John K. Bryant, CHIEF ENGINEER R.E. NO. 8822
DATE: 4-21-75

LA SIERRA CHANNEL
GRAMERCY PLACE
STORM DRAIN
STA. 56+20 TO STA. 58+30
1970 STORM DRAIN BOND ISSUE PROJECT NO. 20

INDEX 4F

PROJECT NO. 1-0-067
DRAWING NO. 1-297
SHEET NO. 16 OF 43

0-316

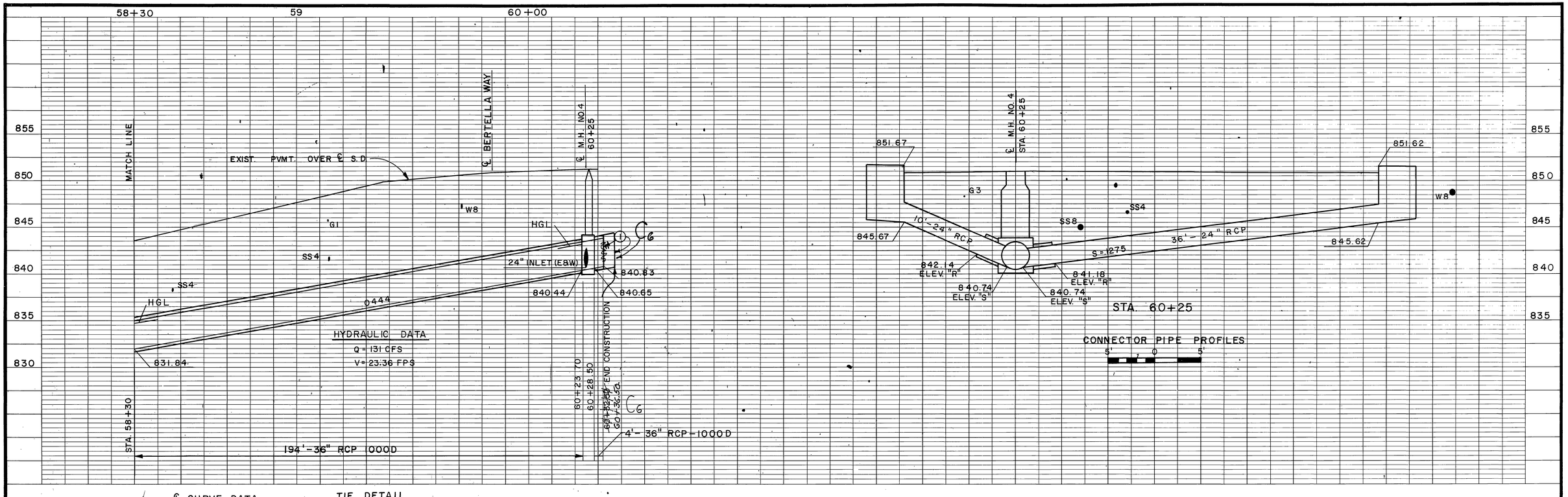

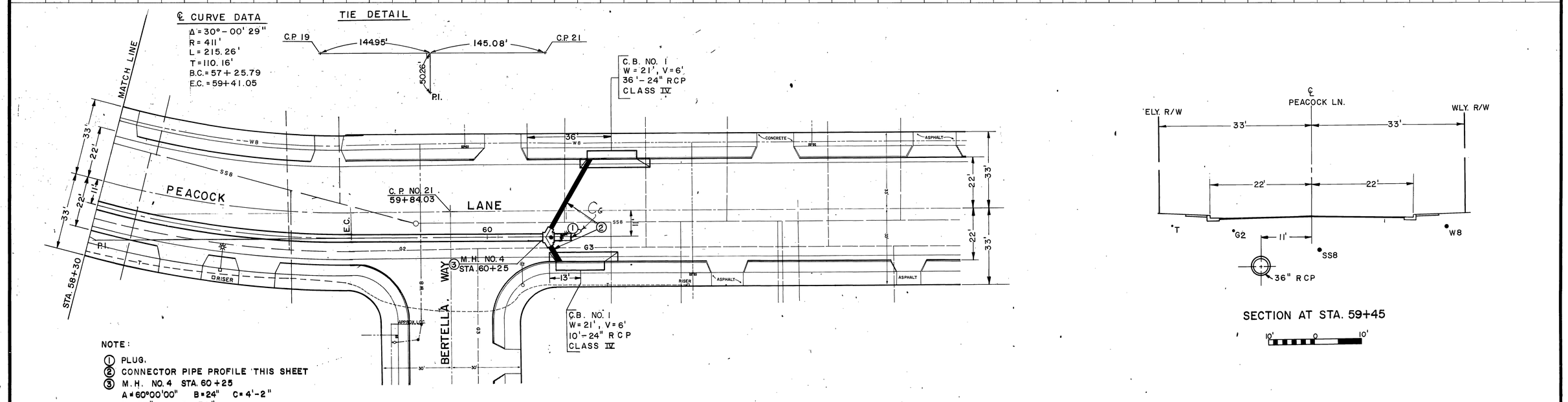

NOTE:

1. PLUG.
2. CONNECTOR PIPE PROFILE THIS SHEET
3. M.H. NO. 4 STA. 60+25
   A = 60°00'00" B = 24" C = 4'-2"
   D_1 = 36". D_2 = 36"
   ELEV. "R" (WEST) = 841.18
   ELEV. "R" (EAST) = 842.14
   ELEV. "S" = 840.74

PLAN

1" = 20'

20' 0 20'

BENCH MARK C.P. NO. 21 3/4" I.P. AT INTERSECTION PEACOCK & BERTELLA EL. 850.81	REVISIONS	RIVERSIDE COUNTY FLOOD CONTROL AND WATER CONSERVATION DISTRICT	LA SIERRA CHANNEL GRAMERCY PLACE STORM DRAIN STA. 58+30 TO STA. 60+32.50 1970 STORM DRAIN BOND ISSUE PROJECT NO. 20
SCALE:		DESIGNED BY: H.D. & C.C. DRAWN BY: S. Moody DATE DRAWN: 4-7-75 CHECKED BY: D.M.M.	APPROVED BY: John W. Bryant CHIEF ENGINEER R.E. NO. 8822 DATE: 4-21-75
DATE:	C6 End Const. Station Changed N.M. 6-76 REF. DESCRIPTION APPR. DATE		PROJECT NO. 1-0-067 DRAWING NO. 1-297 SHEET NO. 17 OF 43

INDEX WF

AS BUILT

D-316

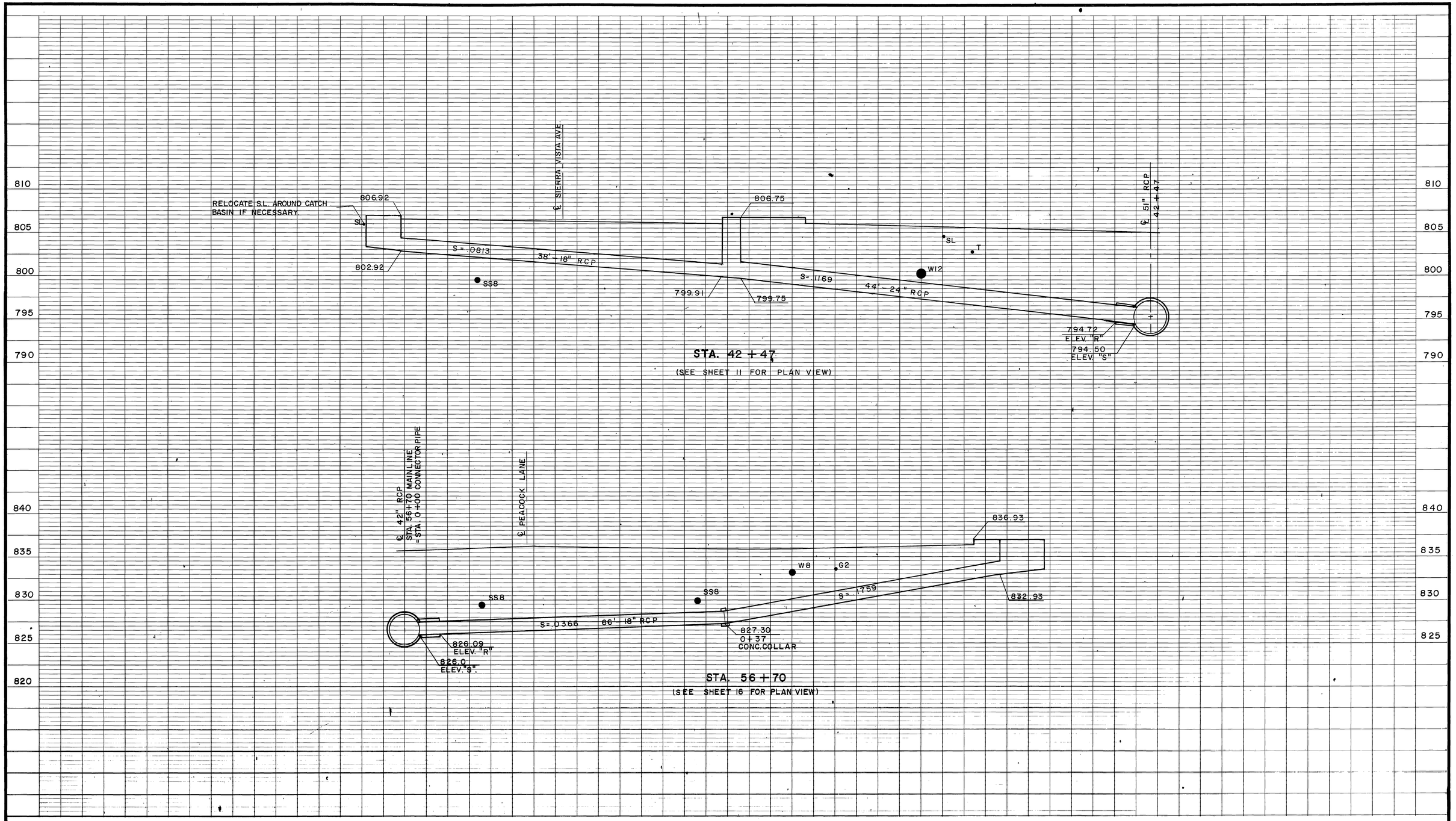

REVISIONS			
REF.	DESCRIPTION	APPR.	DATE
	No Change		

RIVERSIDE COUNTY FLOOD CONTROL AND WATER CONSERVATION DISTRICT

DESIGNED BY: C.C.
DRAWN BY: J. Moody
DATE DRAWN: 4-8-75
CHECKED BY: D.M.M.
APPROVED BY: Robert V. Bryant
CHIEF ENGINEER R.E. NO. 8822
DATE: 4-21-75

LA SIERRA CHANNEL

GRAMERCY PLACE STORM DRAIN

CONNECTOR PIPE PROFILES

1970 STORM DRAIN BOND ISSUE PROJECT NO. 20

INDEX 45

PROJECT NO. 1-0-067
DRAWING NO. 1-297
SHEET NO. 18 OF 43

AS BUILT

D-316

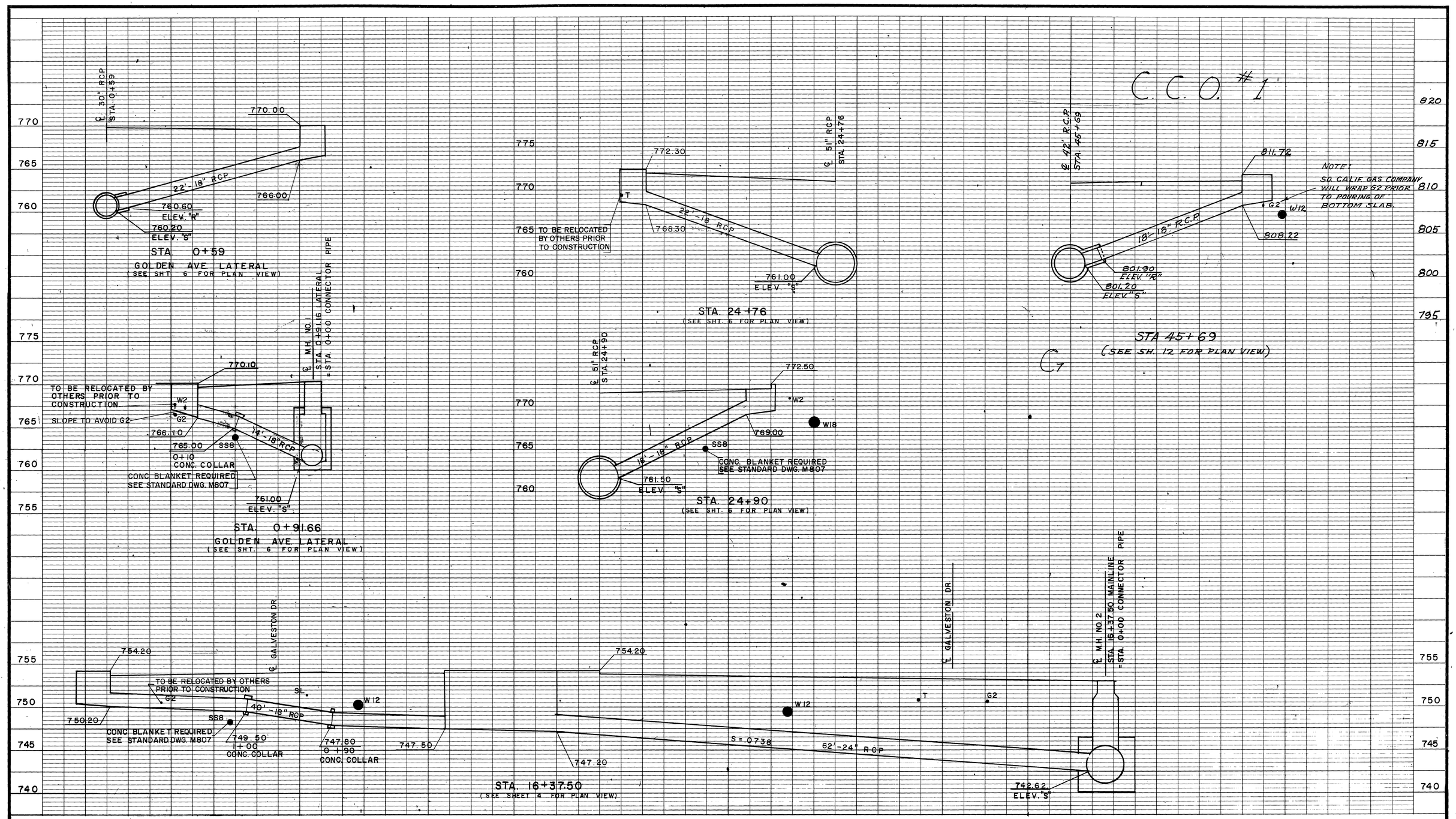

REVISIONS			
C2	C.C.O. 1 See Plan Sh 12	D.M.	6-76
REF.	DESCRIPTION	APPR.	DATE

RIVERSIDE COUNTY FLOOD CONTROL AND WATER CONSERVATION DISTRICT

DESIGNED BY: H.D. & C.C.
DRAWN BY: M. Scott
DATE DRAWN: 4-17-75
CHECKED BY: D.M.M.
APPROVED BY: John W. Beaumont
CHIEF ENGINEER R.E. NO. 8822
DATE: 4-21-75

LA SIERRA CHANNEL
GRAMERCY PLACE
STORM DRAIN
CONNECTOR PIPE PROFILES
1970 STORM DRAIN BOND ISSUE PROJECT NO. 20

INDEX UP

PROJECT NO. 1-0-067
DRAWING NO. 1-297
SHEET NO. 19 OF 43

AS BUILT

D-316