RIVERSIDE COUNTY FLOOD CONTROL AND WATER CONSERVATION DISTRICT

ANZA CHANNEL - STAGE II

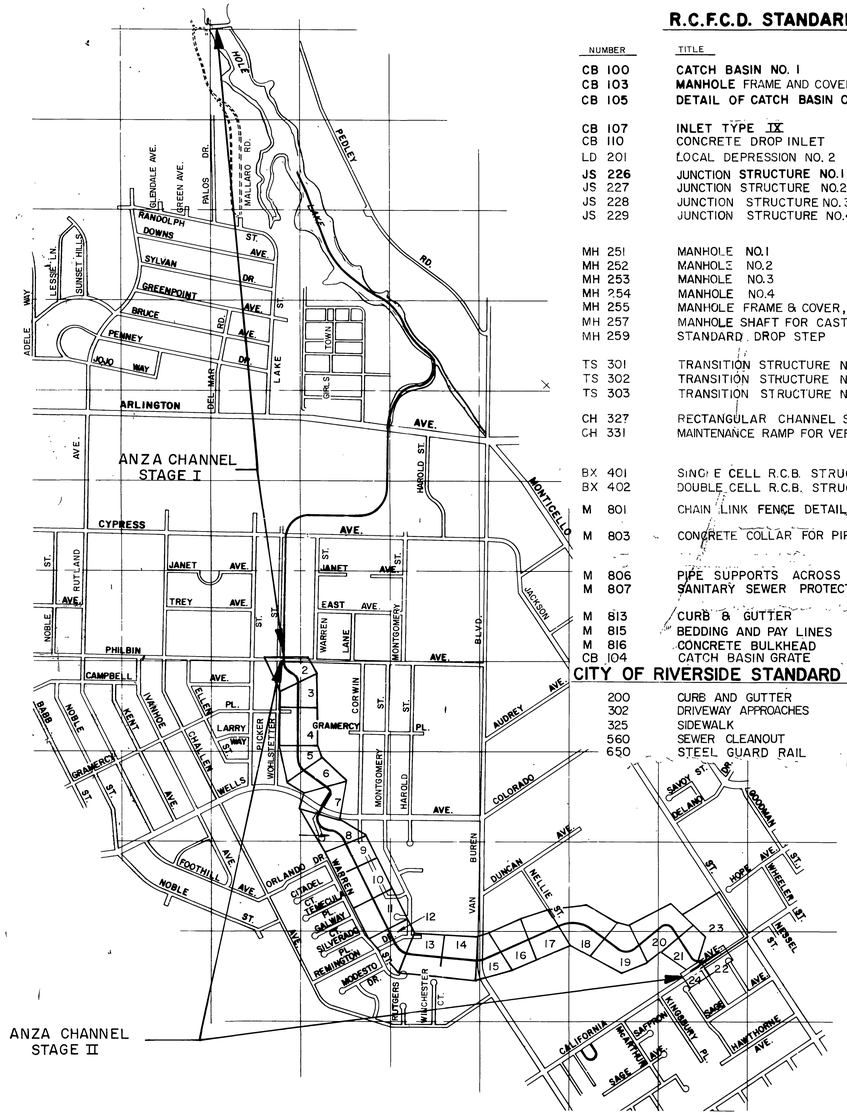

R.C.F.C.D. STANDARD DRAWINGS

NUMBER	TITLE	SHEET NO.
CB 100	CATCH BASIN NO. 1	40
CB 103	MANHOLE FRAME AND COVER FOR CATCH BASINS	41
CB 105	DETAIL OF CATCH BASIN OPENING	42
CB 107	INLET TYPE IX	43
CB 110	CONCRETE DROP INLET	44
LD 201	LOCAL DEPRESSION NO. 2	45
JS 226	JUNCTION STRUCTURE NO. 1	46
JS 227	JUNCTION STRUCTURE NO. 2	47-48
JS 228	JUNCTION STRUCTURE NO. 3	49
JS 229	JUNCTION STRUCTURE NO. 4	50
MH 251	MANHOLE NO. 1	51-52
MH 252	MANHOLE NO. 2	53
MH 253	MANHOLE NO. 3	54
MH 254	MANHOLE NO. 4	55-56
MH 255	MANHOLE FRAME & COVER, NON-ROCKING	57
MH 257	MANHOLE SHAFT FOR CAST PIPE	58
MH 259	STANDARD DROP STEP	59
TS 301	TRANSITION STRUCTURE NO. 1	60
TS 302	TRANSITION STRUCTURE NO. 2	61
TS 303	TRANSITION STRUCTURE NO. 3	62
CH 327	RECTANGULAR CHANNEL STRUCTURAL DETAILS	63
CH 331	MAINTENANCE RAMP FOR VERTICAL WALL CHANNEL	64
BX 401	SINGLE CELL R.C.B. STRUCTURAL DETAILS	65
BX 402	DOUBLE CELL R.C.B. STRUCTURAL DETAILS	66
M 801	CHAIN LINK FENCE DETAIL	67
M 803	CONCRETE COLLAR FOR PIPES 12" THROUGH 66"	68
M 806	PIPE SUPPORTS ACROSS TRENCHES	69
M 807	SANITARY SEWER PROTECTION	70
M 813	CURB & GUTTER	71
M 815	BEDDING AND PAY LINES	72
M 816	CONCRETE BULKHEAD	73
CB 104	CATCH BASIN GRATE	74

CITY OF RIVERSIDE STANDARD DRAWINGS

200	CURB AND GUTTER	75
302	DRIVEWAY APPROACHES	76-78
325	SIDEWALK	79
560	SEWER CLEANOUT	80
650	STEEL GUARD RAIL	81

ABBREVIATIONS

ABND.	ABANDONED
A.C.	ASPHALT CONCRETE
A.C.P.	ASBESTOS CEMENT PIPE
∡ PT.	ANGLE POINT
B.C.	BEGIN CURVE
B.C.R.	BEGIN CURB RETURN
C.B.	CATCH BASIN
C.I.P.	CAST IRON PIPE
CL	CLASSIFICATION
C.M.P.	CORRUGATED METAL PIPE
CONC.	CONCRETE
COND.	CONDUIT
C.P.	CONTROL POINT
C/R	CITY OF RIVERSIDE
DWY.	DRIVEWAY
E.C.	END CURVE
E.C.R.	END CURB RETURN
EL.	ELEVATION
F.L.	FLOW LINE
G.C.	GRADE CHANGE
H.G.L.	HYDRAULIC GRADE LINE
J.S.	JUNCTION STRUCTURE
L	LENGTH
L.D.	LOCAL DEPRESSION
M.H.	MANHOLE
P.C.C.	PORTLAND CEMENT CONCRETE
P.R.C.	POINT OF REVERSE CURVE
R	RADIUS
R.C.B.	REINFORCED CONCRETE BOX
R.C.P.	REINFORCED CONCRETE PIPE
S.B.	SOIL BORING
S.D.	STORM DRAIN
SHT.	SHEET
STA.	STATION
T	TANGENT LENGTH
T.C.	TOP OF CURB
T.S.	TRANSITION STRUCTURE
R/W	RIGHT OF WAY
EXIST.	EXISTING
T.C.E	TEMPORARY CONSTRUCTION EASEMENT

LEGEND

ANCHOR & POLE
BUILDING
BURIED TELEPHONE CABLE
CATCH BASIN
CONCRETE GUTTER
CONTROL LINE
CULVERT WITH HEADWALLS
CURB FACE
DRIVEWAY
EXISTING FLOW LINE
FENCE (OTHER THAN CHAIN LINK)
FENCE (EXISTING CHAIN LINK)
FENCE (CHAIN LINK TO BE CONST.)
FIRE ALARM CONDUIT
FIRE HYDRANT
GAS LINE
GAS METER
IRRIGATION LINE
JUNCTION STRUCTURE NO. 1 & 2
MANHOLE COVER (STORM DRAIN)
MANHOLE (SEWER)
MTD, MCD TELEPHONE
TCE LINE
PARKWAY
SIDEWALK
PROPERTY LINE
ELECTRICAL LINE
SANITARY SEWER LINE
SIGN
SOIL BORING
STORM DRAIN LINE (EXISTING)
STREET LIGHT
STREET LIGHT STANDARD
STREET LIGHT UNDERGROUND
STREET RIGHT OF WAY
TELEPHONE OR POWER POLE
TRAFFIC LIGHT (OVERHEAD)
TRAFFIC LOOP
TRAFFIC SIGNAL CONDUIT
TREE
WALL (BLOCK OR MASONRY)
WATER LINE
WATER METER
WATER VALVE
REINFORCED CONCRETE BOX
RECTANGULAR CONCRETE CHANNEL
INDICATES FUTURE CONSTRUCTION
LIMITS OF GRADING
SPRINKLER HEAD
IRRIGATION CONTROL VALVE

GENERAL NOTES

1. TIES FOR CATCH BASINS AS SHOWN ON THE DRAWINGS ARE FROM CURB RETURN TO CENTER LINE OF CATCH BASIN, UNLESS OTHERWISE SHOWN. WHERE NO TIE IS SHOWN L.D. SHALL BEGIN AT CURB RETURN.
2. "V_i" IS THE DEPTH OF INLET OF CATCH BASINS IN SERIES MEASURED FROM TOP OF CURB TO INVERT OF CONNECTOR PIPE.
3. ALL RESURFACING, CURBS, GUTTERS, SIDEWALKS, DRIVEWAYS AND OTHER EXISTING IMPROVEMENTS TO BE RECONSTRUCTED SHALL BE CONSTRUCTED AT THE SAME ELEVATION AND LOCATION AS THE EXISTING IMPROVEMENTS, UNLESS OTHERWISE NOTED.
4. STREET RESURFACING SHALL BE, 3" A.C. ON 6" CLASS 3 AGGREGATE BASE, UNLESS OTHERWISE SHOWN.
5. CHANNEL ACCESS ROAD SHALL BE UNPAVED.
6. ALL OPENINGS RESULTING FROM CUTTING OR PARTIAL REMOVAL OF EXISTING CULVERTS, PIPES OR SIMILAR STRUCTURES SHALL BE SEALED WITH 8" OF CLASS "B" CONCRETE, NOTED ON THE DRAWINGS AS "PLUG."
7. PIPE CONNECTIONS TO MAIN LINE SHALL CONFORM TO STANDARD DRAWINGS J.S. NO. 3 OR J.S. NO. 4, UNLESS OTHERWISE SHOWN.
8. CENTERWALLS OF ALL DOUBLE BOXES SHALL BE ROUNDED PER DETAIL ON SHEET NO. 25.

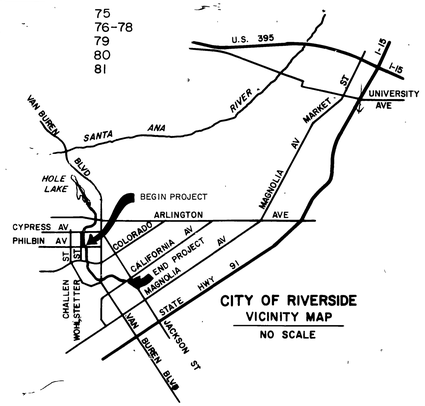

CITY OF RIVERSIDE
VICINITY MAP
NO SCALE

DRAWING INDEX

	SHEET NO.
TITLE SHEET, LOCATION MAP, LEGEND & DRAWING INDEX	1
ANZA CHANNEL PLAN & PROFILE	2-22
ANZA RESERVOIR	23
CALIFORNIA AVENUE LATERAL	24
MISCELLANEOUS DETAILS	25
CONNECTOR PIPE PROFILES	25-27
ANZA RESERVOIR INLET-OUTLET STRUCTURE	28
STRUCTURAL DETAILS	29
CALIFORNIA AVENUE IMPROVEMENT PLANS	30
JACKSON STREET & GRAMERCY PLACE IMPROVEMENT PLANS	31
WARREN STREET IMPROVEMENT PLANS	32
ANZA RESERVOIR LANDSCAPING & IRRIGATION PLANS	33-34
LANDSCAPING & IRRIGATION PLANS	35
JOHN BRYANT PARK DETAILS	36
PROFILE & CROSS SECTIONS	37
VAN BUREN BOULEVARD DETOUR PLANS	38-39

LOCATION MAP

800 0 800 1600 FEET
SCALE

BENCH MARK
SCALE:
DATE:

APPROVED BY
DATE April 20 1976
ALDERMAN SWIFT & LEWIS CONSULTING ENGINEERS
REGISTERED CIVIL ENGINEER NO. 11543

REVISIONS

REF.	DESCRIPTION	APPR.	DATE
	No Changes		

AS BUILT

RIVERSIDE COUNTY FLOOD CONTROL AND WATER CONSERVATION DISTRICT
DESIGNED BY: G.L.H.
DRAWN BY: E.L.H.
DATE DRAWN: OCT. 1973
CHECKED BY: G.L.H.
APPROVED BY: John W. Bryant, CHIEF ENGINEER R.E. NO. 8822
DATE: 2-26-76

ANZA CHANNEL
STAGE II

1970 STORM DRAIN BOND ISSUE PROJECT NO. 18

INDEX OF
PROJECT NO 1-0-150
DRAWING NO 1-319
SHEET NO 1 OF 81

D-353

NOTE: CONTRACTOR SHALL PROTECT IN PLACE ALL UTILITIES CROSSING OR PARALLELING THE STORM DRAIN, UNLESS OTHERWISE NOTED.

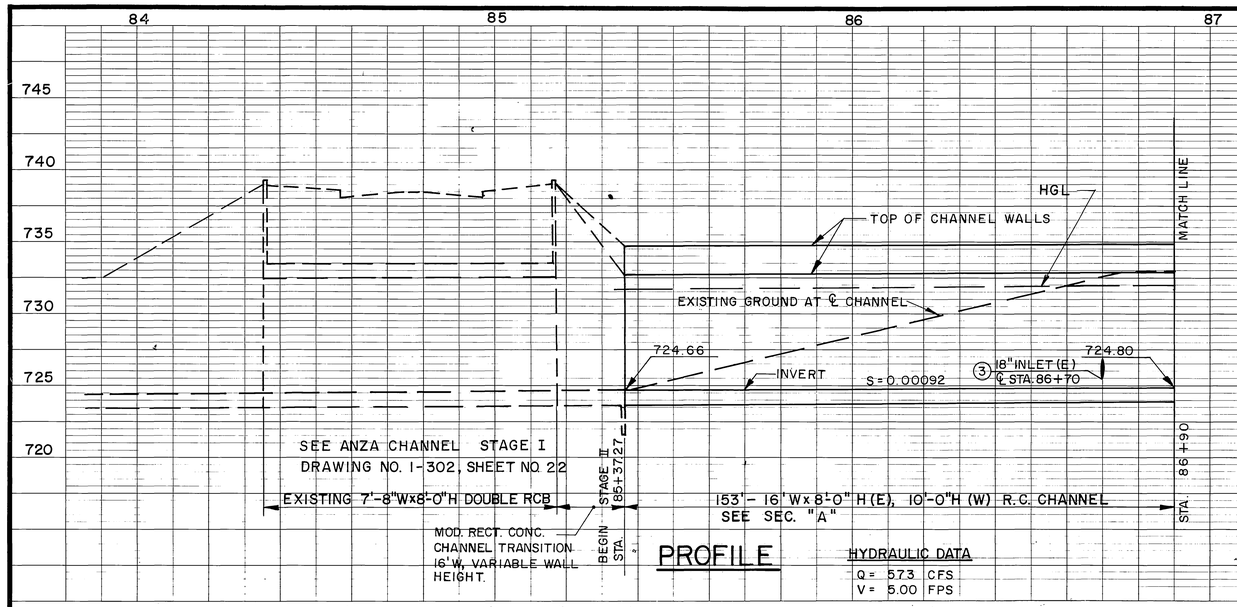

PROFILE

HYDRAULIC DATA

Q =	573 CFS
V =	5.00 FPS

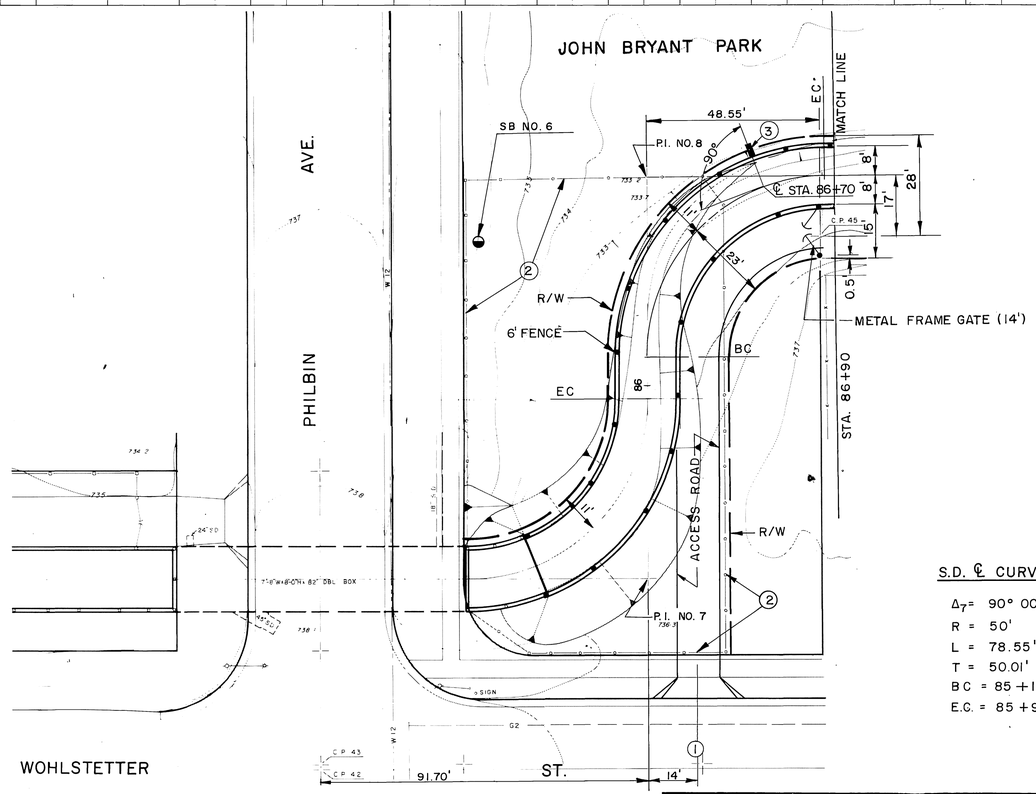

PLAN

1" = 20'

20' 0 20'

① CONSTRUCT 12' COMMERCIAL DRIVEWAY PER CITY OF RIVERSIDE STANDARD DRAWING NO. 302, TYPE II, A = 12', B = 26'.

② REMOVE EXISTING CHAIN LINK FENCE. SEE SPECIFICATIONS.

③ 4'-18" RCP, CL IV. EL. "S" = 725.48
END EL. = 725.56. PLUG END OF PIPE.

4. JOHN BRYANT PARK DETAILS SHEET NO. 36.

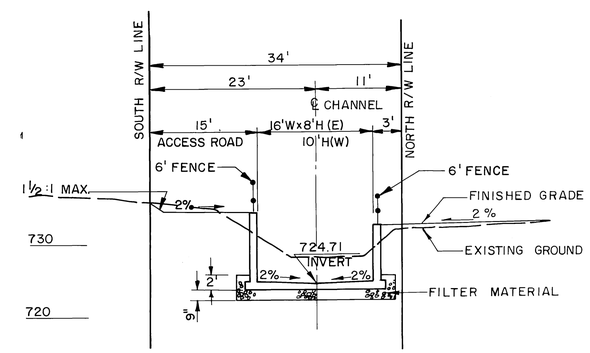

SECTION AT STA. 86 + 00

10' 0 10'

S.D. ℄ CURVE DATA

Δ_7 = 90° 00' 56"
R = 50'
L = 78.55'
T = 50.01'
BC = 85 + 17.96
E.C. = 85 + 96.51

S.D. ℄ CURVE DATA

Δ_8 = 90° 00' 22"
R = 50'
L = 78.55'
T = 50.01'
B.C. = 86 + 07.88
E.C. = 86 + 86.43

BENCH MARK C.P. 42
BRASS DISK 0.16 DOWN AT INTERSECTION OF WOHLSTETTER AND PHILBIN NORTH. EL. 737.429

SCALE:

DATE:

ALDERMAN SWIFT & LEWIS CONSULTING ENGINEERS

APPROVED BY

DATE

REGISTERED CIVIL ENGINEER * NO. 11543

REVISIONS			
REF.	DESCRIPTION	APPR.	DATE
	No Changes		

AS BUILT

RIVERSIDE COUNTY FLOOD CONTROL AND WATER CONSERVATION DISTRICT

DESIGNED BY: A.G.K.
DRAWN BY: J. Moody
DATE DRAWN:
CHECKED BY:

APPROVED BY: John W. Bryant
CHIEF ENGINEER R.E. NO. 8822
DATE: 2-26-76

ANZA CHANNEL
STAGE II
STA. 85+37.27 TO STA. 86+90
1970 STORM DRAIN BOND ISSUE PROJECT NO. 18

INDEX

PROJECT NO. 1-0-150
DRAWING NO. 1-319
SHEET NO. 2 OF 81

D-353

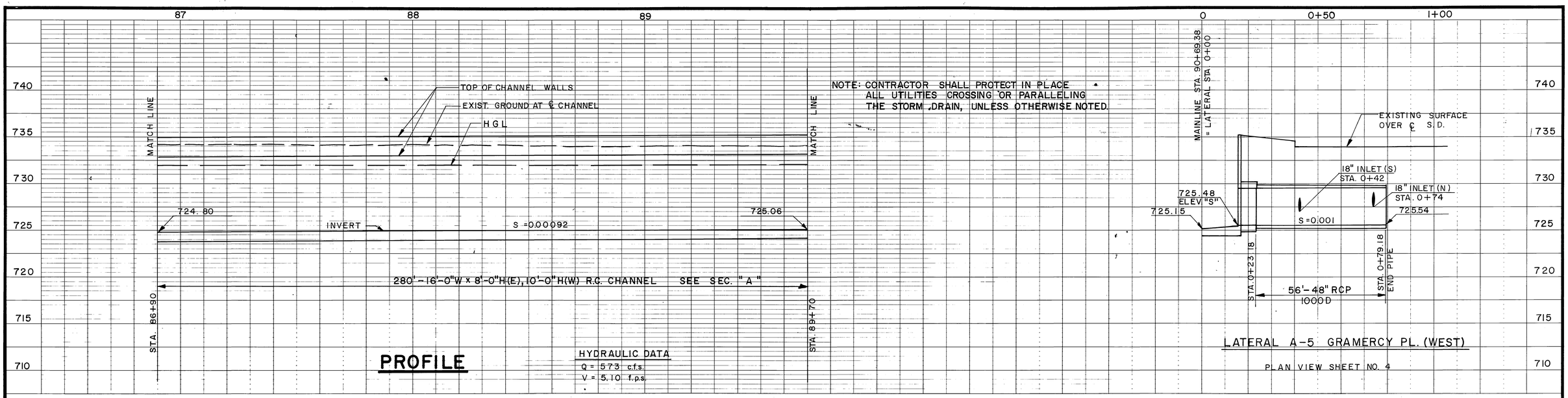

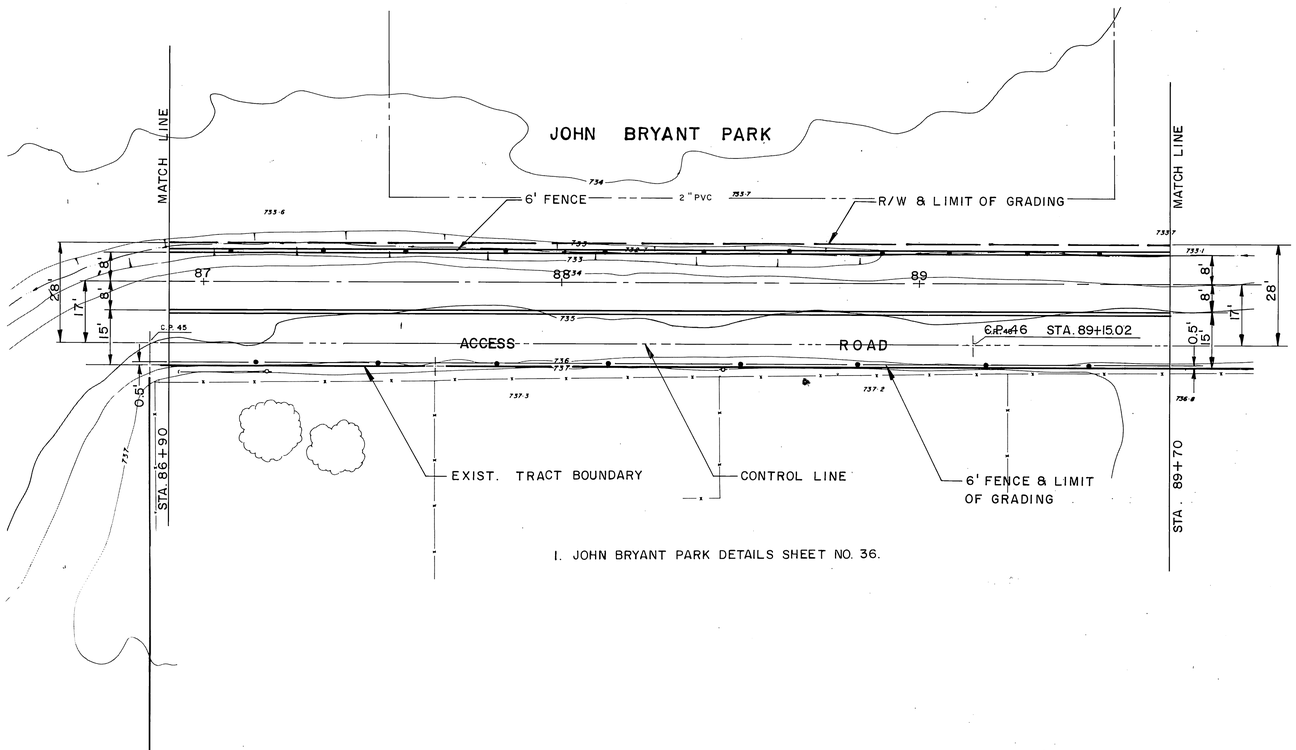

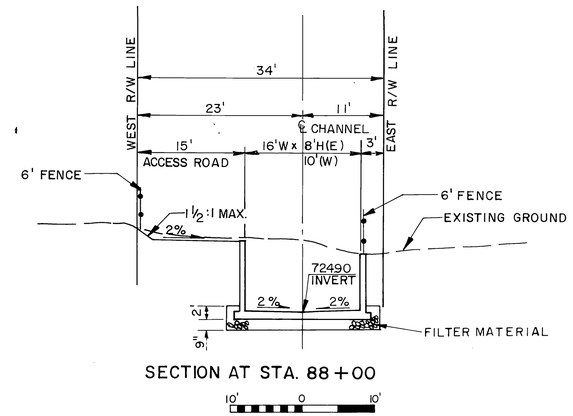

PLAN

1" = 20'

20' 0 20'

BENCH MARK C.P. 45
3/4" I.P. ON A LINE OFFSET 6' EASTERLY FROM TRACT BOUNDARY
ELEV. 734.782

SCALE:

DATE:

ALDERMAN SWIFT & LEWIS CONSULTING ENGINEERS

APPROVED BY

DATE

REGISTERED CIVIL ENGINEER NO. 11543

REVISIONS			
REF.	DESCRIPTION	APPR.	DATE
	No Changes		

AS BUILT

RIVERSIDE COUNTY FLOOD CONTROL AND WATER CONSERVATION DISTRICT

DESIGNED BY:

DRAWN BY:

DATE DRAWN:

CHECKED BY:

APPROVED BY: John K. Bryant
CHIEF ENGINEER R.E. NO. 8822

DATE: 2-26-76

ANZA CHANNEL
STAGE II
STA. 86+90 TO STA. 89+70
1970 STORM DRAIN BOND ISSUE PROJECT NO. 18

INDEX UE

PROJECT NO. 1-0-150

DRAWING NO. 1-319

SHEET NO. 3 OF 81

D-353

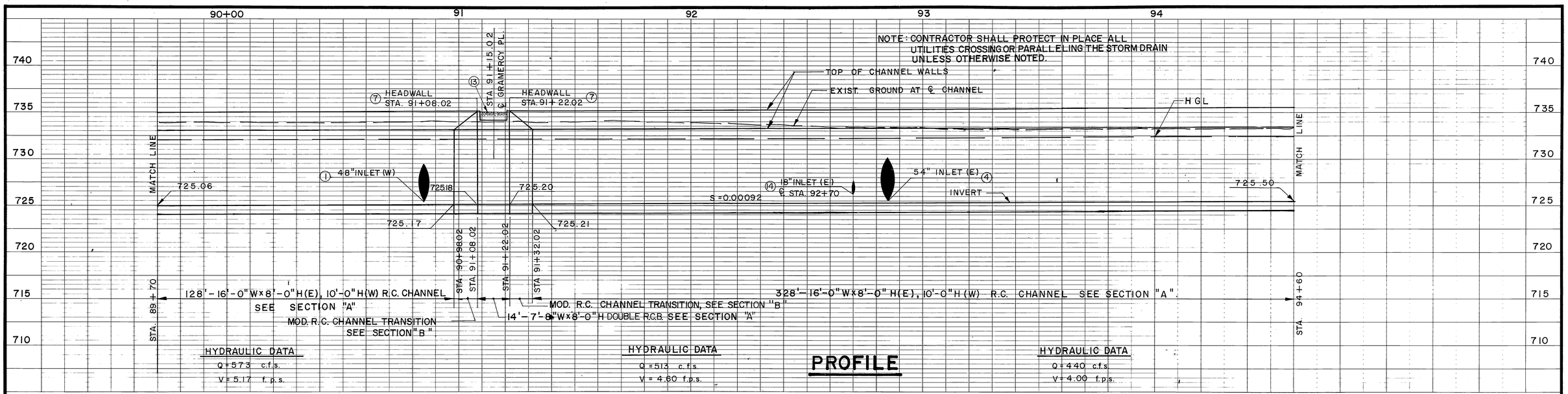

PROFILE

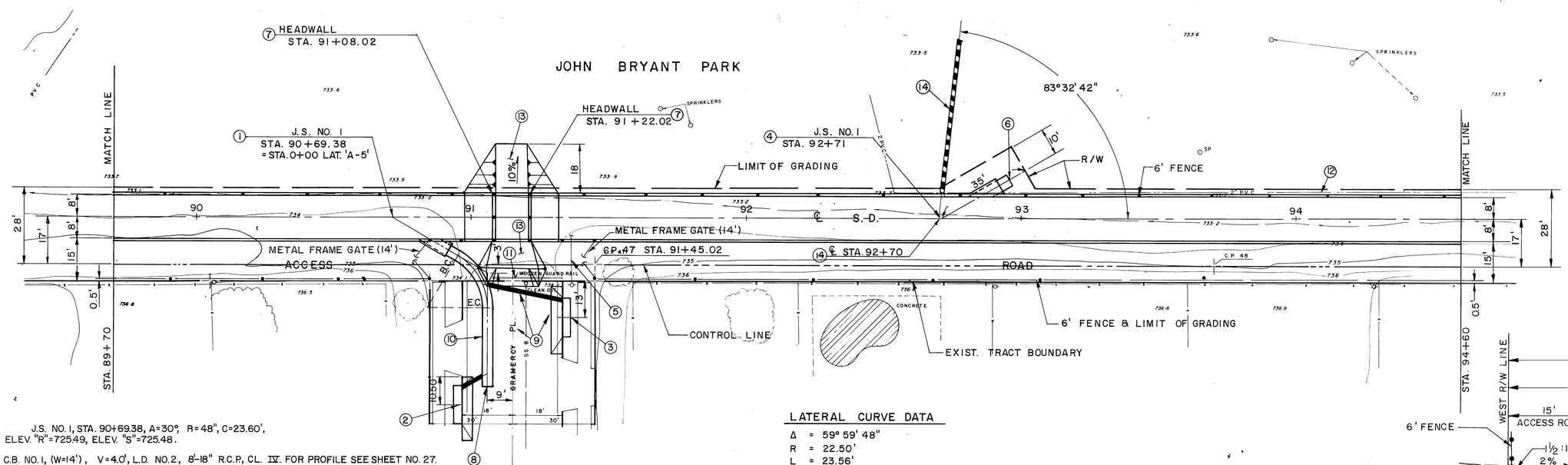

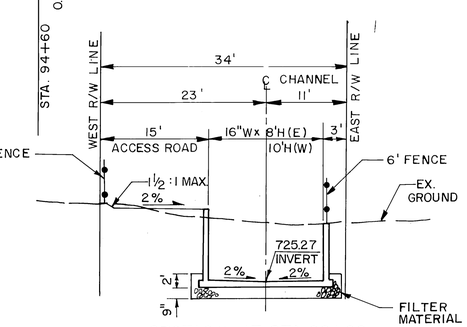

SECTION AT STA. 92+00

10' 0 10'

① J.S. NO. 1, STA. 90+69.38, A=30°, B=48", C=23.60', ELEV. "R"=725.49, ELEV. "S"=725.48.

② C.B. NO. 1, (W=14'), V=4.0', L.D. NO. 2, 8'-18" R.C.P., CL. IV. FOR PROFILE SEE SHEET NO. 27. STA. 0+74

③ C.B. NO. 1, (W=14'), V=4.0', L.D. NO. 2, CASE "C", 28'-18" R.C.P. CL. IV, FOR PROFILE SEE SHEET NO. 27. STA. 0+42.

④ J.S. NO. 1, STA. 92+71, A = 30°, B = 54", C = 24.20', ELEV. "R"=725.67, ELEV. "S"=725.66.

⑤ TO BE RELOCATED BY OTHERS PRIOR TO CONSTRUCTION.

⑥ 4'-54" R.C.P., 1200 D, ELEV. AT END 725.68, SEAL END WITH CONCRETE BULKHEAD.

⑦ HEADWALL, H=144, SEE DETAIL ON SHEET NO. 25

⑧ SEAL END WITH CONCRETE BULKHEAD.

⑨ FOR STREET RECONSTRUCTION SEE SHEET NO. 31.

⑩ PROFILE VIEW SHEET NO. 3.

⑪ REMOVE WOODEN GUARD RAIL.

⑫ REMOVE INTERFERING PORTION OF 2" PVC.

⑬ GRADE RAMP OVER BOX AS SHOWN.

⑭ 18" RCP, EL."S" = 726.14 SEE DETAILS SHEET NO. 36.

15. JOHN BRYANT PARK DETAILS SHEET NO. 36.

LATERAL CURVE DATA

Δ = 59° 59' 48"
R = 22.50'
L = 23.56'
T = 12.99'
BC = 0+27.01
EC = 0+50.57

PLAN

1" = 20'

20' 0 20'

BENCH MARK C.P. 47
3/4" I.P. ON A LINE OFFSET 6' FROM TRACT BOUNDARY AT THE SOUTHERLY SIDE OF GRAMERCY PLACE. ELEV. 734.59

SCALE:

DATE:

ALDERMAN SWIFT & LEWIS CONSULTING ENGINEERS

APPROVED BY

DATE

REGISTERED CIVIL ENGINEER NO. 11543

REVISIONS			
REF.	DESCRIPTION	APPR.	DATE
	No Changes		

RIVERSIDE COUNTY FLOOD CONTROL AND WATER CONSERVATION DISTRICT

DESIGNED BY:
DRAWN BY: S. Moody
DATE DRAWN:
CHECKED BY:

APPROVED BY: John W. Bryant
CHIEF ENGINEER-R.E. NO. 8822
DATE: 2-26-76

ANZA CHANNEL
STAGE II
STA. 89+70 TO STA. 94+60
1970 STORM DRAIN BOND ISSUE PROJECT NO. 18

PROJECT NO. 1-0-150
DRAWING NO. 1-319
SHEET NO. 4 OF 81

AS BUILT

D-353

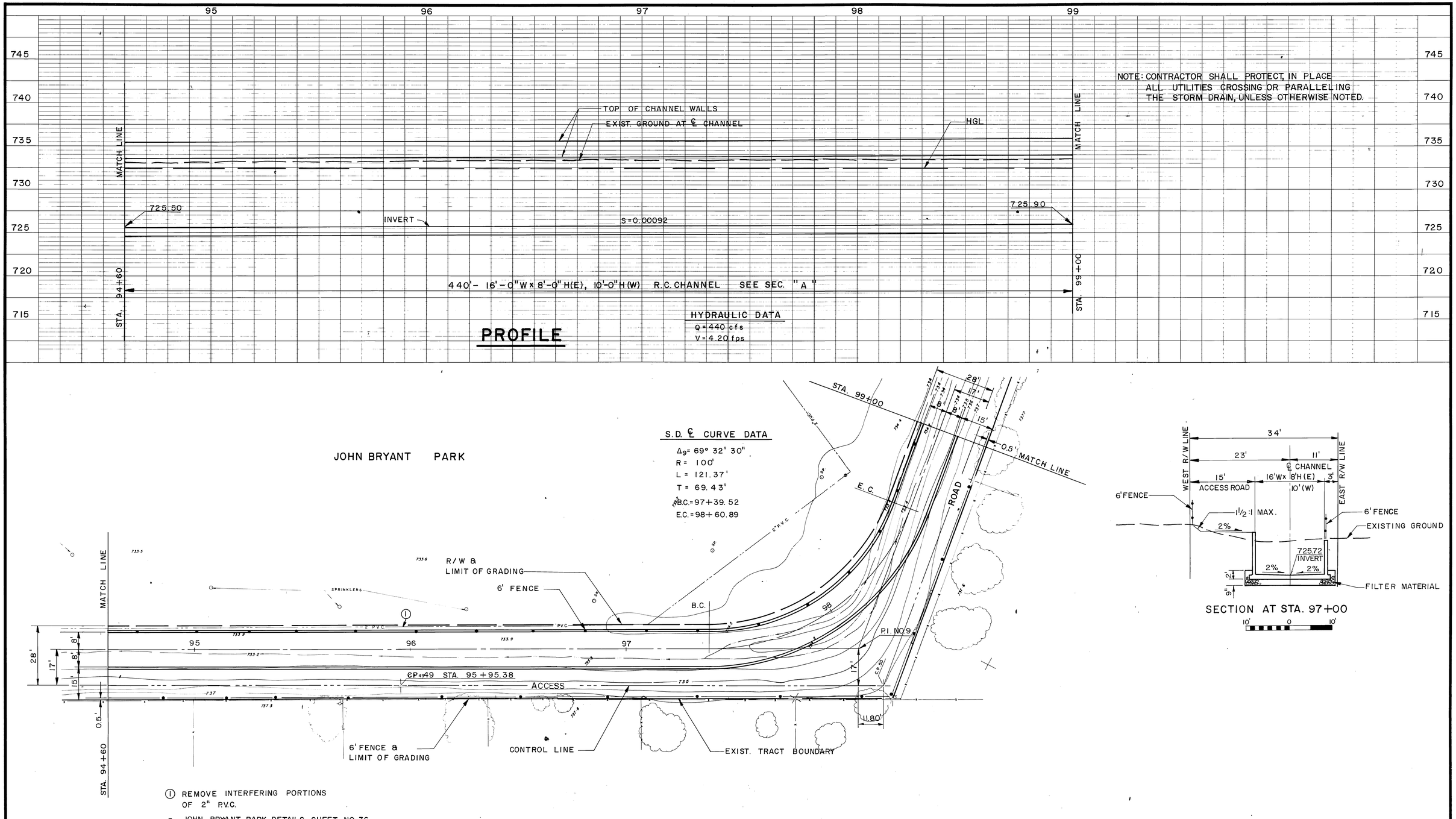

PLAN

1"=20'

20' 0 20'

BENCH MARK C.P. 50 3/4" I.P. ON A LINE OFFSET 6' FROM TRACT BOUNDARY LINE ELEV. 736.172	ALDERMAN SWIFT & LEWIS CONSULTING ENGINEERS	APPROVED BY	REVISIONS	RIVERSIDE COUNTY FLOOD CONTROL AND WATER CONSERVATION DISTRICT	ANZA CHANNEL STAGE II
SCALE:		DATE	No Changes	DESIGNED BY:	STA. 94+60 TO STA. 99+00
DATE:		REGISTERED CIVIL ENGINEER NO. 11543	REF. DESCRIPTION APPR. DATE	DRAWN BY: S. Moody	1970 STORM DRAIN BOND ISSUE PROJECT NO. 18
				DATE DRAWN:	
				CHECKED BY:	
				APPROVED BY: John W. Bryant CHIEF ENGINEER R.E. NO. 8822	
				DATE: 2-26-76	

INDEX WF

PROJECT NO. 1-0-150

DRAWING NO. 1-319

SHEET NO. 5 OF 81

AS BUILT

D-353

PROFILE

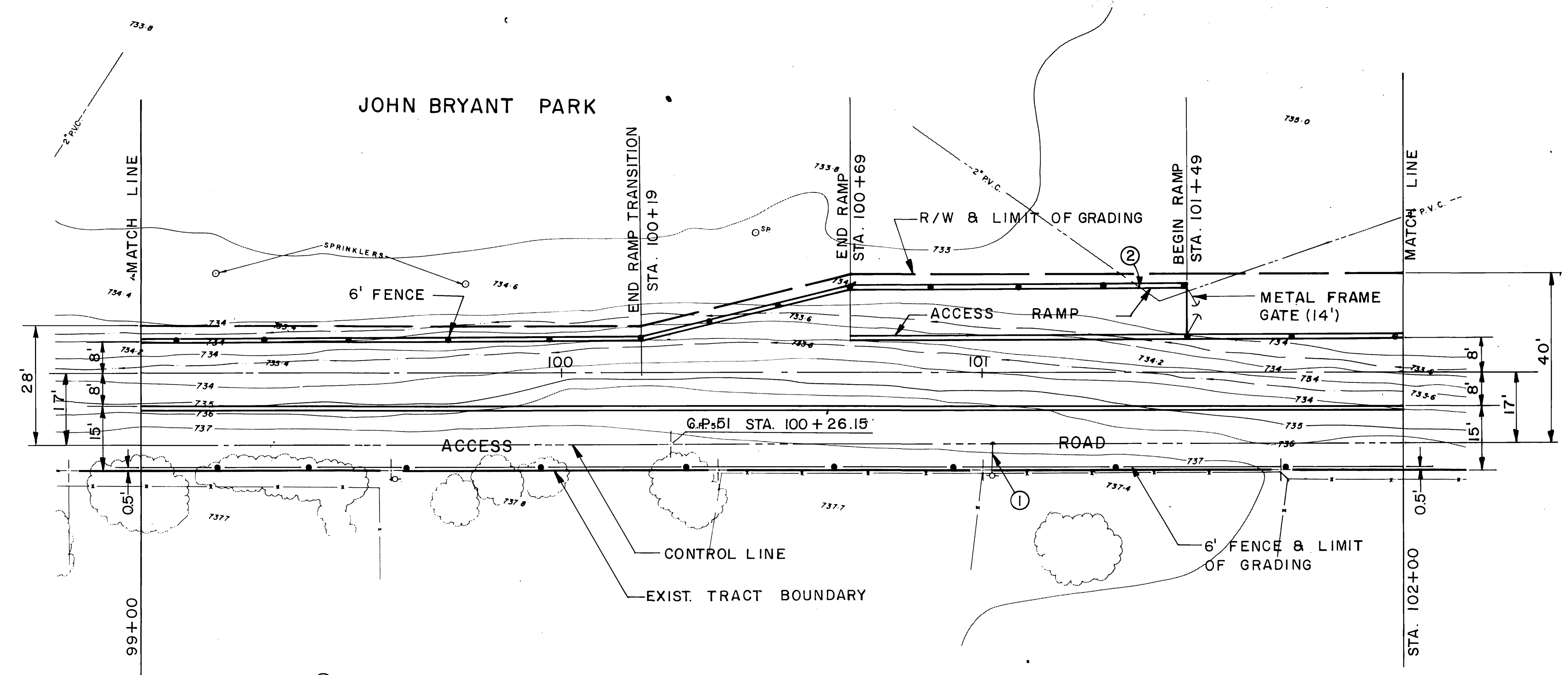

① TO BE RELOCATED BY OTHERS PRIOR TO CONSTRUCTION.

② REMOVE INTERFERING PORTIONS OF 2" PVC

3. JOHN BRYANT PARK DETAILS SHEET NO. 36.

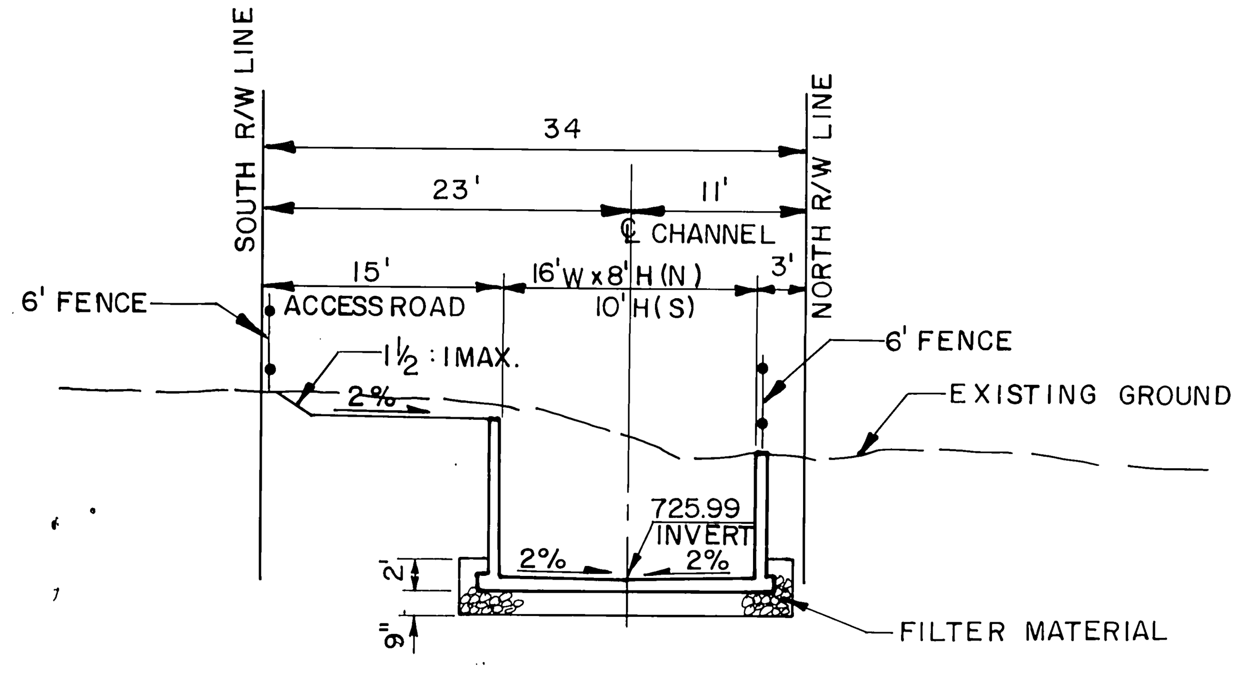

SECTION AT STA. 100+00

10' 0 10'

PLAN

1" = 20'

20' 0 20'

BENCH MARK CP 51
3/4" I.P. ON A LINE OFFSET 6' FROM TRACT BOUNDARY.
ELEV. 737.306

SCALE:

DATE:

ALDERMAN SWIFT & LEWIS CONSULTING ENGINEERS

APPROVED BY

DATE

REGISTERED CIVIL ENGINEER NO. 11543

REVISIONS			
REF.	DESCRIPTION	APPR.	DATE
	No Changes		

AS BUILT

RIVERSIDE COUNTY FLOOD CONTROL AND WATER CONSERVATION DISTRICT

DESIGNED BY:
DRAWN BY: S. Moody
DATE DRAWN:
CHECKED BY:

APPROVED BY: John W. Bryant
CHIEF ENGINEER R.E. NO. 8822
DATE: 2-26-76

ANZA CHANNEL
STAGE II
STA. 99+00 TO STA. 102+00
1970 STORM DRAIN BOND ISSUE PROJECT NO. 18

INDEX WF

PROJECT NO. 1-0-150

DRAWING NO. 1-319

SHEET NO. 6 OF 81

D-353

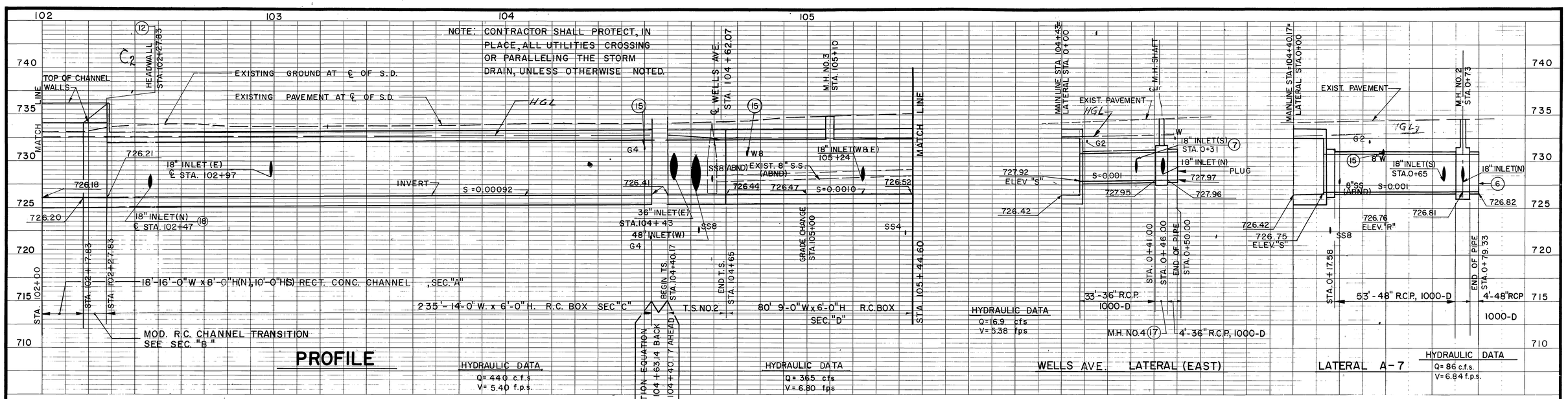

S.D. ℄ CURVE DATA

Δ_{10} = 99° 06' 51"
R = 45'
L = 77.84'
T = 52.80'
B.C. = 102+28.83
E.C. = 103+06.67

S.D. ℄ CURVE DATA, LATERAL "A-7"

Δ = 62° 24' 46"
R = 45'
L = 49.02
T = 27.26
B.C. = 0+20
E.C. = 0+69.02

1. C.B. NO. 1, W=7', V=4.0' LD NO. 2, A=MATCH EXISTING, C.F.=EXISTING C.F. +2", 8-18" R.C.P. CL. IV, SEE PROFILE ON SHEET NO. 25.
2. STA. 104+43 ℄ 36" LATERAL. SEE PROFILE ON THIS SHEET.
3. FOR STREET CONSTRUCTION SEE SHEET NO. 32.
4. J.S. NO. 1, STA. 104+40.17, A=30°, B.=48", C.=18.0', ELEV. "R"=726.76 ELEV. "S"=726.75
5. C.B. NO. 1, W=14', V=5.5' L.D. NO. 2, 14'-18" R.C.P. CL. IV SEE PROFILE ON SHEET NO. 27.
6. SEAL END OF PIPE WITH CONC. BULKHEAD.
7. J.S. NO. 2, STA. 0+31, A=75°, B=18", C=2.5', D=36", E=4.4', F=0.7', G=0.5' L=5.0', ELEV. "S"=728.69, ELEV. "R"=728.71
8. C.B. NO. 1, W=14', V=4.0'; L.D. NO. 2, 53'-18" R.C.P. CL. IV SEE PROFILE ON SHEET NO. 27.
9. C.B. NO. 1, W=7', V=4.0' L.D. NO. 2, 9'-18" R.C.P. CL. IV. SEE PROFILE ON SHEET NO. 25.
10. C.B. NO. 1, W=7', V=4.0' L.D. NO. 2, 19'-18" R.C.P. CL. IV. SEE PROFILE ON SHEET NO. 25.
11. C.B. NO. 1, W=14', V=4.0' L.D. NO. 2, 12'-18" R.C.P. CL. IV. SEE PROFILE ON SHEET NO. 27.
12. HEADWALL, H=3.2' SEE DETAIL SHEET NO. 25.
13. ℄ 48" R.C.P. LATERAL "A-7" OF MONROE AREA DRAINAGE PLAN. SEE PROFILE ON THIS SHEET.
14. C.B. NO. 1, W=14', V=4.0' L.D. NO. 2, 52'-18" R.C.P. CL. IV. SEE PROFILE ON SHEET NO. 27.
15. TO BE RELOCATED BY OTHERS.
16. REMOVE GUARD RAIL. RECONSTRUCT AT NEW LOCATION SHOWN ON SHEET NO. 32
17. M.H. NO. 4 DATA A=50°, B=18", C=5.0', $D_1=D_2=36"$ ELEV. "S"=728.70 ELEV. "R"=728.86
18. 4'-18" RCP, CL. IV. EL. "S"=727.02 END EL.=727.10. PLUG END OF PIPE.
19. JOHN BRYANT PARK DETAILS SHEET NO. 36.

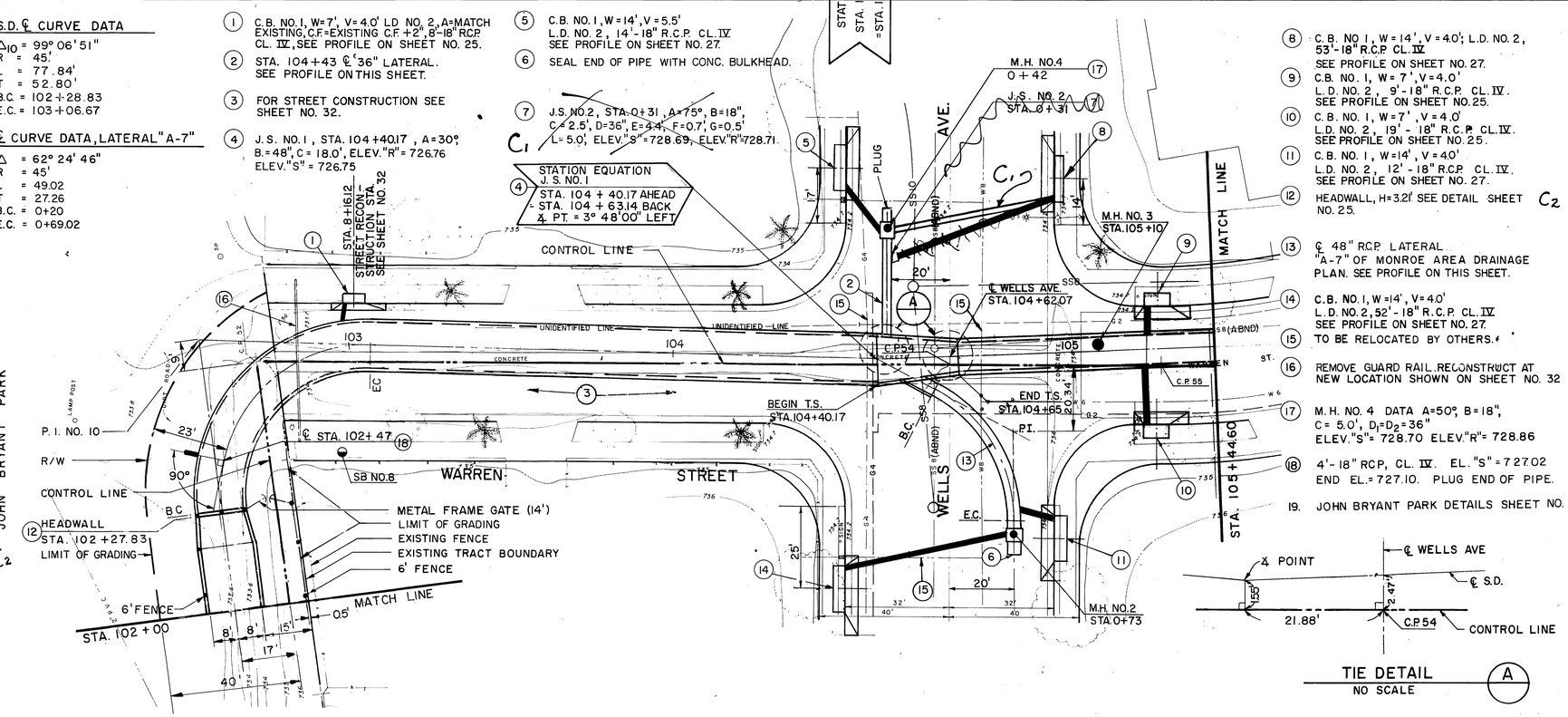

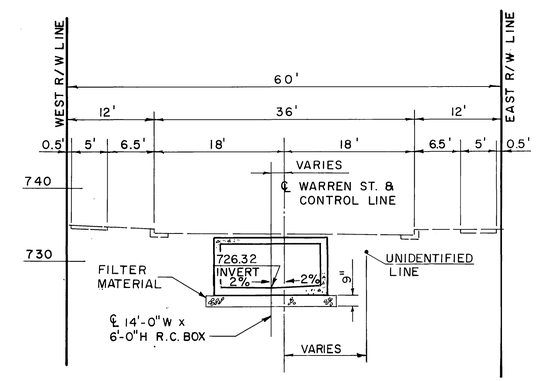

SECTION AT STA. 103 + 56

10' 0 10'

TIE DETAIL (A)
NO SCALE

BENCH MARK C.P. NO. 52
3/4" I.P. ON THE ℄ OF WARREN STREET 6' N'LY OF TRACT BOUNDARY — ELEV. 733.787

SCALE:

DATE:

ALDERMAN SWIFT & LEWIS CONSULTING ENGINEERS

APPROVED BY

DATE April 24, 1974

REGISTERED CIVIL ENGINEER NO. C1843

REVISIONS			
C2	Headwall changed to 12" Thick	D.D.G.	10.26.77
C1	Connector Pipe Relocated As Shown	A.D.G.	10.26.77
REF.	DESCRIPTION	APPR.	DATE

AS BUILT

RIVERSIDE COUNTY FLOOD CONTROL AND WATER CONSERVATION DISTRICT

DESIGNED BY: K.E.K.
DRAWN BY: R.D.F.
DATE DRAWN: OCT. 1973
CHECKED BY: R.D.C. – G.L.H.

APPROVED BY: John W. Bryant
CHIEF ENGINEER R.E. NO. 8822
DATE: 2-26-76

ANZA CHANNEL
STAGE II
STA. 102+00 TO STA. 105+44.60
1970 STORM DRAIN BOND ISSUE PROJECT NO. 18

INDEX 68

PROJECT NO. 1-0-150
DRAWING NO. 1-319
SHEET NO. 7 OF 81

D-353

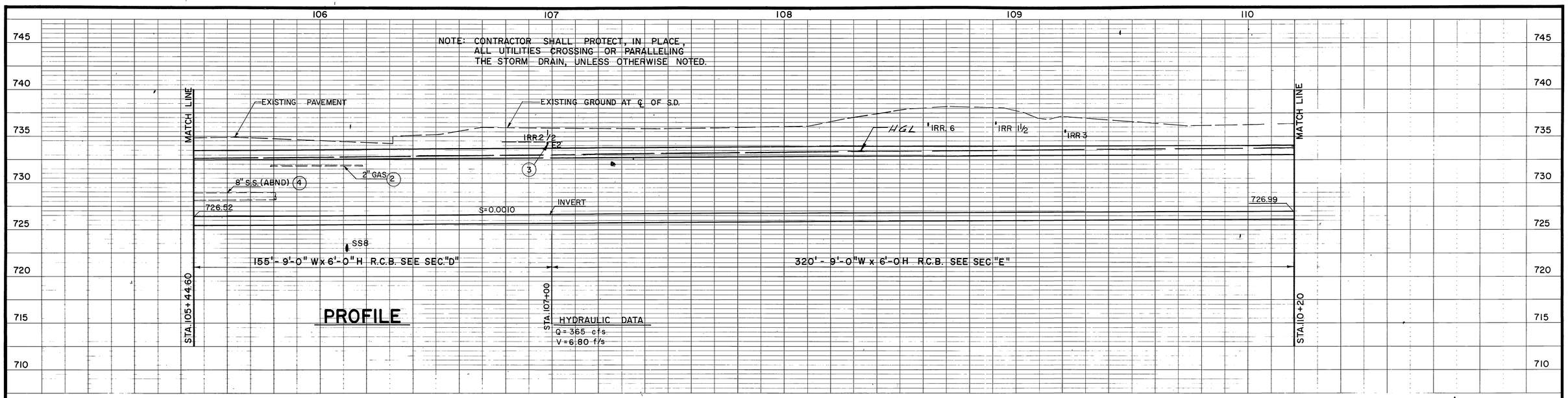

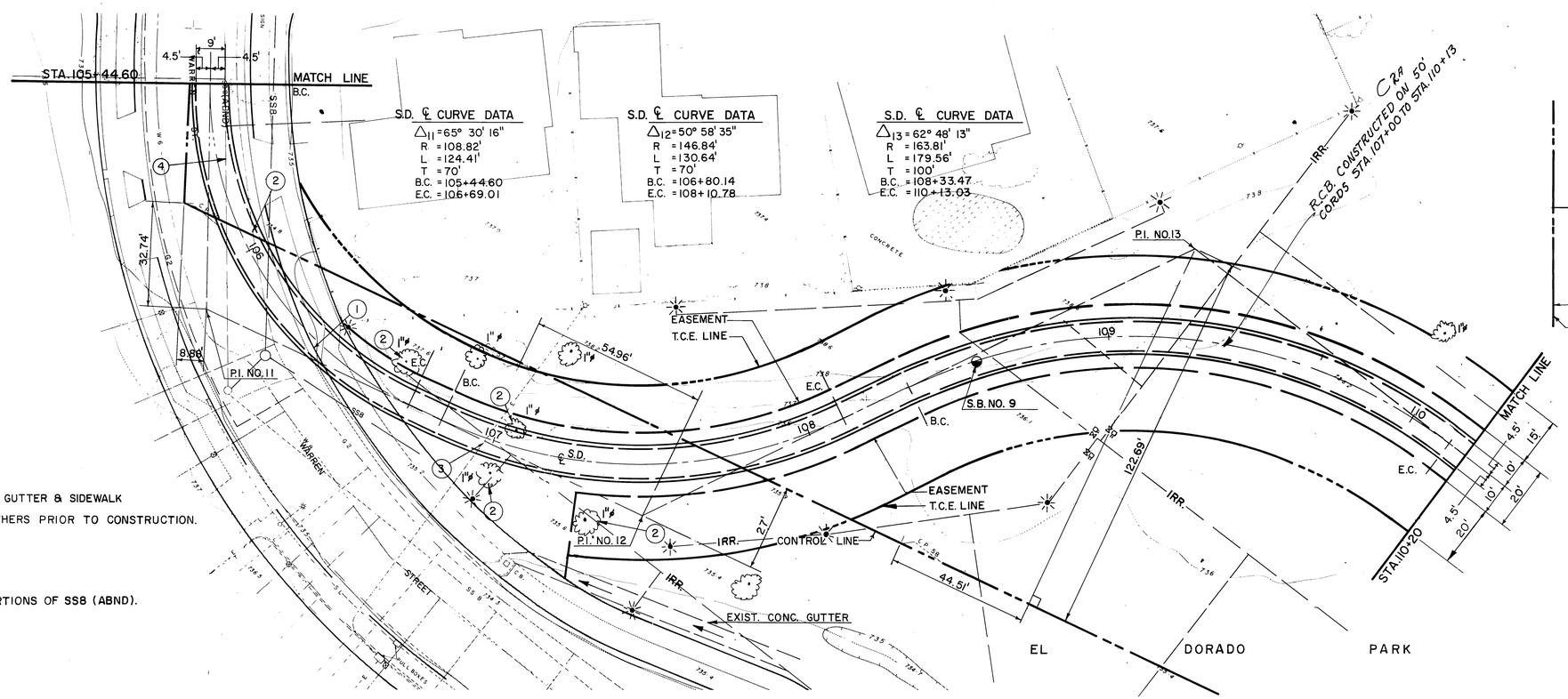

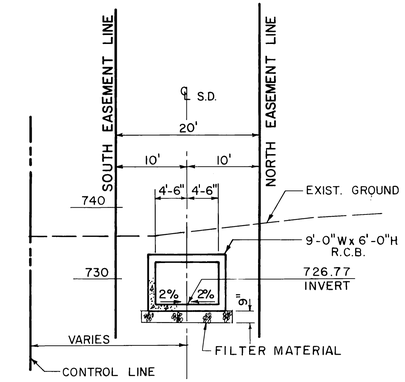

SECTION AT STA. 108+15

10 0 10

1. REMOVE AND REPLACE CURB, GUTTER & SIDEWALK
2. TO BE RELOCATED BY OTHERS PRIOR TO CONSTRUCTION.
3. EMPTY DUCT.
4. REMOVE INTERFERING PORTIONS OF SS8 (ABND). PLUG EXPOSED ENDS.

PLAN

1" = 20'

20' 0 20'

BENCH MARK C.P 57
1x2 HUB 117'± SOUTHEASTERLY OF WARREN ST.
ELEV. 737.99

SCALE:

DATE:

ALDERMAN SWIFT & LEWIS CONSULTING ENGINEERS

APPROVED BY

DATE April 29, 1974

REGISTERED CIVIL ENGINEER NO. 11643

REVISIONS			
		WDG	14
C2A REF.	R.C.B. 50' CORDS USED DESCRIPTION	WDG APPR.	(4-DEC-77) DATE

AS BUILT

RIVERSIDE COUNTY FLOOD CONTROL AND WATER CONSERVATION DISTRICT

DESIGNED BY: T.V.P.
DRAWN BY: E.C.H.
DATE DRAWN: OCT. 1973
CHECKED BY: R.D.C., G.L.H.

APPROVED BY: John V. Bryant
CHIEF ENGINEER R.E. NO. 8822
DATE: 2-26-76

ANZA CHANNEL
STAGE II
STA.105+44.60 TO STA.110+20
1970 STORM DRAIN BOND ISSUE PROJECT NO. 18

INDEX UF

PROJECT NO. 1-0-150
DRAWING NO. 1-319
SHEET NO. 8 OF 81

D-353

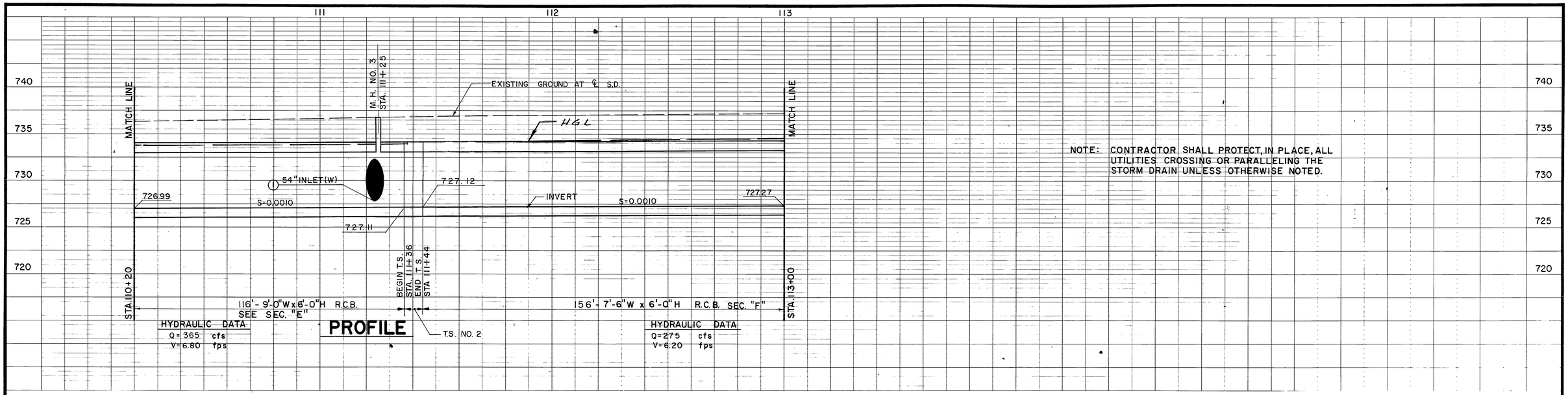

NOTE: CONTRACTOR SHALL PROTECT, IN PLACE, ALL UTILITIES CROSSING OR PARALLELING THE STORM DRAIN UNLESS OTHERWISE NOTED.

(1) J.S. NO. 1, STA. 111+ 6.20, A=30°, B=54", C=17', ELEV. "R"=727.87, ELEV. "S"=727.86.

(2) 4'-54" R.C.P. 1200-D END ELEV. 727.88, SEAL END OF PIPE WITH CONCRETE BULKHEAD.

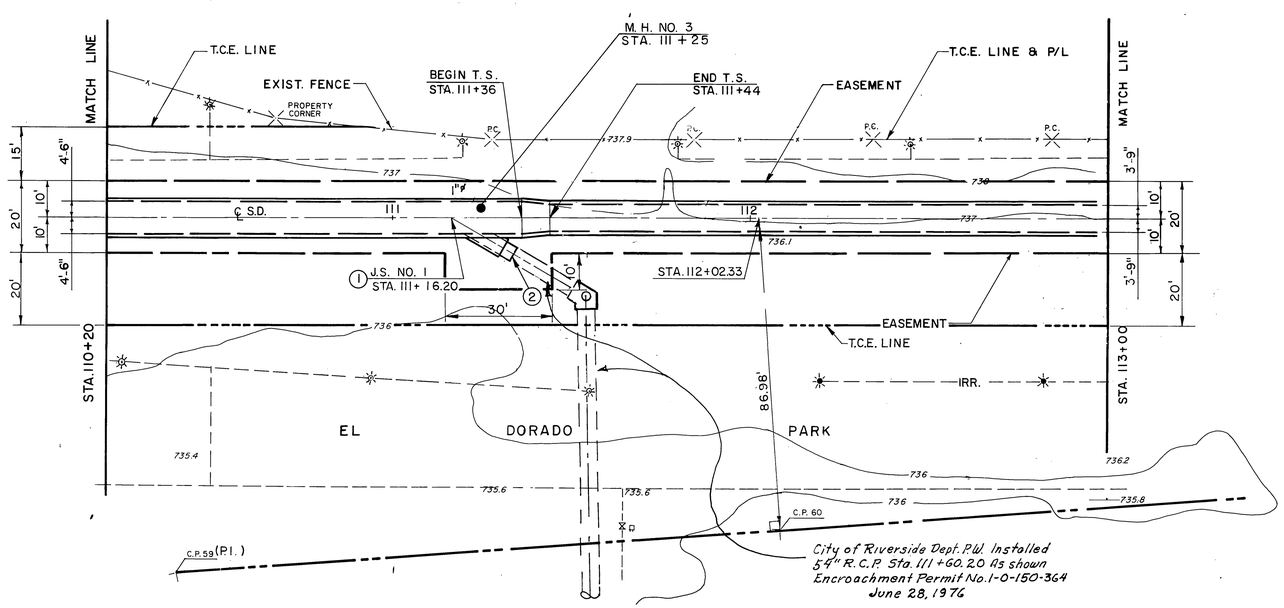

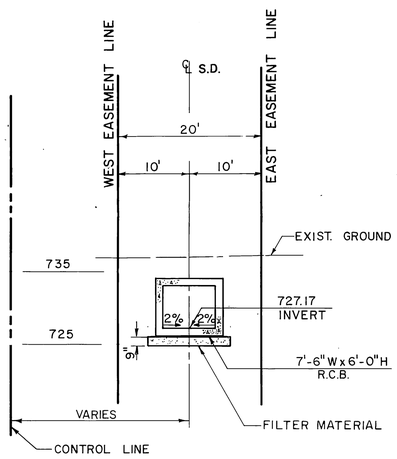

SECTION AT STA. 112+00

10 0 10

PLAN

1" = 20'

20' 0 20'

735.3 735.4

BENCH MARK C.P. 59
2x2 HUB ON SURVEY CONTROL LINE 497' SOUTHEASTERLY OF WARREN STREET. ELEV. 735.34

SCALE:

DATE:

ALDERMAN & SWIFT & LEWIS CONSULTING ENGINEERS

APPROVED BY

DATE April 26, 1974

REGISTERED CIVIL ENGINEER NO. 11543

REVISIONS			
No Changes			
REF.	DESCRIPTION	APPR.	DATE

AS BUILT

RIVERSIDE COUNTY FLOOD CONTROL AND WATER CONSERVATION DISTRICT

DESIGNED BY: T.V.P.
DRAWN BY: E.C.H.
DATE DRAWN: OCT. 1973
CHECKED BY: R.D.C., G.L.H.

APPROVED BY:
CHIEF ENGINEER R.E. NO. 8822
DATE: 2-26-74

ANZA CHANNEL
STAGE II
STA. 110+20 TO STA. 113+00
1970 STORM DRAIN BOND ISSUE PROJECT NO. 18

INDEX WP

PROJECT NO. 1-0-150
DRAWING NO. 1-319
SHEET NO. 9 OF 81

D-353

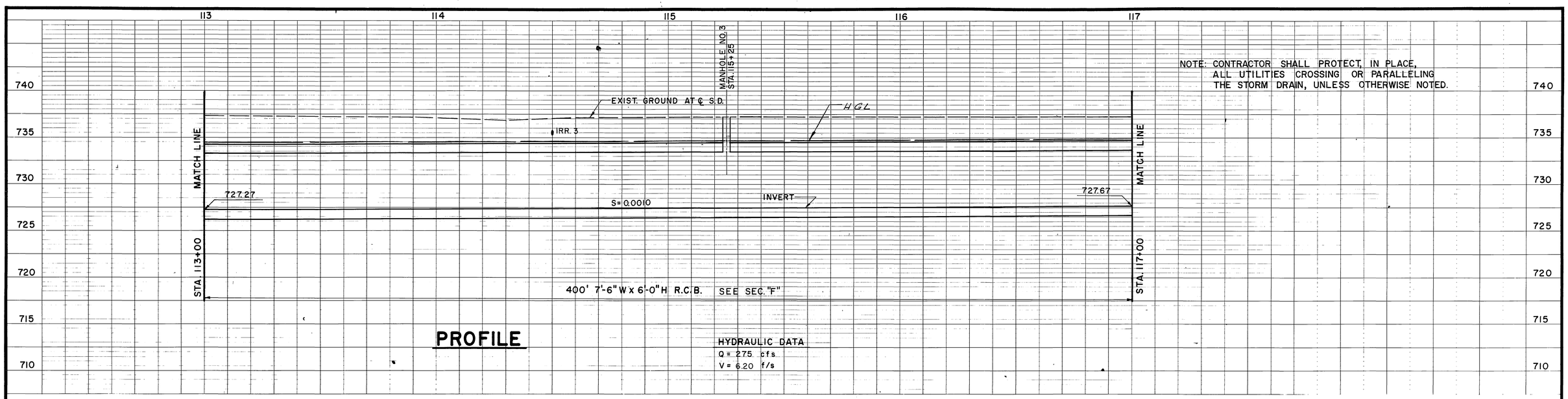

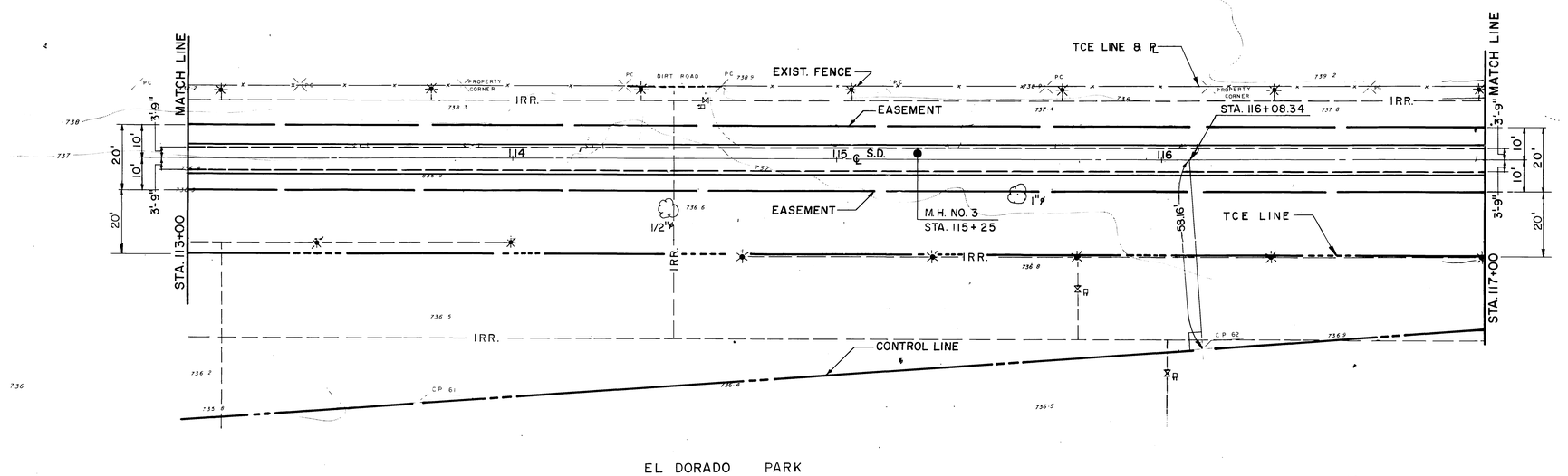

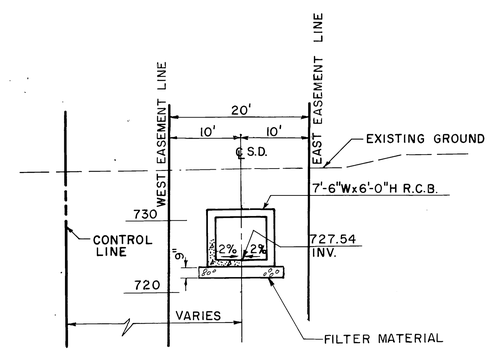

SECTION AT STA. 115+65

10' 0' 10'

PLAN

1" = 20'

20' 0 20'

BENCH MARK C.P. 61
1x2 HUB 332' SOUTHEASTERLY OF P.I. ON SURVEY CONTROL LINE. ELEV. 736.094

SCALE:

DATE:

ALDERMAN SWIFT & LEWIS CONSULTING ENGINEERS

APPROVED BY

DATE April 26, 1976

REGISTERED CIVIL ENGINEER NO. 11543

REVISIONS			
	No Changes		
REF.	DESCRIPTION	APPR.	DATE

RIVERSIDE COUNTY FLOOD CONTROL AND WATER CONSERVATION DISTRICT

DESIGNED BY: T.V.P.
DRAWN BY: J.A.C.
DATE DRAWN: OCT. 1973
CHECKED BY: R.D.C. G.L.H.

APPROVED BY:
CHIEF ENGINEER R.E. NO. 8822
DATE: 2-26-76

ANZA CHANNEL
STAGE II
STA. 113+00 TO STA. 117+00
1970 STORM DRAIN BOND ISSUE PROJECT NO. 18

INDEX UP

PROJECT NO. 1-0-150
DRAWING NO. 1-319
SHEET NO. 10 OF 81

A.S. BUILT

D-353

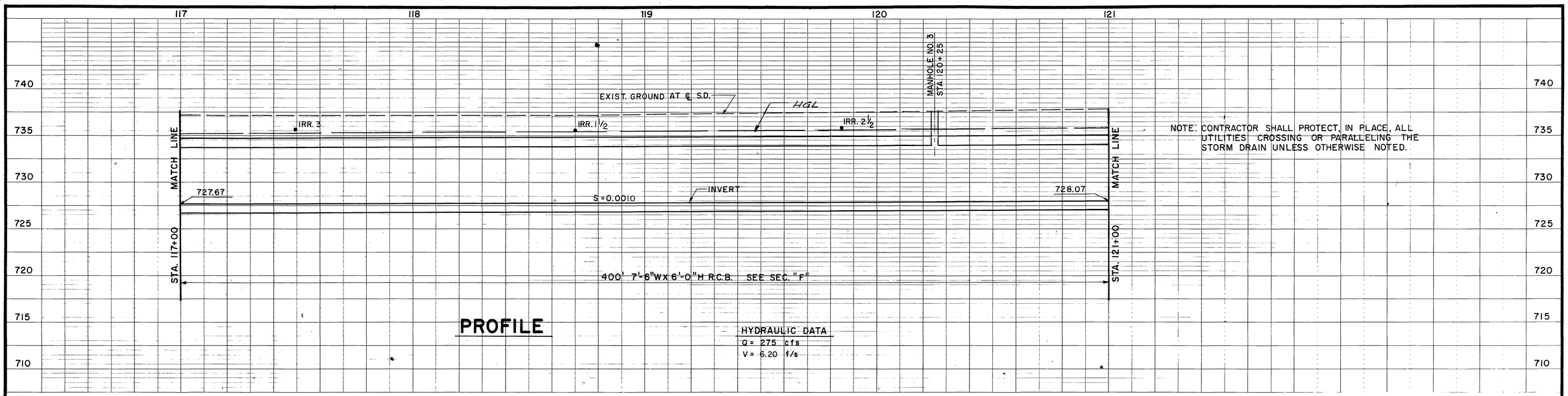

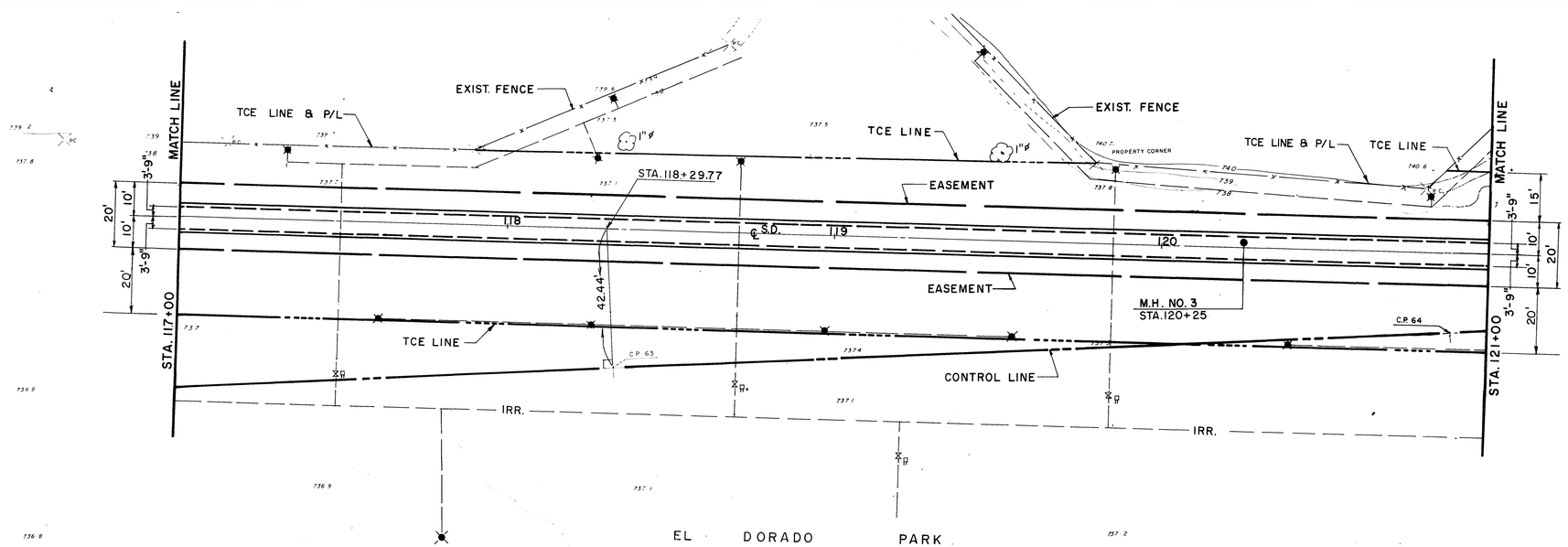

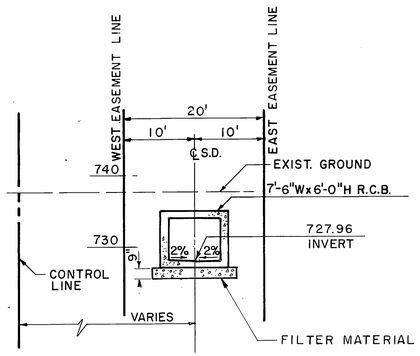

SECTION AT STA. 119+87

10' 0 10'

PLAN

1" = 20'

20' 0 20'

BENCH MARK C.P. 64
1x2 HUB 171' NORTH WESTERLY OF REMINGTON STREET
ELEV. 737.535

SCALE:

DATE:

ALDERMAN SWIFT & LEWIS CONSULTING ENGINEERS

APPROVED BY

DATE April 24, 1974

REGISTERED CIVIL ENGINEER NO. 16-43

REVISIONS			
REF.	DESCRIPTION	APPR.	DATE
	No Changes		

RIVERSIDE COUNTY FLOOD CONTROL AND WATER CONSERVATION DISTRICT

DESIGNED BY: K.E.K.
DRAWN BY: J.A.C.
DATE DRAWN: OCT. 1973
CHECKED BY: R.D.C.-G.L.H.

APPROVED BY:
CHIEF ENGINEER R.E. NO. 8822
DATE: 2-26-76

ANZA CHANNEL
STAGE II
STA. 117+00 TO STA. 121+00
1970 STORM DRAIN BOND ISSUE PROJECT NO. 18

INDEX 6

PROJECT NO. 1-0-150
DRAWING NO. 1-319
SHEET NO. 11 OF 81

AS BUILT

D-353

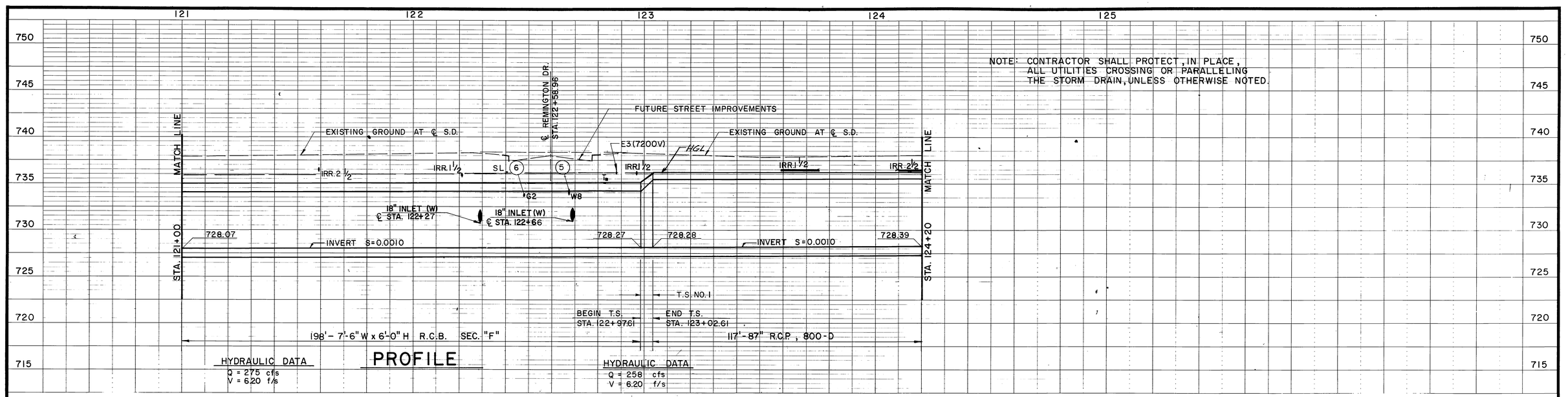

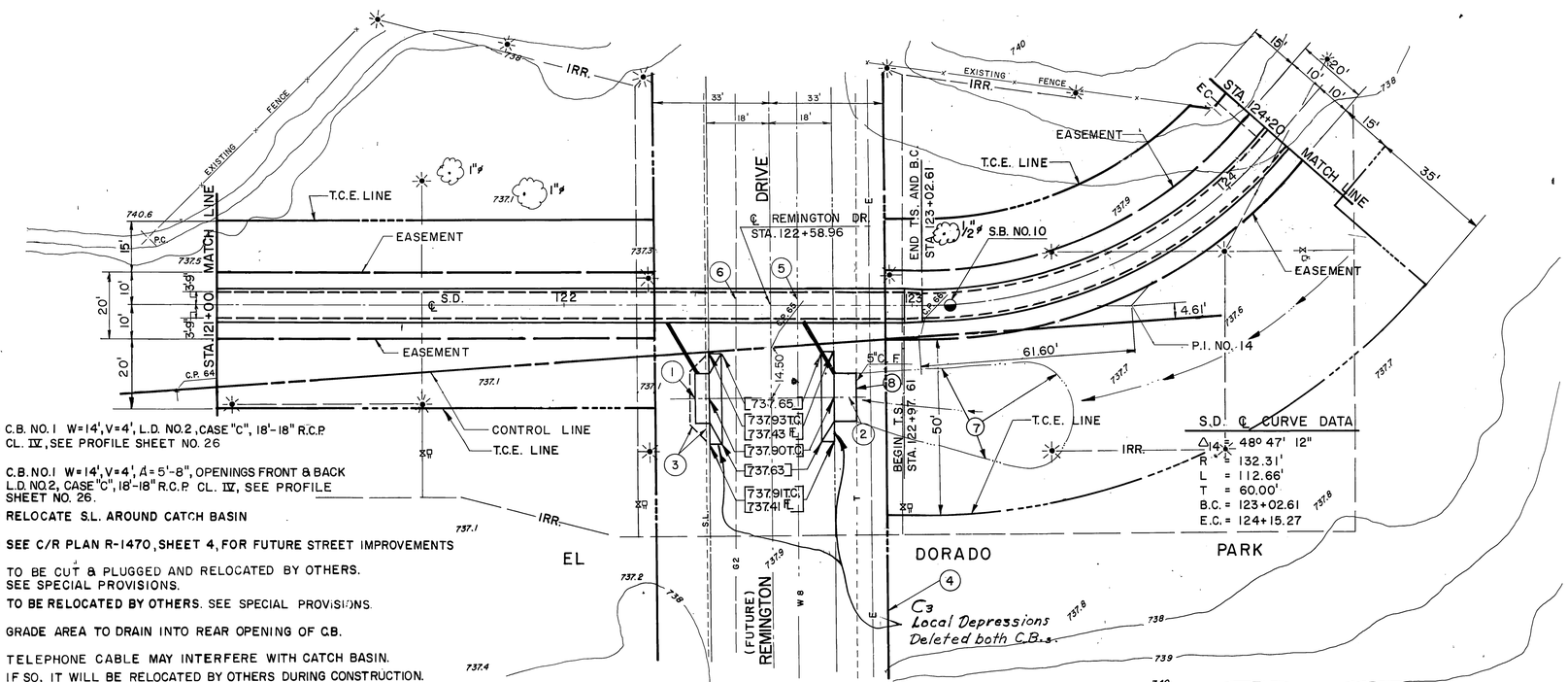

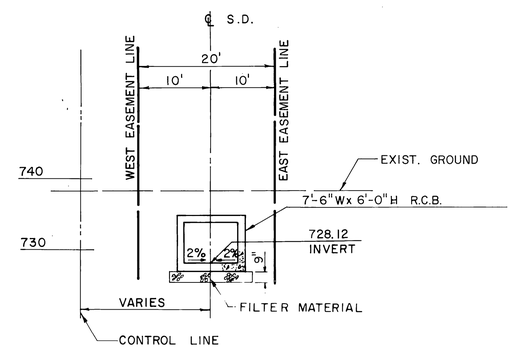

SECTION AT STA. 121+50

10 0 10

1. C.B. NO. 1 W=14', V=4', L.D. NO. 2, CASE "C", 18'-18" R.C.P. CL. IV, SEE PROFILE SHEET NO. 26
2. C.B. NO. 1 W=14', V=4', Δ=5'-8", OPENINGS FRONT & BACK L.D. NO. 2, CASE "C", 18'-18" R.C.P. CL. IV, SEE PROFILE SHEET NO. 26.
3. RELOCATE S.L. AROUND CATCH BASIN
4. SEE C/R PLAN R-1470, SHEET 4, FOR FUTURE STREET IMPROVEMENTS
5. TO BE CUT & PLUGGED AND RELOCATED BY OTHERS. SEE SPECIAL PROVISIONS.
6. TO BE RELOCATED BY OTHERS. SEE SPECIAL PROVISIONS.
7. GRADE AREA TO DRAIN INTO REAR OPENING OF C.B.
8. TELEPHONE CABLE MAY INTERFERE WITH CATCH BASIN. IF SO, IT WILL BE RELOCATED BY OTHERS DURING CONSTRUCTION.

PLAN

1" = 20'

20' 0 20'

BENCH MARK C.P. 65
1x2 HUB AT THE CENTER LINE OF REMINGTON DRIVE AND SURVEY CONTROL LINE.
ELEV. 737.86

SCALE:

DATE:

ALDERMAN SWIFT & LEWIS CONSULTING ENGINEERS

APPROVED BY

DATE April 24, 1974

REGISTERED CIVIL ENGINEER NO. 11543

REVISIONS

REF.	DESCRIPTION	APPR.	DATE
C3	Local Depression Deleted	WDG	4-24-77

AS BUILT

RIVERSIDE COUNTY FLOOD CONTROL AND WATER CONSERVATION DISTRICT

DESIGNED BY: T.V.P.
DRAWN BY: T.L.K.
DATE DRAWN: OCT. 1973
CHECKED BY: R.D.C. G.L.H.

APPROVED BY:
CHIEF ENGINEER R.E. NO. 8822
DATE: 2-26-76

ANZA CHANNEL
STAGE II
STA. 121+00 TO STA. 124+20
1970 STORM DRAIN BOND ISSUE PROJECT NO. 18

INDEX UP

PROJECT NO. 1-0-150
DRAWING NO. 1-319
SHEET NO. 12 OF 81

D-353

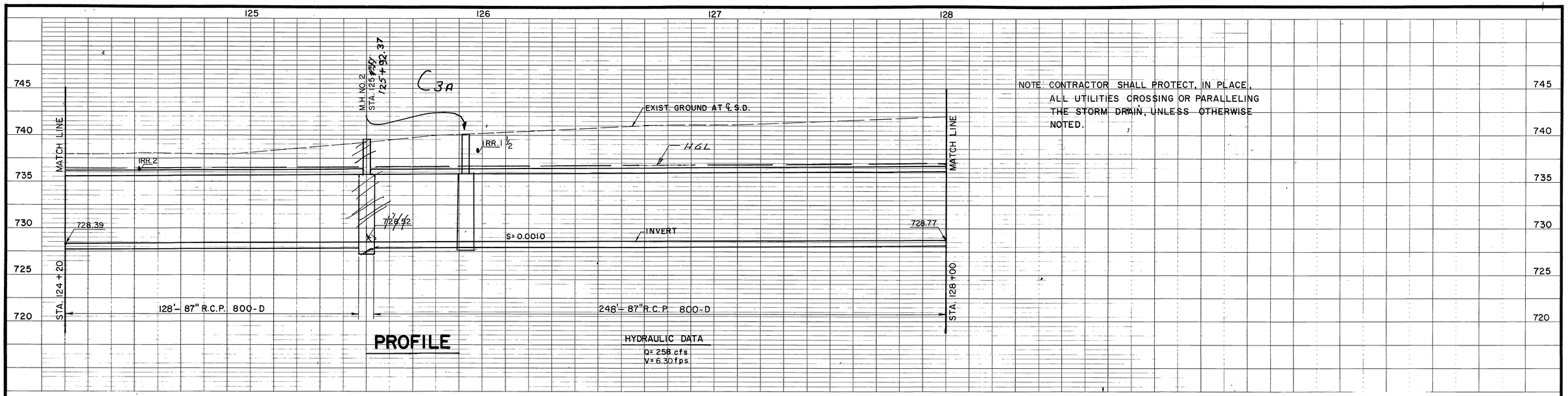

NOTE: CONTRACTOR SHALL PROTECT, IN PLACE, ALL UTILITIES CROSSING OR PARALLELING THE STORM DRAIN, UNLESS OTHERWISE NOTED.

PROFILE

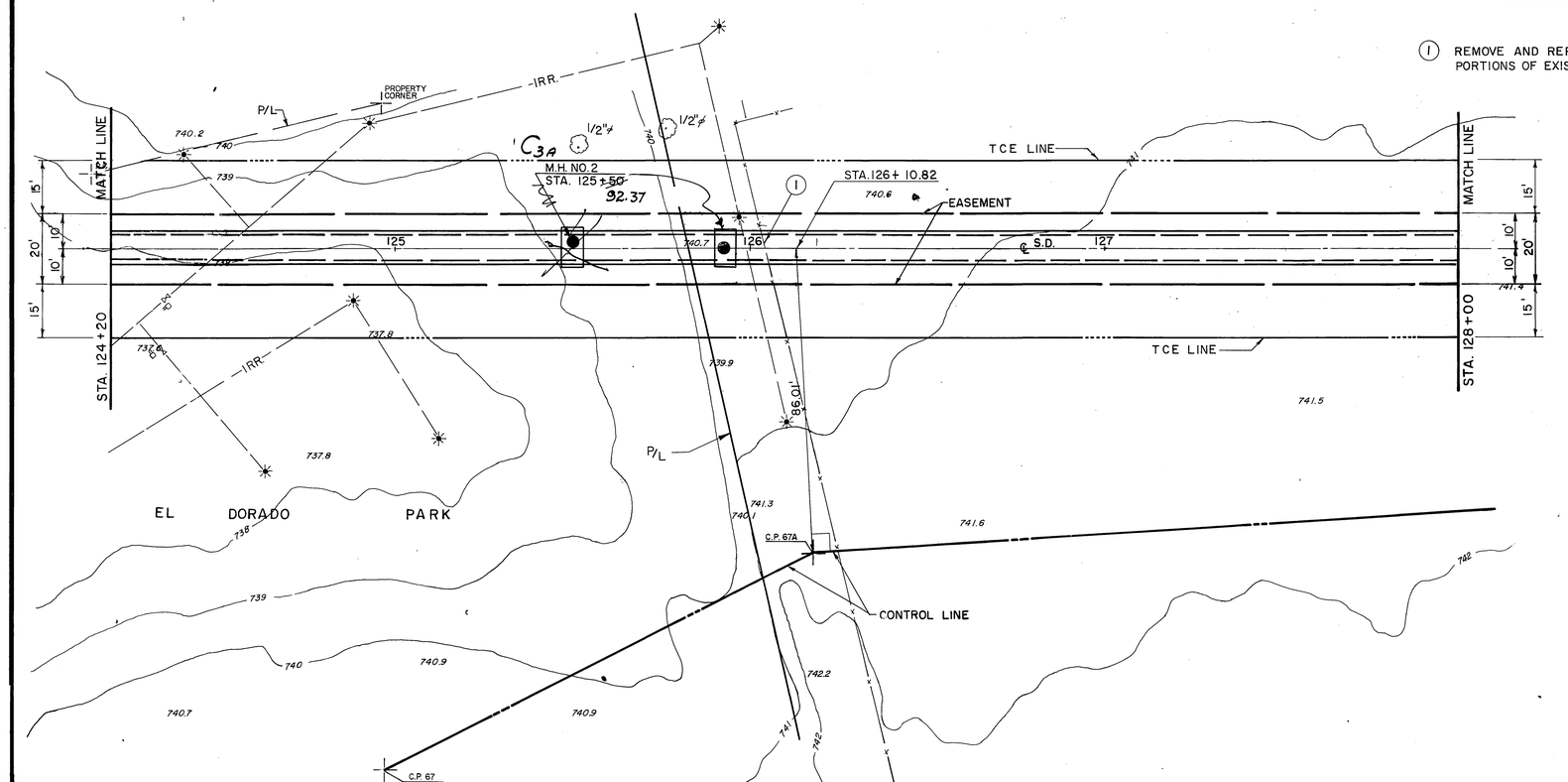

(1) REMOVE AND REPLACE INTERFERING PORTIONS OF EXISTING FENCE.

PLAN

1" = 20'

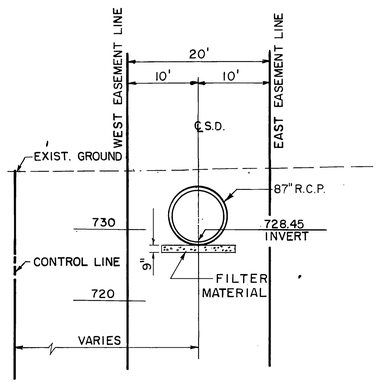

SECTION AT STA. 124+80

10' 0 10'

BENCH MARK C.P. 67
1x2 HUB 307' ± SOUTHEAST OF REMINGTON DRIVE.
ELEV. 740.84

SCALE:

DATE:

ALDERMAN SWIFT & LEWIS CONSULTING ENGINEERS

APPROVED BY

DATE April 24, 1974

REGISTERED CIVIL ENGINEER NO. 11543

REVISIONS			
C3A	MH Location Changed		
REF.	DESCRIPTION	APPR.	DATE

AS BUILT

RIVERSIDE COUNTY FLOOD CONTROL AND WATER CONSERVATION DISTRICT

DESIGNED BY: K.E.K.
DRAWN BY: A. W. S.
DATE DRAWN: OCT 1973
CHECKED BY: R.D.C. – G.L.H.

APPROVED BY:
CHIEF ENGINEER R.E. NO. 8822
DATE: 2-26-76

ANZA CHANNEL
STAGE II
STA. 124+20 TO STA. 128+00
1970 STORM DRAIN BOND ISSUE PROJECT NO. 18

INDEX 4F

PROJECT NO. 1-0-150
DRAWING NO. 1-319
SHEET NO. 13 OF 81

D-353

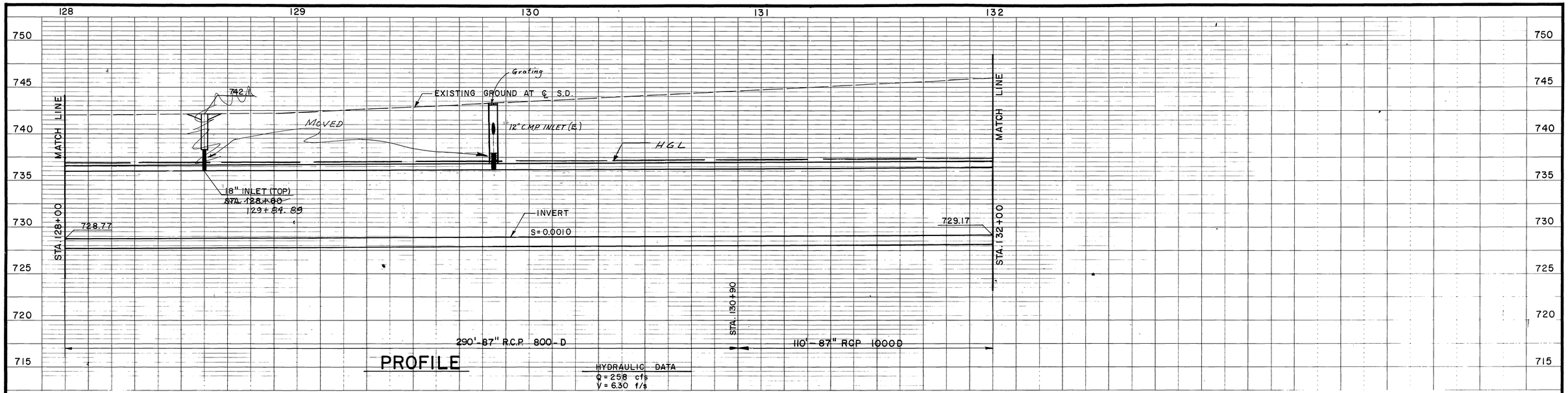

Mr F.J. Teuissen 4510 Van Buren Blvd.
Reconstructed Inlet 18" As shown
in Profile With 12" C.M.P. connected
and 3' Wide x 6" Thick Conc. surface
drainage As shown in Plan Sta. 129+84.89
Encroachment Permit No. 1-0-150-412-5/20/77

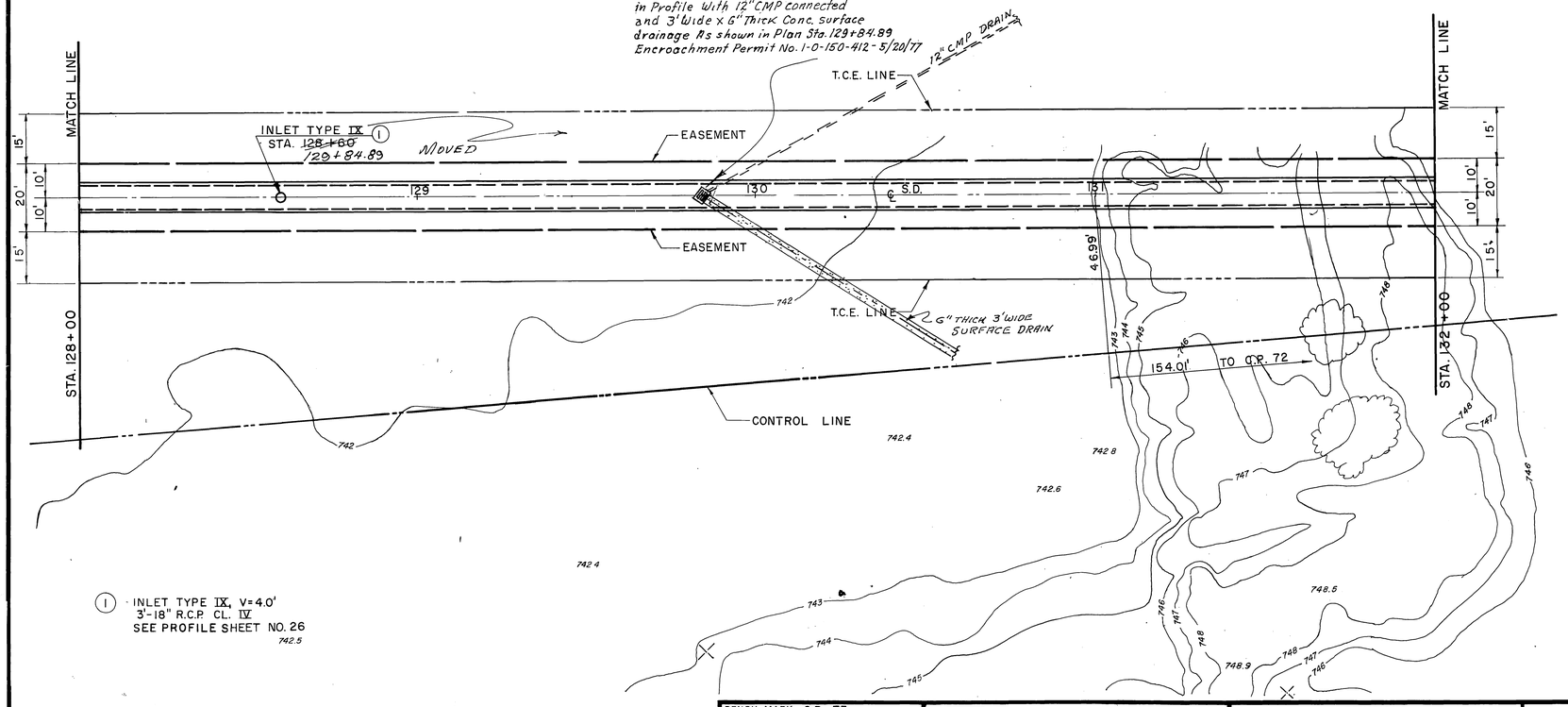

① INLET TYPE IX, V=4.0'
3'-18" R.C.P. CL. IV
SEE PROFILE SHEET NO. 26

PLAN

1" = 20'

20' 0 20'

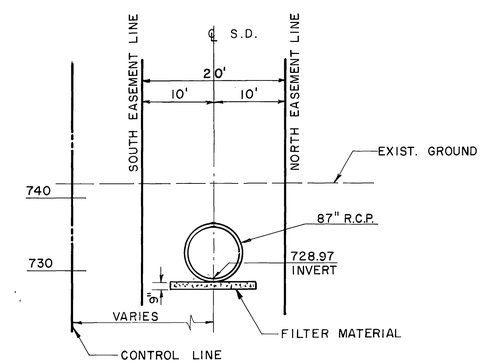

SECTION AT STA. 130+00

10 0 10

BENCH MARK C.P. 73 CHIEF ENGINEERS TAG AT INTERSECTION OF CONTROL LINE AND VAN BUREN BLVD. ELEV. 746.336	APPROVED BY	REVISIONS	RIVERSIDE COUNTY FLOOD CONTROL AND WATER CONSERVATION DISTRICT
SCALE:	ALDERMAN SWIFT & LEWIS CONSULTING ENGINEERS	No Changes	DESIGNED BY: T.V.P. / DRAWN BY: T.L.K. / DATE DRAWN: OCT. 1973 / CHECKED BY: R.D.C. G.L.H.
DATE:	DATE April 24, 1974 / REGISTERED CIVIL ENGINEER NO. 11543	REF. / DESCRIPTION / APPR. / DATE	APPROVED BY: John W. Bryant, CHIEF ENGINEER R.E. NO. 8822 / DATE: 2-26-76

ANZA CHANNEL
STAGE II
STA. 128+00 TO STA. 132+00
1970 STORM DRAIN BOND ISSUE PROJECT NO. 18

INDEX LF
PROJECT NO. 1-0-150
DRAWING NO. 1-319
SHEET NO. 14 OF 81

AS BUILT

D-353

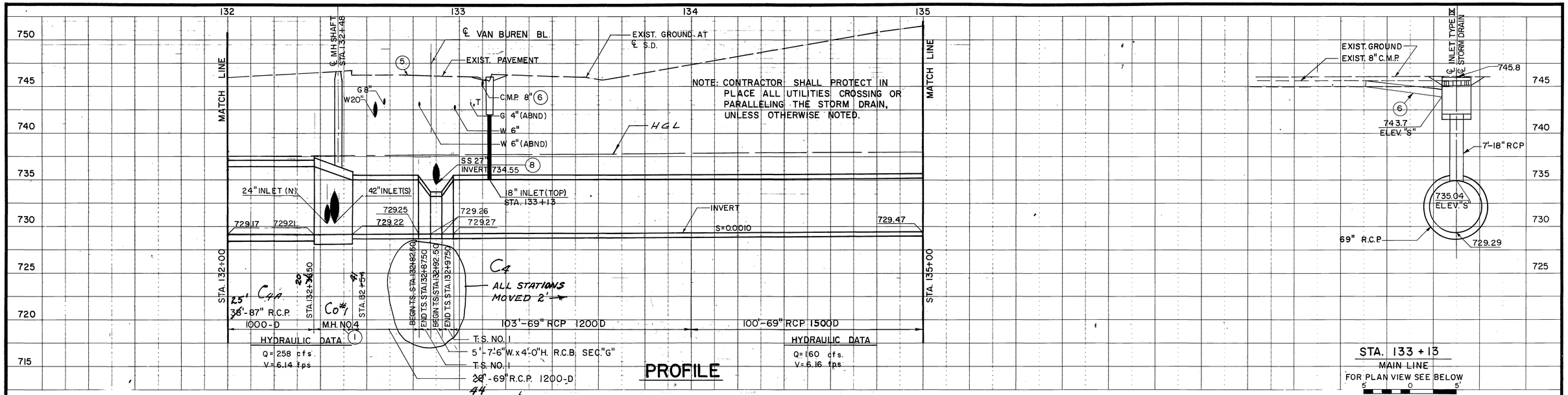

1. M.H. NO. 4 DATA, $A_N = 60°$, $A_S = 30°$, $B_N = 24"$, $B_S = 42"$, $C_N = 7.8'$, $C_S = 13.8'$, $D_1 = 69"$, $D_2 = 87"$, ELEV. "R_N" = 730.35, ELEV. "R_S" = 730.33, ELEV. "S_N" = 730.32, ELEV. "S_S" = 730.32
2. 4'-24" RCP, CL. IV, END ELEV. 730.39. PLUG END.
3. 8'-42" R.C.P., 1400-D, END ELEV. 730.34. PLUG END
4. INLET TYPE IX, V=4.0', 7'-18" RCP, CL. IV. SEE PROFILE THIS SHEET.
5. STREET RESURFACING: 3" A.C. ON 8" CLASS 3 BASE
6. REMOVE INTERFERING PORTION OF EXIST. 8" C.M.P. AND CONNECT INTO INLET TYPE IX. SEE PROFILE THIS SHEET.
7. CUT AND PLUG EXISTING C.M.P., ABANDON IN PLACE
8. SUPPORT 27" S.S.
9. TO BE RELOCATED BY OTHERS PRIOR TO CONSTRUCTION.

S.D. ℄ CURVE DATA

$\Delta_{15} = 48° 09' 00"$
R = 156.67'
L = 131.66'
T = 70.00'
B.C. = STA. 132+18.22
E.C. = STA. 133+49.88

LATERAL CURVE DATA

Δ = 37° 50' 03"
R = 22.50'
L = 14.86'
T = 7.71'
B.C. = STA. 0+12.29
E.C. = STA. 0+27.15

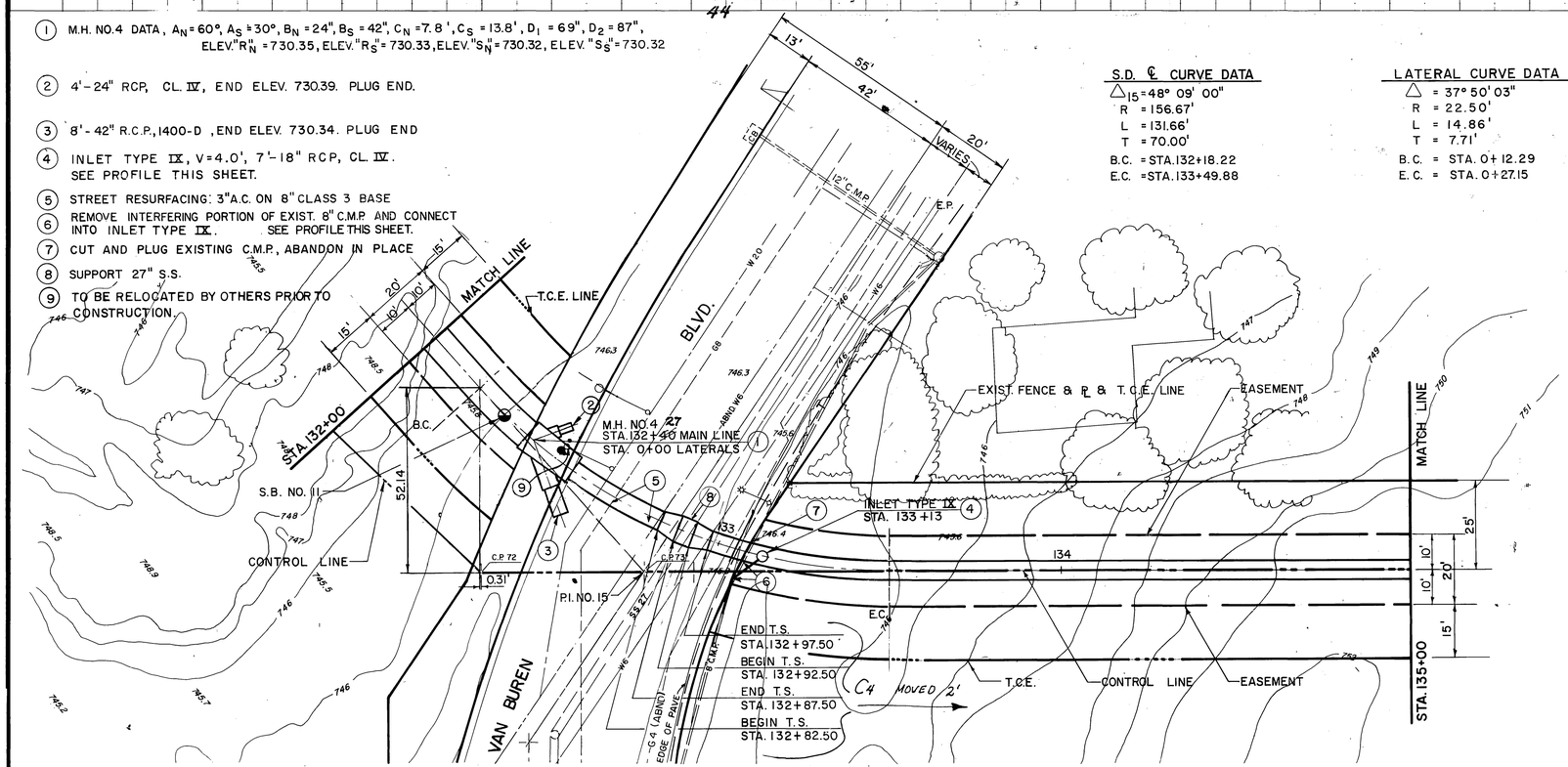

PLAN

1" = 20'

20' 0 20'

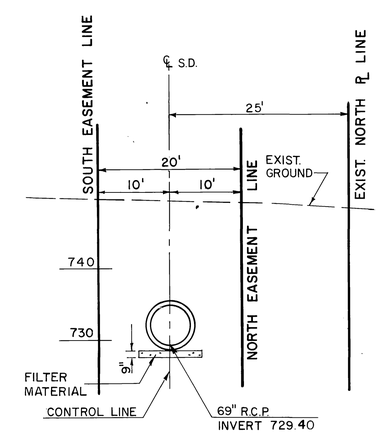

SECTION AT STA. 134+30

10 0 10

BENCH MARK C.P. 73 EL. 746.34
CHIEF ENGINEERS TAG AT INTERSECTION OF SURVEY CONTROL LINE & VAN BUREN BLVD

SCALE:

DATE:

ALDERMAN SWIFT & LEWIS CONSULTING ENGINEERS

APPROVED BY

DATE April 24, 1974

REGISTERED CIVIL ENGINEER NO. 11943

REVISIONS			
C4A	M.H. No. 4 Sta. changed	D.T.S.	7-15-76
C4	T.S. Moved 2', Pipe length changed	D.T.S.	12-28-77
REF.	DESCRIPTION	APPR.	DATE

RIVERSIDE COUNTY FLOOD CONTROL AND WATER CONSERVATION DISTRICT

DESIGNED BY: K.E.K.
DRAWN BY: E.C.H.
DATE DRAWN: OCT. 1973
CHECKED BY: R.D.C., G.L.H.

APPROVED BY: John W. Bryant, CHIEF ENGINEER R/E NO. 8822
DATE: 2-26-76

ANZA CHANNEL
STAGE II
STA. 132+00 TO STA. 135+00
1970 STORM DRAIN BOND ISSUE PROJECT NO. 18

INDEX 6

PROJECT NO. 1-0-150
DRAWING NO. 1-319
SHEET NO. 15 OF 81

AS BUILT

D-353

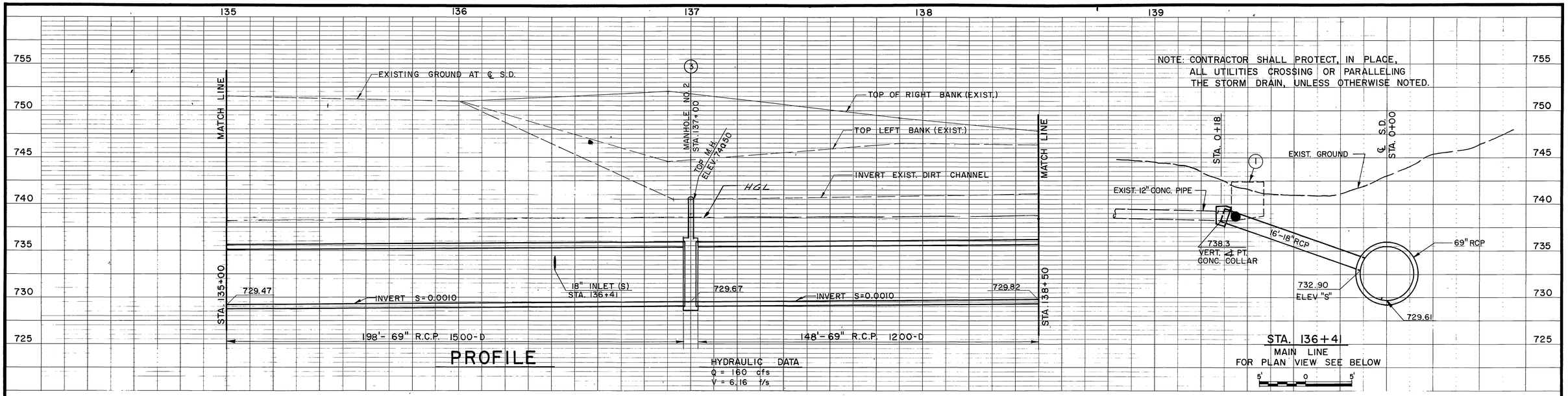

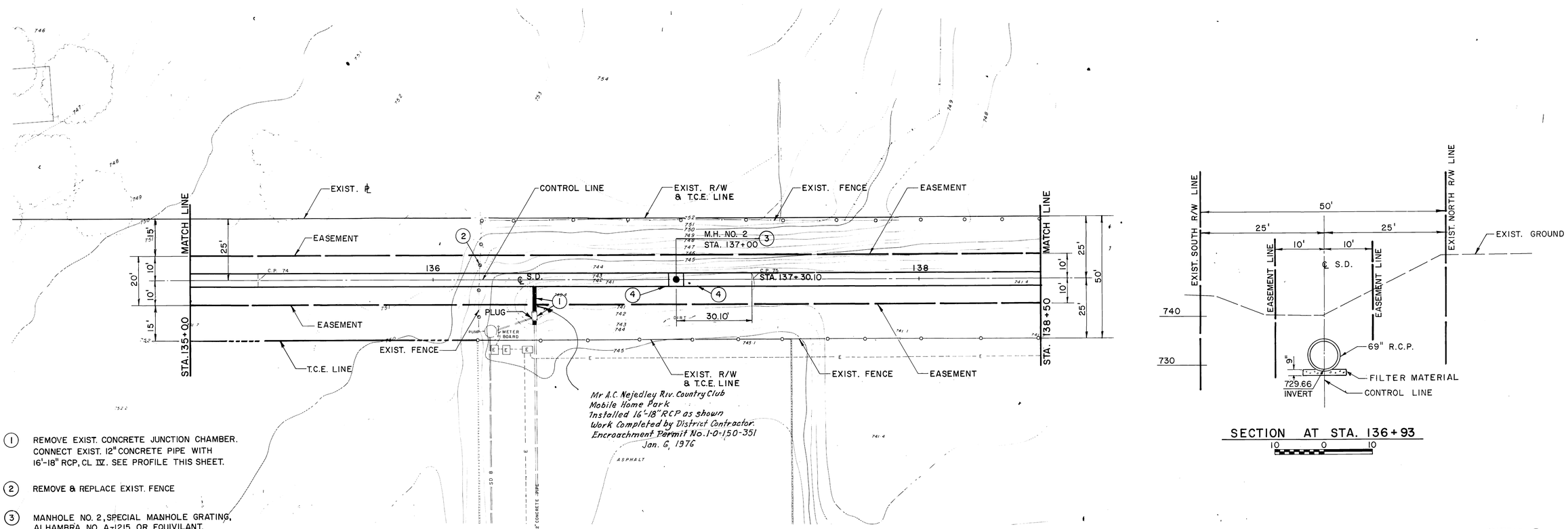

(1) REMOVE EXIST. CONCRETE JUNCTION CHAMBER. CONNECT EXIST. 12" CONCRETE PIPE WITH 16'-18" RCP, CL IV. SEE PROFILE THIS SHEET.

(2) REMOVE & REPLACE EXIST. FENCE

(3) MANHOLE NO. 2, SPECIAL MANHOLE GRATING, ALHAMBRA NO. A-1215 OR EQUIVILANT.

(4) GRADE TO DRAIN FROM ALL DIRECTIONS.

PLAN

1" = 20'

20' 0 20'

BENCH MARK C.P. 75
1x2 HUB 436'± NORTHEASTERLY OF VAN BUREN BLVD.
ELEV. 740.99

SCALE:

DATE:

ALDERMAN SWIFT & LEWIS CONSULTING ENGINEERS

APPROVED BY

DATE April 24, 1974

REGISTERED CIVIL ENGINEER NO. 16143

REVISIONS			
REF.	DESCRIPTION	APPR.	DATE
	No Changes		

RIVERSIDE COUNTY FLOOD CONTROL AND WATER CONSERVATION DISTRICT

DESIGNED BY: K.E.K.
DRAWN BY: T.L.K.
DATE DRAWN: OCT. 1973
CHECKED BY: R.D.C. – G.L.H.

APPROVED BY: Robert W. Bryant
CHIEF ENGINEER R.E. 8822
DATE: 2-26-76

ANZA CHANNEL
STAGE II
STA. 135+00 TO STA. 138+50
1970 STORM DRAIN BOND ISSUE PROJECT NO. 18

INDEX 45

PROJECT NO. 1-0-150
DRAWING NO. 1-319
SHEET NO. 16 OF 81

AS BUILT

D-353

PROFILE

HYDRAULIC DATA

Q =	160 cfs
V =	6.16 f/s

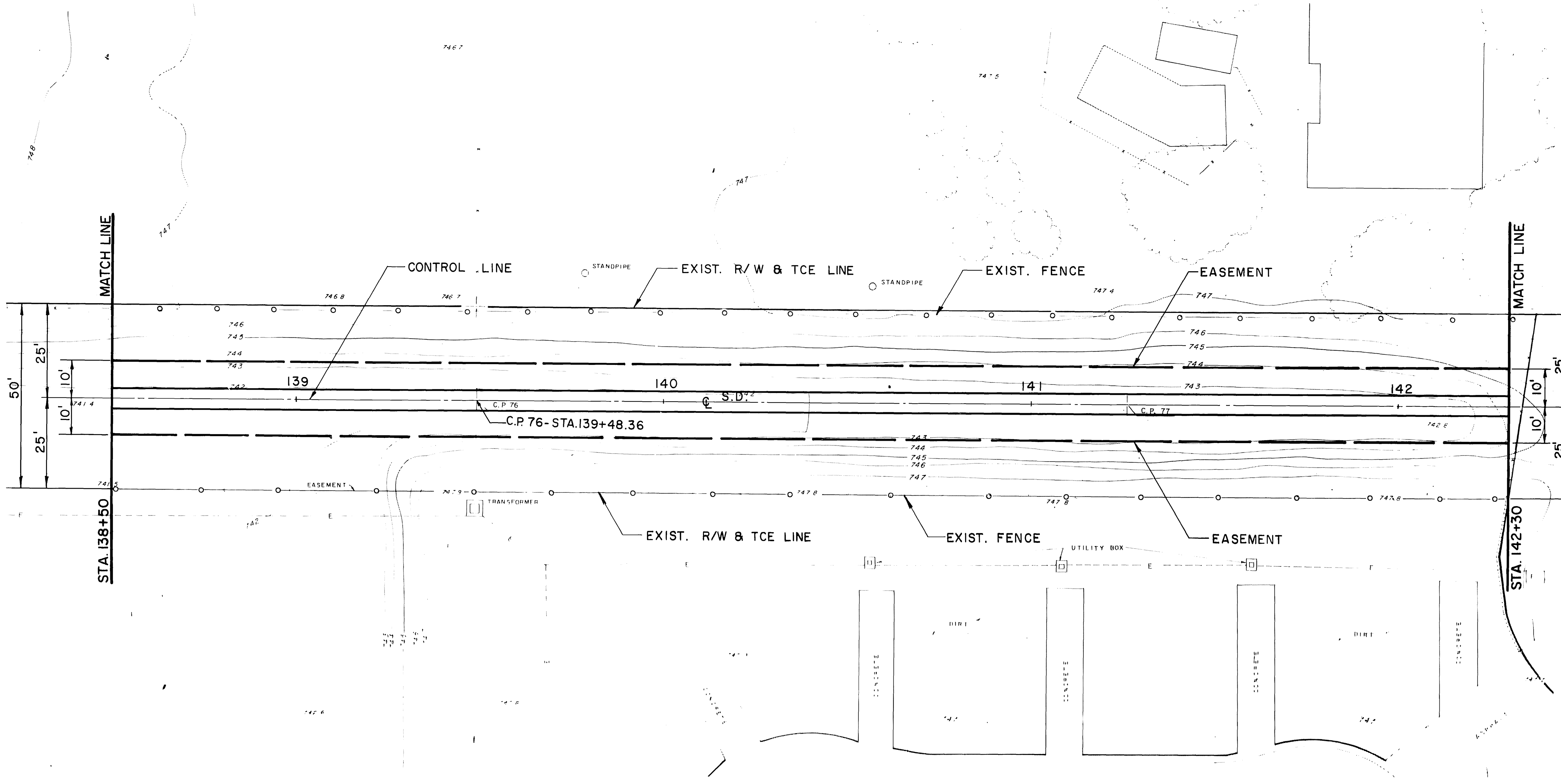

PLAN

1" = 20'

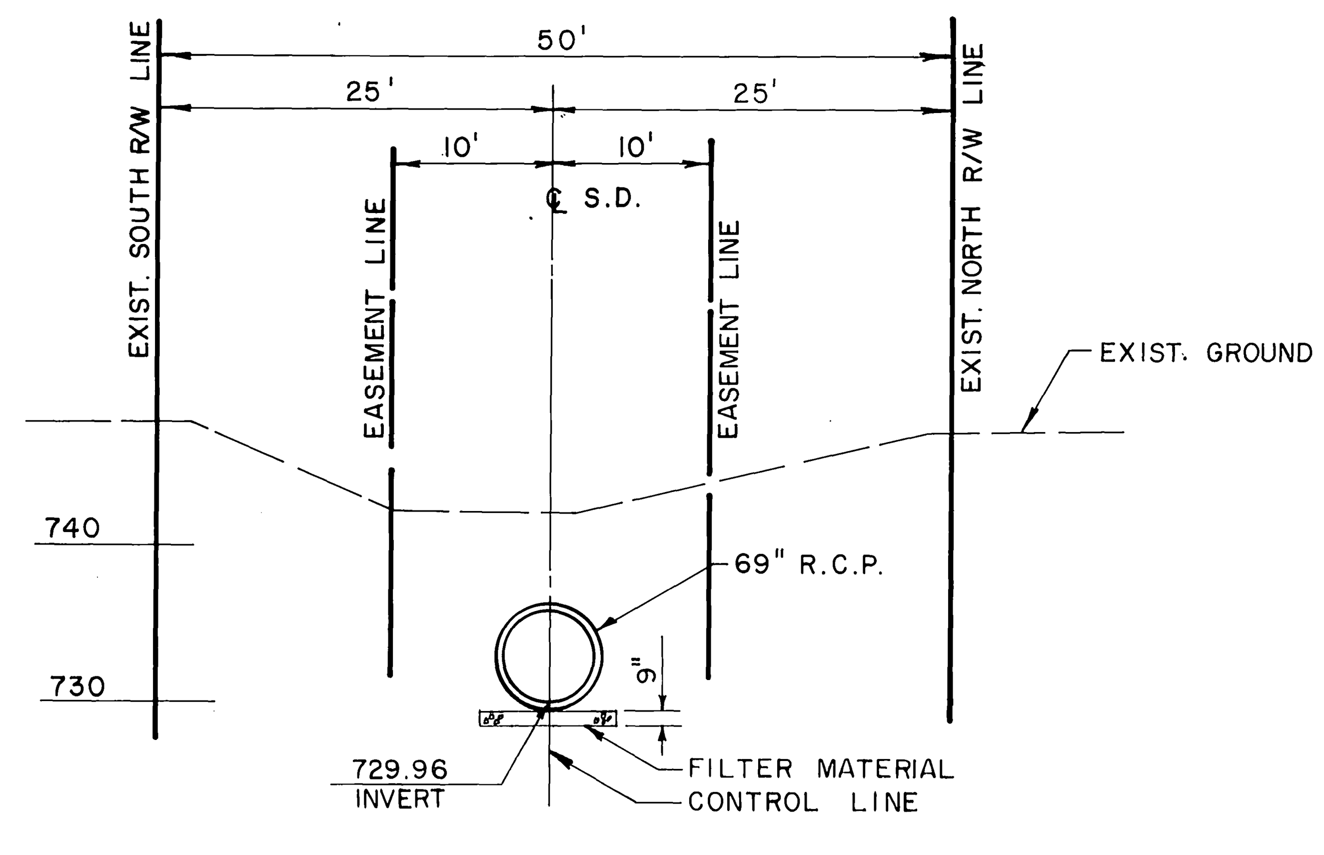

SECTION AT STA. 139+93

BENCH MARK C.P. 77
1x2 HUB 152' ± SOUTHWESTERLY OF NELLIE STREET.
ELEV. 742.722
SCALE:
DATE:

ALDERMAN SWIFT & LEWIS CONSULTING ENGINEERS
APPROVED BY
DATE April 24, 1974
REGISTERED CIVIL ENGINEER NO. 15543

REVISIONS

REF.	DESCRIPTION	APPR.	DATE
	No Changes		

AS BUILT

RIVERSIDE COUNTY FLOOD CONTROL AND WATER CONSERVATION DISTRICT

DESIGNED BY: K.E.K.
DRAWN BY: T.L.K.
DATE DRAWN: OCT. 1973
CHECKED BY: R.D.C-G.L.H.
APPROVED BY: John W. Bryant
CHIEF ENGINEER R.E. NO. 8822
DATE: 2-26-76

ANZA CHANNEL
STAGE II
STA. 138+50 TO STA. 142+30
1970 STORM DRAIN BOND ISSUE PROJECT NO. 18

INDEX WF
PROJECT NO 1-0-150
DRAWING NO. 1-319
SHEET NO. 17 OF 81

D-353

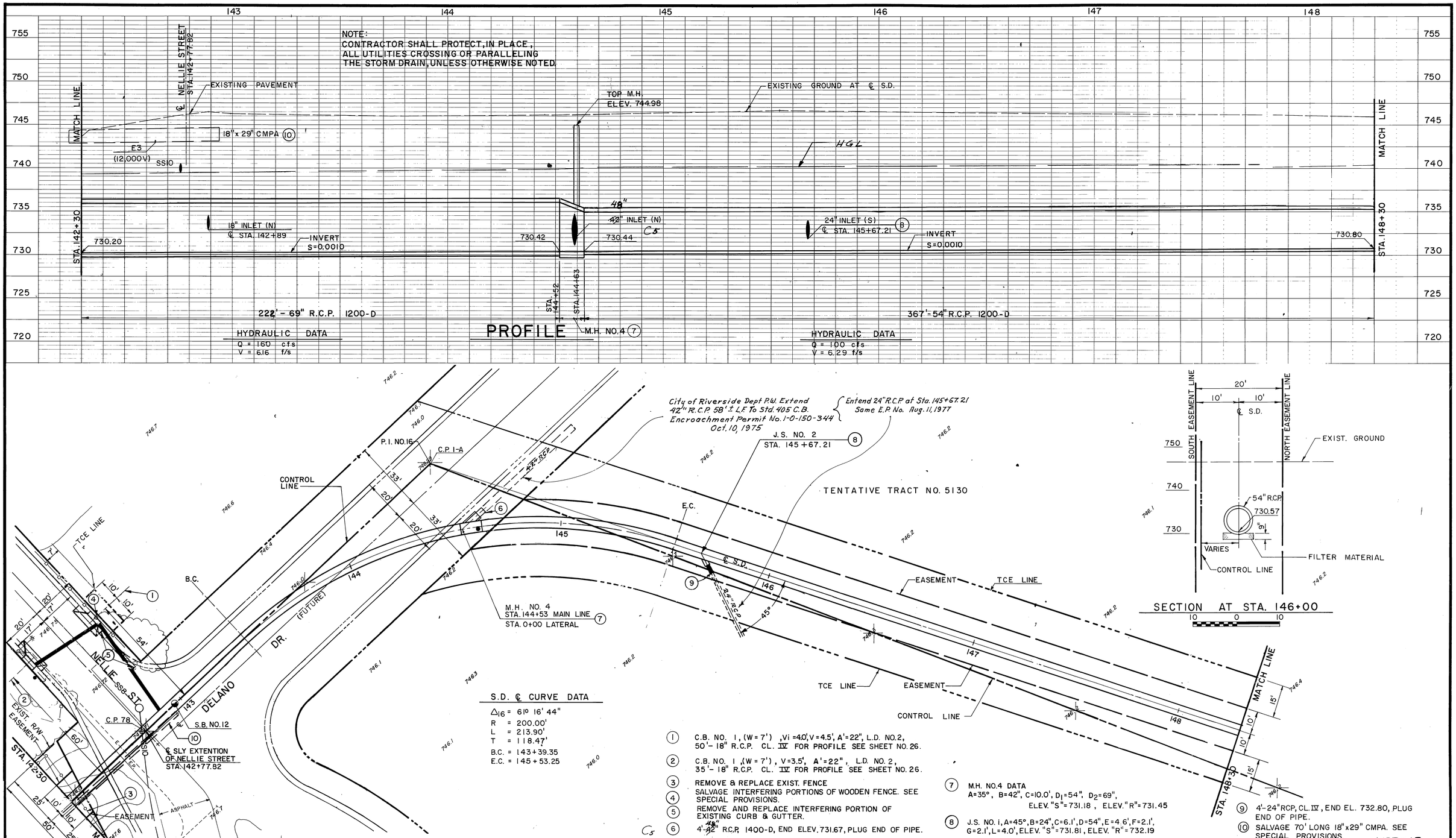

BENCH MARK C.P. 78
1x2 HUB AT INTERSECTION OF CONTROL LINE AND NELLIE STREET.
ELEV. 746.71

SCALE:

DATE:

ALDERMAN SWIFT & LEWIS CONSULTING ENGINEERS

APPROVED BY

DATE April 22, 1974

REGISTERED CIVIL ENGINEER NO. 15543

REVISIONS			
C5	Pipe Changed from 42" to 48"		
REF.	DESCRIPTION	APPR.	DATE

A-S BUILT

RIVERSIDE COUNTY FLOOD CONTROL AND WATER CONSERVATION DISTRICT

DESIGNED BY: K.E.K.
DRAWN BY: A. W. S
DATE DRAWN: OCT. 1973
CHECKED BY: R.D.C., G.L.H.

APPROVED BY: John W. Bryant
CHIEF ENGINEER R.E. NO. 8822
DATE: 2-26-76

ANZA CHANNEL
STAGE II
STA. 142+30 TO STA. 148+30

1970 STORM DRAIN BOND ISSUE PROJECT NO. 18

PROJECT NO. 1-0-150

DRAWING NO. 1-319

SHEET NO. 18 OF 81

INDEX OF

D-353

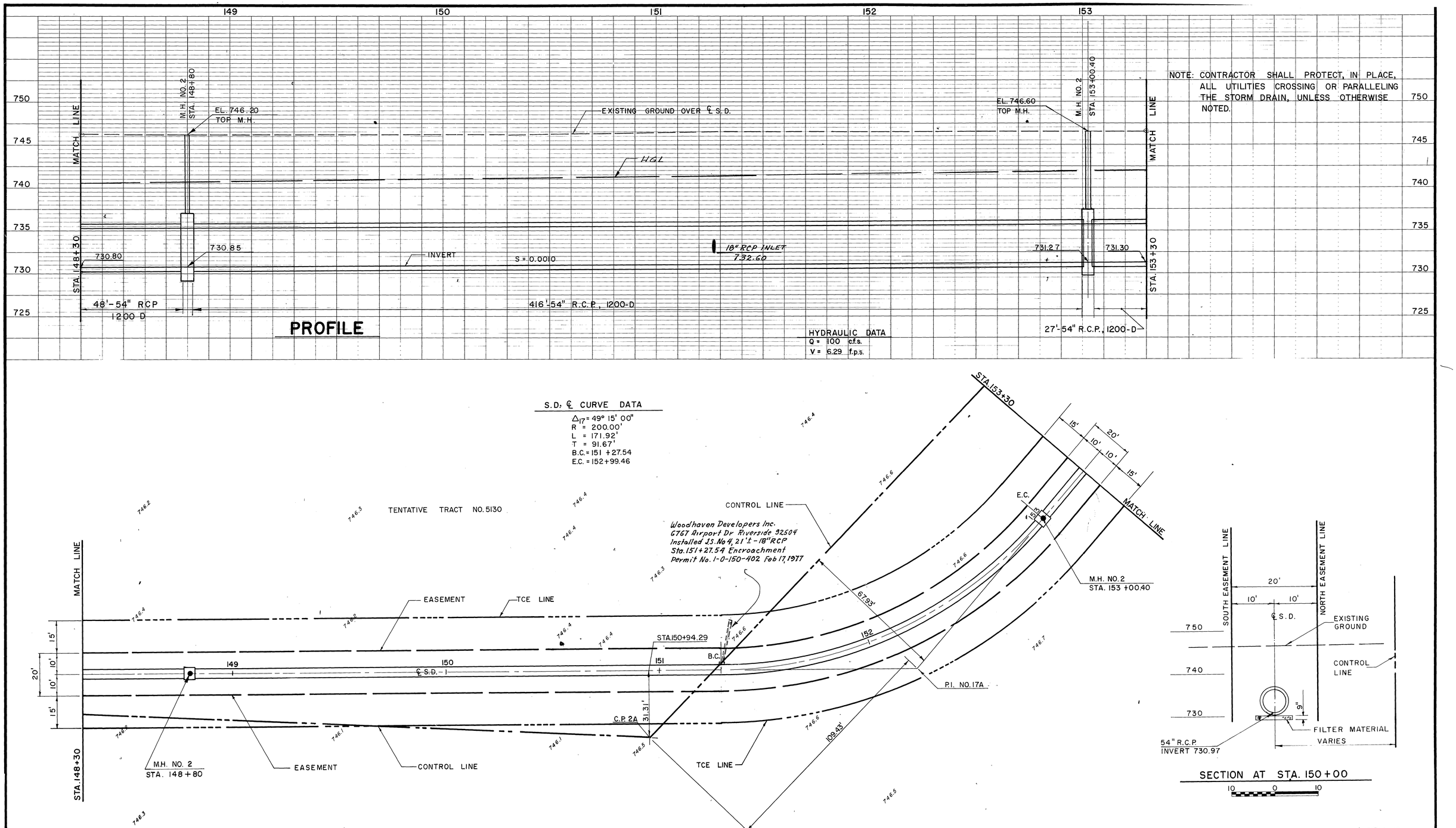

BENCH MARK C.P. 2 A 1"x 2" HUB 660' ± SOUTHEAST OF C.P. IA. ELEV. 746.50 SCALE: DATE:	ALDERMAN SWIFT & LEWIS CONSULTING ENGINEERS APPROVED BY DATE April 24, 1974 REGISTERED CIVIL ENGINEER NO. 11843	REVISIONS No Changes REF. DESCRIPTION APPR. DATE	RIVERSIDE COUNTY FLOOD CONTROL AND WATER CONSERVATION DISTRICT DESIGNED BY: K.E.K. DRAWN BY: E.C.H. DATE DRAWN: OCT. 1973 CHECKED BY: R.D.C., G.L.H. APPROVED BY: CHIEF ENGINEER R.E. NO. 8822 DATE: 2-26-76	ANZA CHANNEL STAGE II STA. 148+30 TO STA. 153+30 1970 STORM DRAIN BOND ISSUE PROJECT NO. 18	INDEX 6E PROJECT NO. 1-0-150 DRAWING NO. 1-319 SHEET NO. 19 OF 81

AS BUILT

D-353

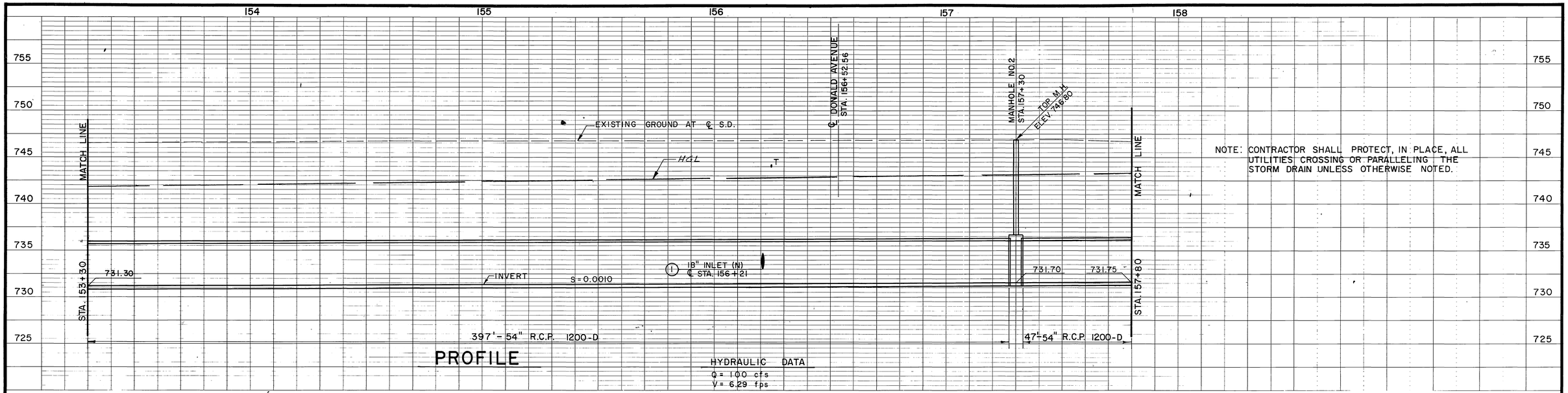

PROFILE

HYDRAULIC DATA
Q = 100 cfs
V = 6.29 fps

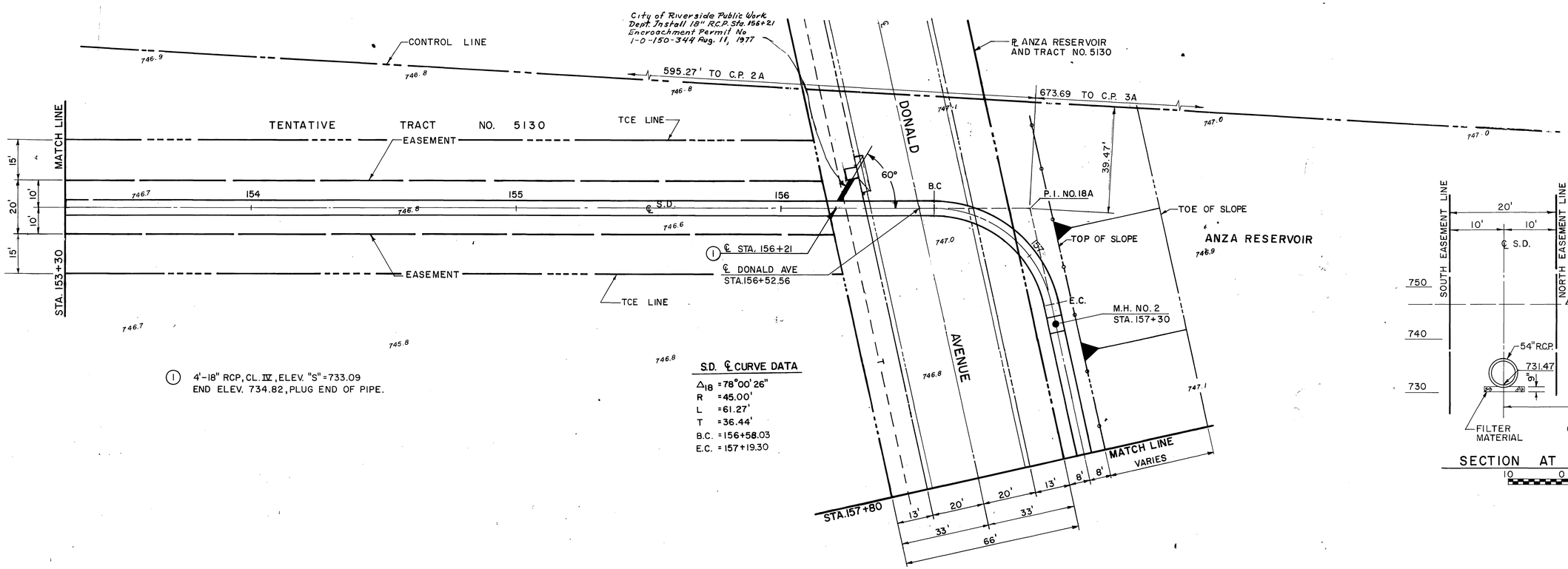

1 4'-18" RCP, CL. IV, ELEV. "S" = 733.09
END ELEV. 734.82, PLUG END OF PIPE.

S.D. ℄ CURVE DATA

Δ_{18} = 78°00' 26"
R = 45.00'
L = 61.27'
T = 36.44'
B.C. = 156+58.03
E.C. = 157+19.30

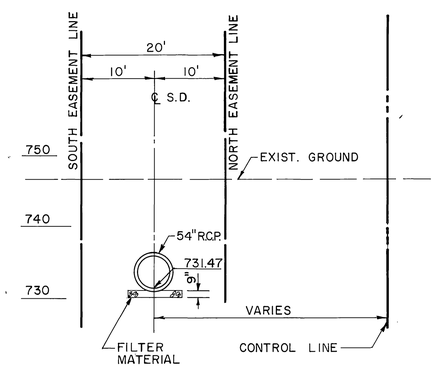

SECTION AT STA. 155+00
10 0 10

PLAN

1" = 20'
20' 0 20'

BENCH MARK C.P. 3A
NAIL & TIN ON ℄ JACKSON ST. 410'± NORTHERLY OF INTERSECTION OF JACKSON ST. & CALIFORNIA AVE. ELEV. 750.25

SCALE:

DATE:

ALDERMAN SWIFT & LEWIS CONSULTING ENGINEERS

APPROVED BY

DATE April 24, 1974

REGISTERED CIVIL ENGINEER NO. 11543

REVISIONS			
	No Changes		
REF.	DESCRIPTION	APPR.	DATE

AS BUILT

RIVERSIDE COUNTY FLOOD CONTROL AND WATER CONSERVATION DISTRICT

DESIGNED BY: K.E.K.
DRAWN BY: A.W.S.
DATE DRAWN: OCT. 1973
CHECKED BY: R.D.C., G.L.H.

APPROVED BY:
CHIEF ENGINEER R.E./NO. 8822
DATE: 2-26-76

ANZA CHANNEL
STAGE II
STA. 153+30 TO STA. 157+80
1970 STORM DRAIN BOND ISSUE PROJECT NO. 18

INDEX 4F

PROJECT NO. 1-0-150
DRAWING NO. 1-319
SHEET NO. 20 OF 81

D-353

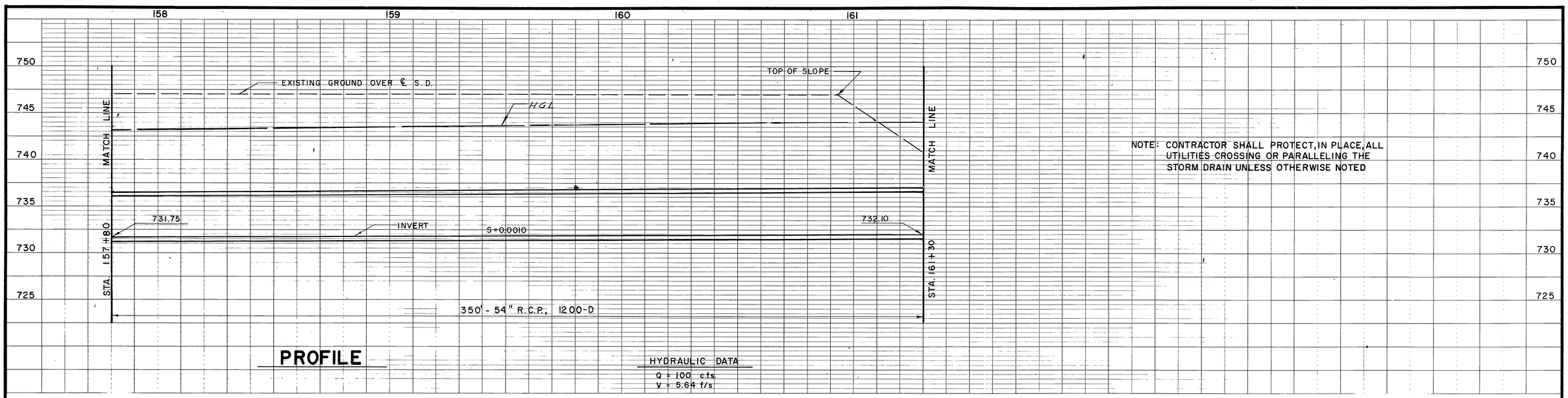

S.D. ℄ CURVE DATA

Δ_{19A} = 45° 00' 00"
R = 45.00'
L = 35.34'
T = 18.64'
B.C. = 160 + 64.13
E.C. = 160 + 99.47

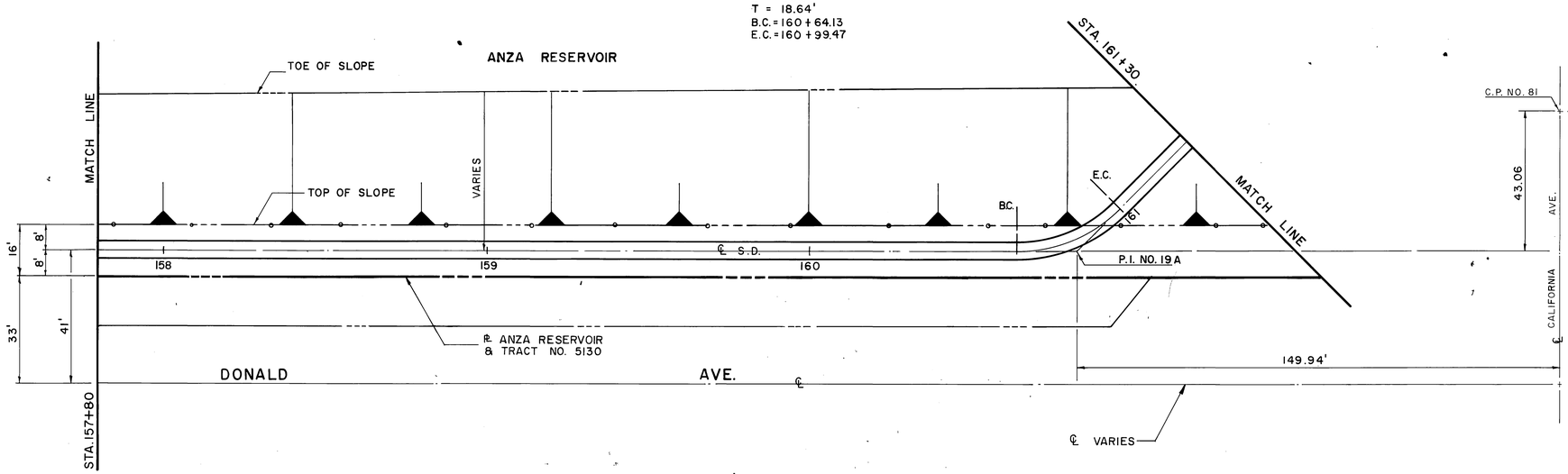

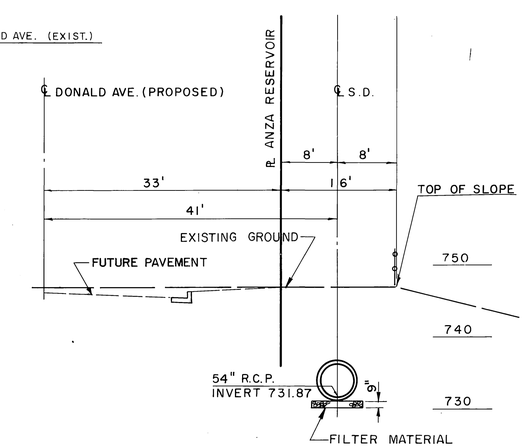

SECTION AT STA. 159+00

10 0 10

PLAN

1" = 20'

20' 0 20'

BENCH MARK C.P. 81 1" I.P. AT INTERSECTION OF CALIFORNIA AVE. AND DONALD AVE. - ELEV. 749.488 SCALE: DATE:	ALDERMAN SWIFT & LEWIS CONSULTING ENGINEERS	APPROVED BY DATE April 22, 1976 REGISTERED CIVIL ENGINEER NO. 11543	REVISIONS No Changes REF. DESCRIPTION APPR. DATE	RIVERSIDE COUNTY FLOOD CONTROL AND WATER CONSERVATION DISTRICT DESIGNED BY: K.E.K. DRAWN BY: R.L.F. DATE DRAWN: OCT. 1973 CHECKED BY: R.D.C., G.L.H.	APPROVED BY: CHIEF ENGINEER R.E. NO. 8822 DATE: 2-26-76

ANZA CHANNEL
STAGE II
STA. 157+80 TO STA. 161+30
1970 STORM DRAIN BOND ISSUE PROJECT NO. 18

PROJECT NO. 1-0-150
DRAWING NO. 1-319
SHEET NO. 21 OF 81

AS BUILT

D-353

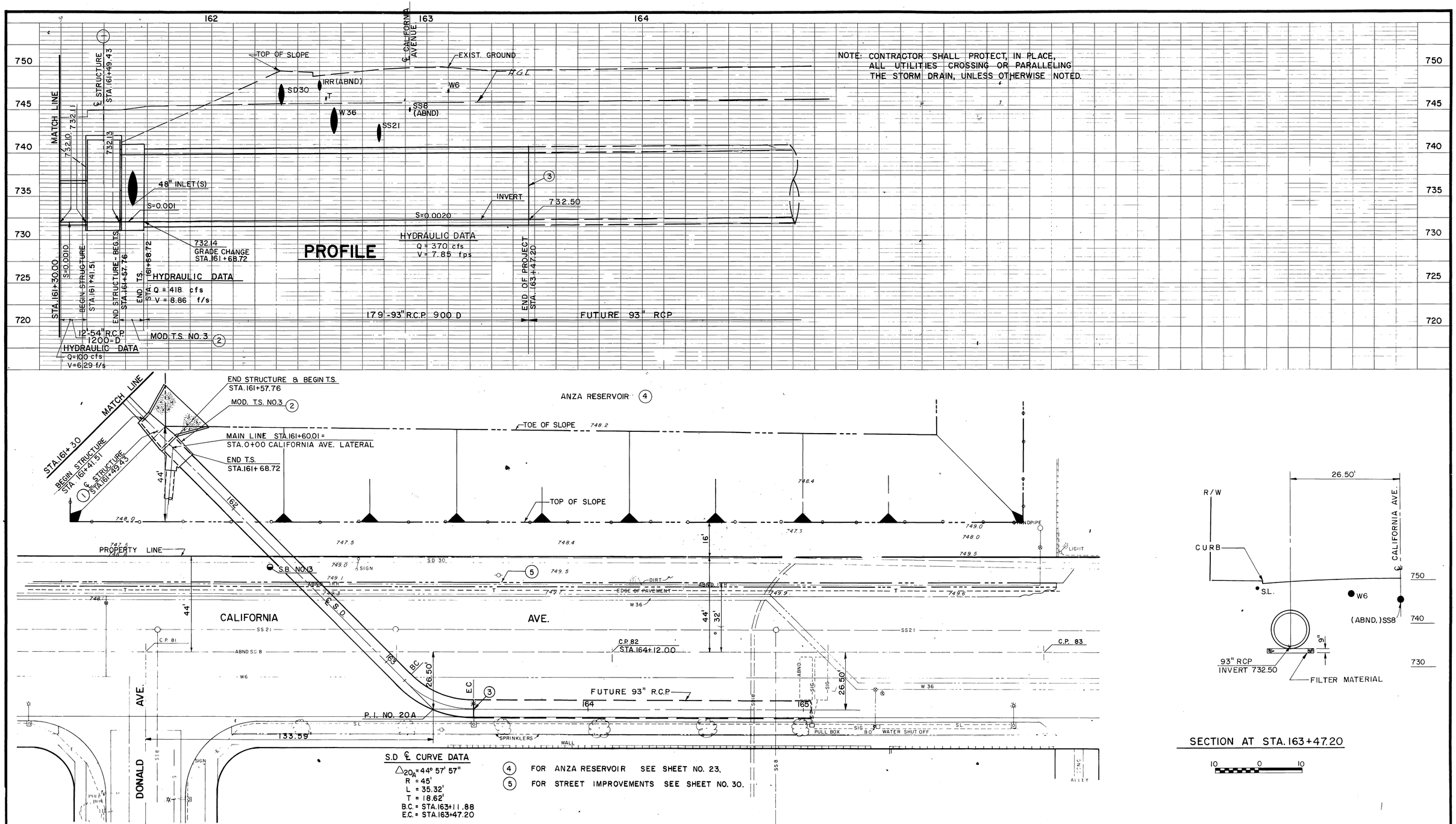

1. FOR DETAIL OF INLET-OULET STRUCTURE SEE SHEET NO. 28.
2. MOD. T.S. NO.3 DATA, A=50°, B=48", C=10.3' ELEV."S"=734.19, ELEV."R"=734.24, CALIFORNIA AVENUE LATERAL, SEE SHEET NO. 24 FOR PLAN & PROFILE.
3. END OF PROJECT, SEAL END WITH CONCRETE BULKHEAD

PLAN

1" = 20'

20' 0 20'

BENCH MARK C.P. 81
1" I.P. AT INTERSECTION OF DONALD AVE. & CALIFORNIA
ELEV. 749.488

SCALE:

DATE:

ALDERMAN SWIFT & LEWIS CONSULTING ENGINEERS

APPROVED BY

DATE April 24, 1970

REGISTERED CIVIL ENGINEER NO. 16643

REVISIONS			
REF.	DESCRIPTION	APPR.	DATE
	No Changes		

RIVERSIDE COUNTY FLOOD CONTROL AND WATER CONSERVATION DISTRICT

DESIGNED BY: K.E.K.
DRAWN BY: E.C.H.
DATE DRAWN: OCT. 1973
CHECKED BY: R.D.C., G.L.H.

APPROVED BY:
CHIEF ENGINEER-R.E. NO. 8822
DATE: 2-26-76

ANZA CHANNEL
STAGE II
STA.161+30 TO STA.163+47.20
1970 STORM DRAIN BOND ISSUE PROJECT NO. 18

INDEX 5

PROJECT NO 1-0-150
DRAWING NO 1-319
SHEET NO 22 OF 81

AS BUILT

D-353

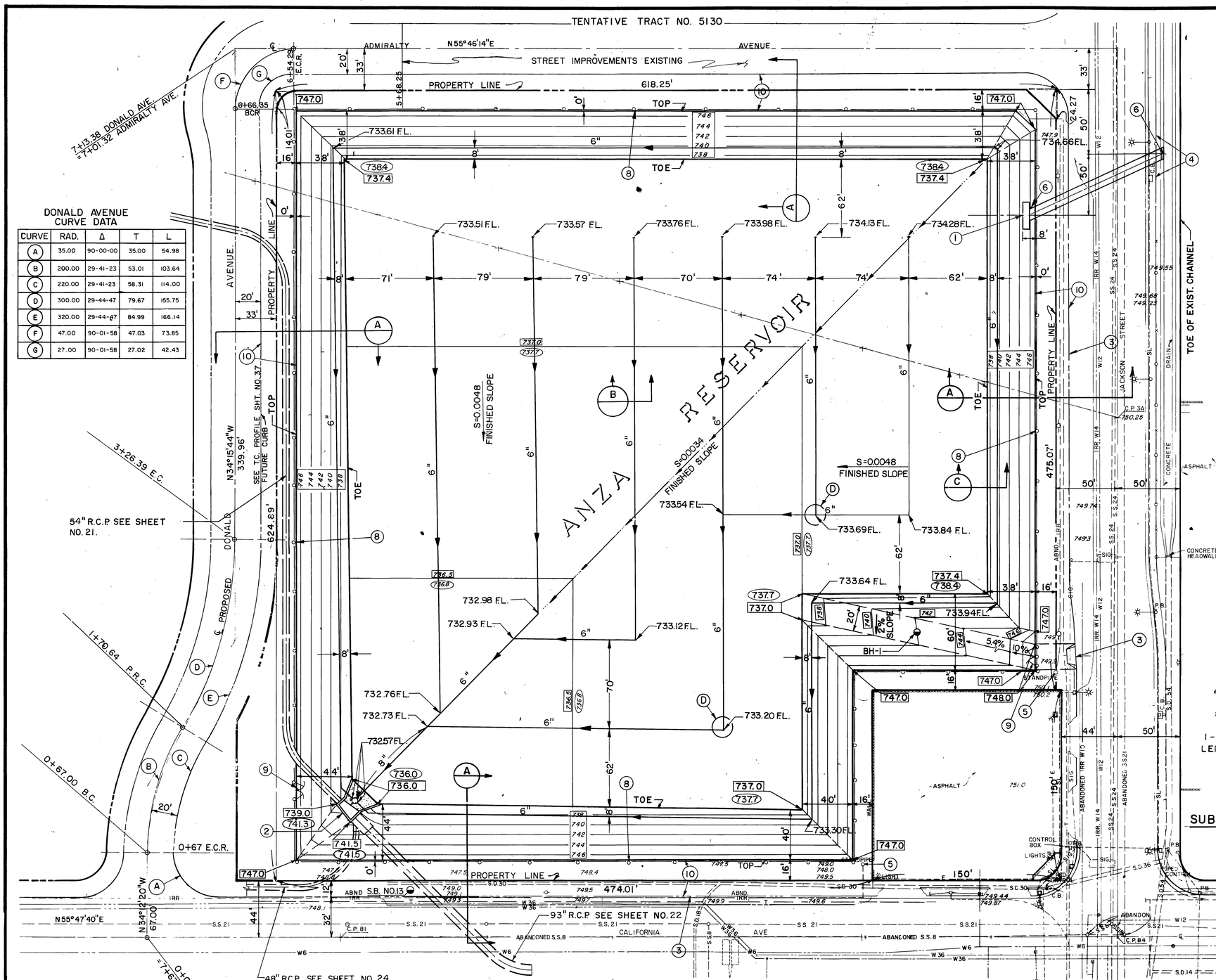

DONALD AVENUE CURVE DATA

CURVE	RAD.	Δ	T	L
A	35.00	90-00-00	35.00	54.98
B	200.00	29-41-23	53.01	103.64
C	220.00	29-41-23	58.31	114.00
D	300.00	29-44-47	79.67	155.75
E	320.00	29-44-47	84.99	166.14
F	47.00	90-01-58	47.03	73.85
G	27.00	90-01-58	27.02	42.43

1. MOD. C.B. NO.1, W=21', V=2.38', C.B. OPENING = 12", 117 L.F 7' WIDE x 2' HIGH R.C.B. SEE PROFILE ON SHEET NO. 24. NO L.D.
2. INLET OUTLET STRUCTURE SEE DETAIL ON SHEET NO. 28
3. FOR STREET IMPROVEMENTS SEE PLANS ON SHEETS 30 & 31.
4. REMOVE & REPLACE INTERFERING PORTIONS OF EXISTING CHAIN LINK FENCE
5. REMOVE STANDPIPE 1'-0" MIN. BELOW FINISHED GRADE AND PLUG ABANDONED IRR. PIPE
6. SEE STRUCTURAL DETAIL ON SHEET NO. 29.
7. FOR LANDSCAPING & IRRIGATION SYSTEM SEE SHEETS 33 & 34.
8. 6' HIGH CHAIN LINK FENCE, SEE SPECIAL PROVISIONS.
9. 14' DOUBLE DRIVE GATE, EXISTING.
10. GRADE 2% SLOPE UP FROM EXISTING OR FUTURE T.C. TO PROPERTY LINE. GRADE VARIABLE SLOPE FROM PROPERTY LINE TO 747 CONTOUR 16' INSIDE OF PROPERTY LINE.

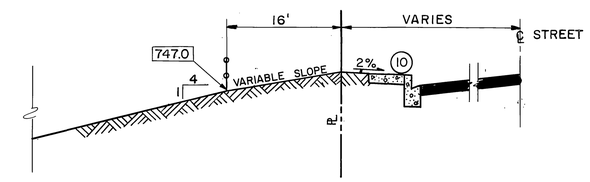

TYPICAL SECTION (A)
NO SCALE

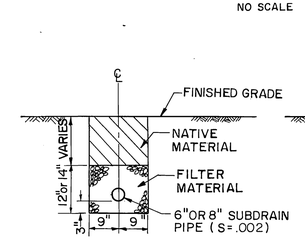

SUBDRAIN TYPICAL (B) SECTION
(NO SCALE)

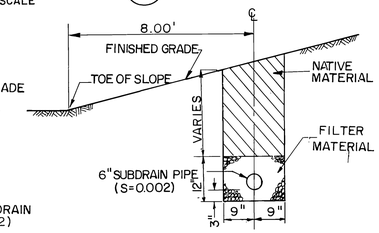

SUBDRAIN TYPICAL (C) SECTION
(NO SCALE)

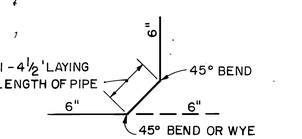

SUBDRAIN CORNER SCHEMATIC (D) (TYPICAL)
(NO SCALE)

LEGEND

- (100.0) FINISHED ELEVATION
- [100.0] EXISTING ELEVATION
- [100] EXISTING CONTOUR
- FLOW LINE
- GRADE BREAK LINE
- (100) FINISHED CONTOUR
- 100.00 F.L. SUBDRAIN PIPE FLOW LINE ELEVATION
- SUBDRAIN PIPE

EXHIBIT B

CITY OF RIVERSIDE, CALIFORNIA
PARK AND RECREATION DEPARTMENT

APPROVED BY
Effie M. Brown — 2/25/76
PARK AND RECREATION DIRECTOR — DATE

INDEX 5

PLAN

1"=40'

BENCH MARK C.P. 84 ELEV. 750.415
11/4" I.P. DOWN 0.63' IN CITY WELL MONUMENT AT THE INTERSECT. OF CALIF. AVE. & JACKSON ST.

SCALE:

DATE:

ALDERMAN SWIFT & LEWIS CONSULTING ENGINEERS

APPROVED BY
DATE April 24, 1974
REGISTERED CIVIL ENGINEER NO. 11543

REVISIONS

REF.	DESCRIPTION	APPR.	DATE
	No Changes		

RIVERSIDE COUNTY FLOOD CONTROL AND WATER CONSERVATION DISTRICT

DESIGNED BY: K. K.
DRAWN BY: J.A.C.
DATE DRAWN: OCT. 1973
CHECKED BY: W.D.C.-R.D.C.

APPROVED BY: John W. Bryant
CHIEF ENGINEER R.E. NO. 8822
DATE 2-25-76

ANZA CHANNEL
STAGE II
ANZA RESERVOIR
1970 STORM DRAIN BOND ISSUE PROJECT NO. 18

PROJECT NO 1-0-150
DRAWING NO. 1-319
SHEET NO 23 OF 81

AS BUILT

D-353

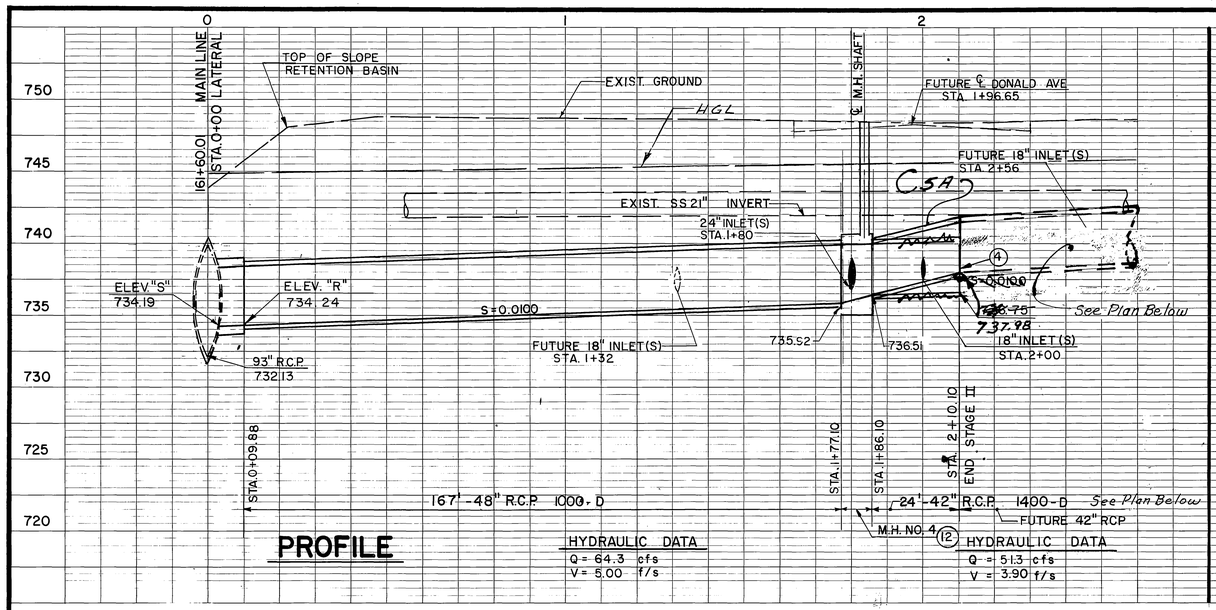

PROFILE

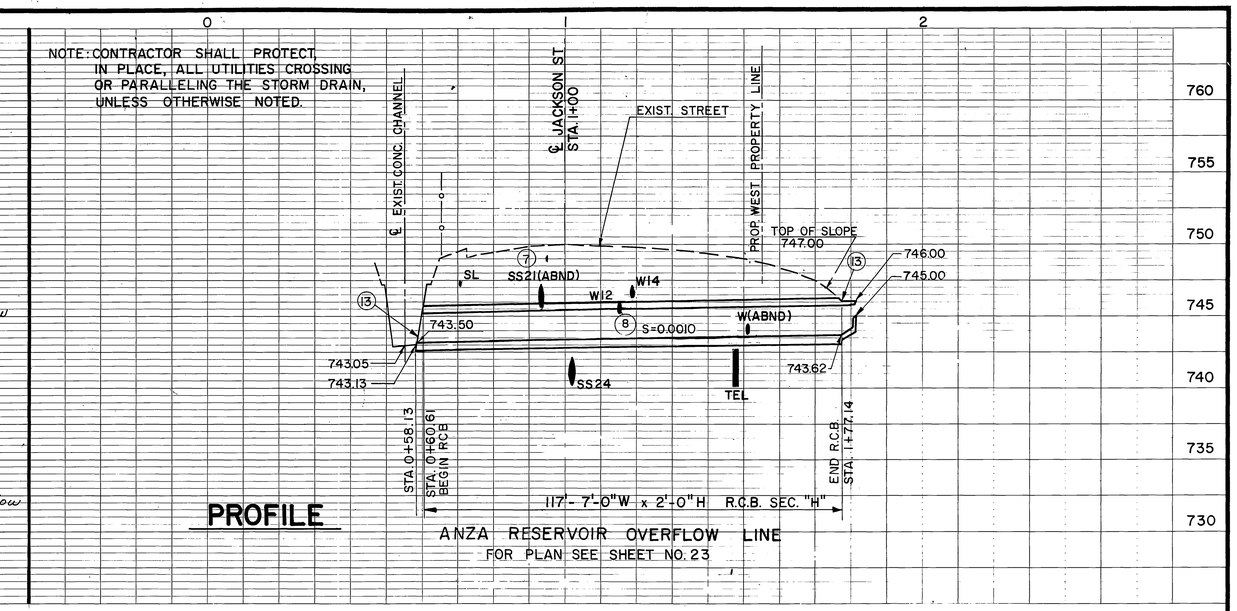

PROFILE

ANZA RESERVOIR OVERFLOW LINE
FOR PLAN SEE SHEET NO. 23

S.D. ℄ CURVE DATA

△ = 85° 02' 03"
R = 45.00'
L = 66.79'
T = 41.25'
B.C. = STA. 0+12.93
E.C. = STA. 0+79.72

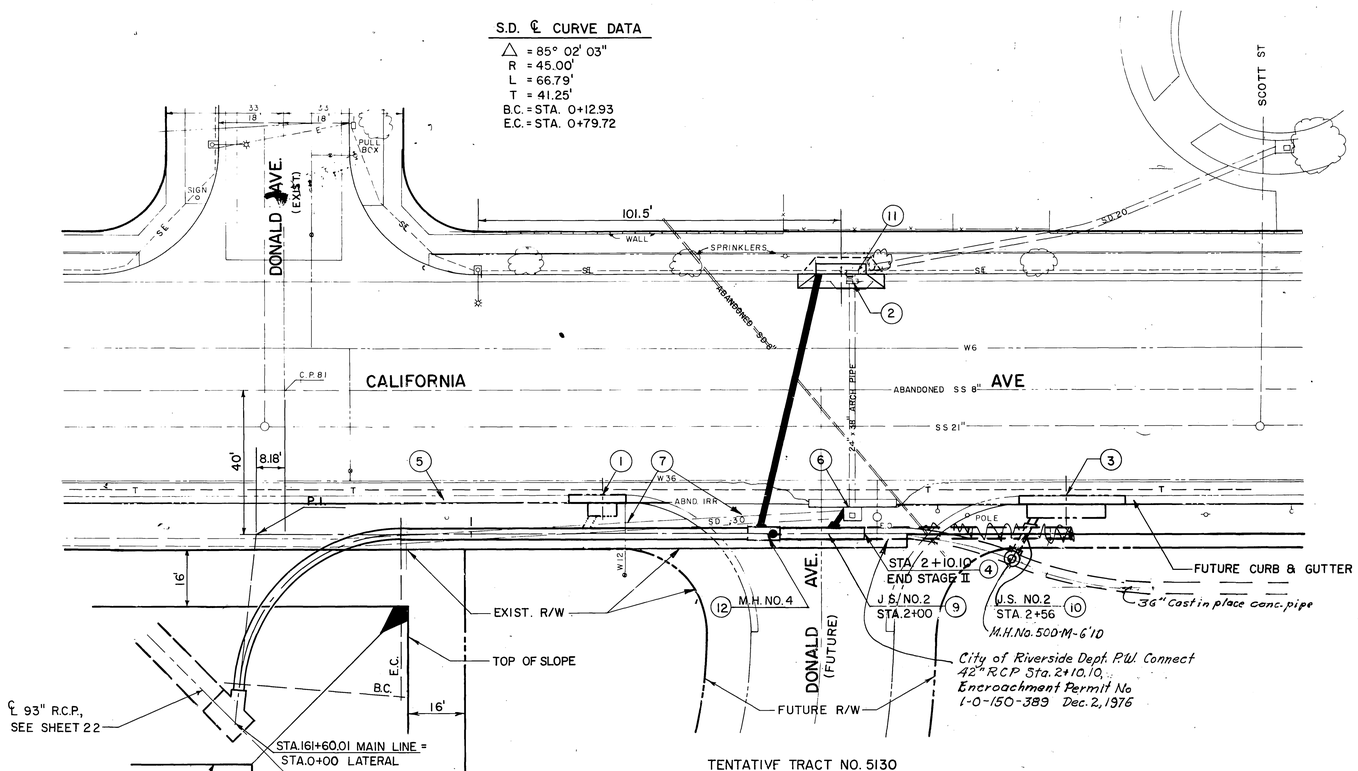

PLAN

1" = 20'

20' 0 20'

1. FUTURE C.B. NO.1, W=7', V=4.0', L.D. NO.2, 8'-18" R.C.P. CL. IV, SEE PROFILE SHEET NO. 27.
2. REMOVE EXIST. C.B. & L.D., PLUG EXIST. 24"x38" ARCH PIPE. CONSTRUCT C.B. NO. 1, W=14' V=5.0', L.D. NO. 2, CASE "C", 74'-24" R.C.P., CL. IV. CONNECT EXIST. 20" S.D. INTO SIDE OF C.B. SEE PROFILE SHEET NO. 26.
3. FUTURE C.B. NO.1, W=21', V=4.0', L.D. NO.2, 6'-18" R.C.P., CL. IV, SEE PROFILE SHEET NO. 27.
4. PLUG END OF PIPE
5. STREET IMPROVEMENTS, SEE SHEET NO. 30.
6. EXIST. C.B. V=3.27' PLUG EXIST. INLET PIPE & REMOVE INTERFERING PORTION OF 30" S.D. EXIST. L.D. CONSTRUCT 8'-18" R.C.P., CL. IV, CONNECT INTO EXIST. OUTLET. SEE PROFILE SHEET NO. 27.
7. REMOVE INTERFERING PORTIONS AND PLUG.
8. TO BE CUT & PLUGGED AND RELOCATED BY OTHERS. SEE SPECIAL PROVISIONS.
9. J.S. NO. 2, STA. 1+97, A=50°, B=18", C=4.7', D=42", E=3.2', F=1.8', G=1.6', L=3.8'
10. FUTURE J.S. NO.2
11. RELOCATE SL AROUND CATCH BASIN.
12. M.H. NO.4 DATA: A=73°, B=27", C=3.2', D_1=42", D_2=48" ELEV. "S" 737.04 ELEV. "R" 737.10
13. SEE STRUCTURAL DETAIL SHEET NO. 29.

BENCH MARK C.P 81
1" I.P. AT ℄ INTERSECTION OF CALIFORNIA AVE. & DONALD AVE. ELEV. 749.488

SCALE:

DATE:

ALDERMAN SWIFT & LEWIS CONSULTING ENGINEERS

APPROVED BY

DATE April 26, 1974

REGISTERED CIVIL ENGINEER NO. 16843

REVISIONS			
REF.	DESCRIPTION	APPR.	DATE
CSA	Shade Change		

AS BUILT

RIVERSIDE COUNTY FLOOD CONTROL AND WATER CONSERVATION DISTRICT

DESIGNED BY: T.V.P.
DRAWN BY: E.C.H.
DATE DRAWN: OCT. 1973
CHECKED BY: R.D.C. & G.L.H.

APPROVED BY:
CHIEF ENGINEER R.E. NO. 8822
DATE: 2-26-76

ANZA CHANNEL
STAGE II
CALIFORNIA AVE. LATERAL
STA. 0+00 TO STA. 2+63
1970 STORM DRAIN BOND ISSUE PROJECT NO. 18

INDEX UF

PROJECT NO. 1-0-150
DRAWING NO. 1-319
SHEET NO. 24 OF 81

D-353

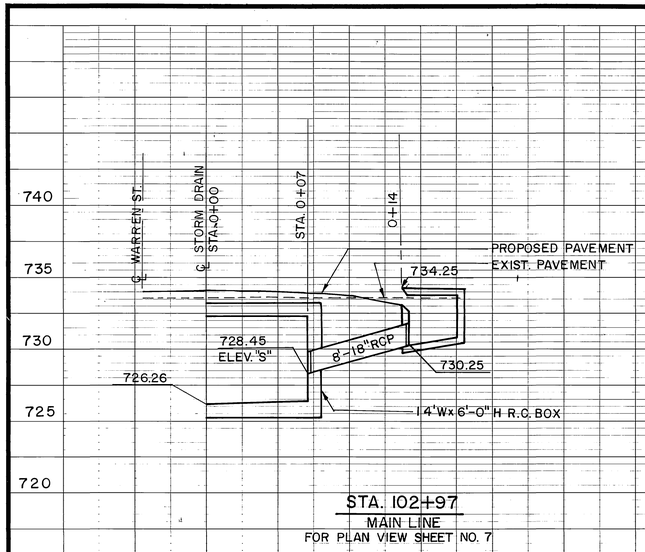

STA. 102+97
MAIN LINE
FOR PLAN VIEW SHEET NO. 7

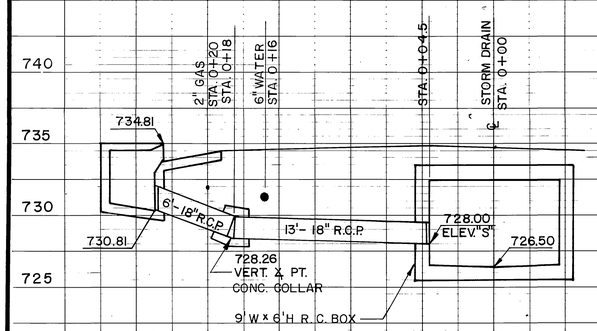

STA. 105+24(W)
MAIN LINE
FOR PLAN VIEW SHEET NO. 7

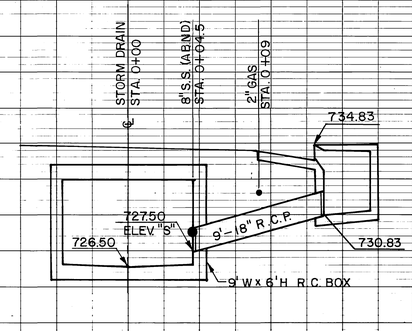

STA. 105+24(E)
MAIN LINE
FOR PLAN VIEW SHEET NO. 7

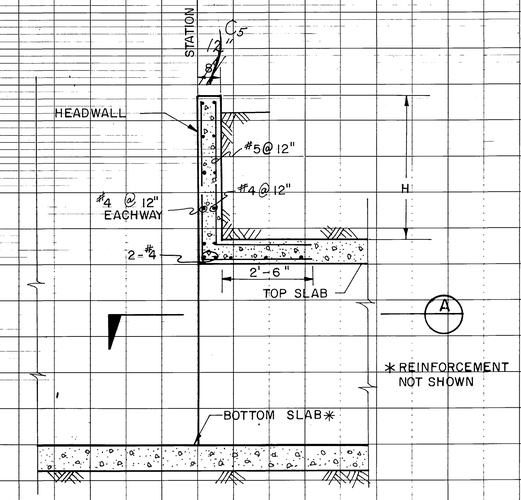

NOTE: 1. STRUCTURAL CONCRETE SHALL BE CLASS "A"
2. HEADWALL SHALL EXTEND TO OUTSIDE FACE OF RECTANGULAR CHANNEL TRANSITION WALLS.

TYPICAL HEADWALL DETAIL

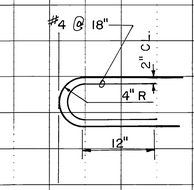

PIER END DETAIL (A)
FOR DOUBLE BARREL BOXES
NO SCALE

INDEX UP

BENCH MARK	REVISIONS			RIVERSIDE COUNTY FLOOD CONTROL AND WATER CONSERVATION DISTRICT		ANZA CHANNEL STAGE II MISCELLANEOUS DETAILS & CONNECTOR PIPE PROFILES 1970 STORM DRAIN BOND ISSUE PROJECT NO. 18	PROJECT NO. 1-0-150
				DESIGNED BY: A.G.K.	APPROVED BY: Robert E. Bryant CHIEF ENGINEER R.E. NO. 8822		DRAWING NO. 1-319
SCALE:				DRAWN BY: S. Moody			SHEET NO. 25 OF 81
DATE:	C6 Headwall "changed T= 12"	WCG	16 DEC 77	DATE DRAWN: 5-12-75			
	REF. DESCRIPTION	APPR.	DATE	CHECKED BY:	DATE: 2-26-76		

AS BUILT

D-353

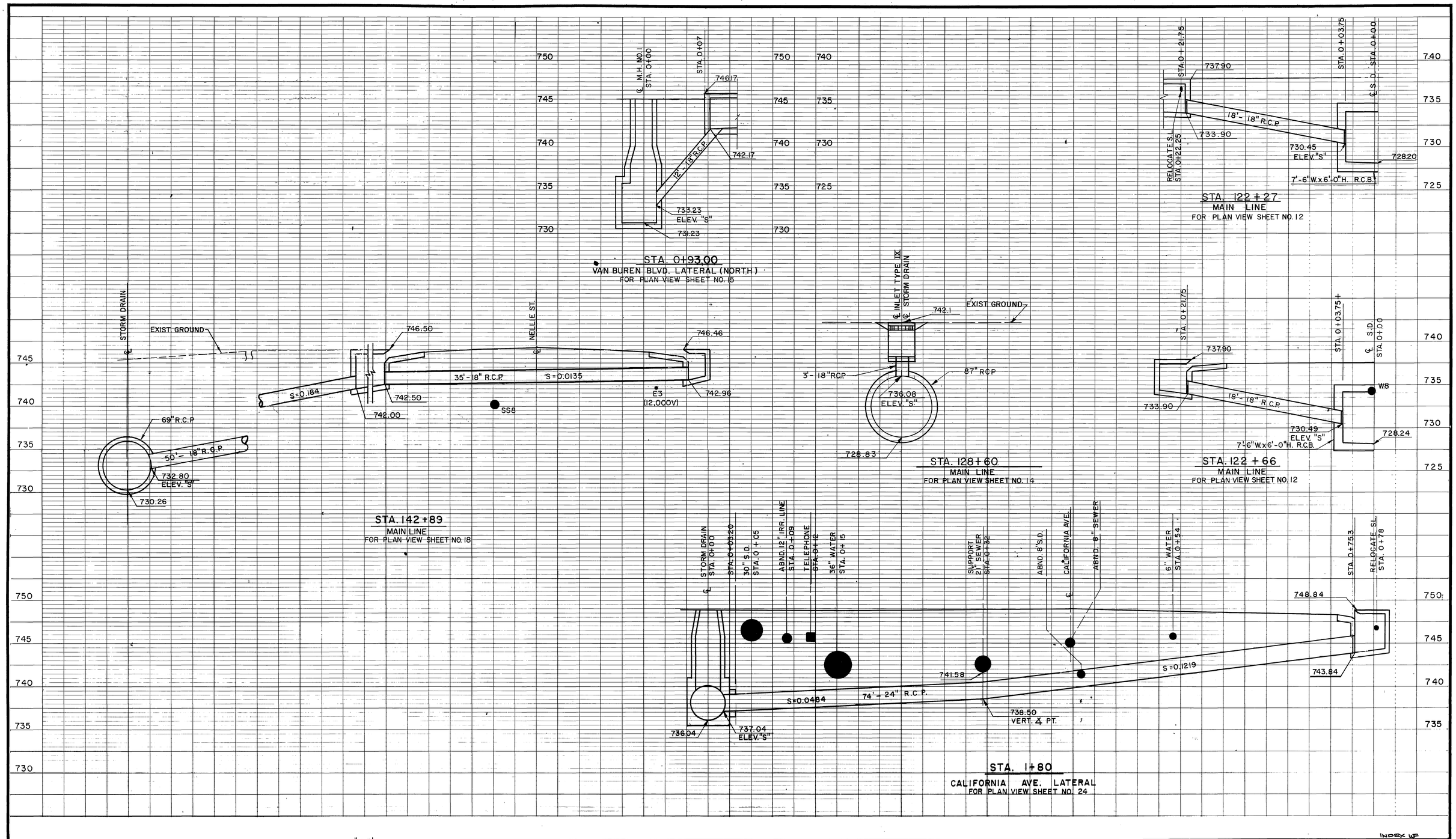

1" = 5'
0 5' 10'

BENCH MARK	APPROVED BY	REVISIONS	RIVERSIDE COUNTY FLOOD CONTROL AND WATER CONSERVATION DISTRICT	ANZA CHANNEL STAGE II	PROJECT NO. 1-0-150
SCALE:	DATE April 24, 1976	No Changes	DESIGNED BY: K. K. / DRAWN BY: A.W.S. / DATE DRAWN: OCT. 1973 / CHECKED BY: R.D.C.	CONNECTOR PIPE PROFILE	DRAWING NO. 1-319
DATE:	ALDERMAN SWIFT & LEWIS CONSULTING ENGINEERS — REGISTERED CIVIL ENGINEER NO. 11843	REF. / DESCRIPTION / APPR. / DATE	APPROVED BY: CHIEF ENGINEER R.E. NO. 8822 — DATE: 2-26-76	1970 STORM DRAIN BOND ISSUE PROJECT NO. 18	SHEET NO. 26 OF 81

AS BUILT

INDEX 45

D-353

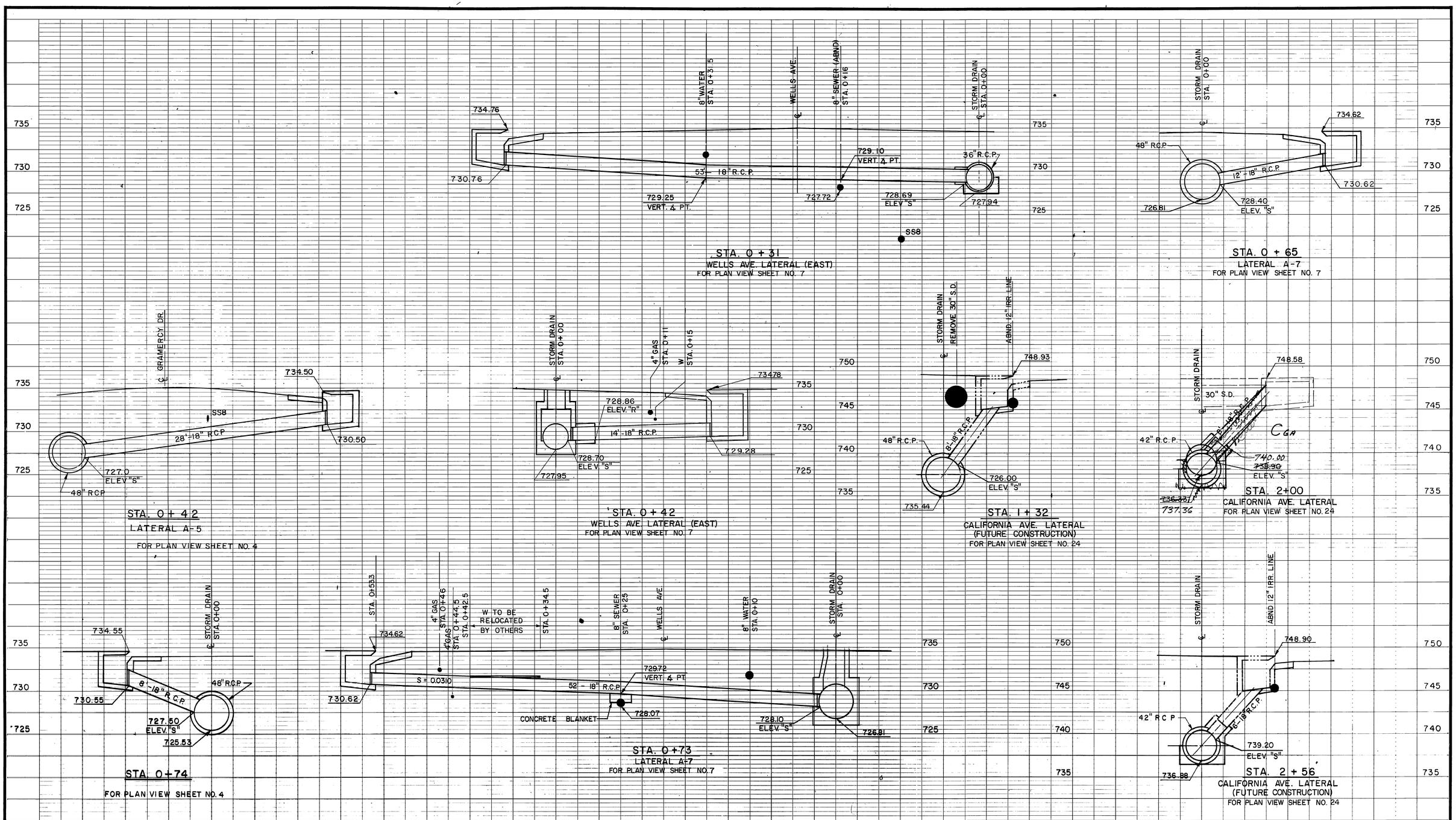

1" = 5'
0 5' 10'

BENCH MARK	ALDERMAN SWIFT & LEWIS CONSULTING ENGINEERS	APPROVED BY	REVISIONS	RIVERSIDE COUNTY FLOOD CONTROL AND WATER CONSERVATION DISTRICT	ANZA CHANNEL STAGE II
SCALE:		DATE April 24, 1974		DESIGNED BY: K. K.	CONNECTOR PIPE PROFILE
DATE:		REGISTERED CIVIL ENGINEER NO. 11543	CGA Elev. Change	DRAWN BY: A. W. S.	1970 STORM DRAIN BOND ISSUE PROJECT NO. 18
			REF. DESCRIPTION APPR. DATE	DATE DRAWN: OCT. 1973	PROJECT NO. 1-0-150
				CHECKED BY: R. D. C.	DRAWING NO. 1-319
				APPROVED BY: John W. Bryant CHIEF ENGINEER R.E. NO. 8822 DATE: 2-26-76	SHEET NO. 27 OF 81

INDEX 4F

AS BUILT

D-353

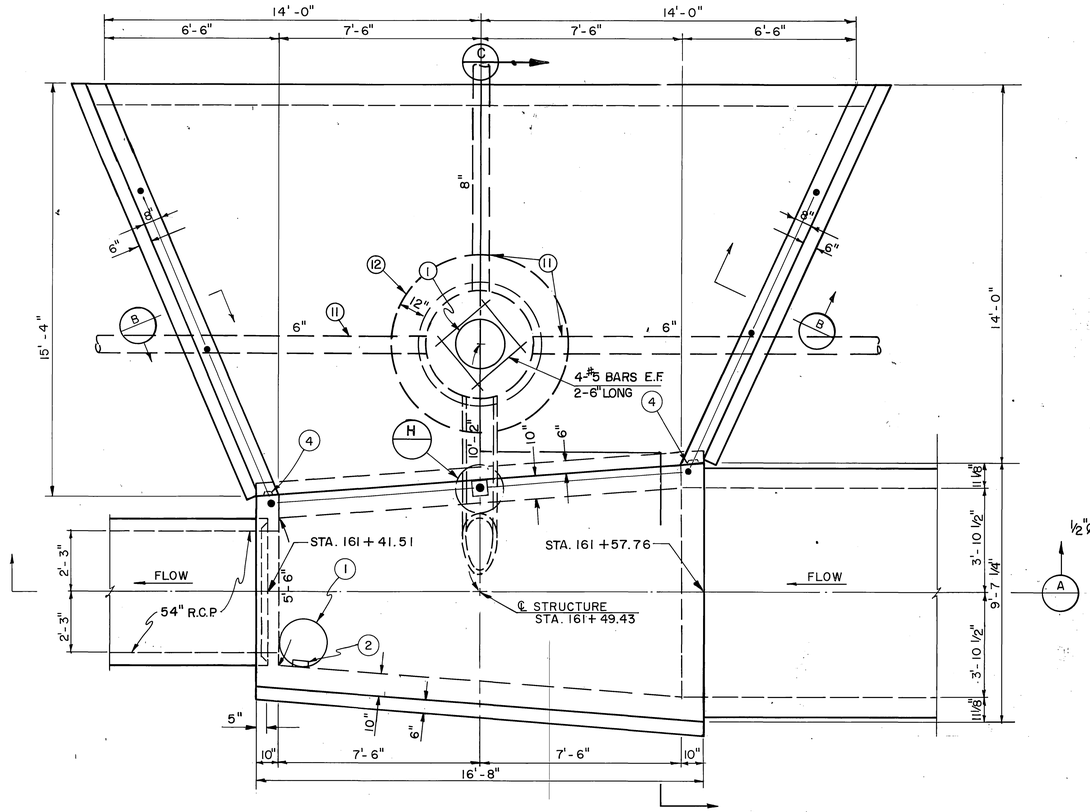

PLAN ANZA RESERVOIR INLET-OUTLET STRUCTURE

SCALE: 3/8" = 1'-0"

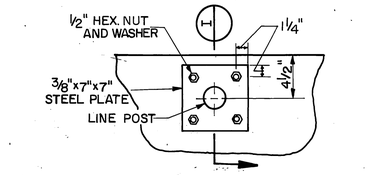

POST ANCHOR DETAIL (H)

NO SCALE

NOTE: CIRCLED POST ONLY

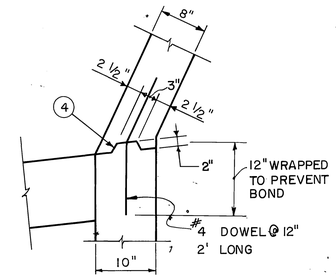

EXPANSION JOINT DETAIL

SCALE: 1" = 1'-0"

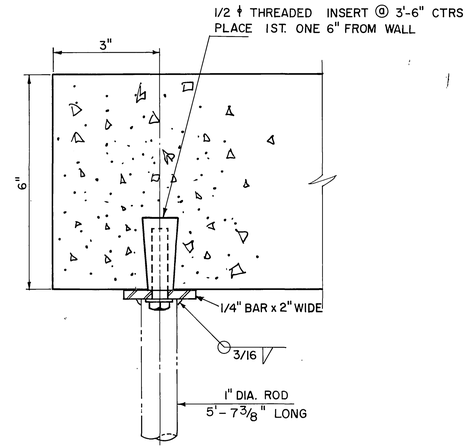

DETAIL (D)

SCALE: 1/2" = 1"

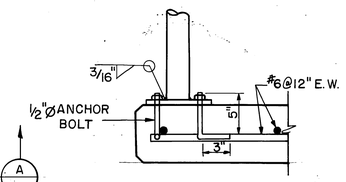

SECTION (I)

NO SCALE

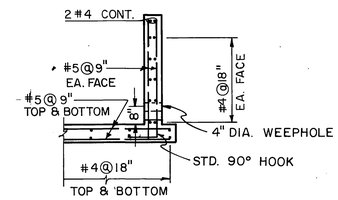

SECTION (B)

SCALE: 3/8" = 1'-0"

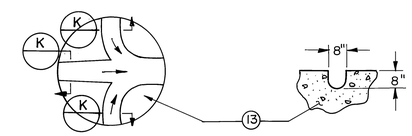

SECTION (J)

NO SCALE

SECTION (K)

NO SCALE

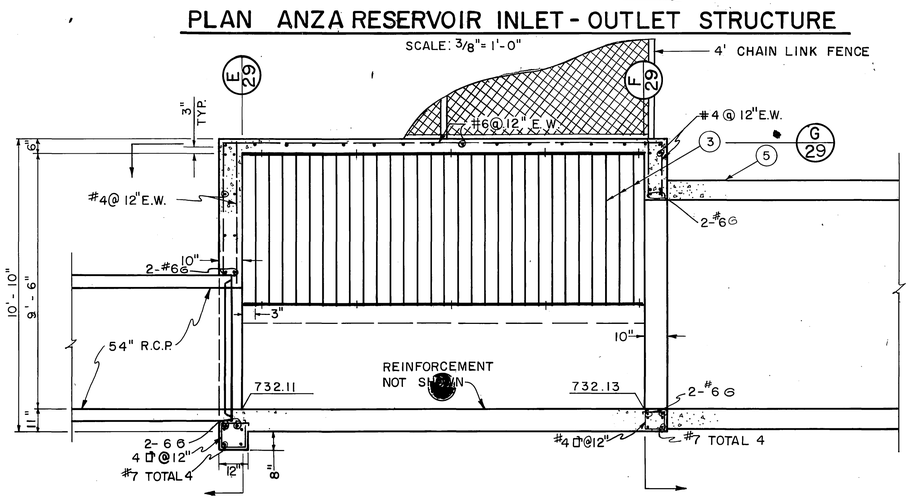

SECTION (A)

SCALE: 3/8" = 1'-0"

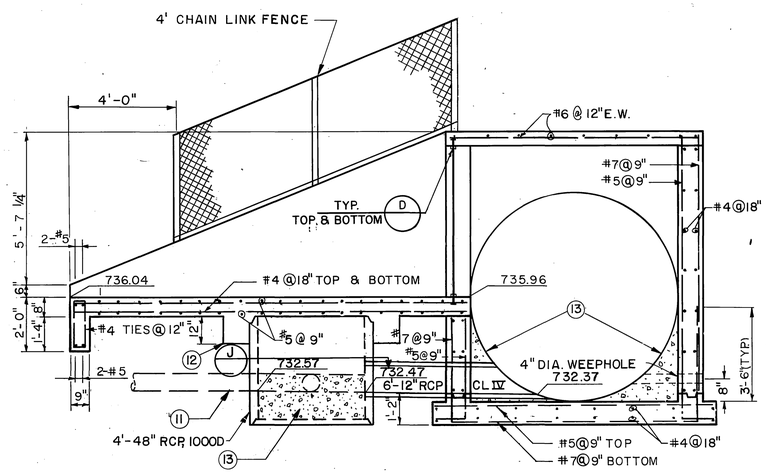

SECTION (C)

SCALE: 3/8" = 1'-0"

SCALE: 1/2" = 1"

SCALE: 3/8" = 1'-0"

SCALE: 1" = 1'-0"

NOTES

1. MANHOLE FRAME & COVER PER STD. DWG. NO. C.B. 103
2. MANHOLE STEPS PER STD. DWG. NO. M.H. 259
3. 1" DIA. RODS @ 6" CTRS. WITH 1/4" x 2" BARS WELDED TOP AND BOTTOM.
4. 3/4" PREMOLDED EXPANSION JOINT FILLER. LONGITUDINAL STEEL WILL NOT BE CONTINUOUS THROUGH THE JOINT.
5. MODIFIED T.S. NO. 3. SEE SHEET NO. 22 FOR T.S. DATA.
6. FOR OVERALL PLAN VIEW SEE SHEET NO. 22 & 23.
7. STRUCTURAL CONCRETE SHALL BE CLASS A.
8. CLEAR COVER FOR STEEL SHALL BE 1 1/2" EACH FACE FOR WALLS, 2 1/4" EACH FACE FOR TOP SLAB AND 2" EACH FACE FOR BOTTOM SLAB.
9. WEEPHOLES SHALL BE FORMED AS SHOWN AT A SPACING OF 5 FEET WITH ONE CUBIC FOOT OF FILTER MATERIAL PLACED AT EACH HOLE. (SOUTH WALL ONLY).
10. IN ACCORDANCE WITH SECTIONS 7.6 AND 12.5 OF A.C.I. STANDARD 318-71, SPLICES SHALL BE CLASS C, 1.7 TIMES THE BASIC DEVELOPMENT LENGTH. SPLICES FOR HORIZONTAL REINFORCEMENT IN WALLS SHALL BE INCREASED AN ADDITIONAL 40%. ALL SPLICES ARE SUBJECT TO APPROVAL BY THE ENGINEER.
11. SUBDRAIN PIPE. SEE SHEET NO. 23 AND SPECIFICATIONS.
12. CONCRETE COLLAR POURED MONOLITHICALLY WITH APRON.
13. SHAPE BOTTOM WITH CLASS "B" CONCRETE.

INDEX 45

BENCH MARK	ALDERMAN SWIFT & LEWIS CONSULTING ENGINEERS	APPROVED BY	REVISIONS
SCALE:		DATE April 24, 1974	No Changes
DATE:		REGISTERED CIVIL ENGINEER NO. 11843	REF. DESCRIPTION APPR. DATE

AS BUILT

RIVERSIDE COUNTY FLOOD CONTROL AND WATER CONSERVATION DISTRICT

DESIGNED BY: T.V.P.
DRAWN BY: R.D.F.
DATE DRAWN: APR. 1974
CHECKED BY: G.L.H.
APPROVED BY: John W. Bryant, CHIEF ENGINEER R.E. NO. 8822
DATE: 2-26-76

ANZA CHANNEL
STAGE II
ANZA RESERVOIR
INLET-OUTLET STRUCTURE
1970 STORM DRAIN BOND ISSUE PROJECT NO. 18

PROJECT NO. 1-0-150
DRAWING NO. 1-319
SHEET NO. 28 OF 81

D-353

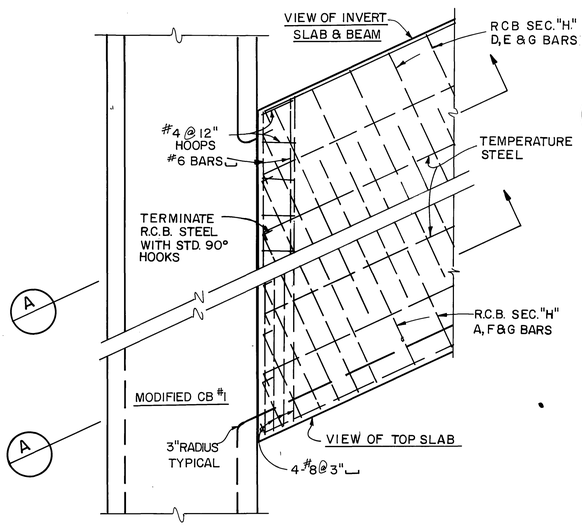

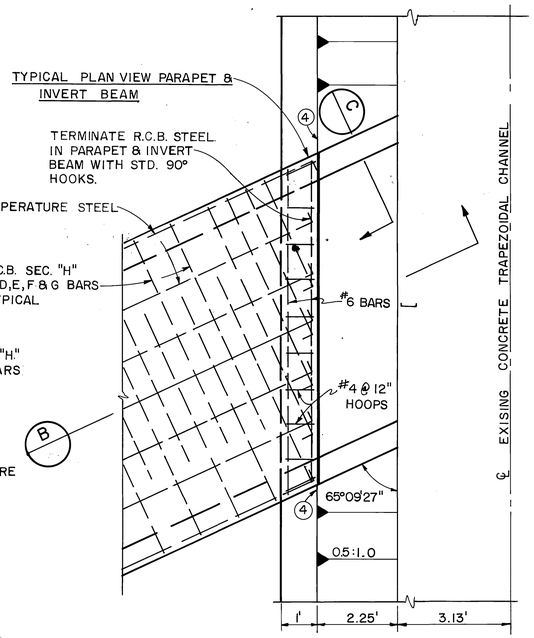

ANZA RESERVOIR

OVERFLOW LINE

1/2" = 1'-0"

FOR OVERALL PLAN VIEW SEE SHEET NO. 23

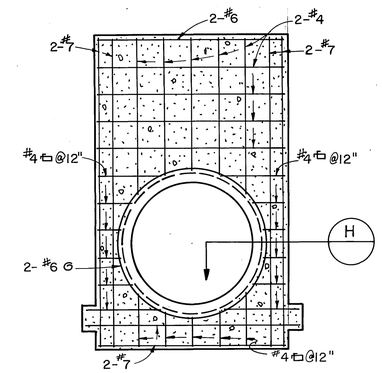

SECTION E / 28

3/8" = 1'-0"

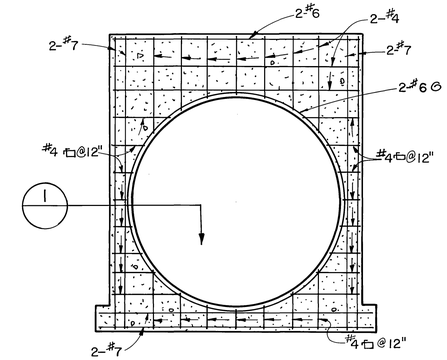

SECTION F / 28

3/8" = 1'-0"

NOTES:

1. STRUCTURAL CONCRETE SHALL BE CLASS "A".
2. CLEAR COVER FOR STEEL SHALL BE 1 1/2 INCHES FOR TOP SLAB, WALL AND PARAPET BEAM, AND 2 INCHES FOR INVERT SLAB & BEAM, UNLESS OTHERWISE SHOWN.
3. #4 DOWELS @ 12"-2' LONG WITH ONE END WRAPPED TO PREVENT BOND SHALL BE PLACED IN CENTER OF TOP SLAB AND WALLS, AND 3 1/2" FROM TOP OF INVERT SLAB.
4. REMOVE & RECONSTRUCT INTERFERING PORTION OF 2 1/2" THICK REINFORCED GUNITE CHANNEL WALLS AND 3 5/8" THICK UNREINFORCED GUNITE INVERT SLAB. TIE CHANNEL WALL REINFORCING INTO WALLS OF OUTLET STRUCTURE.
5. IN ACCORDANCE WITH SECTIONS 7.6 AND 12.5 OF A.C.I. STANDARD 318-71, SPLICES SHALL BE CLASS C, 1.7 TIMES THE BASIC DEVELOPMENT LENGTH. SPLICES FOR HORIZONTAL REINFORCEMENT IN WALLS SHALL BE INCREASED AN ADDITIONAL 40%. ALL SPLICES ARE SUBJECT TO APPROVAL BY THE ENGINEER.

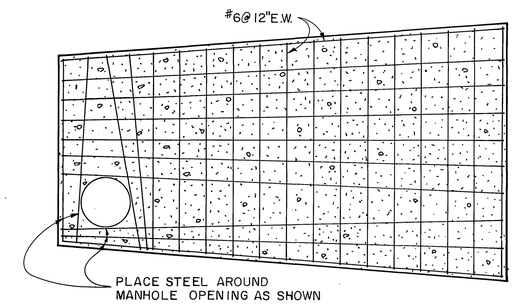

SECTION G / 28

3/8" = 1'-0"

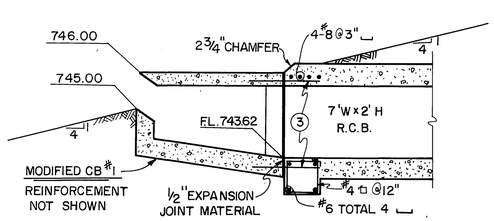

SECTION A / 1/2" = 1'-0"

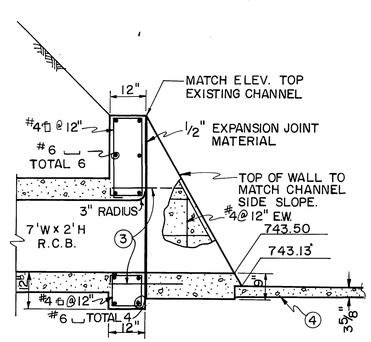

SECTION B / 1/2" = 1'-0"

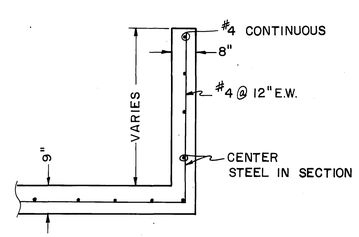

SECTION C / NO SCALE

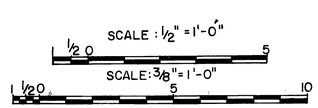

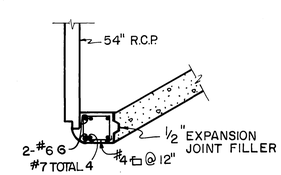

SECTION H / NO SCALE

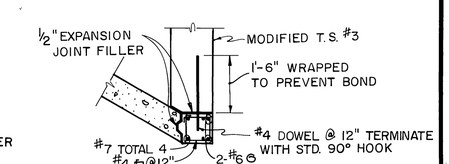

SECTION I / NO SCALE

REVISIONS			
	No Changes		
REF.	DESCRIPTION	APPR.	DATE

RIVERSIDE COUNTY FLOOD CONTROL AND WATER CONSERVATION DISTRICT

DESIGNED BY: R. M.
DRAWN BY: S. Moody
DATE DRAWN:
CHECKED BY:

APPROVED BY: John W. Bergsnt
CHIEF ENGINEER R.E. NO. 8822
DATE: 2-26-76

ANZA CHANNEL
STAGE II
STRUCTURAL DETAILS
1970 STORM DRAIN BOND ISSUE PROJECT NO. 18

INDEX UP

PROJECT NO. 1-0-150
DRAWING NO. 1-319
SHEET NO. 29 OF 81

AS BUILT

D-353

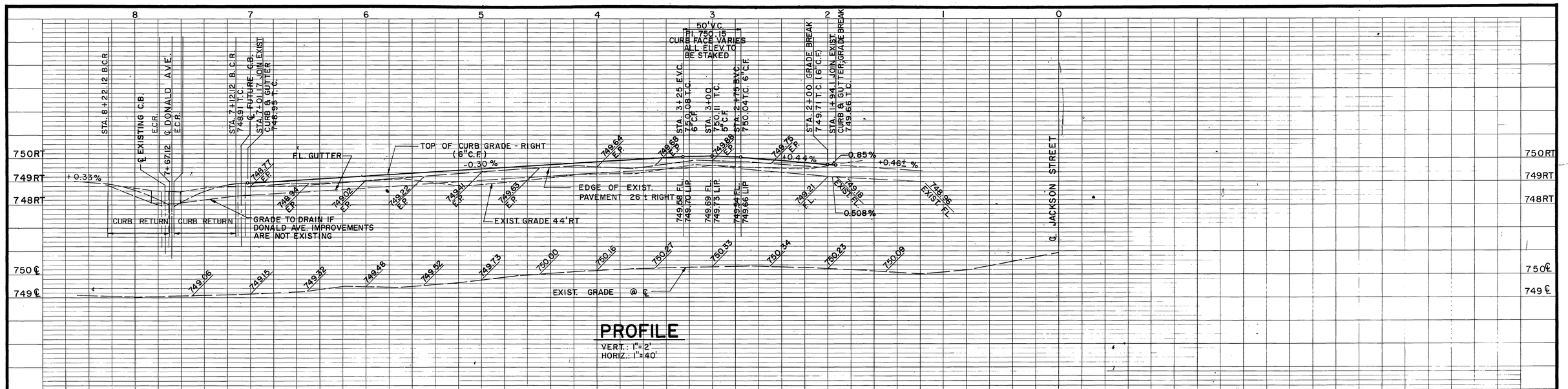

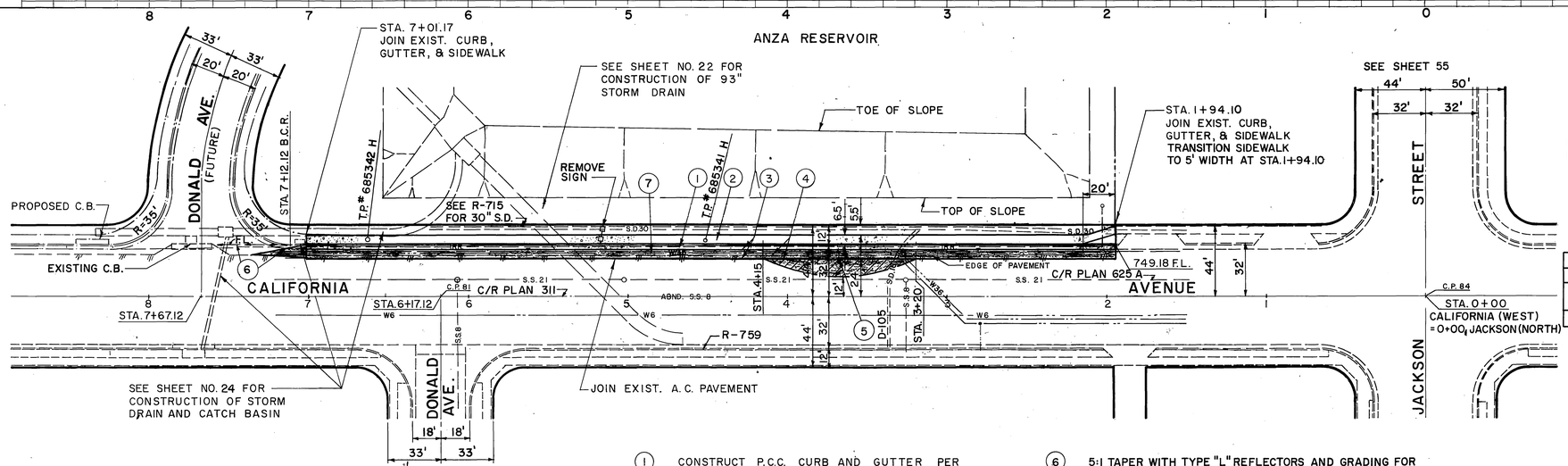

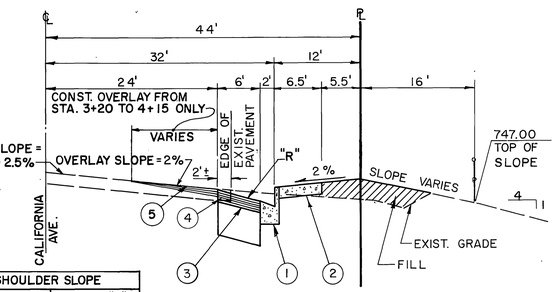

SHOULDER SLOPE	
STATION	SLOPE "R"
1+94 TO 3+20	VARIES FROM
4+15 TO 7+01	3% TO 5.3 %
3+50 TO 4+00	4.5%

TYPICAL SECTION

NO SCALE

T. I. = 6

1. CONSTRUCT P.C.C. CURB AND GUTTER PER CITY OF RIVERSIDE STD. DWG. NO. 200 (6" C.F.)
2. CONSTRUCT 6' P.C.C. CURB SIDEWALK PER CITY OF RIVERSIDE STD. DWG. NO. 325.
3. CONSTRUCT 4" A. C. PAVEMENT ON 14-1/2" D.G. OR 9-1/2" A.C. OVER COMPACTED NATIVE MATERIAL PER TYPICAL SECTION AND PLAN.
4. REMOVE EXISTING PAVEMENT.
5. OVERLAY VARIABLE THICKNESS A.C. PAVEMENT OVER EXIST. PAVEMENT PER TYPICAL SECTION AND PLAN
6. 5:1 TAPER WITH TYPE "L" REFLECTORS AND GRADING FOR DRAINAGE REQUIRED IF DONALD AVE. IMPROVEMENTS ARE NOT EXISTING.
7. IRRIGATION PIPE BETWEEN STA. 2+00± & 7+10± SHALL BE REMOVED OR CRUSHED IN PLACE. CONSTRUCT PLUG AT STA. 7+10±

GENERAL NOTES

1. ALL CONSTRUCTION SHALL BE PERFORMED IN ACCORDANCE WITH THE STANDARD SPECIFICATIONS FOR PUBLIC WORKS CONSTRUCTION, 1973 EDITION, AND THE CITY OF RIVERSIDE STANDARD DRAWINGS.
2. CURB WILL BE STAKED AT 25' INTERVALS AND 3' OFFSETS WHERE GRADES ARE 0.4% OR GREATER. CURB HAVING GRADES OF LESS THAN 0.4% WILL BE STAKED AT 12.5' INTERVALS AND 3' OFFSETS. IN ADDITION, ON CURB GRADES LESS THAN 0.4%, TWO ROWS OF NO. 3 REINFORCING BARS WILL BE PLACED IN THE GUTTER AND IN ALL CURB WITH LESS THAN 0.4% GRADE, 3/4" SOLID STEEL DOWELS WILL BE REQUIRED AT ALL EXPANSION JOINTS.
3. QUARTER CROWN POINT SHALL BE STAKED ON JACKSON STREET AS SHOWN IN TYPICAL SECTION AND PROFILE.

IRRIGATION LINE APPROVAL
DATE

PLAN

1"=40'

40' 0 40'

CITY OF RIVERSIDE, CALIFORNIA
DEPARTMENT OF PUBLIC WORKS

APPROVED BY	BY	DATE
OFFICE ENGINEER	RKW	6/12
PARK DEPARTMENT		
TRAFFIC DIVISION	RLJ	9/10
ASSISTANT CITY ENG.		6/23

APPROVED BY
DIRECTOR OF PUBLIC WORKS
DATE 6-24-75

BENCH MARK PK NAIL IN LEAD IN SE CB. RET. CALIFORNIA AND JACKSON F.B. 629/75 ELEV.: 749.70

SCALE:

DATE:

ALDERMAN SWIFT & LEWIS CONSULTING ENGINEERS

APPROVED BY
DATE April 24, 1974
REGISTERED CIVIL ENGINEER NO. 14543

REVISIONS			
REF.	DESCRIPTION	APPR.	DATE

RIVERSIDE COUNTY FLOOD CONTROL AND WATER CONSERVATION DISTRICT

DESIGNED BY: K.E.K.
DRAWN BY: R.D.F.
DATE DRAWN: APRIL 1974
CHECKED BY: G.L.H. / K.E.K

APPROVED BY:
CHIEF ENGINEER R.E. NO. 8822
DATE: 2-26-76

CITY OF RIVERSIDE DRAWING NO.

STREET IMPROVEMENT
ANZA CHANNEL
STAGE II
CALIFORNIA AVENUE
N'LY SIDE FROM 194' TO 701' W'LY OF JACKSON
1970 STORM DRAIN BOND ISSUE PROJECT NO. 18

PROJECT NO. 1-0-150
DRAWING NO. 1-319
SHEET NO. 30 OF 81

D-353

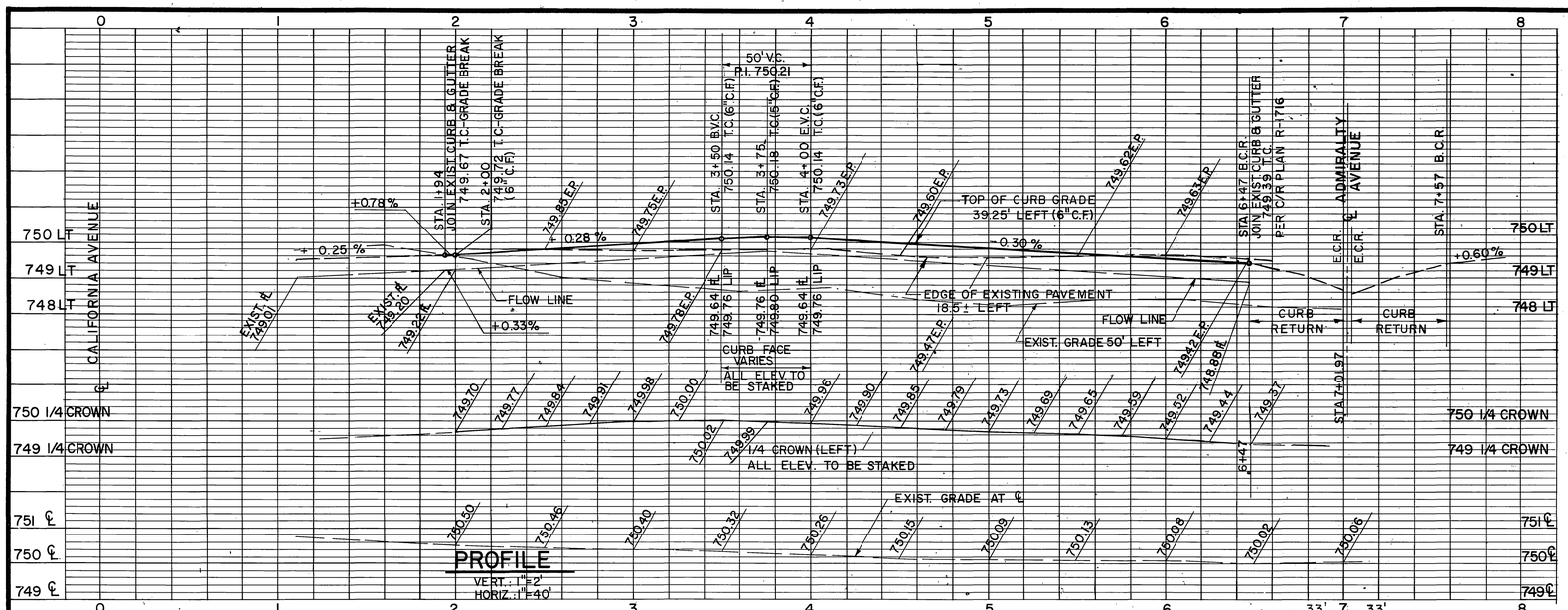

PROFILE

VERT.: 1"=2'
HORIZ.: 1"=40'

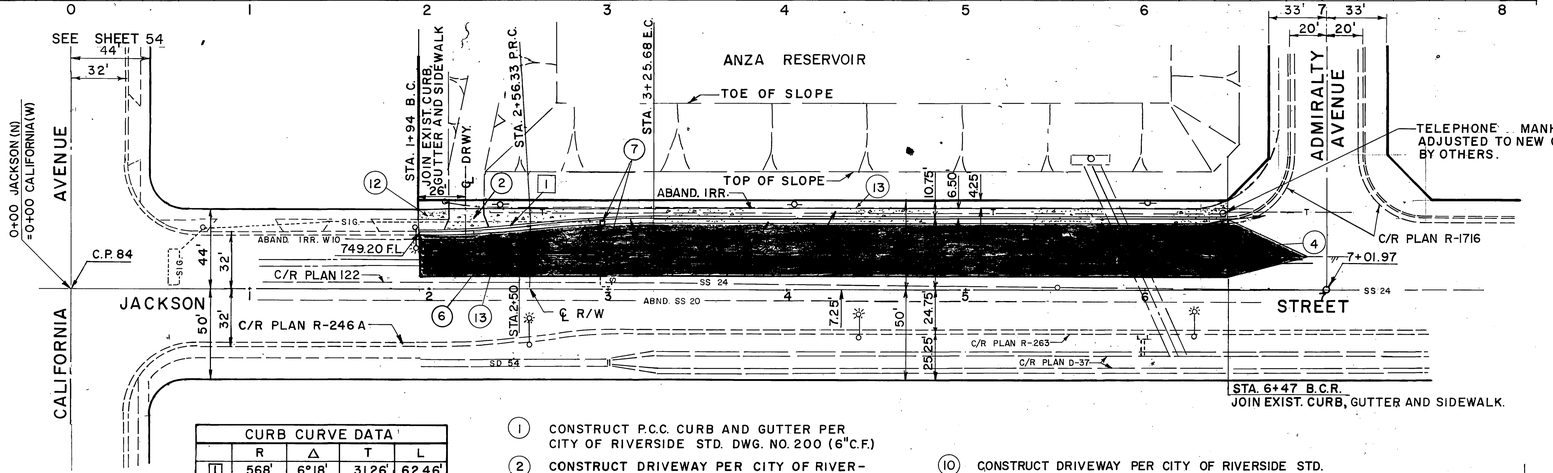

CURB CURVE DATA				
	R	Δ	T	L
1	568'	6°18'	31.26'	62.46'
2	632'	6°18'	34.78'	69.49'
REF.: C/R PLAN R-246 A				

NOTE: FOR GENERAL NOTES SEE SHEET NO. 30.

1. CONSTRUCT P.C.C. CURB AND GUTTER PER CITY OF RIVERSIDE STD. DWG. NO. 200 (6" C.F.)
2. CONSTRUCT DRIVEWAY PER CITY OF RIVERSIDE STD. DWG. NO. 302 TYPE V A=20', B=27'
3. CONSTRUCT 6' P.C.C. CURB SIDEWALK PER CITY OF RIVERSIDE STD. DWG. NO. 325
4. CONSTRUCT 4" A.C. PAVEMENT ON 14-1/2" D.G. OR 9-1/2" A.C. OVER COMPACTED NATIVE MATERIAL PER TYPICAL SECTION AND PLAN
5. OVERLAY VARIABLE THICKNESS A.C. PAVEMENT OVER EXISTING PAVEMENT PER TYPICAL SECTION AND PLAN.
6. REMOVE EXISTING PAVEMENT.
7. RELOCATE TRAFFIC SIGNAL PULL BOX AND CONDUIT BEHIND CURB AND INSTALL TWO NEW 6' x 6' TRAFFIC SIGNAL DETECTOR LOOPS PER CITY OF RIVERSIDE TRAFFIC DEPARTMENT REQUIREMENTS. NOTIFY TRAFFIC ENGINEER 72 HOURS PRIOR TO WORK IN THIS AREA, PHONE 787-7576
8. REMOVE EXISTING CURB AND GUTTER
9. CONSTRUCT 3" A.C. PAVEMENT ON 6" D.G. BASE
10. CONSTRUCT DRIVEWAY PER CITY OF RIVERSIDE STD. DWG. NO. 302 TYPE IV, A=12', B=19'
11. ADJUST SEWER CLEANOUT TO NEW GRADE PER CITY OF RIVERSIDE STD. DWG. NO. 560.
12. CONSTRUCT MODIFIED ℄ SIDEWALK PER CITY OF RIVERSIDE STD. DWG. NO. 325. (TRANSITION FROM 5' WIDE AT STA. 1+94 TO 6' WIDE AT STA. 2+10)
13. ABANDONED IRRIGATION LINE BETWEEN STA. 1+94± & STA. 6+47± SHALL BE REMOVED OR CRUSHED IN PLACE.

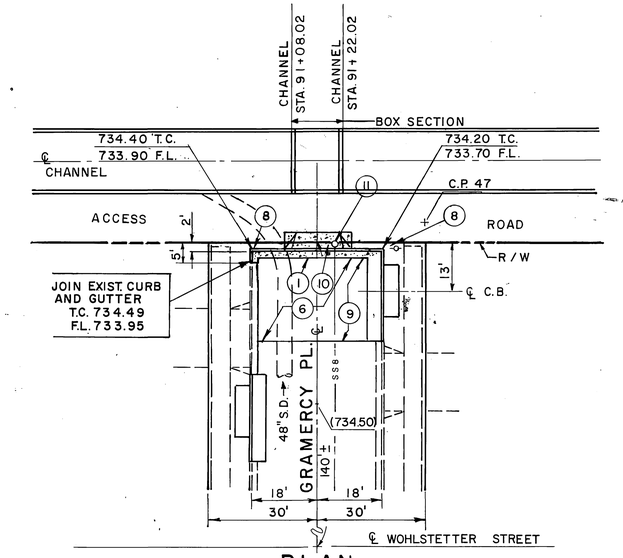

PLAN

1"=20'

NOTES:

1. FOR CONSTRUCTION OF CATCH BASINS, LOCAL DEPRESSIONS AND STORM DRAIN SEE SHEET NO. 4.
2. FOR BENCH MARK SEE SHEET NO. 4.

GRAMERCY PLACE

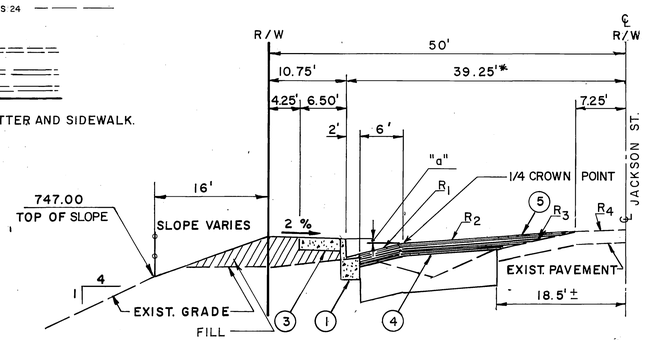

* VARIES FROM 32' AT STA. 1+94 TO 39.25' AT STA. 3+25.68 (SEE PLAN VIEW)

TYPICAL SECTION

NO SCALE
T.I.=6

STATION	"a"	R_1	R_2	R_3	R_4
2+00	0.02'	6.00%	4.70%	5.2%	0%
2+25	0.02'	6.00%	4.06%	5.3%	0%
2+50	0.02'	6.00%	3.26%	5.7%	0%
2+75	0.02'	6.00%	2.40%	5.8%	0%
3+00	0.02'	6.00%	1.80%	5.8%	0%
3+25	0.07*	5.17%	1.50%	5.3%	0%
3+50	0.12'	4.33%	1.25%	4.7%	0%
3+75	0.19'	3.17%	1.25%	4.2%	0%
4+00	0.18'	3.33%	1.25%	4.0%	0%
4+25	0.16'	3.67%	1.25%	4.0%	0.4%
4+50	0.14'	4.00%	1.25%	4.0%	0.3%
4+75	0.12'	4.33%	1.40%	4.3%	0.9%
5+00	0.11'	4.50%	1.50%	4.6%	0.3%
5+25	0.07'	5.17%	1.75%	4.6%	0.1%
5+50	0.04'	5.67%	2.00%	4.5%	0.2%
5+75	0.02'	6.00%	2.12%	4.2%	0.3%
6+00	0.02'	6.00%	2.33%	4.0%	0.3%
6+25	0.02'	6.00%	2.54%	4.1%	0.2%
6+47	0.02'	6.00%	2.70%	4.2%	0.2%

PLAN

1"=40

IRRIGATION LINE APPROVAL
DATE

CITY OF RIVERSIDE, CALIFORNIA
DEPARTMENT OF PUBLIC WORKS

APPROVED BY	BY	DATE
OFFICE ENGINEER	RPW	6/76
PARK DEPARTMENT		
TRAFFIC DIVISION	R-7	9/10
ASSISTANT CITY ENG.		6-23

APPROVED BY
DIRECTOR OF PUBLIC WORKS
DATE 6-24-76

BENCH MARK: PK NAIL IN LEAD IN SE CB. RET. CALIFORNIA AND JACKSON F.B. 629/75 ELEV.: 749.70

SCALE:

DATE:

ALDERMAN SWIFT & LEWIS CONSULTING ENGINEERS

APPROVED BY
DATE April 29, 1974
REGISTERED CIVIL ENGINEER NO. 11543

REVISIONS			
REF.	DESCRIPTION	APPR.	DATE

RIVERSIDE COUNTY FLOOD CONTROL AND WATER CONSERVATION DISTRICT

DESIGNED BY: K.E.K.
DRAWN BY: S.B.G.
DATE DRAWN: APRIL, 1974
CHECKED BY: G.L.H., K.E.K.

APPROVED BY:
CHIEF ENGINEER R.E. NO. 8822
DATE: 8-26-76

CITY OF RIVERSIDE DRAWING NO.

STREET IMPROVEMENT
ANZA CHANNEL
STAGE II
JACKSON STREET AND GRAMERCY PLACE
1970 STORM DRAIN BOND ISSUE PROJECT NO. 18

PROJECT NO. 1-0-150
DRAWING NO. 1-319
SHEET NO. 31 OF 81

D-353

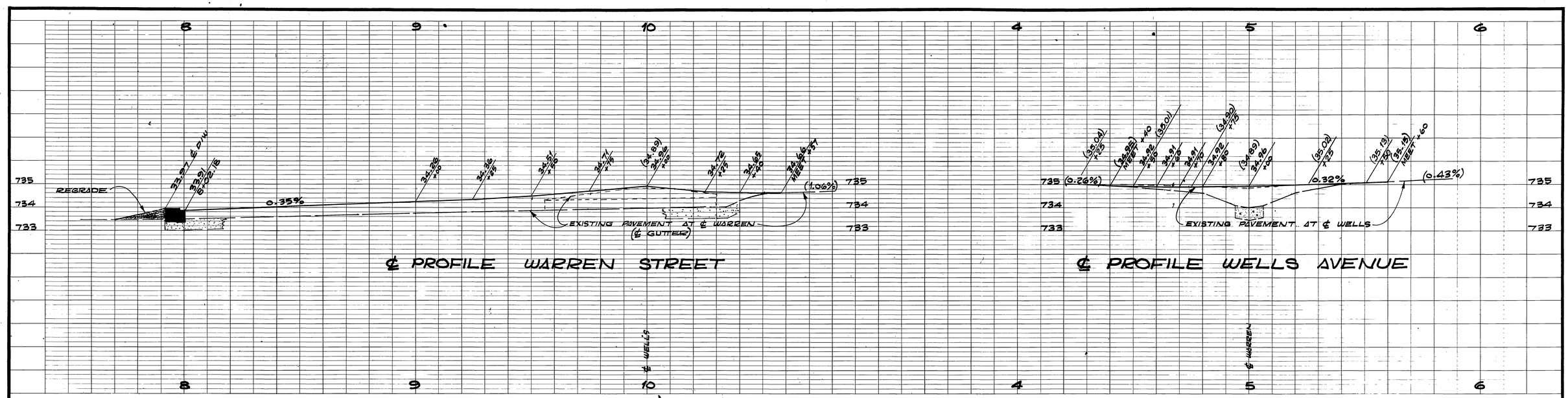

CURVE DATA

	RADIUS	DELTA	TANGENT	LENGTH
①	10'	97°41'55"	11.44'	16.97'
②	10'	82°18'05"	8.74'	14.36'

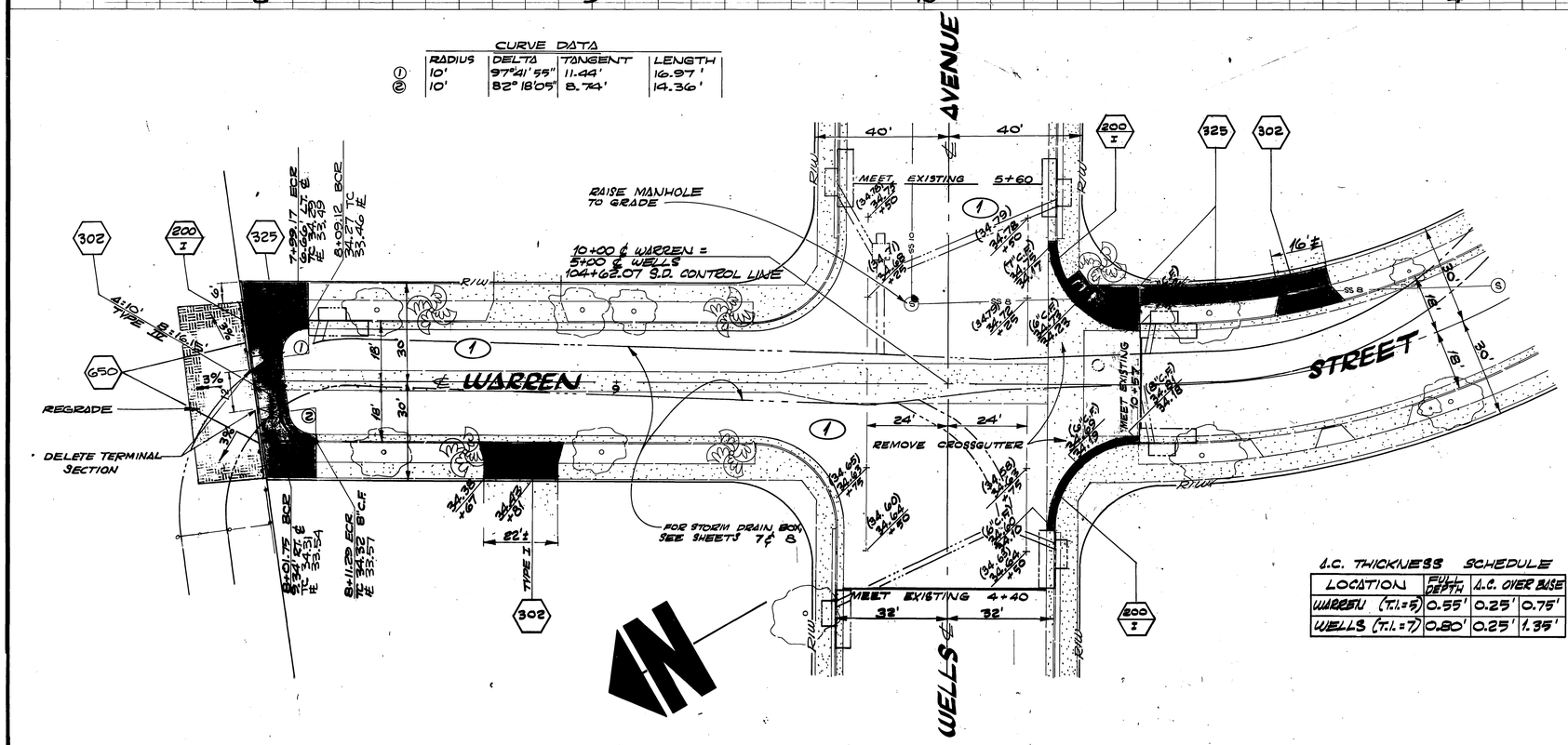

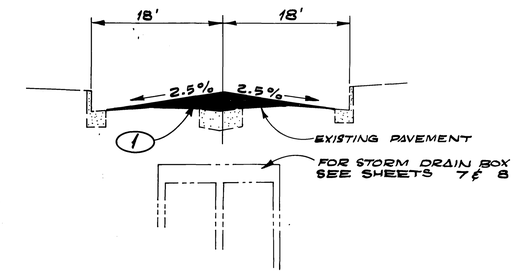

TYPICAL SECTION WARREN STREET

NORTH OF WELLS AVENUE ONLY

SCALE: HORIZ. 1"=10' VERT. 1"=2'

A.C. THICKNESS SCHEDULE

LOCATION	FULL DEPTH	A.C. OVER BASE	
WARREN (T.I.=5)	0.55'	0.25'	0.75'
WELLS (T.I.=7)	0.80'	0.25'	1.35'

⬡ CONSTRUCT PER CITY OF RIVERSIDE STANDARD DRAWING NUMBER AS SHOWN ON PLAN.

CURB RETURNS ARE 25' RADIUS

① WHERE PAVEMENT EXISTS, OVERLAY WITH VARIABLE THICKNESS OF A.C. TO LIMITS AND GRADES SHOWN. WHERE PAVEMENT HAS BEEN REMOVED OR IS UNSATISFACTORY, REMOVE AND REPLACE TO LIMITS AND GRADES ON THE PLANS AND TO THE THICKNESSES FROM THE SCHEDULE AT LEFT.

ALL NEW PAVEMENT, DRIVEWAYS, AND CURB & GUTTER ELEVATIONS SHOWN ON PLAN SHALL BE STAKED.

CITY/ RIVERSIDE NUMBER R-1758

SCALE: 1"=20'

20' 0 20'

REVISIONS			
REF.	DESCRIPTION	APPR.	DATE

RIVERSIDE COUNTY FLOOD CONTROL AND WATER CONSERVATION DISTRICT

DESIGNED BY: W
DRAWN BY: R.W. Barry
DATE DRAWN: MAY 1974
CHECKED BY: DCH

APPROVED BY: John W. Bryant
CHIEF ENGINEER R.E. NO. 8822
DATE: 2-26-76

STREET IMPROVEMENT
ANZA CHANNEL
STAGE I
WARREN STREET
1970 STORM DRAIN BOND ISSUE PROJECT NO. 18

INDEX WE

PROJECT NO. 1-0-150
DRAWING NO. 1-319
SHEET NO. 32 OF 81

D-353

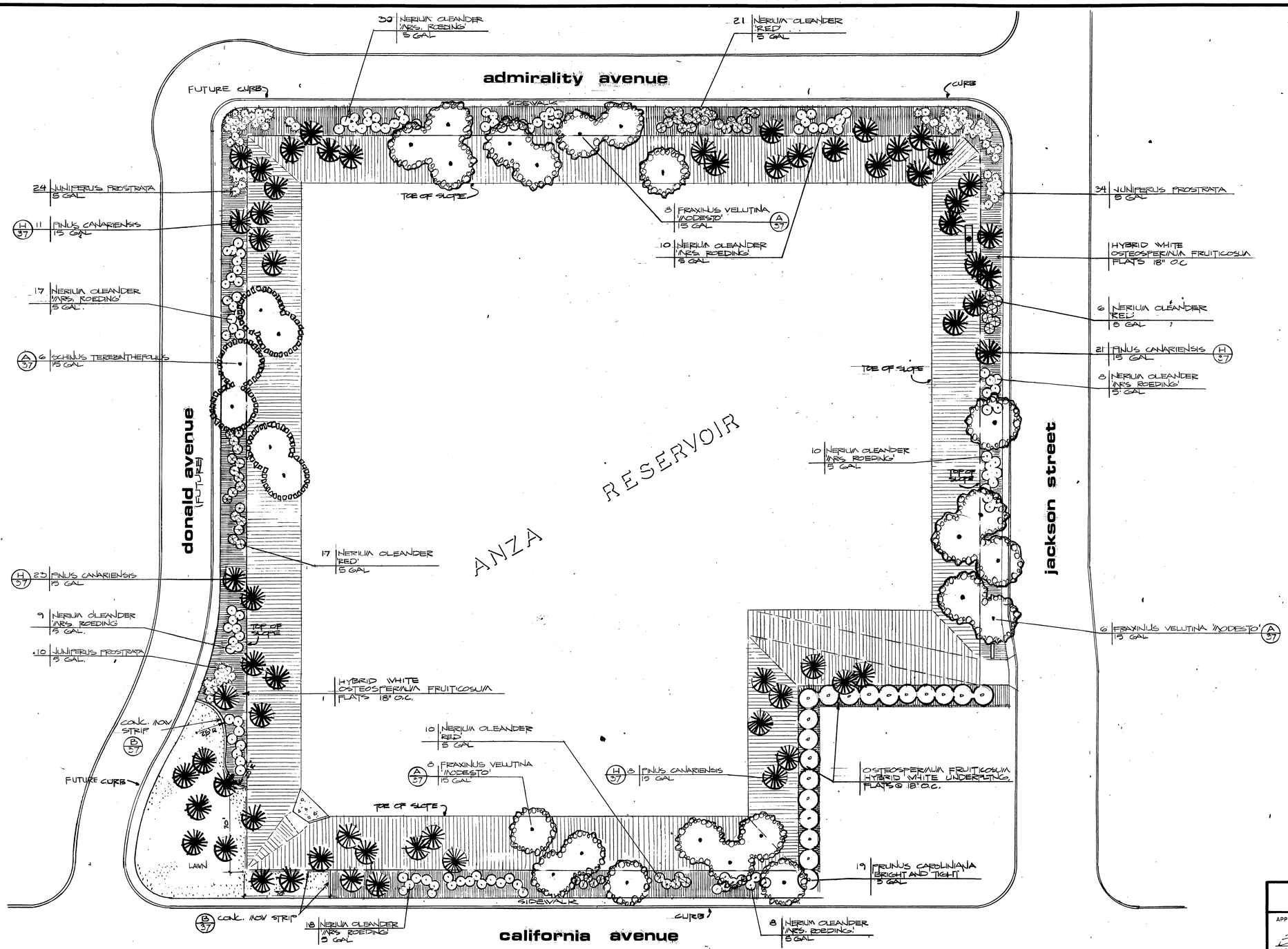

LAWN SEED MX
OCT. 1 - MAY 30
60% MARION BLUE
15% NEWPORT KENTUCKY BLUE
15% CHEWING FESCUE
10% CREEPING RED FESCUE
@ 7 lbs./1000 SQ.FT.
JUNE 1 - SEPT. 30 NO LAWNS SHALL BE PLANTED DURING THIS PERIOD

EXHIBIT B

CITY OF RIVERSIDE, CALIFORNIA
PARK AND RECREATION DEPARTMENT

APPROVED BY
Ethel M. Brown 2/25/76
PARK AND RECREATION DIRECTOR DATE

PLAN
1" = 40'
40' 0 40'

BENCH MARK
SCALE:
DATE:

ERIKSSON · PETERS and THOMS
Landscape Architects
696 E. Colorado Blvd. Pasadena 91101
D.C. Thoms 032

ALDERMAN SWIFT & LEWIS CONSULTING ENGINEERS
APPROVED BY
DATE April 24, 1974
REGISTERED CIVIL ENGINEER NO. 11543

REVISIONS

REF.	DESCRIPTION	APPR.	DATE

RIVERSIDE COUNTY FLOOD CONTROL AND WATER CONSERVATION DISTRICT
DESIGNED BY:
DRAWN BY: MEB
DATE DRAWN:
CHECKED BY:
APPROVED BY: John W. Bryant
CHIEF ENGINEER R.E. NO. 8822
DATE: 2-25-76

ANZA CHANNEL
STAGE II
ANZA RESERVOIR LANDSCAPE PLAN
1970 STORM DRAIN BOND ISSUE PROJECT NO. 18

INDEX WE
PROJECT NO. 1-0-150
DRAWING NO. 1-319
SHEET NO. 33 OF 81

D-353

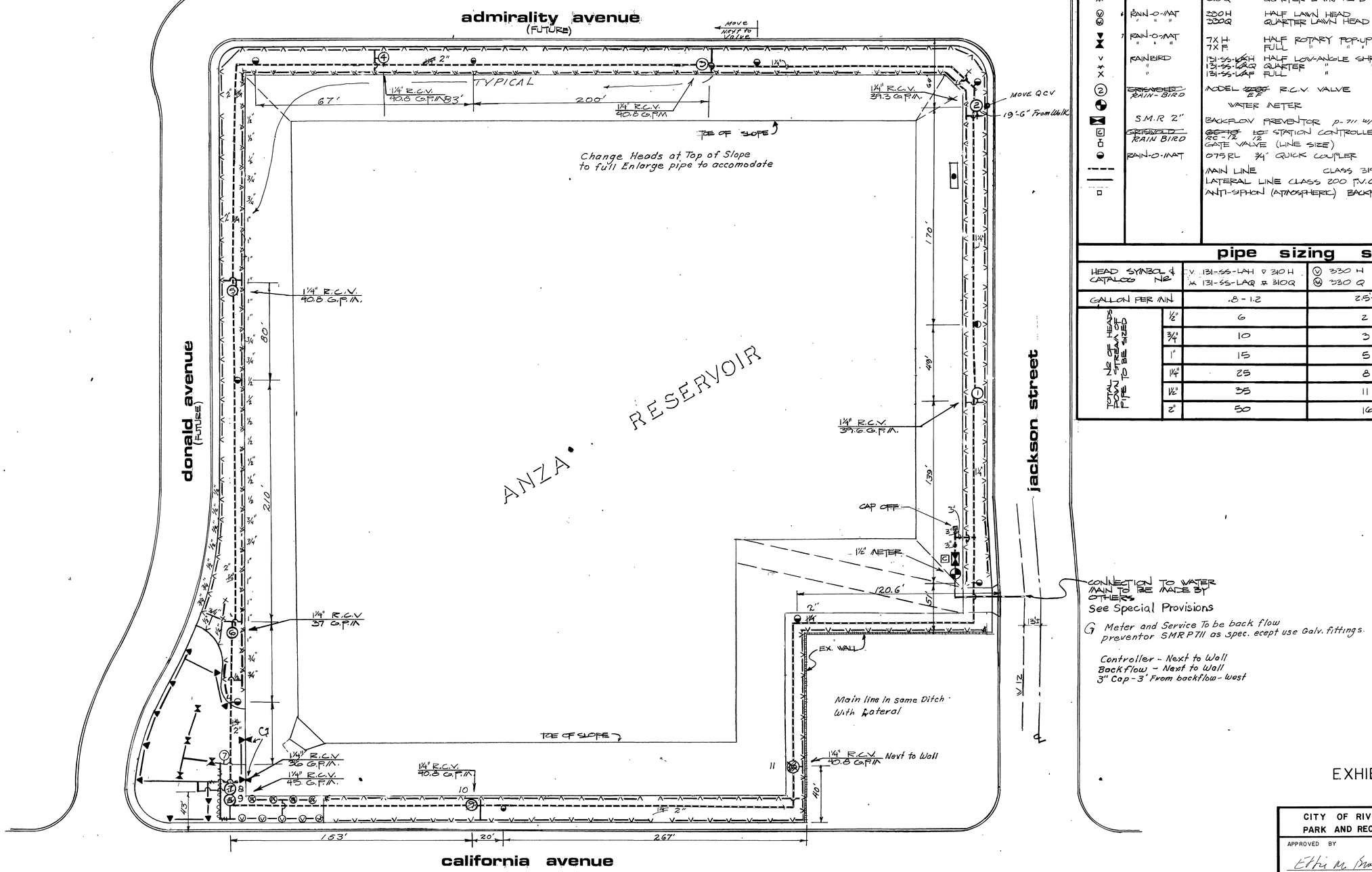

CONNECTION TO WATER MAIN TO BE MADE BY OTHERS
See Special Provisions

G Meter and Service To be back flow preventor SMRP711 as spec. ecept use Galv. fittings.

Controller - Next to Wall
Backflow - Next to Wall
3" Cap - 3' From backflow - West

irrigation legend

SYMBOL	MANUFACT.	CAT. NO. & DESCRIPTION	G.P.M.	P.S.I.	RAD.	REF.
▽	RAIN-O-MAT	310 H HALF LAWN HEAD	1	15	10'	C/37
⊠	" " "	310 Q QUARTER LAWN HEAD	.8	15	10'	
⊗	RAIN-O-MAT	330 H HALF LAWN HEAD	3	30	15'	
⊗	" " "	330 Q QUARTER LAWN HEAD	2.5	30	15'	
▼	RAIN-O-MAT	7X H HALF ROTARY POP-UP	3	35	50'	D/37
⧗	" " "	7X F FULL " " "	4.5	35	50'	
v	RAINBIRD	131-SS-LAH HALF LOW-ANGLE SHRUB STREAM	1.2	30	16'	C/37
✱	"	131-SS-LAQ QUARTER " " "	.8	30	16'	
X	"	131-SS-LAF FULL " " "	2.1	30	16'	
②	~~GRISWOLD~~ RAIN-BIRD	MODEL ~~220~~ EF R.C.V. VALVE				E/37
		WATER METER				
	S.M.R 2"	BACKFLOW PREVENTOR p-711 w/Galv. fittings				G/37
C	~~GRISWOLD~~ RAIN BIRD	~~GC-12~~ RC-12 ~~LC~~ 12 STATION CONTROLLER W/ PEDESTAL MOUNT				
		GATE VALVE (LINE SIZE)				
●	RAIN-O-MAT	075 RL ¾" QUICK COUPLER				F/37
----		MAIN LINE CLASS 315 P.V.C.				
——		LATERAL LINE CLASS 200 P.V.C. (SEE PIPE SIZING CHART)				
□		ANTI-SIPHON (ATMOSPHERIC) BACKFLOW PREVENTOR				

pipe sizing schedule

HEAD SYMBOL & CATALOG No.		V 131-SS-LAH ▽ 310 H ✱ 131-SS-LAQ ⊠ 310Q	⊗ 330 H ▼ 7X H ⊗ 330 Q	⧗ 7XF
GALLON PER MIN		.8 - 1.2	2.5-3	4.5
TOTAL No. OF HEADS DOWN STREAM OF PIPE TO BE SIZED	½"	6	2	1
	¾"	10	3	2
	1"	15	5	3
	1¼"	25	8	5
	1½"	35	11	7
	2"	50	16	11

EXHIBIT B

CITY OF RIVERSIDE, CALIFORNIA
PARK AND RECREATION DEPARTMENT
APPROVED BY
Ethel M. Brown 2/25/76
PARK AND RECREATION DIRECTOR DATE

PLAN
1" = 40'
40' 0 40'

BENCH MARK
SCALE:
DATE:

ERIKSSON PETERS and THOMS
Landscape Architects
696 E. Colorado Blvd Pasadena 91101
D.C. Thoms 032

ALDERMAN SWIFT & LEWIS CONSULTING ENGINEERS
APPROVED BY
DATE April 24, 1974
REGISTERED CIVIL ENGINEER NO. 11543

REVISIONS

REF.	DESCRIPTION	APPR.	DATE
C7	Change Pipe Sizes - As Shown	WDG	4/24/77

RIVERSIDE COUNTY FLOOD CONTROL AND WATER CONSERVATION DISTRICT
DESIGNED BY:
DRAWN BY: M.E.B.
DATE DRAWN:
CHECKED BY:
APPROVED BY: John W. Bryant
CHIEF ENGINEER R.E. NO. 8822
DATE: 2-25-76

ANZA CHANNEL
STAGE II
ANZA RESERVOIR IRRIGATION PLAN
1970 STORM DRAIN BOND ISSUE PROJECT NO. 18

INDEX WF
PROJECT NO 1-0-150
DRAWING NO. 1-319
SHEET NO 34 OF 81

AS BUILT

D-353

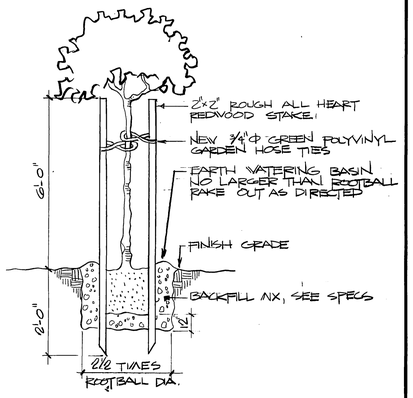

TREE STAKING DETAIL A/37

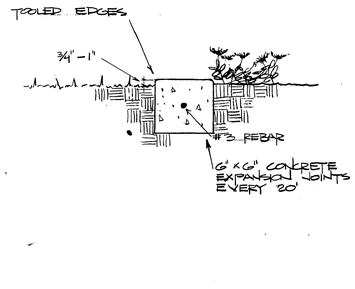

MOV STRIP DETAIL B/37

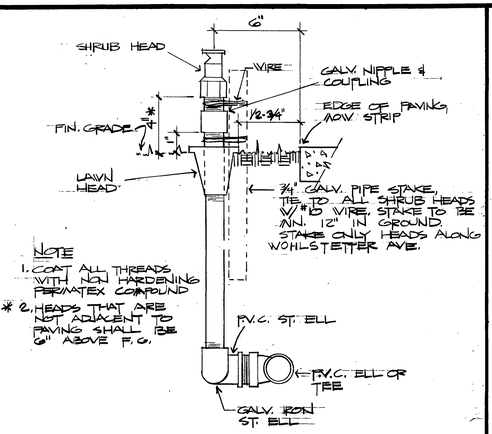

LAWN & SHRUB HEAD DETAIL C/37

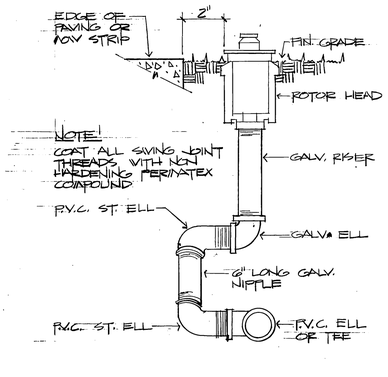

ROTARY HEAD DETAIL D/37

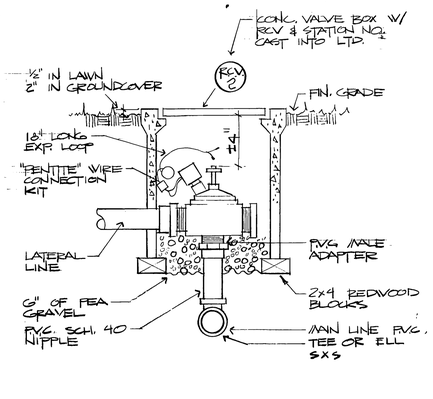

CONTROL VALVE DETAIL E/37

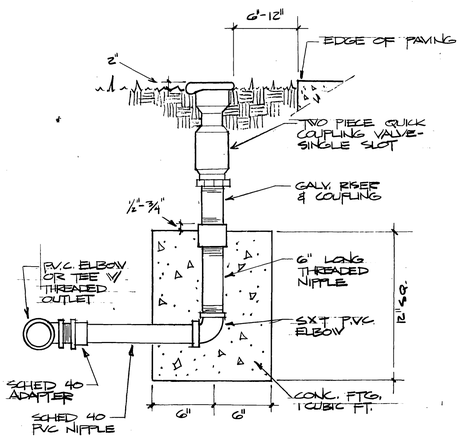

QUICK COUPLER DETAIL F/37

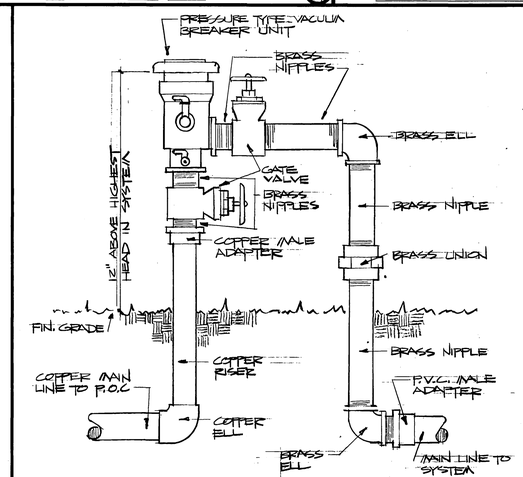

VACUUM BREAKER DETAIL G/37

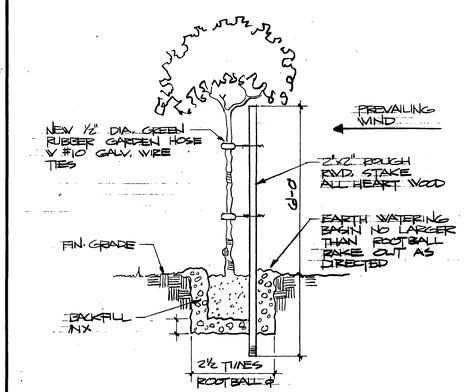

TREE STAKING DETAIL H/37

BENCH MARK	ERIKSSON • PETERS and THOMS Landscape Architects 696 E. Colorado Blvd. Pasadena 91101 D. C. Thoms 1032	ALDERMAN SWIFT & LEWIS CONSULTING ENGINEERS	APPROVED BY DATE April 26 1974 REGISTERED CIVIL ENGINEER NO. 16543	REVISIONS REF. DESCRIPTION APPR. DATE	RIVERSIDE COUNTY FLOOD CONTROL AND WATER CONSERVATION DISTRICT DESIGNED BY: DRAWN BY: M.E.B. DATE DRAWN: CHECKED BY: APPROVED BY: John W. Bryant CHIEF ENGINEER R.E. NO. 8822 DATE: 2-26-76
SCALE:					
DATE:					

ANZA CHANNEL
STAGE II
LANDSCAPING AND IRRIGATION DETAILS
1970 STORM DRAIN BOND ISSUE PROJECT NO. 18

PROJECT NO. 1-0-150
DRAWING NO. 1-319
SHEET NO. 35 OF 81

INDEX E

AS BUILT

D-353

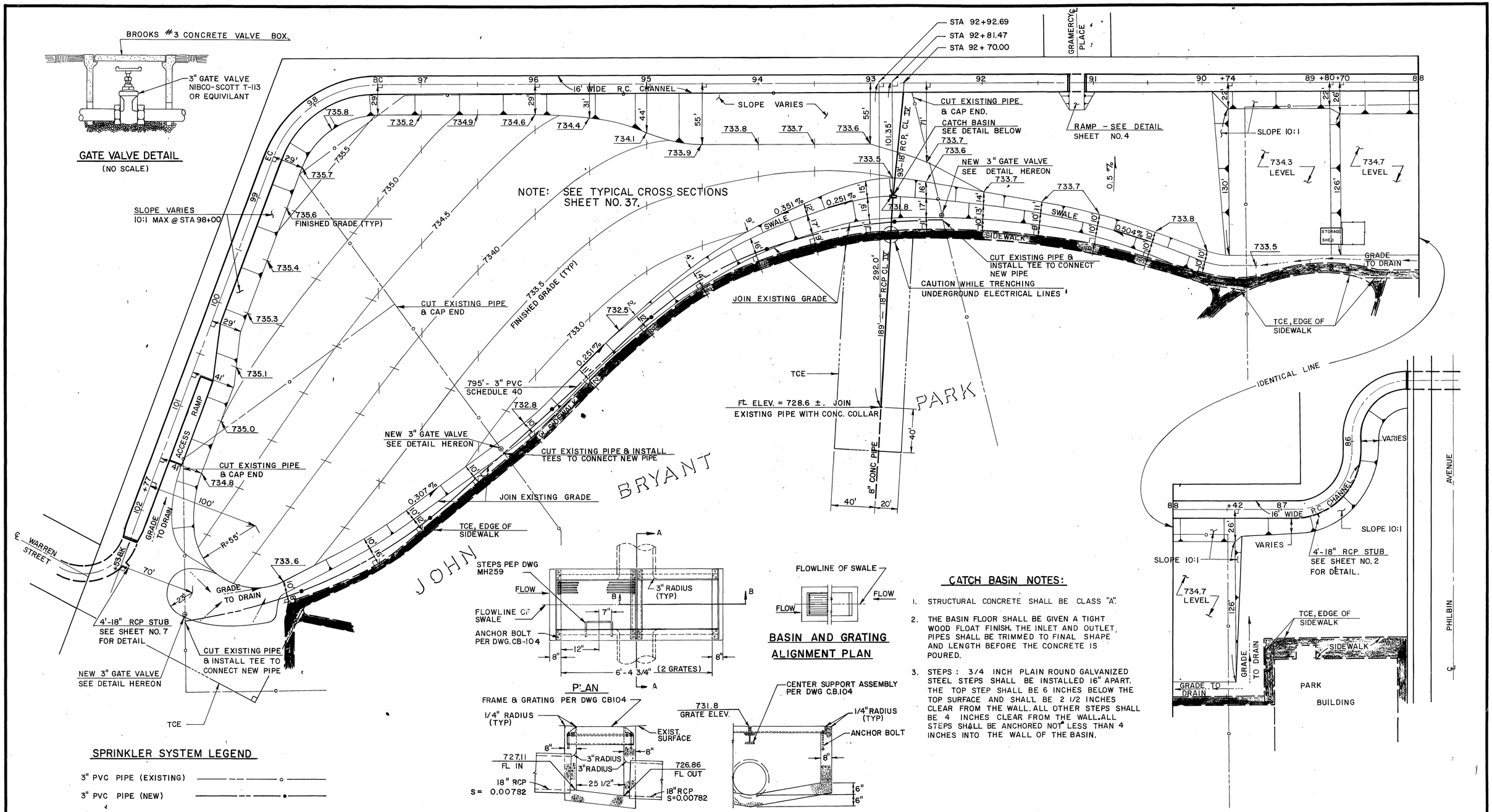

CATCH BASIN NOTES:

1. STRUCTURAL CONCRETE SHALL BE CLASS "A".
2. THE BASIN FLOOR SHALL BE GIVEN A TIGHT WOOD FLOAT FINISH. THE INLET AND OUTLET PIPES SHALL BE TRIMMED TO FINAL SHAPE AND LENGTH BEFORE THE CONCRETE IS POURED.
3. STEPS : 3/4 INCH PLAIN ROUND GALVANIZED STEEL STEPS SHALL BE INSTALLED 16" APART. THE TOP STEP SHALL BE 6 INCHES BELOW THE TOP SURFACE AND SHALL BE 2 1/2 INCHES CLEAR FROM THE WALL. ALL OTHER STEPS SHALL BE 4 INCHES CLEAR FROM THE WALL. ALL STEPS SHALL BE ANCHORED NOT LESS THAN 4 INCHES INTO THE WALL OF THE BASIN.

EXHIBIT A

CITY OF RIVERSIDE, CALIFORNIA PARK AND RECREATION DEPARTMENT	REVISIONS				RIVERSIDE COUNTY FLOOD CONTROL AND WATER CONSERVATION DISTRICT		ANZA CHANNEL STAGE II JOHN BRYANT PARK DETAILS 1970 STORM DRAIN BOND ISSUE PROJECT NO. 18	INDEX 45 PROJECT NO. 1-0-150 DRAWING NO. 1-319 SHEET NO. 36 OF 81
APPROVED BY Ethel M. Brown PARK AND RECREATION DIRECTOR — DATE 2/25/76					DESIGNED BY: A.G.K. DRAWN BY: L.J.C. DATE DRAWN: 12-30-75 CHECKED BY:	APPROVED BY: John W. Bryant CHIEF ENGINEER R.E. NO. 8822 DATE: 2-25-76		
	REF.	DESCRIPTION	APPR.	DATE				
		No Changes						

AS BUILT

D-353