RIVERSIDE COUNTY FLOOD CONTROL AND WATER CONSERVATION DISTRICT

GENERAL NOTES

1. ALL STATIONING REFERS TO CENTERLINE OF CONSTRUCTION.
2. ALL ELEVATIONS ARE IN FEET, BASED ON U.S.C. & G.S. DATUM.
3. TOPOGRAPHIC FEATURES, BOTH CONTOURS & CULTURE, ARE BASED UPON RIVERSIDE COUNTY FLOOD CONTROL & WATER CONSERVATION DISTRICT PHOTOGRAMMETRY DATED MARCH 30, 1962, SUPPLEMENTED BY FIELD SURVEYS.
4. STANDARD DRAWINGS CALLED FOR ON THE PLAN & PROFILE SHALL CONFORM TO RIVERSIDE COUNTY FLOOD CONTROL & WATER CONSERVATION DISTRICT OR CITY OF RIVERSIDE STANDARD DRAWINGS LISTED ON THIS SHEET.
5. CATCH BASIN TIES FOR CURB INLET BASINS ARE FROM CURB RETURN TO CENTERLINE OF THE BASIN UNLESS SHOWN OTHERWISE. CATCH BASIN TIES FOR ALL OTHER BASIN TYPES ARE FROM THE C/L OF THE MAINLINE TO THE FACE OF THE BASIN ALONG THE CONNECTOR PIPE UNLESS SHOWN OTHERWISE. ALL CONNECTOR PIPES ARE 90 DEGREES TO THE MAINLINE UNLESS OTHERWISE NOTED. IN ALL CASES, THE EXACT LOCATIONS ARE SUBJECT TO REVISION IN THE FIELD BY THE ENGINEER TO MEET FIELD CONDITIONS.
6. CATCH BASIN CONNECTOR PIPE PROFILES ARE SCHEMATIC ONLY. THE BOTTOM AND SIDES SHOWN ON THE PLANS FOR EACH BASIN REPRESENT THE INSIDE OF THE BASIN, AND THE TOP SHOWN ON THE PLANS REPRESENTS THE OUTSIDE.
7. JUNCTION STRUCTURE NO. 4 SHALL BE CONSTRUCTED FOR JUNCTIONS NOT OTHERWISE SPECIFIED ON THE PLAN AND PROFILE.
8. OPENINGS RESULTING FROM THE CUTTING OR PARTIAL REMOVAL OF EXISTING CULVERTS, PIPES OR SIMILAR STRUCTURES SHALL BE SEALED WITH 8" OF BRICK & MORTAR OR 6" OF CONCRETE NOTED ON THE PLANS AS "PLUG".
9. △2 STREET RESURFACING SHALL BE 3 INCHES ASPHALT CONCRETE OVER 6" CLASS 3 AGGREGATE BASE MINIMUM, UNLESS OTHERWISE NOTED. WHERE ORIGINAL A.C. OR BASE IS THICKER, REPLACE IN KIND UNLESS OTHERWISE NOTED.
10. ALL RESURFACING, CURBS, GUTTERS, SIDEWALKS, DRIVEWAYS AND OTHER EXISTING IMPROVEMENTS TO BE RECONSTRUCTED IN KIND AND AT THE SAME ELEVATION AND LOCATION AS THE EXISTING IMPROVEMENTS, UNLESS OTHERWISE NOTED. SEE CITY OF RIVERSIDE STANDARD DRAWINGS NO. 200 AND 325.
11. WHERE STORM DRAIN CONSTRUCTION CROSSES UNDER SEWER MAINS OR LATERALS, THE SEWER SHALL BE ENCASED PER CITY STANDARD NO. 564.
12. ◐ SOIL BORING NO. 5 – INDICATES SOIL BORINGS DONE IN SEPT. 1963.
    ● BH-3 – INDICATES SOIL BORINGS DONE IN APRIL 1981.
13. ELEVATIONS OF UTILITIES ARE APPROXIMATE UNLESS NOTED OTHERWISE.
14. 48 HOURS BEFORE EXCAVATION, CALL UNDERGROUND SERVICE ALERT 1-800-422-4133.
15. △1 ALL CROSS SECTIONS ARE TAKEN LOOKING DOWNSTREAM.

CITY OF RIVERSIDE

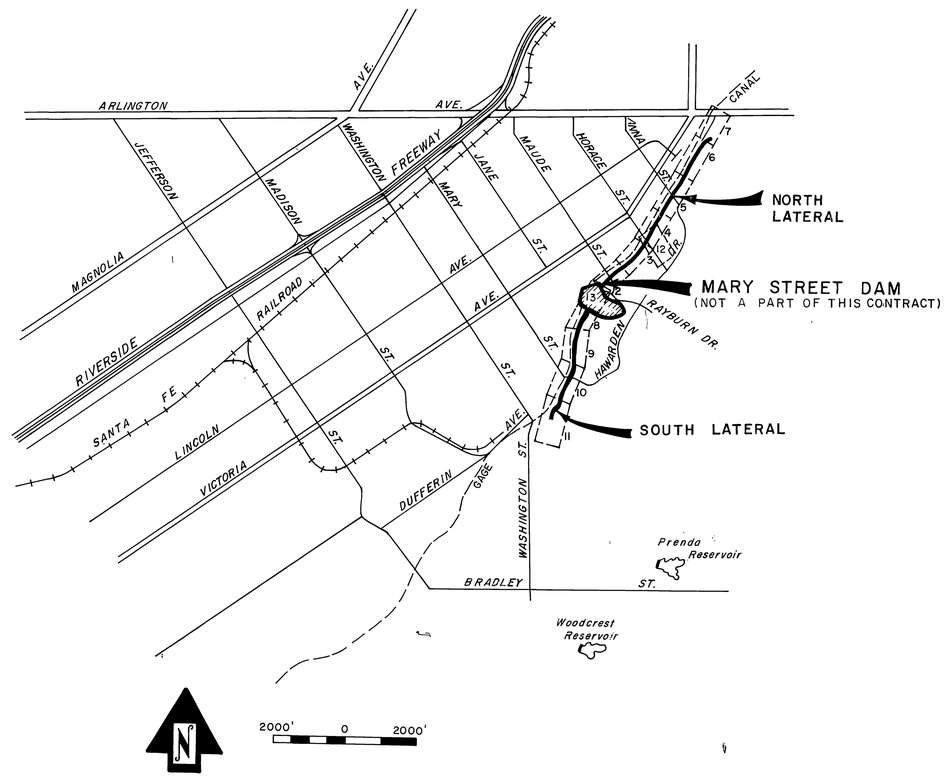

INDEX

	SHEET NO.
TITLE SHEET	1
PLAN & PROFILE (NORTH LATERAL)	2- 7
PLAN & PROFILE (SOUTH LATERAL)	8-11
AMY WAY AND HORACE LATERALS	12
OUTLET CHANNELS	13
CONNECTOR PIPE PROFILES (NORTH LATERAL)	14-15
CONNECTOR PIPE PROFILES (SOUTH LATERAL)	16
OUTLET STRUCTURE DETAILS	17
GAGE CANAL TURNOUT (NORTH LATERAL) AND CONCRETE COLLAR DETAILS	18
DROP INLET (NORTH LATERAL) AND MANHOLE DROP INLET (SOUTH LATERAL) DETAILS	19
TRAFFIC PLANS	20-21

R.C.F.C & W.C.D. STANDARD DRAWINGS

CB100	CATCH BASIN NO. 1	22
CB103	MANHOLE FRAME & COVER	23
CB105	DETAIL OF CATCH BASIN OPENING	24
CB106	CATCH BASIN REINFORCEMENT	25
CB107	INLET TYPE IX	26
CB109	SPECIAL CONNECTIONS TO CATCH BASINS (MODIFIED)	27
CB110	CONC. DROP INLET (MODIFIED)	28
LD201	LOCAL DEPRESSION NO. 2	29
JS227	JUNCTION STRUCTURE NO. 2	30
JS229	JUNCTION STRUCTURE NO. 4	31
MH251	MANHOLE NO. 1	32
MH252	MANHOLE NO. 2	33
MH254	MANHOLE NO. 4	34
MH255	MANHOLE FRAME & COVER, NON-ROCKING	35
MH257	MANHOLE SHAFT FOR CAST PIPE	36
MH259	STANDARD DROP STEP	37
M801	CHAIN LINK FENCE	38
M803	CONC. COLLARS FOR PIPES 12" THROUGH 66"	39
M809	BARRACADES	40
M814	ABBREVIATIONS & SYMBOLS	41
M815	BEDDING & PAYLINES	42
M816	CONCRETE BULKHEAD (MODIFIED)	43

CITY OF RIVERSIDE STANDARD DRAWINGS

200	CURB & GUTTER	44
325	SIDEWALK	45
500	SEWER MANHOLE	46
564	SEWER PIPE ENCASEMENT ACROSS TRENCHES	47

INDEX WF

REVISIONS			
△1	Added Note 15	F.J.P.	6-15-81
△2	Modified Note	F.J.P.	6-18-81
REF.	DESCRIPTION	APPR.	DATE

AS BUILT

RIVERSIDE COUNTY FLOOD CONTROL AND WATER CONSERVATION DISTRICT

DESIGNED BY: J.L.H. & F.J.P.
DRAWN BY: K.R.B.
DATE DRAWN: 5/81
CHECKED BY: [illegible]

APPROVED BY: Kenneth L. Edwards
CHIEF ENGINEER R.E. NO. 12400
DATE: 5-15-81

MARY STREET LATERALS

TITLE SHEET

1970 STORM DRAIN BOND ISSUE PROJECT NO. 13

PROJECT NO. 1-0-181 & 182
DRAWING NO. 1-298
SHEET NO. 1 OF 47

D-445

NOTE: CONTRACTOR SHALL PROTECT IN PLACE ALL UTILITIES CROSSING OR PARALLELING THE STORM DRAIN, UNLESS OTHERWISE NOTED.

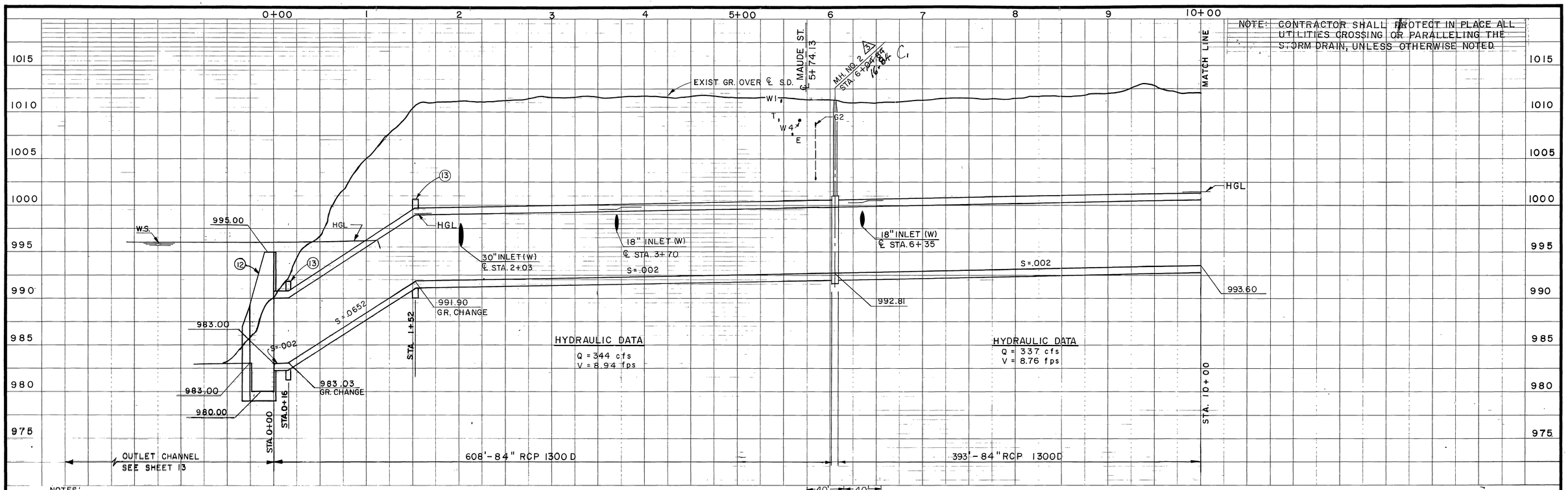

NOTES:

1. SUBSTANDARD PRIVATE TIMBER BRIDGE. THE CONTRACTOR SHALL BE RESTRICTED FROM USE OF THE BRIDGE. PROVIDE CONTINUOUS ACCESS BETWEEN MAUDE ST. AND PRIVATE DRIVE.
2. 3+70 CONC. DROP INLET TOP EL. 1012.00 V=5' INLET TWO SIDES. 12'-18" RCP CL. III. SEE PROFILE SHT. 14.
3. 6+35 CONC. DROP INLET. TOP EL. 1012.00 INLET TWO SIDES. V=5.' 12'-18" RCP CL. III SEE PROFILE SHT. 14.
4. ANCHOR & GUY FOR PP. 26799 J TO BE RELOCATED BY OTHERS PRIOR TO CONSTRUCTION.
5. T.B.M. - CHISLED BOX SOUTH END OF SIDEWALK WEST SIDE OF MAUDE ST. AT GAGE CANAL. EL. 1011.85
6. REMOVE OR CUT & PLUG EXISTING DRAIN AS DIRECTED.
7. CONSTRUCT TRIANGULAR GRADED DITCH TO DRAIN AS SHOWN.
8. △2 EXISTING 6' CHAIN LINK FENCE & GATES. REMOVE & REPLACE AS REQUIRED.
9. PROTECT EUCALYPTUS AND PALM TREES IN PLACE.
10. PROTECT WATER METER, ELECTRIC VAULT AND HOUSE WATER AND ELECTRIC SERVICE LINES IN PLACE.
11. 2+03 CONST. CANAL TURNOUT 26'-30" R.C.P. CLASS IV SEE DETAILS SHEET 18.
12. OUTLET STRUCTURE SEE SHEET 17.
13. CONCRETE COLLAR SEE SHT. 18.
14. CITRUS TREES EXIST IN TCE AREA.
15. △1 RESERVOIR AREA

J.S. NO. 2
A = 90°
B = 30"
C = 5.1'
D = 84"
E = 1.75'
F = 2.8'
G = 3.7'
L = 4.0'

EL. R. = 995.85
EL. S. = 995.37

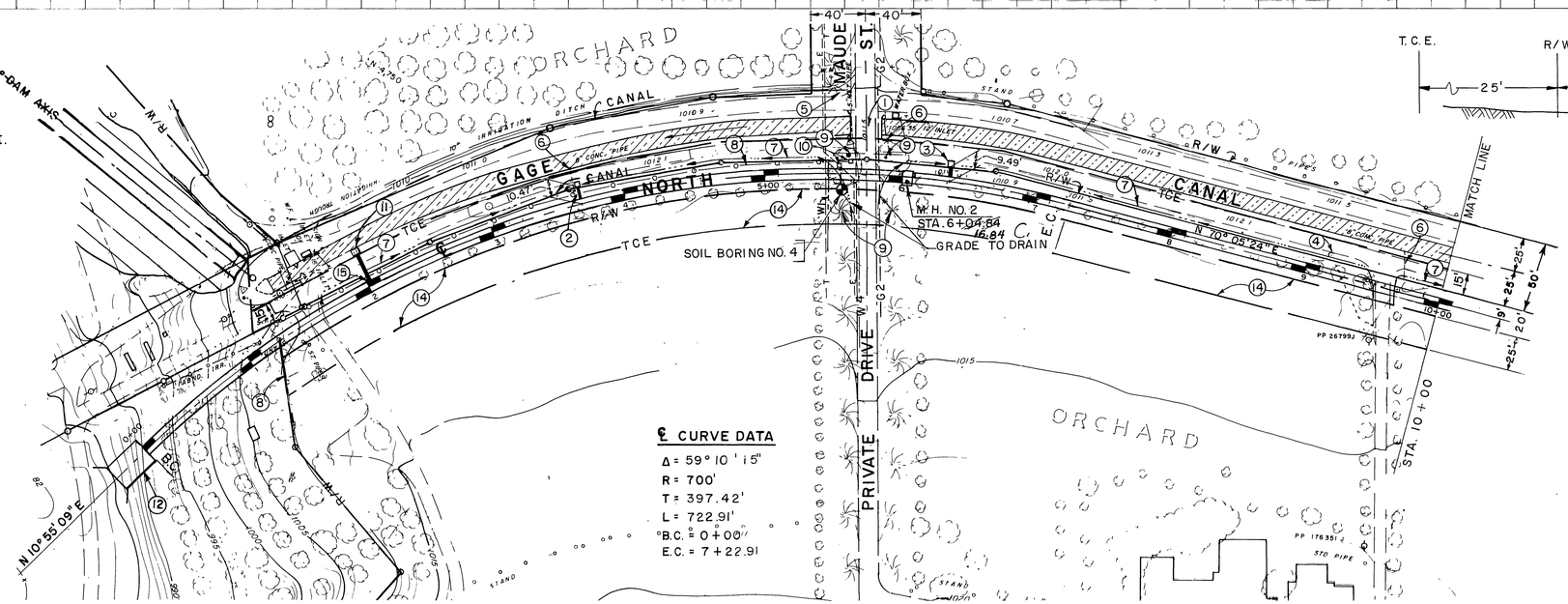

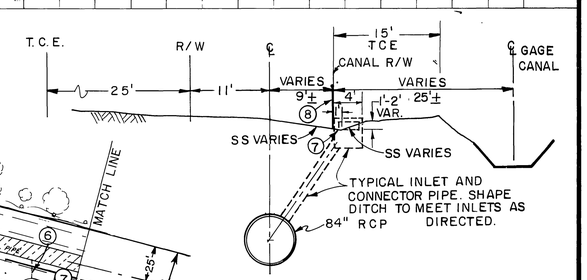

TYPICAL SECTION

10' 0 10'

PLAN

1" = 50'

50' 0 50'

CONTOUR INTERVAL = 1'

REVISIONS			
△1	APPROV. NOTE 14	F.J.P.	4-3-81
△2	MODIFIED NOTE 8	F.J.P.	4-17-81
△3	INDICATED MANHOLE	F.J.P.	4-24-81
C1	Sta. Change	J.L.H.	11-80
REF.	DESCRIPTION	APPR.	DATE

RIVERSIDE COUNTY FLOOD CONTROL AND WATER CONSERVATION DISTRICT

DESIGNED BY: J.L.H. & F.J.P.
DRAWN BY: S. Moody
DATE DRAWN: 5/81
CHECKED BY:
APPROVED BY: Kenneth L. Edwards
CHIEF ENGINEER R.E. NO. 12400
DATE: 5-15-81

MARY STREET
NORTH LATERAL
STA. 0+00 TO STA. 10+00

1970 STORM DRAIN BOND ISSUE PROJECT NO. 13

INDEX UP D448

PROJECT NO 1-0-182
DRAWING NO. 1-298
SHEET NO. 2 OF 47

AS BUILT

NOTE: CONTRACTOR SHALL PROTECT IN PLACE ALL UTILITIES CROSSING OR PARALLELING THE STORM DRAIN, UNLESS OTHERWISE NOTED.

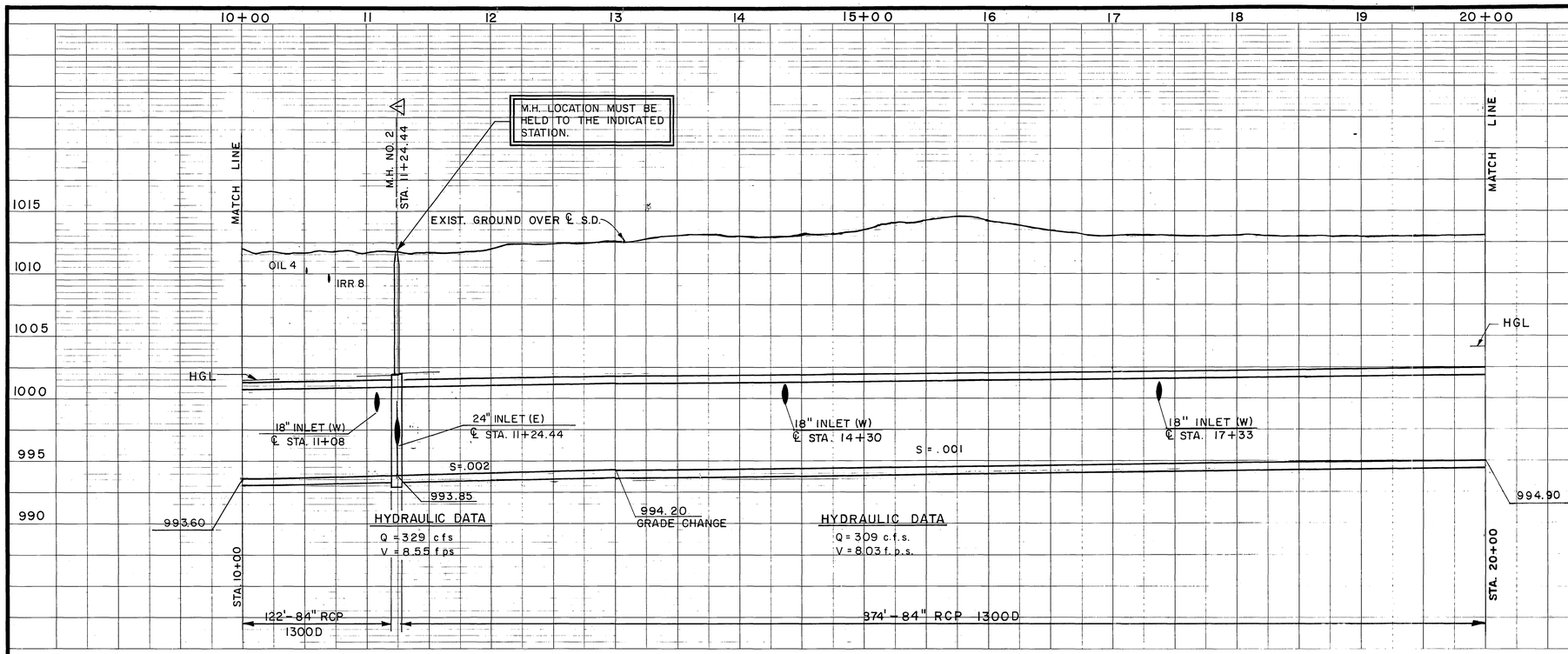

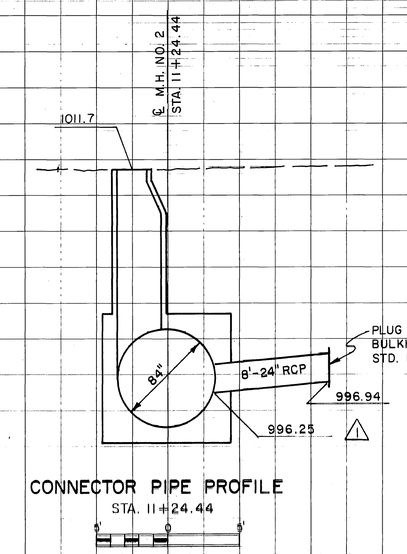

CONNECTOR PIPE PROFILE
STA. 11+24.44

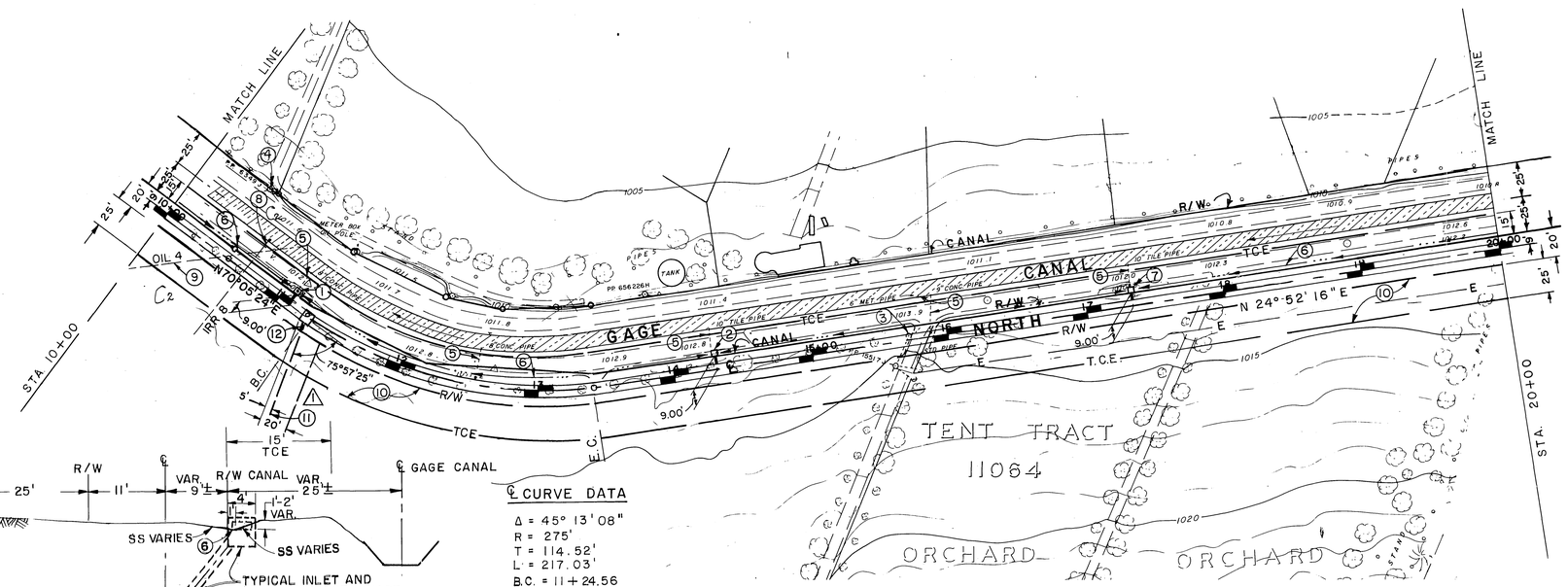

NOTES:

1. 11+08 CONC. DROP INLET. TOP EL. = 1012.00 V=5', INLET 2 SIDES, 12'-18" RCP CLASS III SEE PROFILE SHT. 14.
2. 14+30 CONC. DROP INLET. TOP EL. = 1012.5 V=5', INLET 2 SIDES, 12'-18" RCP CLASS III. SEE PROFILE SHEET 14.
3. ANCHOR & GUY FOR P.P. 15517J TO BE RELOCATED BY OTHERS PRIOR TO CONST.
4. TBM- SET RR SPIKE IN PP # 6349J ± 400' N. OF MAUDE ST. WEST. SIDE OF CANAL EL. 1010.96
5. REMOVE OR CUT AND PLUG EXISTING DRAIN AS DIRECTED.
6. CONSTRUCT TRIANGULAR GRADED DITCH AS SHOWN.
7. 17+33 CONC. DROP INLET. TOP EL. = 1012.00 V=5', INLET 2 SIDES, 12'-18" RCP CLASS III. SEE PROFILE SHT. 14.

C1 (6) ~~8" CONC. IRRIG. RETURN LINE PROTECT IN PLACE.~~ Found No IRR 8

C1 (9) ~~ABND 4" OIL LINE. REMOVE INTERFERING PORTIONS & PLUG~~ Found 4" Oil Line

10. CITRUS TREES EXIST IN TCE AREA.

⚠ 11. FUTURE STORM DRAIN AND EASEMENT BY OTHERS.

⚠ 12. 11+24.44 CONSTRUCT STUB 8'-24" RCP CLASS III, SEE PROFILE THIS SHEET.

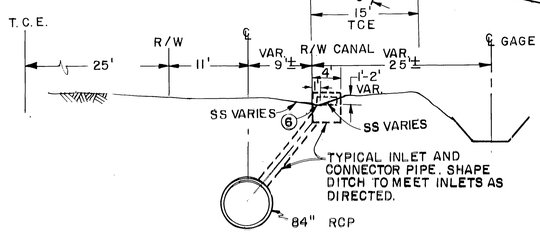

TYPICAL SECTION

10' 0 10'

℄ CURVE DATA

Δ = 45° 13' 08"
R = 275'
T = 114.52'
L = 217.03'
B.C. = 11+24.56
E.C. = 13+41.59

PLAN

1" = 50'

50' 0 50'

CONTOUR INTERVAL = 1'

REVISIONS			
⚠	Added M.H. & 24" RCP Stub	F.J.P.	6-29-81
C2	Changes See Notes ⑥ & ⑨	JDS	11-82
REF.	DESCRIPTION	APPR.	DATE

AS BUILT

RIVERSIDE COUNTY FLOOD CONTROL AND WATER CONSERVATION DISTRICT

DESIGNED BY: J.L.H. & F.J.P.
DRAWN BY: S. Moody
DATE DRAWN: 5/81
CHECKED BY: MLL

APPROVED BY: Kenneth L. Schroeder
CHIEF ENGINEER R.E. NO. 12400
DATE: 5-15-81

MARY STREET

NORTH LATERAL

STA. 10+00 TO STA. 20+00

1970 STORM DRAIN BOND ISSUE PROJECT NO. 13

INDEX 45

PROJECT NO. 1-0-182

DRAWING NO. 1-298

SHEET NO. 3 OF 47

D-445

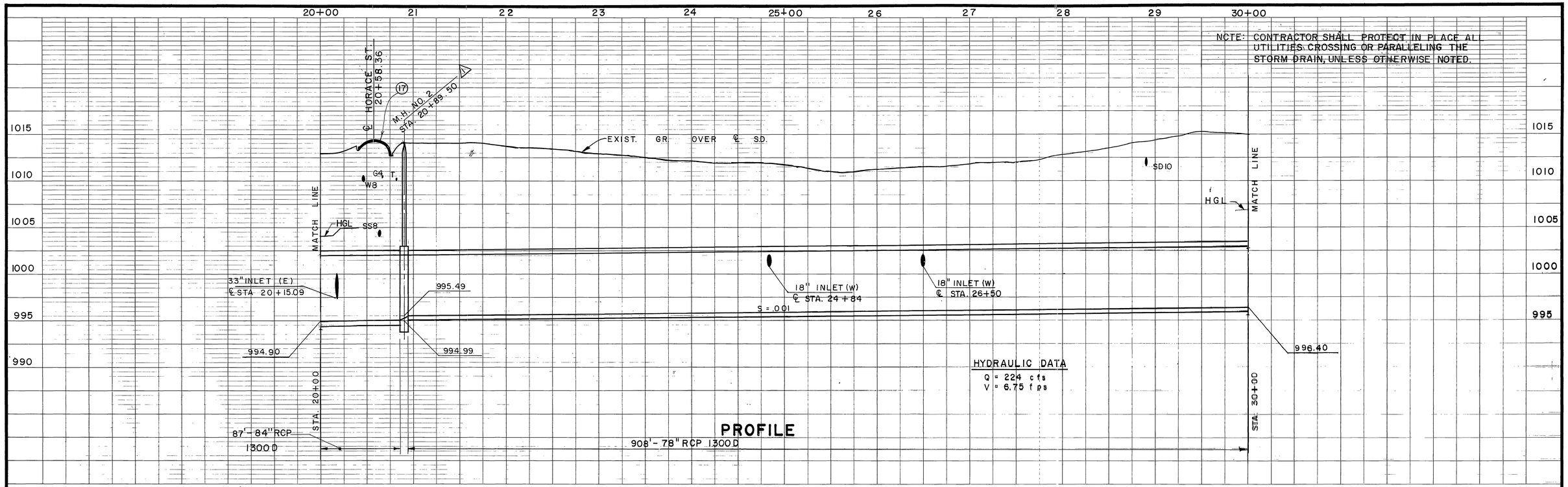

NOTES:

1. TBM - CHISLED BOX SOUTH END OF SIDEWALK EASTERLY SIDE OF HORACE ST. AT GAGE CANAL. EL. 1012.60
2. Δ = 6° 30'36"
   R = 2500'
   T = 142.18'
   L = 284.04'
   BC = 21+34.54
   EC = 24+18.58
3. Δ = 6° 41'08"
   R = 500'
   T = 29.20'
   L = 58.34'
   BC = 28+73.23
   EC = 29+31.57
4. PROTECT PRIVATE SD 10 IN PLACE. DRAIN TO BE ABANDONED DURING CONST. OF TRACT 10,772.
5. 24+84 CONC. DROP INLET TOP EL. 1011.0, V = 5', INLET TWO SIDES 10'-18" RCP CLASS III, SEE PROFILE SHT. 14
6. 26+50 CONC. DROP INLET TOP EL. 1011.0, V = 5', INLET TWO SIDES 10'-18" RCP CL. III, SEE PROFILE SHT. 14
7. REMOVE OR CUT AND PLUG EXISTING DRAINS AS DIRECTED.
8. CONSTRUCT TRIANGULAR GRADED DITCH TO DRAIN AS SHOWN.
9. SEE SHEET 5 FOR TYPICAL DITCH SECTION
10. REMOVE & REPLACE OR PROTECT WOODEN GATE IN PLACE.
11. REMOVE & REPLACE EXISTING WOOD & CHAIN LINK FENCES. EXISTING LANDSCAPING, WATER LINES AND SPRINKLERS TO BE SALVAGED BY OTHERS PRIOR TO CONSTRUCTION. APPROX. STA. 20+70 TO 28+95
12. CUT AND PLUG IRR. LINE AS DIRECTED.
13. REMOVE & REPLACE STEEL GUARDRAIL AS REQD.
14. CITRUS TREES EXIST IN TCE AREA.
15. △1 PROVIDE TEMPORARY 6' CHAIN LINK FENCING ALONG TCE LINE DURING CONSTRUCTION. APPROX. STA. 20+82 TO 28+63. SEE SPECIFICATIONS FOR TIME LIMITATIONS.
16. △2 CONTRACTOR SHALL EXERCISE CAUTION IN VICINITY OF POOL.
17. RESURFACING SHALL BE 3" AC OVER 10 1/2" CLASS 3 AGG. BASE FOR HORACE ST. ONLY.
18. PROTECT TREES ON TCE LINE IN PLACE.

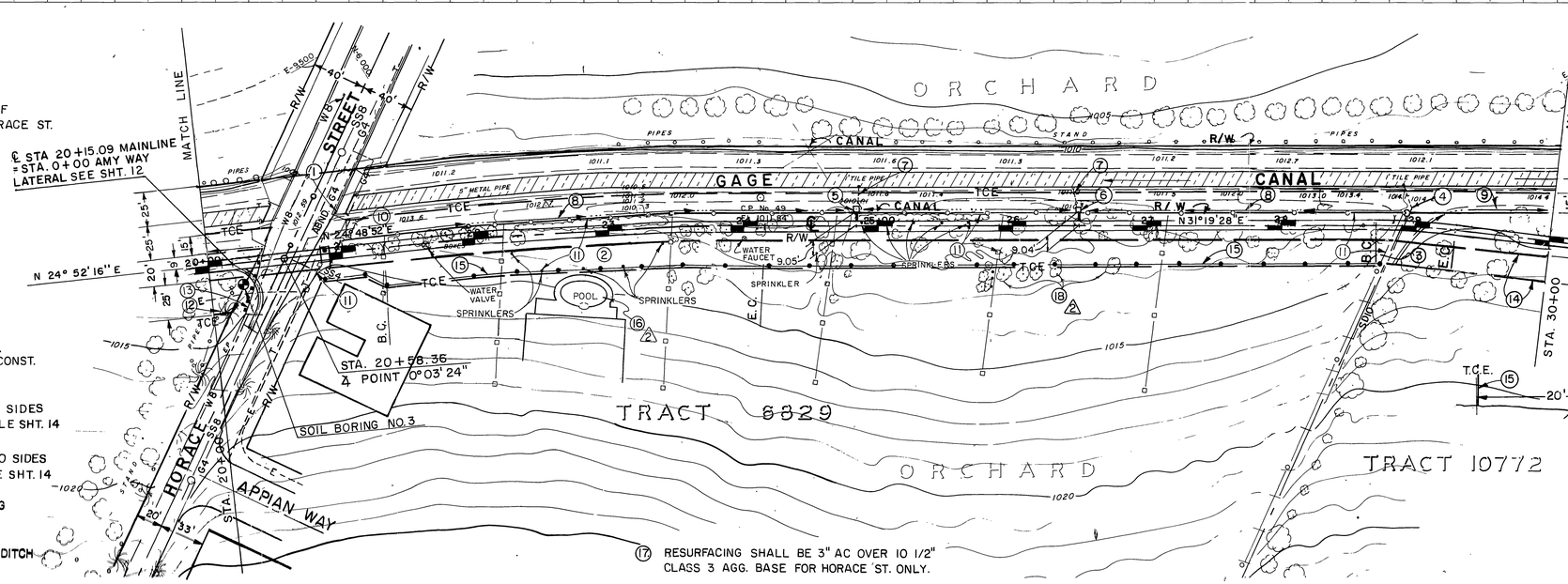

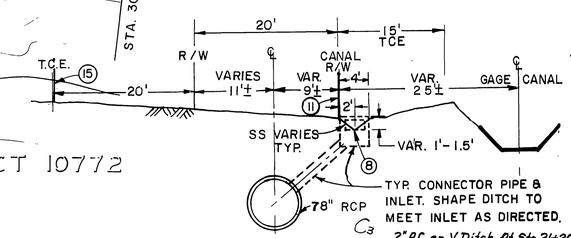

TYPICAL SECTION
STA. 21+15 TO 28+95

INDEX OF D-445

PLAN
1" = 50'
CONTOUR INTERVAL = 1'

REVISIONS			
△1	REVISED M.H. LOCATION & NOTE 15	F.J.P.	6-3-81
△2	ADDED NOTES 16, 17 & 18	F.J.P.	6-17-81
C3	Added 2" AC on V Ditch See Typ Sect	JDS	11-83
REF.	DESCRIPTION	APPR.	DATE

RIVERSIDE COUNTY FLOOD CONTROL AND WATER CONSERVATION DISTRICT

DESIGNED BY: J.L.H & F.J.P.
DRAWN BY: S. Mooney
DATE DRAWN: 5/81
CHECKED BY: [illegible]

APPROVED BY: [illegible]
CHIEF ENGINEER R.E. NO. 12400
DATE: 5-15-81

MARY STREET
NORTH LATERAL
STA. 20+00 TO STA. 30+00
1970 STORM DRAIN BOND ISSUE PROJECT NO. 13

PROJECT NO. 1-0-182
DRAWING NO. 1-298
SHEET NO. 4 OF 47

AS BUILT

NOTE: CONTRACTOR SHALL PROTECT IN PLACE ALL UTILITIES CROSSING OR PARALLELING THE STORM DRAIN, UNLESS OTHERWISE NOTED.

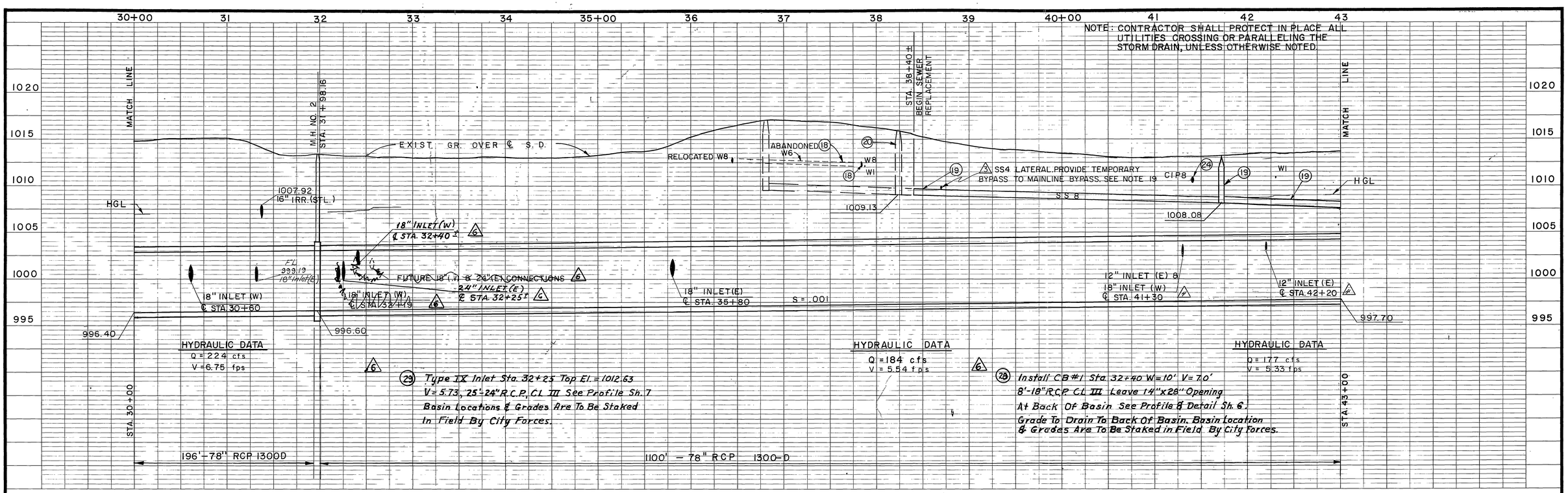

(7) STA. 30 + 60 W CONC. DROP INLET
TOP EL. 1014.0 V = 5', INLET TWO SIDES, 36'-18" RCP CL IV
REMOVE OR CUT & PLUG EXISTING PIPES AS DIRECTED AND REMOVE TIMBER HEADWALL. CONNECT BLEEDER LINE FROM PUMPHOUSE TO NEW INLET WITH 1" Ø SCHEDULE 40 PVC PIPE. SEE PROFILE SHT. 14

(8) STA. 32+19 W CONC. DROP INLET
TOP EL. 1013.0 V = 5' INLET TWO SIDES 28'-18" RCP CL IV
SEE PROFILE SHEET 14. *Inlet Deleted* (6)

(9) PROTECT EXISTING PUMPHOUSE & IRRIG. 16 IN PLACE. CONTRACTOR SHALL PROVIDE CONTINUOUS ACCESS TO PUMPHOUSE.

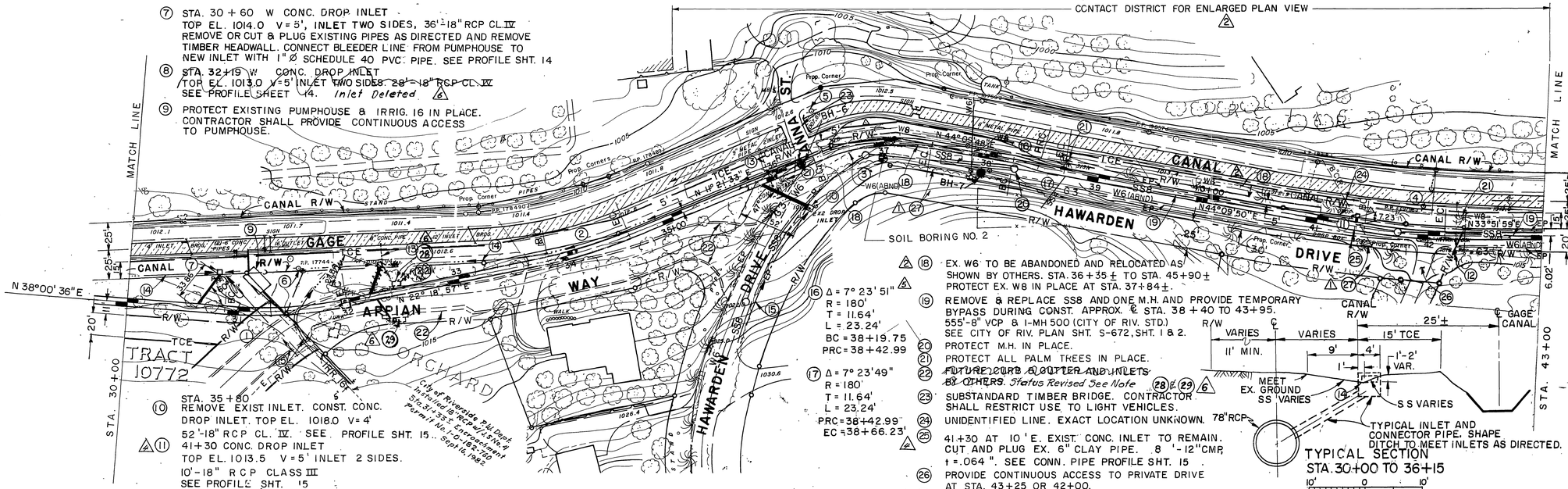

STA. 35 + 80
(10) REMOVE EXIST INLET. CONST. CONC. DROP INLET. TOP EL. 1018.0 V = 4'
52'-18" RCP CL. IV. SEE PROFILE SHT. 15

(11) 41+30 CONC. DROP INLET
TOP EL. 1013.5 V = 5' INLET 2 SIDES.
10'-18" RCP CLASS III
SEE PROFILE SHT. 15

(12) 42+20 @ 13' E. EXIST. INLET TO REMAIN.
CUT & PLUG EXIST. 9" CLAY PIPE.
8'-12" CMP, t = .064" SEE CONN. PIPE PROFILE SHT. 15

(13) REMOVE OR CUT AND PLUG EXISTING DRAINS AS DIRECTED.

(14) CONSTRUCT TRIANGULAR GRADED DITCH TO DRAIN AS SHOWN.

(15) GRADE TO DRAIN AS DIRECTED.

City of Riverside P.U. Dept. Stamp & Recall Stamp No. 4 No. 31-33 Encroachment Permit No. 10-182-500 Sept. 16, 1982

(16) Δ = 7° 23' 51"
R = 180'
T = 11.64'
L = 23.24'
BC = 38+19.75
PRC = 38+42.99

(17) Δ = 7° 23' 49"
R = 180'
T = 11.64'
L = 23.24'
PRC = 38+42.99
EC = 38+66.23'

(18) EX. W6 TO BE ABANDONED AND RELOCATED AS SHOWN BY OTHERS. STA. 36+35± TO STA. 45+90±
PROTECT EX. W8 IN PLACE AT STA. 37+84±.

(19) REMOVE & REPLACE SS8 AND ONE M.H. AND PROVIDE TEMPORARY BYPASS DURING CONST. APPROX. ℄ STA. 38 + 40 TO 43+95.
555'-8" VCP & 1-MH 500 (CITY OF RIV. STD.)
SEE CITY OF RIV. PLAN SHT. S-672, SHT. 1 & 2.

(20) PROTECT M.H. IN PLACE.

(21) PROTECT ALL PALM TREES IN PLACE.

(22) ~~FUTURE CURB & GUTTER AND INLETS BY OTHERS.~~ *Status Revised See Note* (28) & (29) (6)

(23) SUBSTANDARD TIMBER BRIDGE. CONTRACTOR SHALL RESTRICT USE TO LIGHT VEHICLES.

(24) UNIDENTIFIED LINE. EXACT LOCATION UNKNOWN.

(25) 41+30 AT 10' E. EXIST. CONC. INLET TO REMAIN. CUT AND PLUG EX. 6" CLAY PIPE. 8'-12" CMP, t = .064". SEE CONN. PIPE PROFILE SHT. 15

(26) PROVIDE CONTINUOUS ACCESS TO PRIVATE DRIVE AT STA. 43+25 OR 42+00.

(27) PROTECT TREES & SHRUBS IN R/W EASTERLY SIDE STA. 36+00 TO 42+25.

℄ CURVE DATA

(1) Δ = 15° 41' 39"
R = 400'
T = 55.13'
L = 109.57'
B.C. = 30+90.24
E.C. = 31+99.81

(2) Δ = 10° 57' 24"
R = 400'
T = 38.36'
L = 76.49'
B.C. = 33+82.19
E.C. = 34+58.68

(3) Δ = 32° 48' 15"
R = 180'
T = 52.98'
L = 103.06'
B.C. = 36+42.67
E.C. = 37+45.73

(4) Δ = 10° 17' 51"
R = 400'
T = 36.04'
L = 71.89'
B.C. = 41+39.33
E.C. = 42+11.22

(5) TBM RR SPIKE IN PP#33318
EL. 1013.05

(6) TBM RCFC & WCD TAG IN PP#17-7441J
EL. 1013.86

INDEX OF D446

CITY OF RIVERSIDE
DOMESTIC SYSTEM
WATER SYSTEMS MANAGER — DATE

PLAN

1" = 50'
50' 0 50'
CONTOUR INTERVAL = 1'

(6) Inlet Revised, Future APPIAN WAY F.J.P. 11/16/82

REF.	DESCRIPTION	APPR.	DATE
1	Added Note 27	F.J.P.	6-3-81
2	Revised note 18 & plotted relocated W6		
	Added ref. to Sheet 20.	F.J.P.	6-18-81
3	Added SS4 and note	F.J.P.	6-18-81
4	MODIFIED INLET LOCATIONS	F.J.P.	6-25-81
5	Waterline ℄'s Per Riv. P.U. Dept	F.J.P.	7-31-81

RIVERSIDE COUNTY FLOOD CONTROL AND WATER CONSERVATION DISTRICT

DESIGNED BY: J.L.H. & F.J.P.
DRAWN BY: J. Mordy
DATE DRAWN: 5/81
CHECKED BY:
APPROVED BY: Kenneth L. Edwards
CHIEF ENGINEER R.E., NO. 12400
DATE: 5-15-81

MARY STREET
NORTH LATERAL
STA. 30+00 TO STA. 43+00
1970 STORM DRAIN BOND ISSUE PROJECT NO. 13

PROJECT NO. 1-0-182
DRAWING NO. 1-296
SHEET NO. 5 OF 47

AS BUILT (No Change)

NOTE: CONTRACTOR SHALL PROTECT IN PLACE ALL UTILITIES CROSSING OR PARALLELING THE STORM DRAIN, UNLESS OTHERWISE NOTED.

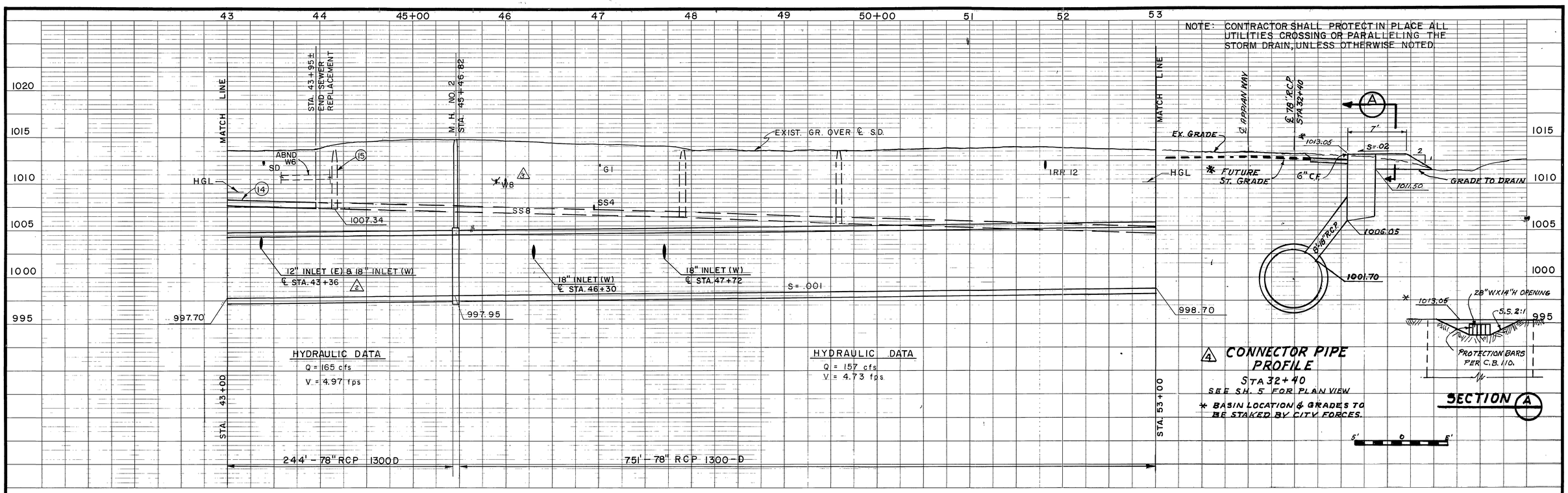

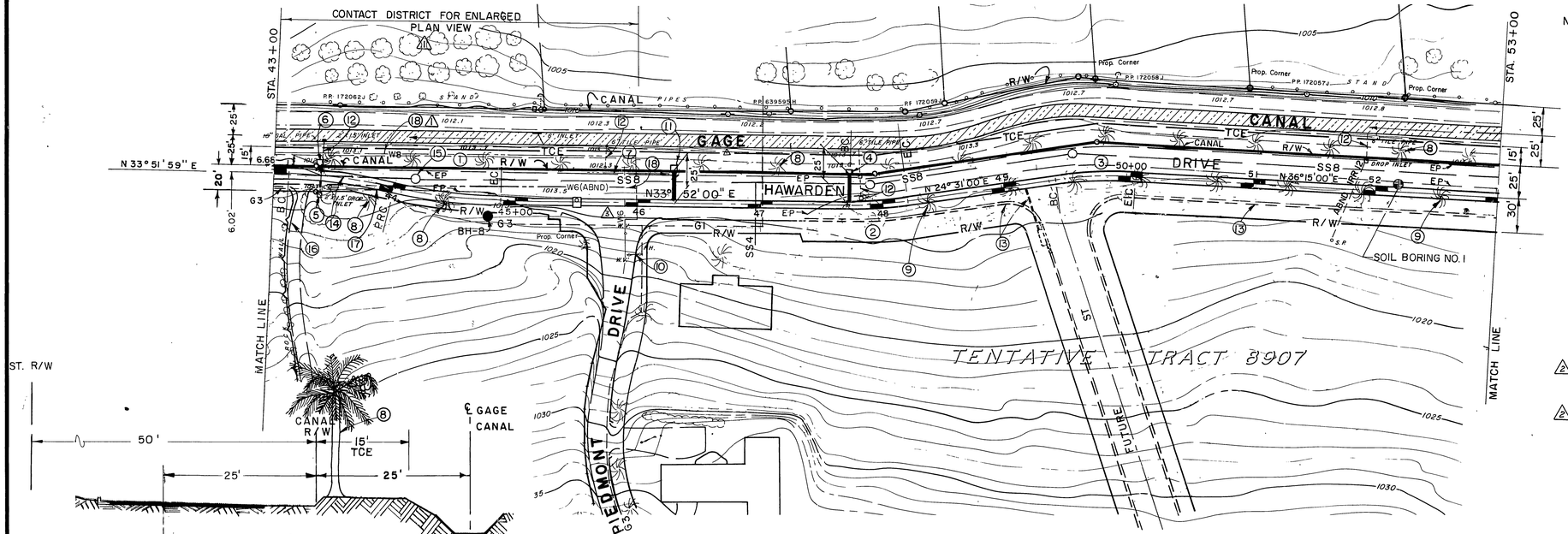

NOTES:

℄ CURVE DATA

① Δ = 12° 30' 42"
R = 400'
T = 43.85'
L = 87.35'
B.C. = 43+14.85
PRC = 44+02.20
EC = 44+89.54

② Δ = 9° 21' 00"
R = 300'
T = 24.53'
L = 48.96'
B.C. = 47+72.27
E.C = 48+21.22

③ Δ = 11° 44' 00"
R = 300'
T = 30.83'
L = 61.44'
B.C. = 49+42.74
E.C. = 50+04.18

④ 47+72 W. CONC. DROP INLET.
TOP EL. 1013.5 V = 4' INLET E. SIDE
24'-18" RCP CL. IV SEE PROFILE SHT. 15

△2 ⑤ 43+36 @ 14' E. EXIST. DROP INLET TO REMAIN.
8'-12" CMP t = .064 SEE PROFILE SHT. 15

△2 ⑥ 43 + 36 W. CONC. DROP INLET.
TOP EL. 1013.5 V = 5' INLET E. SIDE
10'-18" RCP CL. III SEE PROFILE SHT. 15

⑦ GRADE TO DRAIN AS DIRECTED.

⑧ PROTECT PALM TREES IN PLACE.

⑨ EIGHT PALM TREES TO BE RELOCATED BY OTHERS STA. 48+35 TO STA. 52+55.

⑩ T.B.M., R.C.F.C. & W.C.D. TAG IN CURB 1.5' FROM FIRE HYDRANT EL. 1018.06

⑪ 46+30 @ 25' W. CONC. DROP INLET
TOP EL. 1014.5 V = 4' INLET E. SIDE
24'-18" RCP CL. IV SEE PROFILE SHT. 15

⑫ REMOVE OR PLUG EXISTING INLETS AND PIPES AS DIRECTED.

⑬ FUTURE CURB, GUTTER AND DRAINS BY OTHERS.

⑭ REMOVE AND REPLACE SS8 AND PROVIDE TEMPORARY BYBASS DURING CONST. APPROX. ℄ STA. 38+40 TO 43+95

⑮ PROTECT M.H. IN PLACE.

⑯ PROVIDE CONTINUOUS ACCESS TO PRIVATE DRIVE AT STA. 43+25 OR 42+00.

⑰ PROTECT G3 IN PLACE.

△1 ⑱ SEE NOTE NO. 18, SHEET NO. 5.

CITY OF RIVERSIDE
DOMESTIC SYSTEM
WATER SYSTEMS MANAGER — DATE

PLAN
1" = 50'
50' 0 50'
CONTOUR INTERVAL = 1'

REVISIONS		
△1 Added ref. to Sheet 20. Added note 18 and plotted WS relocation.	F.I.P.	6-18-81
△2 Modified INLET Locations	F.I.P.	6-25-81
△3 Water line As Per Riv. P.U. Dept.	F.I.P.	7-31-81
△4 Added Sta. 32+40 Pipe Profile	F.I.P.	11-13-81
No Change		
REF.	DESCRIPTION	APPR. DATE

RIVERSIDE COUNTY FLOOD CONTROL AND WATER CONSERVATION DISTRICT

DESIGNED BY: J.L.H. & S.S.
DRAWN BY: S. Moody
DATE DRAWN: 5/81
CHECKED BY:
APPROVED BY: Kenneth L. Lawson
CHIEF ENGINEER R.E. NO. 12400
DATE: 5-15-81

MARY STREET
NORTH LATERAL
STA. 42+75 TO STA. 53+00
1970 STORM DRAIN BOND ISSUE PROJECT NO. 13

INDEX 6

PROJECT NO. 1-0-102
DRAWING NO. 1-298
SHEET NO. 6 OF 47

AS BUILT

D-445

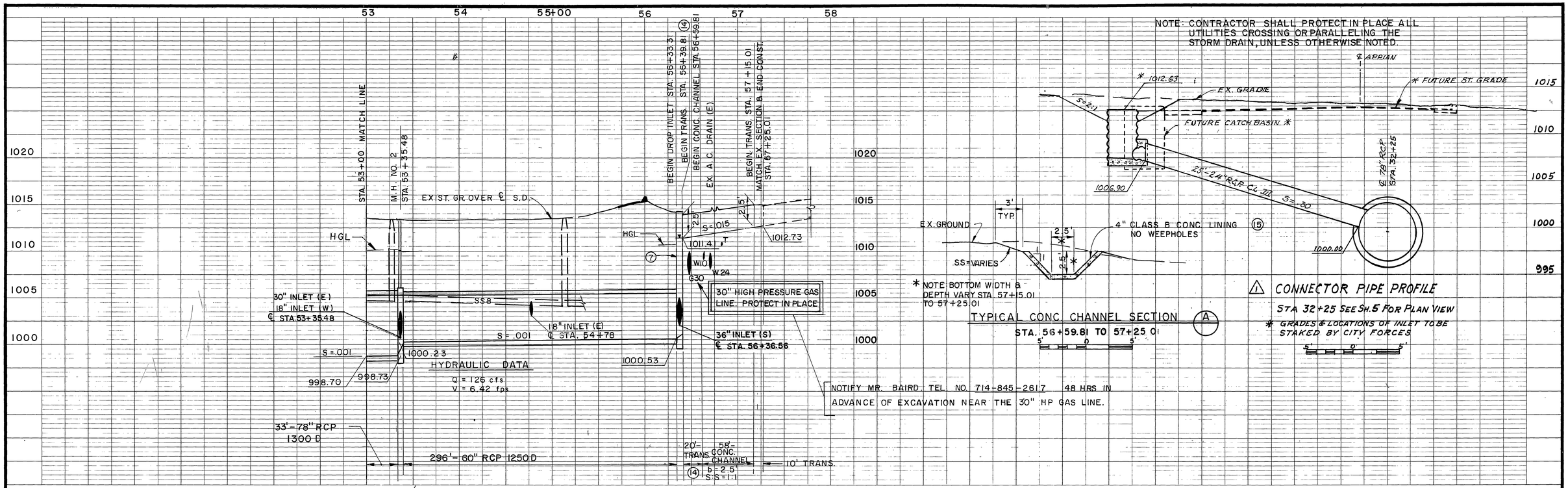

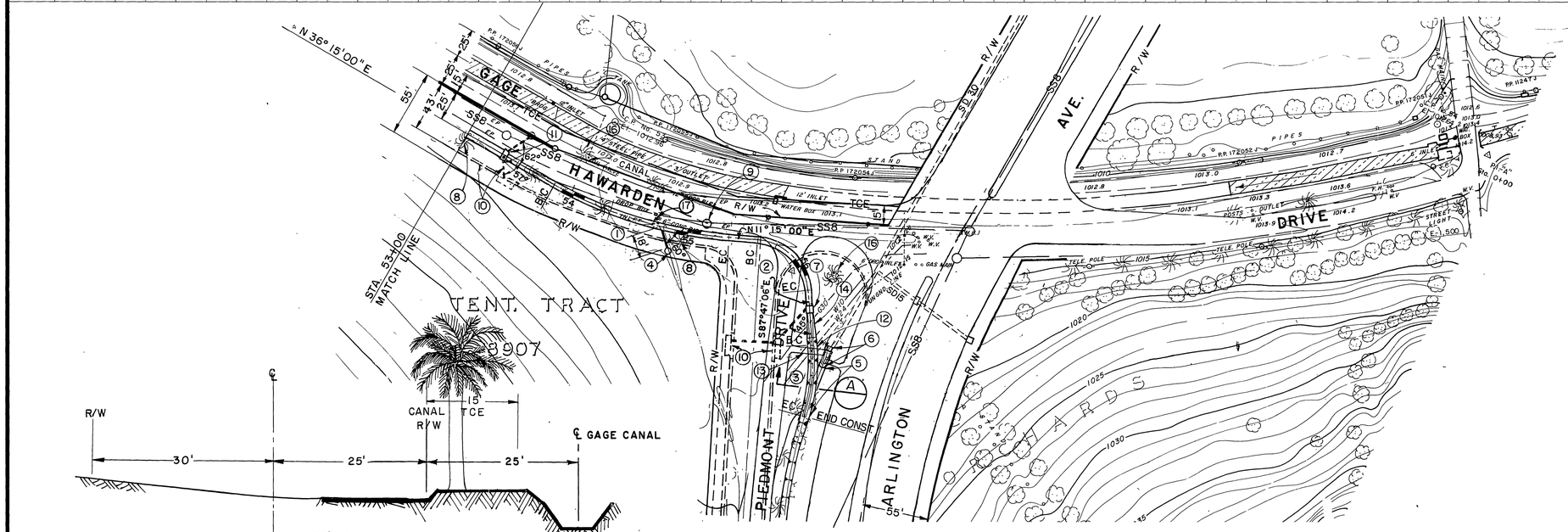

SECTION AT STA. 53+70

10' 0 10'

PLAN

1" = 50'

50' 0 50'

CONTOUR INTERVAL = 1'

NOTES:

1. Δ = 25° 00' 00"
   R = 350'
   T = 77.59'
   L = 152.72'
   BC = 53+82.12
   EC = 55+34.83
2. Δ = 80° 57' 54"
   R = 45'
   T = 38.41'
   L = 63.59'
   BC = 55+59.54
   EC = 56+23.13
3. Δ = 21° 30' 00"
   R = 158.00'
   T = 30.00'
   L = 59.29'
   BC = 56+65.72
   EC = 57+25.01
4. TYPE IX INLET STA. 54+78, V=5' PLUG EXISTING DRAIN AS DIRECTED.
   16'-18" RCP CL. III
   SEE CONNECTOR PIPE PROFILE SHEET 15.
5. REMOVE EXISTING LINING AND BACKFILL
6. PROTECT EX. DROP INLET, CONC. CHANNEL & A.C. DOWN DRAIN.
7. CONST. CONC. DROP INLET ℄ STA. 56+36.56. CONST. STUB FOR FUTURE CONNECTOR PIPE.
   8'-36" RCP 1150-D (E).
   SEE DETAILS SHEET 19.
8. FOUR PALM TREES TO BE RELOCATED BY OTHERS, STA. 53+00 TO STA. 55+00.
9. PROTECT M.H. IN PLACE.
10. FUTURE CURB, GUTTER & DRAINS BY OTHERS.
11. CONST. STUBS @ STA. 53+35.48 FOR FUTURE CONNECTOR PIPES.
    8'-30" RCP CL. IV (E) &
    8'-18" RCP CL. III (W)
    SEE PROFILE SHEET 15.
12. REMOVE EX. AC DRAIN.
13. EX. AC DRAIN TO REMAIN. CONNECT TO NEW CONC. CHANNEL.
14. SEE SHEET 19 FOR TRANS. DETAILS.
15. CONSTRUCT TRANSVERSE JOINTS 10' ON CENTERS IN SLOPES AND INVERT.
16. PROTECT PALM TREES
17. REMOVE OR CUT & PLUG EX. DRAINS AS DIRECTED.

REVISIONS			
△ Added Sta. 32+25 Pipe Profile			
No Change			
REF.	DESCRIPTION	APPR.	DATE

AS BUILT

RIVERSIDE COUNTY FLOOD CONTROL AND WATER CONSERVATION DISTRICT

DESIGNED BY: J.L.H. & S.S.
DRAWN BY: S. Moody
DATE DRAWN: 5/81
CHECKED BY:
APPROVED BY: Kenneth L. Schwada, CHIEF ENGINEER R.E. NO. 12400
DATE: 5-15-81

MARY STREET
NORTH LATERAL
STA. 53+00 TO STA. 57+25

1970 STORM DRAIN BOND ISSUE PROJECT NO. 13

INDEX UP

PROJECT NO. 1-0-182
DRAWING NO. 1-298
SHEET NO. 7 OF 47

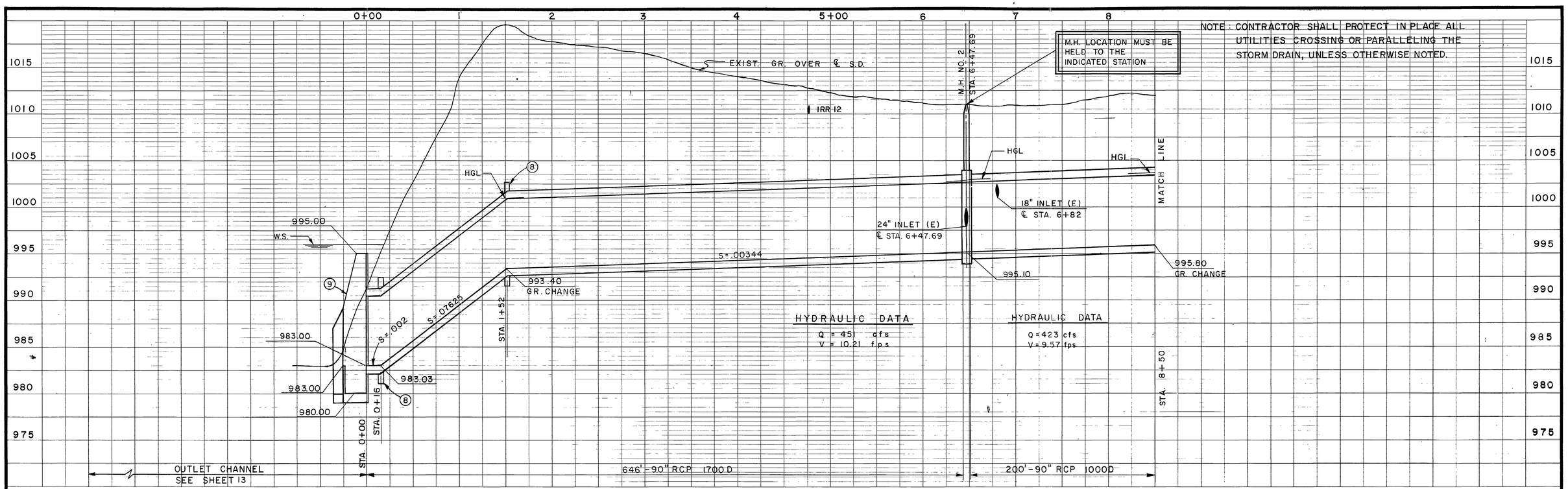

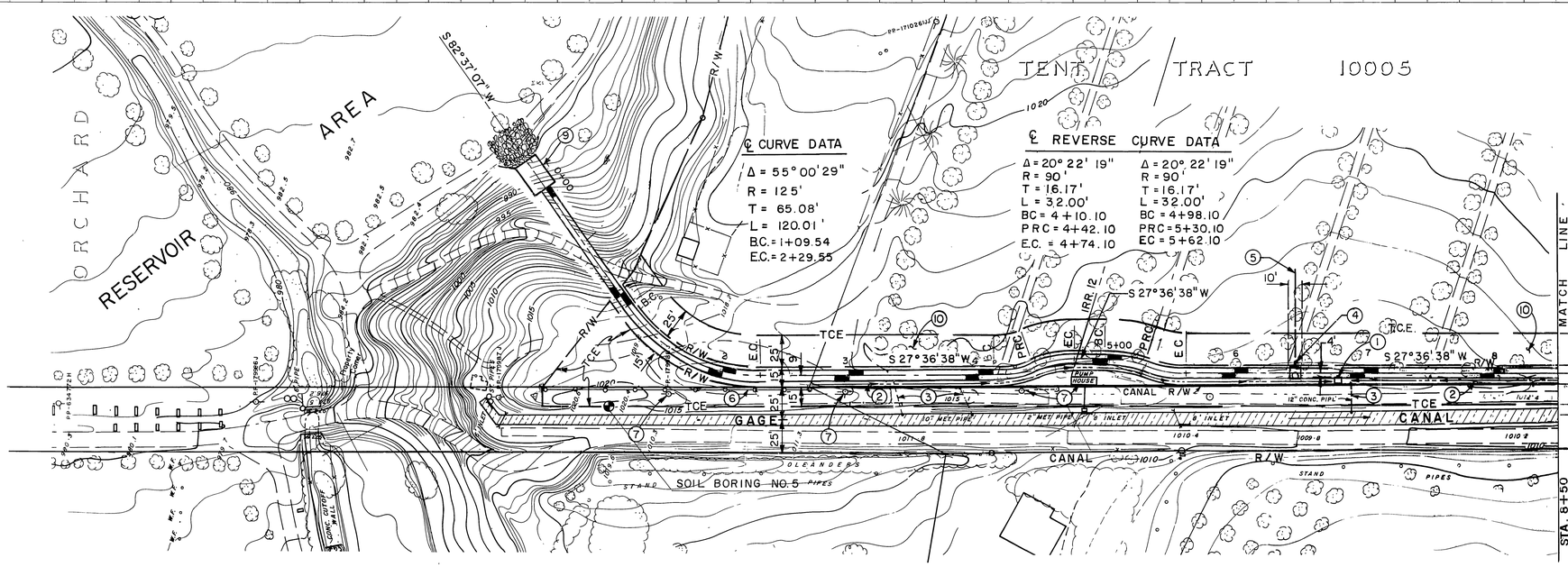

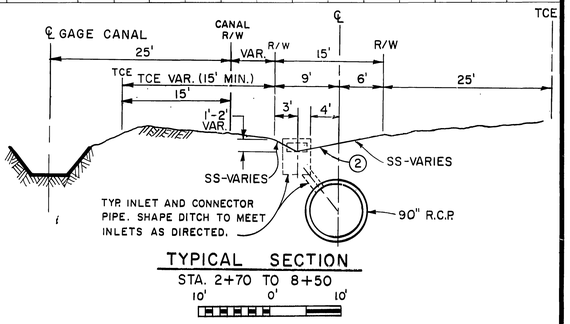

TYPICAL SECTION

STA. 2+70 TO 8+50

10' 0' 10'

NOTES

1. 6+82 CONC. DROP INLET, TOP EL. 1011.25, V=5', INLET TWO SIDES, 6'-18" RCP CLASS III, SEE PROFILE SHT. 16.
2. CONSTRUCT TRIANGULAR GRADED DITCH TO DRAIN.
3. REMOVE OR CUT AND PLUG EXISTING DRAIN AS DIRECTED.
4. 6+47.69 CONST. STUB 8'-24" RCP CLASS III, SEE PROFILE SHT. 16.
5. FUTURE STORM DRAIN AND EASEMENT BY OTHERS.
6. EXISTING 6' CHAIN LINK FENCE. REMOVE & REPLACE AS REQUIRED.
7. PROTECT PUMP HOUSE, IRR 12 LINE AND POWER POLES IN PLACE.
8. CONCRETE COLLAR. SEE SHT. 18.
9. OUTLET STRUCTURE SEE SHT. 17.
10. CITRUS TREES EXIST IN TCE AREA.

PLAN

1" = 50'

50' 0 50'

CONTOUR INTERVAL = 1'

REVISIONS			
1	MODIFY NOTE 6	F.J.P.	6-17-82
	No Change		
REF.	DESCRIPTION	APPR.	DATE

RIVERSIDE COUNTY FLOOD CONTROL AND WATER CONSERVATION DISTRICT

DESIGNED BY: J.L.H. & F.J.P.
DRAWN BY: S.M.
DATE DRAWN: 5/81
CHECKED BY:

APPROVED BY: Kenneth E. Quade
CHIEF ENGINEER R.E. NO. 12400
DATE: 5-15-81

MARY STREET
SOUTH LATERAL
STA. 0+00 TO STA. 9+00

1970 STORM DRAIN BOND ISSUE PROJECT NO. 13

INDEX

PROJECT NO. 1-0-181
DRAWING NO. 1-298
SHEET NO. 8 OF 47

AS BUILT

D-445

NOTE: CONTRACTOR SHALL PROTECT IN PLACE ALL UTILITIES CROSSING OR PARALLELING THE STORM DRAIN, UNLESS OTHERWISE NOTED.

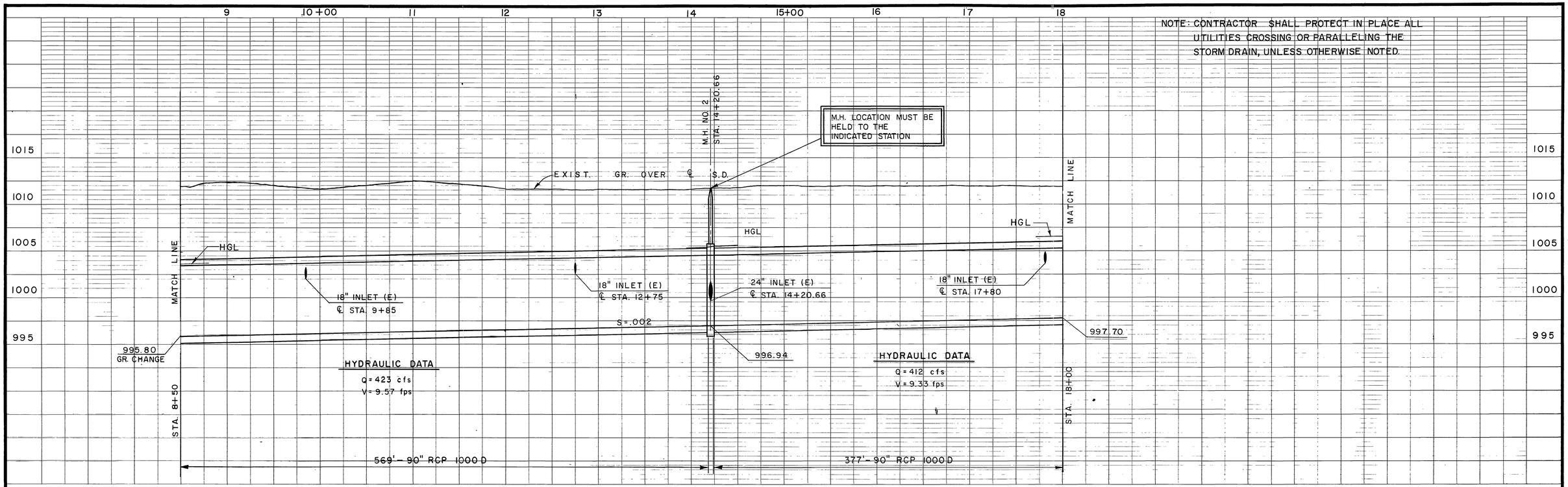

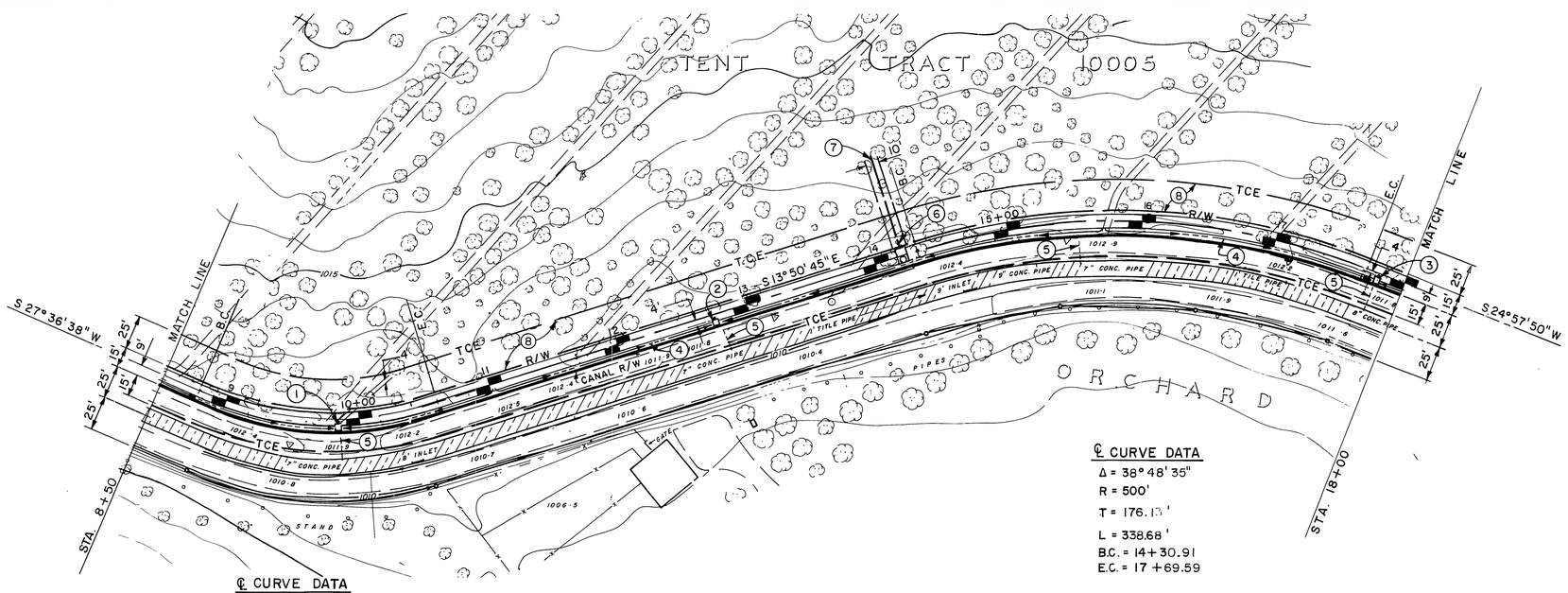

℄ CURVE DATA

Δ = 41° 27' 23"
R = 250'
T = 94.61'
L = 180.89'
BC = 8+78.71
EC = 10+59.60

℄ CURVE DATA

Δ = 38° 48' 35"
R = 500'
T = 176.13'
L = 338.68'
B.C. = 14+30.91
E.C. = 17+69.59

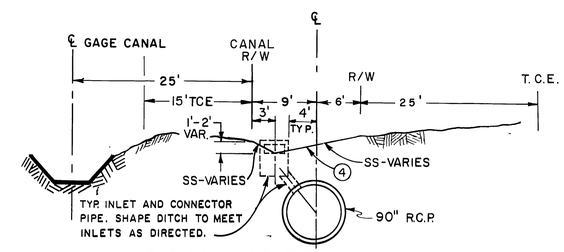

TYPICAL SECTION

10' 0 10 FEET

NOTES:

1. 9+85 CONC. DROP INLET, TOP EL. 1011.50, V=5', INLET TWO SIDES, 6'-18" RCP CLASS III, SEE PROFILE SHT. 16.
2. 12+75 CONC. DROP INLET, TOP EL. 1011.50, V=5', INLET TWO SIDES, 5'-18" RCP CLASS III, SEE PROFILE SHT. 16.
3. 17+80 CONC. DROP INLET, TOP EL. 1011.50, V=5', INLET TWO SIDES, 4'-18" RCP CLASS III, SEE PROFILE SHT. 16.
4. CONSTRUCT TRIANGULAR GRADED DITCH TO DRAIN.
5. REMOVE OR CUT AND PLUG EXISTING DRAIN AS DIRECTED.
6. 14+20.66 CONST. STUB 8'-24" RCP CLASS III, SEE PROFILE SHT. 16.
7. FUTURE STORM DRAIN AND EASEMENT BY OTHERS.
8. CITRUS TREES EXIST IN TCE AREA.

INDEX WF D-448

PLAN

1" = 50'

50' 0 50'

CONTOUR INTERVAL = 1'

REVISIONS			
REF.	DESCRIPTION	APPR.	DATE
	No Change		

RIVERSIDE COUNTY FLOOD CONTROL AND WATER CONSERVATION DISTRICT

DESIGNED BY: J.L.H. & F.J.P.
DRAWN BY: G. Moody
DATE DRAWN: 5/81
CHECKED BY: [illegible]
APPROVED BY: Kenneth L. Edwards
CHIEF ENGINEER R.E. NO. 12400
DATE: 5-15-81

MARY STREET
SOUTH LATERAL
STA. 9+00 TO STA. 18+00

1970 STORM DRAIN BOND ISSUE PROJECT NO. 13

PROJECT NO. 1-0-181
DRAWING NO. 1-298
SHEET NO. 9 OF 47

NOTE: CONTRACTOR SHALL PROTECT IN PLACE ALL UTILITIES CROSSING OR PARALLELING THE STORM DRAIN, UNLESS OTHERWISE NOTED.

M.H. LOCATION MUST BE HELD TO THE INDICATED STATION

M.H. NO. 4 B
M.H. DROP INLET (3)
STA. 21+78.71

℄ MARY ST. EXTENDED
STA. 22+60.69

℄ DA VINCI DR.
STA. 26+77.39

4'W x 1.3'H RCB (7)

EXIST. GR. OVER ℄ S.D.

HGL

MATCH LINE

36" INLET (E)
℄ STA. 21+73.34

18" INLET (W)
℄ STA. 27+44.56

18" INLET (E)
℄ STA. 27+44.56

S = .002

S = .001

997.70

998.44

998.46

999.28

SS8
W/18" CASING

HYDRAULIC DATA
Q = 412 c.f.s.
V = 9.33 f.p.s.

HYDRAULIC DATA
Q = 324 c.f.s.
V = 7.33 f.p.s.

HYDRAULIC DATA
Q = 315 cfs
V = 7.13 fps

STA. 18+00

STA. 21+71.44

STA. 21+81.04

STA. 30+00

372' — 90" RCP 1000 D

819' — 90" RCP 1000 D

1015
1010
1005
1000
995

18 19 20+00 21 22 23 24 25+00 26 27 28 29 30+00

℄ CURVE DATA LINE S-1

Δ = 48° 27' 17"
R = 22.5'
T = 10.12'
L = 19.03'
B.C. = 0+10.16
E.C. = 0+29.19

NOTES:

1. T.B.M., "X" CUT ON S. END OF FLUME HEADWALL. EL. 1013.64
2. T.B.M. NO. 2 CHISLED "X" ON N.W. CORNER OF 6 x 6 CONCRETE CANAL OVERFLOW BOX N.W. CORNER OF CANAL & MARY ST. EL. 1010.935
3. M.H. NO. 4
   A = 60°, B = 36", C = 7.8', $D_1 = D_2$ = 90"
   EL "R" = 1000.91, EL "S" = 1000.79
   CONSTRUCT MANHOLE DROP INLET AND GRADE TO DRAIN AS DIRECTED. SEE DETAILS SHT. 16 & SHT. 19.
4. J.S. NO. 2
   A = 60°, B = 18", C = 3.7', D = 36"
   E = 2.3', F = 1.2', G = 1.4', L = 3.1'
   EL "R" = 1003.08, EL "S" = 1002.74
5. C.B. NO. 1
   W = 7', V = 4', 44'-18" RCP CL. IV
   SEE PROFILE SHT. 16.
6. CONSTRUCT TRIANGULAR GRADED DITCH TO DRAIN. SEE TYPICAL SECTION SHT. 9.
7. △2 CUT EXISTING 4'W x 1.3'H RCB ℄ CANAL R/W LINE. REMOVE EASTERLY SECTION & PROTECT REMAINDER IN PLACE. GRADE SUMP TO DRAIN OVERFLOW FROM M.H. DROP INLET AS DIRECTED. RECONSTRUCT RCB HEADWALL IN KIND.
8. 27+44.48 EXISTING 4' C.B. (E) & 15" RCP CONNECTOR. CONNECT TO MAINLINE WITH 8'-18" RCP CLASS III. SEE PROFILE SHT. 16.
9. 27+44.48 (W) CONC. DROP INLET TOP ELEV. = 1012.00, V = 6'-0", 6'-18" RCP CLASS III. REMOVE INTERFERING PORTIONS OF EXISTING 15" RCP AND PLUG AS DIRECTED. SEE PROFILE SHT. 16.
10. EX. 6' CHAIN LINK FENCE. PROTECT IN PLACE OR REMOVE & REPLACE AS REQD.
11. CITRUS TREES EXIST IN TCE AREA.

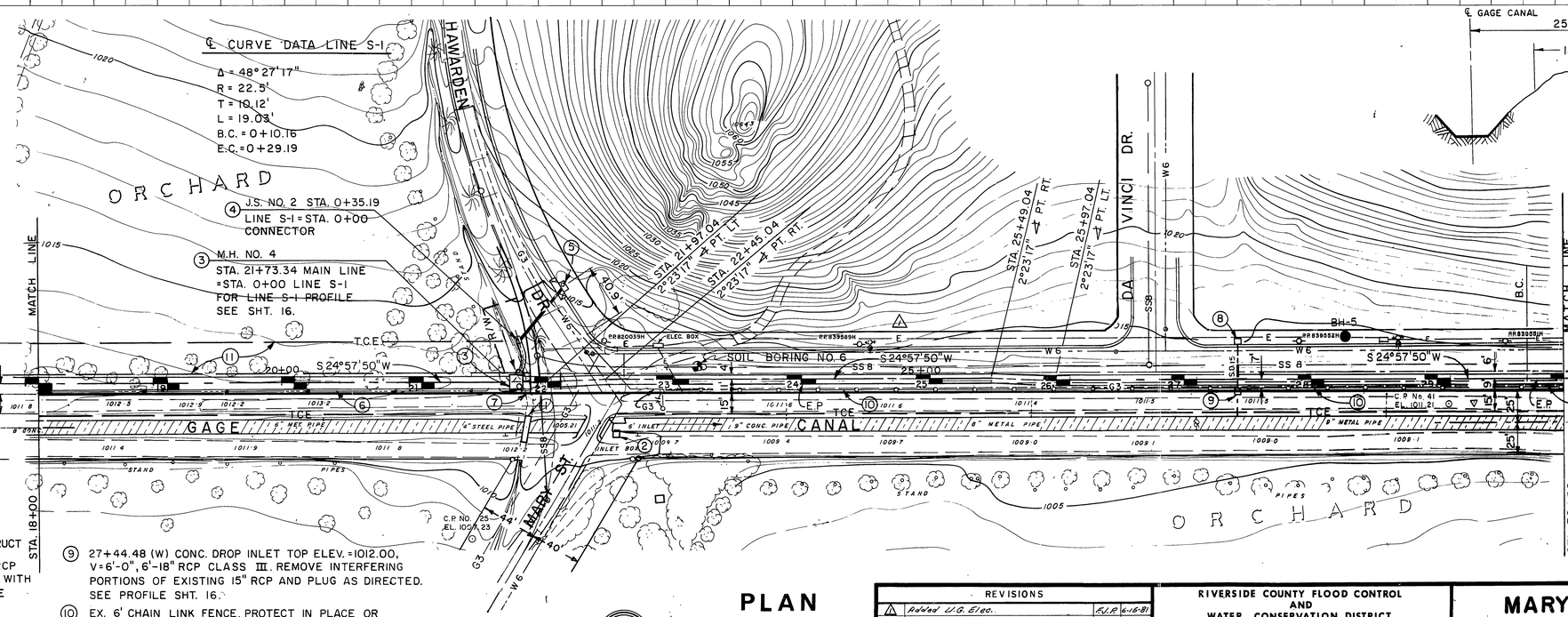

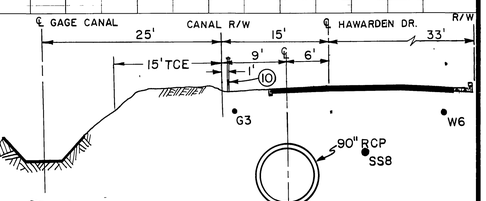

SECTION AT STA. 26+00

10' 0 10'

PLAN

1" = 50'

50' 0 50'

CONTOUR INTERVAL = 1'

REVISIONS			
△1	Added L.G. Elev.	F.J.P.	6-15-81
△2	Modified Note 7	F.J.P.	6-17-81
	No Change		
REF.	DESCRIPTION	APPR.	DATE

RIVERSIDE COUNTY FLOOD CONTROL AND WATER CONSERVATION DISTRICT

DESIGNED BY: JL H & FJP
DRAWN BY: D. Moody
DATE DRAWN: 5/81
CHECKED BY: MH

APPROVED BY: Kenneth L. Edwards
CHIEF ENGINEER R.E. NO. 12400
DATE: 5-15-81

MARY STREET
SOUTH LATERAL
STA. 18+00 TO STA. 30+00

1970 STORM DRAIN BOND ISSUE PROJECT NO. 13

PROJECT NO. 1-0-181
DRAWING NO. 1-298
SHEET NO. 10 OF 47

P-448
INDEX 45

AS BUILT

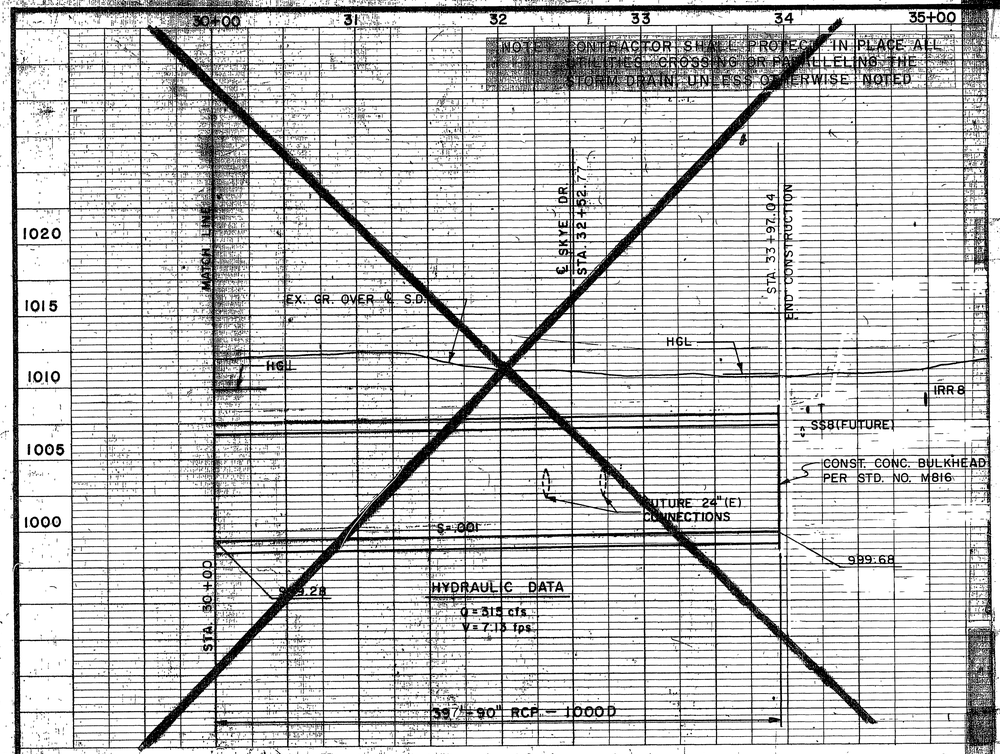

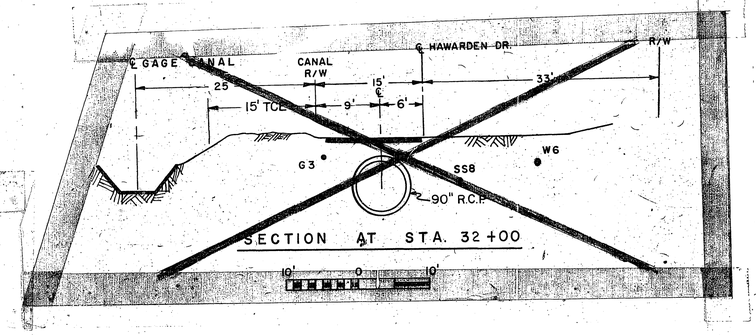

SUPERSEDED

SEE SHEET 11A FOR REVISED PLANS 2

PLAN

1" = 50'

50' 0 50'

CONTOUR INTERVAL = 1'

REVISIONS			
1	Added U.G. Elec.	F.J.P.	6-15-81
2	Added Note	F.J.P.	6-17-82
	No Change		
REF.	DESCRIPTION	APPR.	DATE

AS BUILT

RIVERSIDE COUNTY FLOOD CONTROL AND WATER CONSERVATION DISTRICT

DESIGNED BY: J.L.H. & F.J.P.
DRAWN BY: S. Moody
DATE DRAWN: 5/81
CHECKED BY: MJ
APPROVED BY: Kenneth Phillips
CHIEF ENGINEER R.E. NO. 12400
DATE: 5-15-81

MARY STREET
SOUTH LATERAL
STA. 30+00 TO STA. 33+97

1970 STORM DRAIN BOND ISSUE PROJECT NO. 13

INDEX 1-6-181

DRAWING NO. 1-298

SHEET NO. 11 OF 47

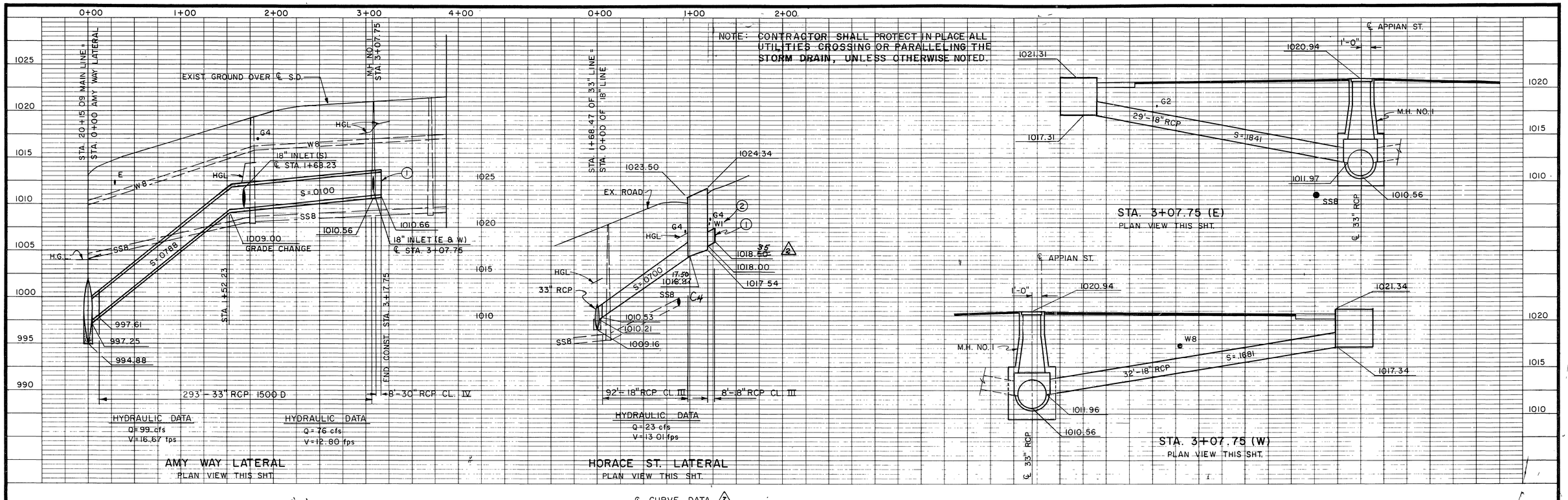

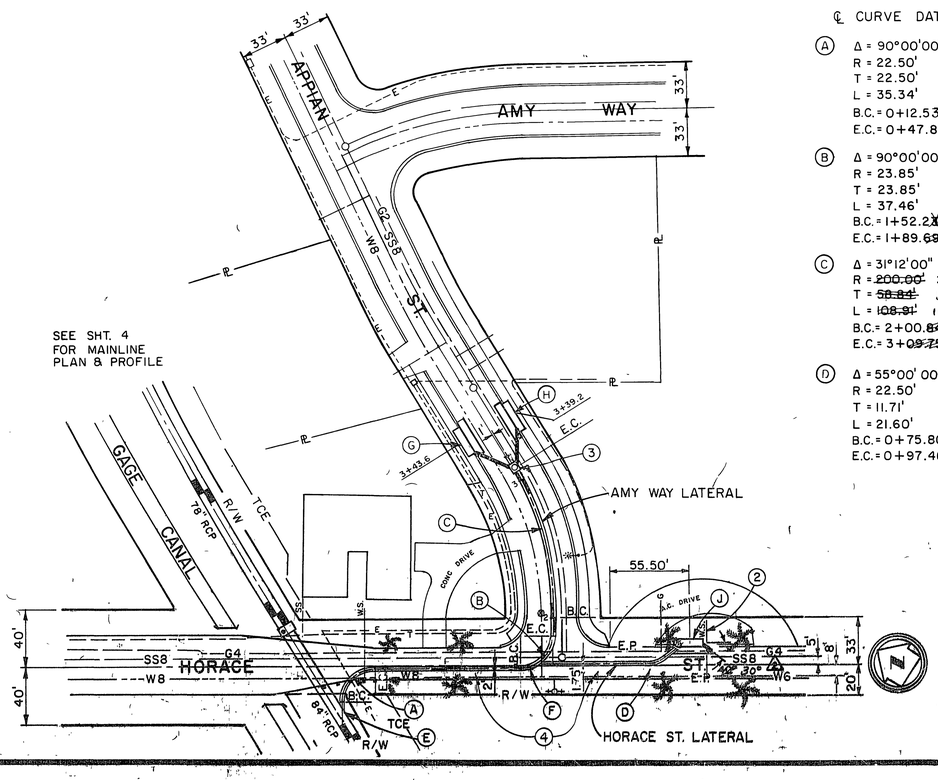

℄ CURVE DATA 3

(A) Δ = 90°00'00"
R = 22.50'
T = 22.50'
L = 35.34'
B.C. = 0+12.53
E.C. = 0+47.84 47

(B) Δ = 90°00'00"
R = 23.85'
T = 23.85'
L = 37.46'
B.C. = 1+52.22 19
E.C. = 1+89.68 75

(C) Δ = 31°12'00"
R = ~~200.00'~~ 201.00'
T = ~~58.84'~~ 56.12'
L = ~~108.91'~~ 109.45'
B.C. = 2+00.84 .90
E.C. = 3+~~09.75~~ +10.35

(D) Δ = 55°00'00"
R = 22.50'
T = 11.71'
L = 21.60'
B.C. = 0+75.80
E.C. = 0+97.40

(E) J.S. NO 2
A = 31° ~~12'~~ 09'31" 3
B = 33"
C = 12.5'
D = 84"
E = 10 9'
F = 3.20'
G = 3.72'
L = 8.1'
EL. R. = 997.61
EL. S. = 997.25

(F) J.S. NO. 2
A = 35°00'
B = 18"
C = 5.4'
D = 33"
E = 4.3'
F = 1 21'
G = 1 10'
L = 4 4'
EL. R. = 1010 57
EL. S. = 1010.21

(G) C.B. NO 1, V = 4 0', W = 21.0'
32'-18" RCP CL. IV
SEE PROFILE THIS SHT.

(H) C.B. NO 1, V = 4.0', W = 21 0'
29'-18" RCP CL. IV
SEE PROFILE THIS SHT.

(J) C.B. NO. 1, V = 6 8', W = 21.0'
92'-18" RCP CL. III
SEE PROFILE THIS SHT.

NOTES

1. CONCRETE BULKHEAD PER STANDARD M816.
2. WATER SERVICE TO BE RELOCATED BY OTHERS.
3. M.H. NO. 1, SEE STANDARD NO. M.H. 251, CONNECTOR PIPES CONFLUENCE ANGLES OF 35° EA.
4. RESURFACING SHALL BE 3" A.C. OVER 10 1/2" CLASS 3 AGG. BASE FOR HORACE ST. ONLY.

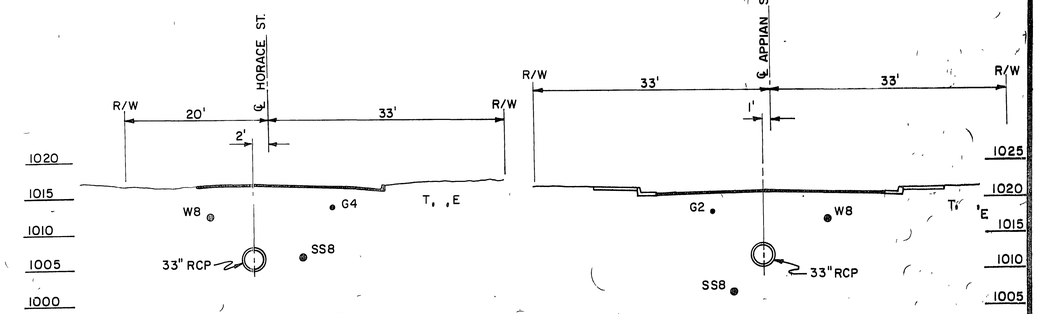

PLAN

1" = 50'

REVISIONS			
1	Added Typ. Sections	R.L.P.	8-8-81
2	Revised Alignment & Grade of Stub	R.L.P.	11-18-81
3	Corrected Data	R.L.P.	11-18-81
Cy REF.	E/Bvr. Change DESCRIPTION	R.L.P. APPR.	11-18-82 DATE

AS BUILT

RIVERSIDE COUNTY FLOOD CONTROL AND WATER CONSERVATION DISTRICT

DESIGNED BY: J.R.C.
DRAWN BY:
DATE DRAWN: 5/81
CHECKED BY:
APPROVED BY:
CHIEF ENGINEER R.E. No. 16
DATE:

MARY STREET
NORTH LATERAL

AMY WAY AND HORACE ST. LATERALS

1970 STORM DRAIN BOND ISSUE PROJECT NO. 13

INDEX 4F

PROJECT NO. 1-0-182
DRAWING NO. 1-298
SHEET NO. 12 OF 47

D-445

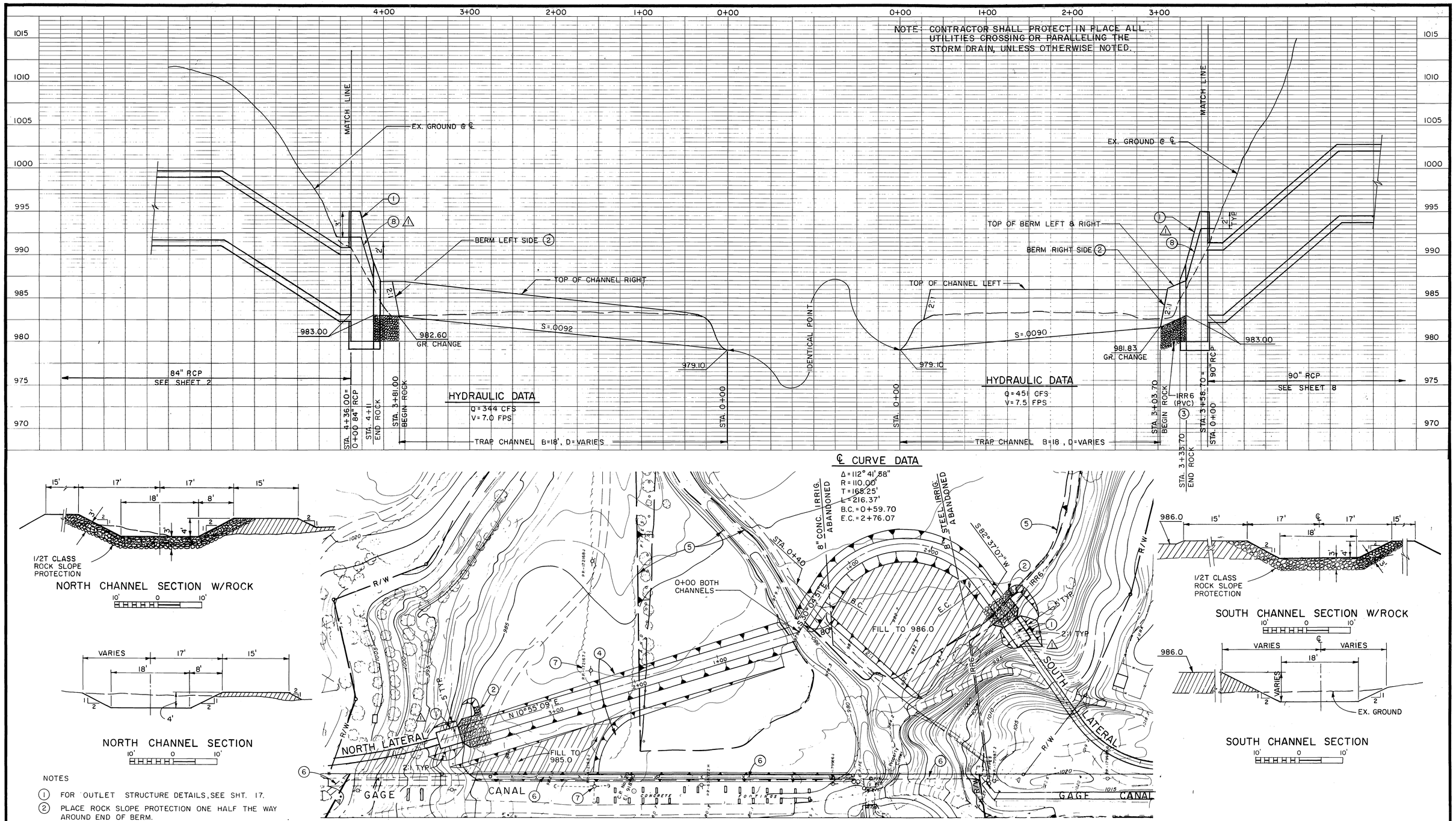

NOTES

1. FOR OUTLET STRUCTURE DETAILS, SEE SHT. 17.
2. PLACE ROCK SLOPE PROTECTION ONE HALF THE WAY AROUND END OF BERM.
3. LOWER 6" PVC IRR. LINE TO ELEV 978.0 – 20' EACH SIDE OF ℄ OUTLET STRUCTURE.
4. PROTECT EUCALYPTUS TREES IN PLACE.
5. APPROX. LIMIT OF EXCAVATION BY OTHERS. ORIGINAL GROUND MAY VARY FROM CONDITIONS SHOWN.
6. CONSTRUCTION EQUIPMENT IS NOT PERMITTED TO CROSS THE GAGE CANAL SIPHON.
7. PROTECT POWER POLES IN PLACE.
8. FINISHED GRADE AROUND STRUCTURE. △

REVISIONS			
△	ADDED NOTE 8 AND GRADING DETAILS	F.L.P.	6-3-81
	No Change		
REF.	DESCRIPTION	APPR.	DATE

AS BUILT

RIVERSIDE COUNTY FLOOD CONTROL AND WATER CONSERVATION DISTRICT

DESIGNED BY: J.R.C.
DRAWN BY: R.T.S.
DATE DRAWN: 5/81
CHECKED BY:
APPROVED BY: Kenneth L. Schaefer, CHIEF ENGINEER R.E. NO. 12400
DATE: 5-15-81

MARY STREET
LATERALS
OUTLET CHANNELS

1970 STORM DRAIN BOND ISSUE PROJECT NO. 13

INDEX WP

PROJECT NO. 1-0-181 & 182
DRAWING NO. 1-298
SHEET NO. 13 OF 47

D-445

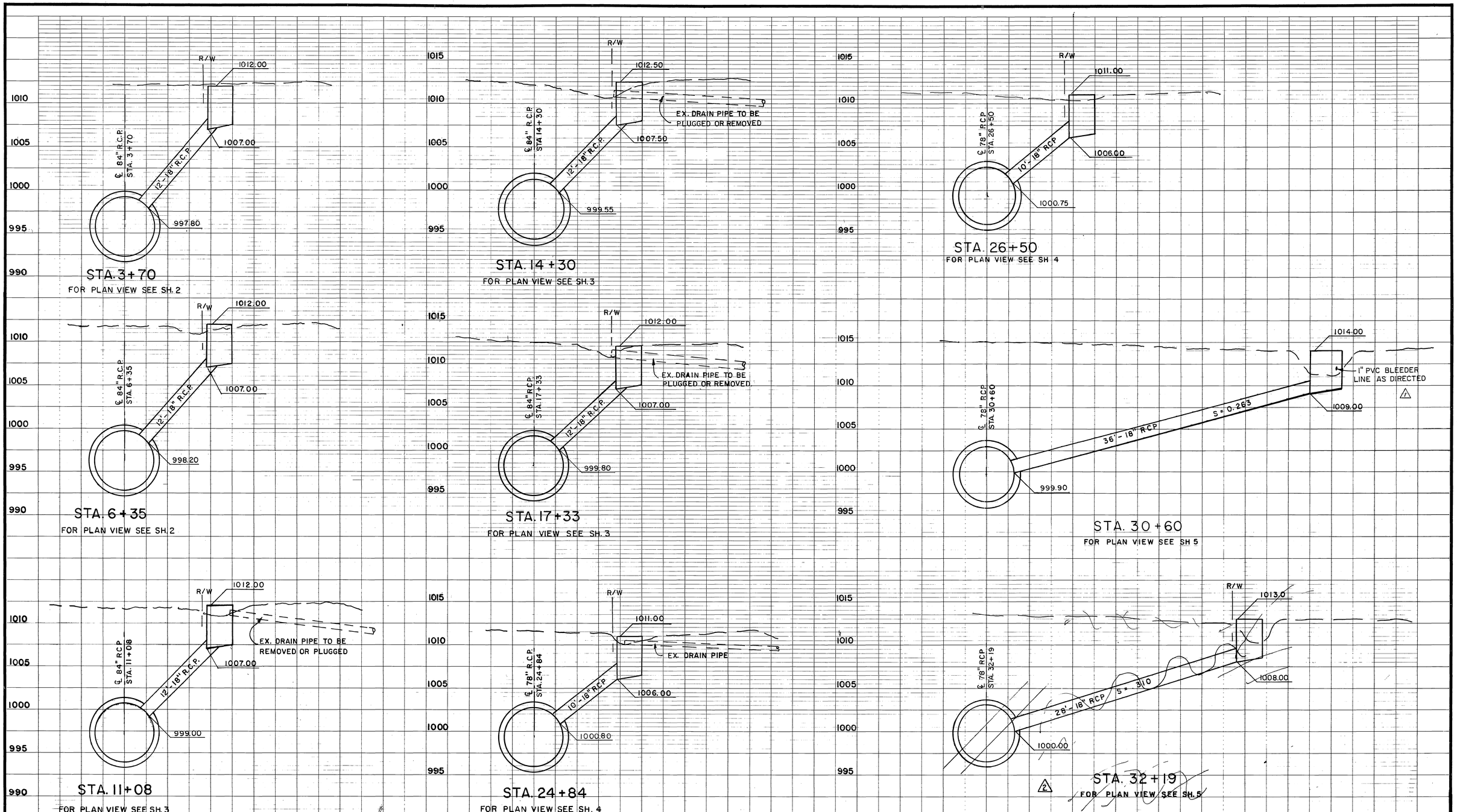

1" = 5'

5' 0 5'

REVISIONS			
1	Added Note	F.J.R.	6-10-81
2	Deleted Inlet	F.J.P.	11-16-81
	No Change		
REF.	DESCRIPTION	APPR.	DATE

AS BUILT

RIVERSIDE COUNTY FLOOD CONTROL AND WATER CONSERVATION DISTRICT

DESIGNED BY: S. S.
DRAWN BY: K.R.B.
DATE DRAWN: 5-81
CHECKED BY:
APPROVED BY: Kenneth L. Edwards, CHIEF ENGINEER R.E. NO. 12400
DATE: 5-15-81

MARY STREET
NORTH LATERAL
CONNECTOR PIPE PROFILES

1970 STORM DRAIN BOND ISSUE PROJECT NO.

INDEX LF

PROJECT NO. 1-0-182
DRAWING NO. 1-298
SHEET NO. 14 OF 47

D-445

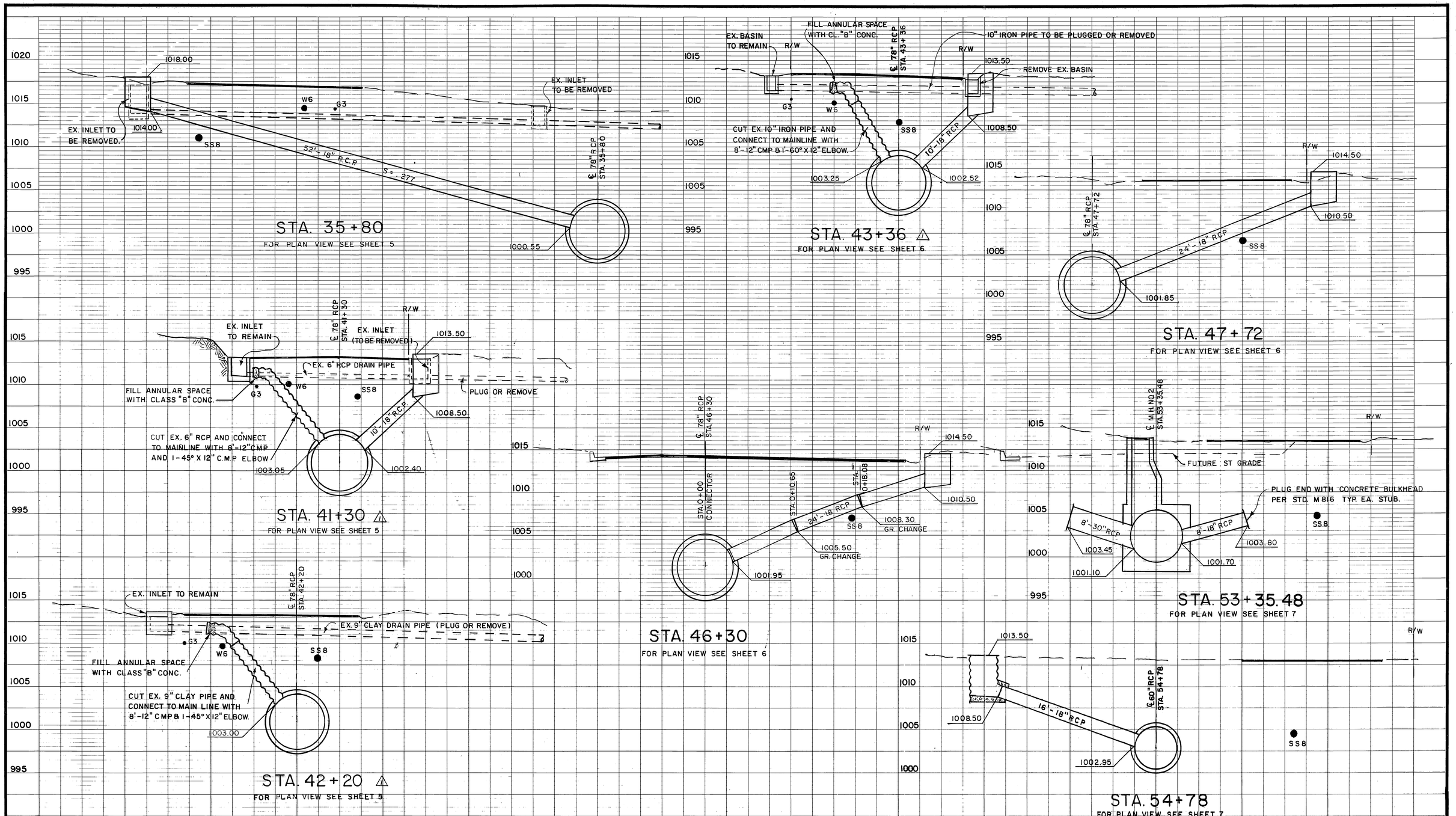

1" = 5'

5' 0 5'

REF.	REVISIONS DESCRIPTION	APPR.	DATE
1	MODIFIED INLET LOCATIONS	F.L.P.	6-25-81
	No Change		

AS BUILT

RIVERSIDE COUNTY FLOOD CONTROL AND WATER CONSERVATION DISTRICT

DESIGNED BY: S.S.
DRAWN BY: K.R.B.
DATE DRAWN: 5-81
CHECKED BY: [illegible]

APPROVED BY: [illegible] Edwards
CHIEF ENGINEER R.E. NO. 12400
DATE: 5-15-81

MARY STREET
NORTH LATERAL
CONNECTOR PIPE PROFILES

1970 STORM DRAIN BOND ISSUE PROJECT NO. 13

INDEX NE

PROJECT NO. 1-0-182
DRAWING NO. 1-298
SHEET NO. 15 OF 47

D-445

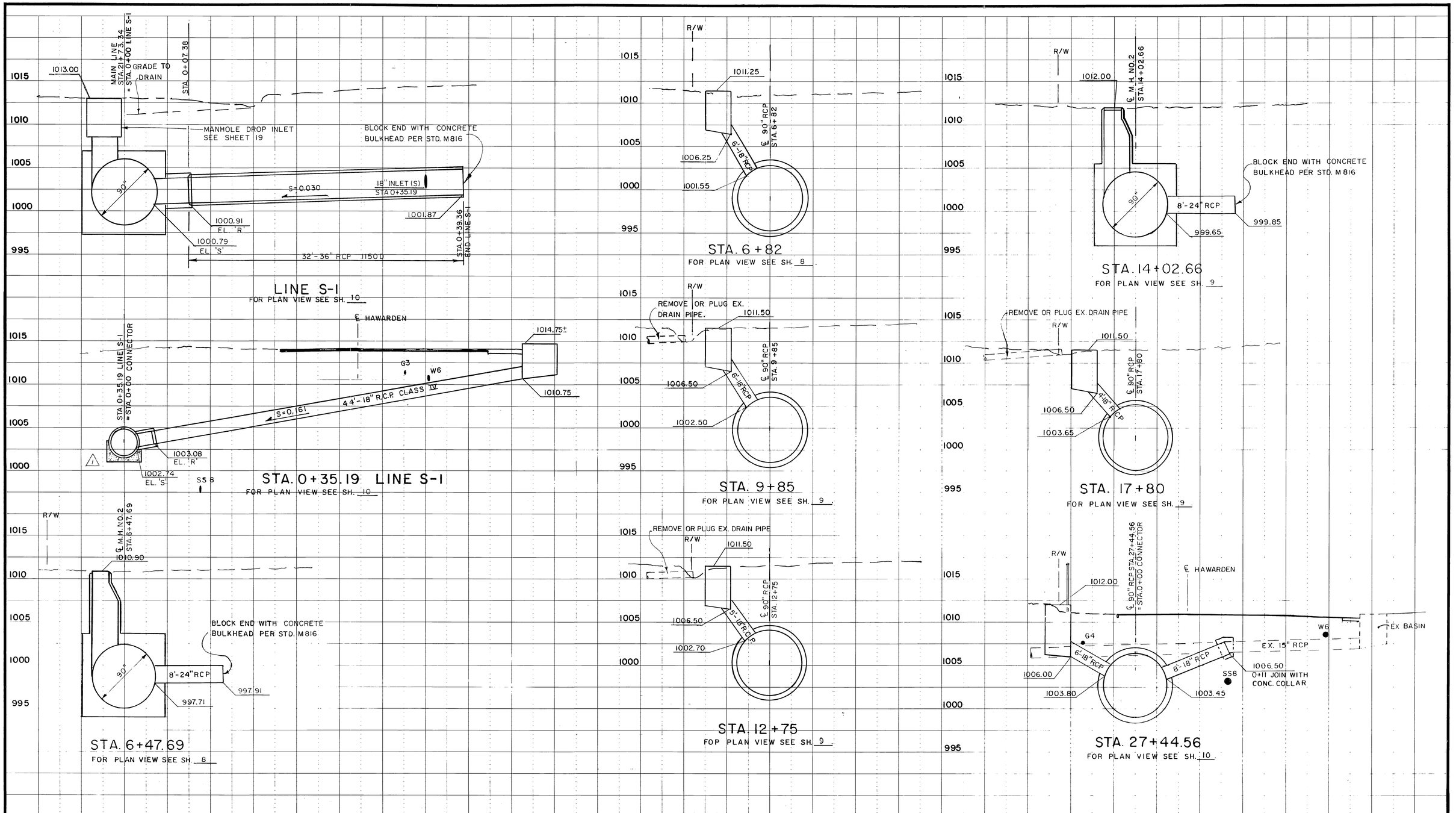

1" = 5'

5' 0 5'

REVISIONS			
1	Revised J.S. Detail	K.R.B.	6-11-81
REF.	DESCRIPTION	APPR.	DATE
	No. Change		

AS BUILT

RIVERSIDE COUNTY FLOOD CONTROL AND WATER CONSERVATION DISTRICT

DESIGNED BY: S.E.S.
DRAWN BY: K.R.B.
DATE DRAWN: 5-81
CHECKED BY:

APPROVED BY: Kenneth L. Edwards
CHIEF ENGINEER R.E. NO 12400
DATE: 5-15-81

MARY STREET SOUTH LATERAL CONNECTOR PIPE PROFILES

1970 STORM DRAIN BOND ISSUE PROJECT NO. 13

PROJECT NO. 1-0-181
DRAWING NO. 1-298
SHEET NO. 16 OF 47

INDEX 4F

D-445

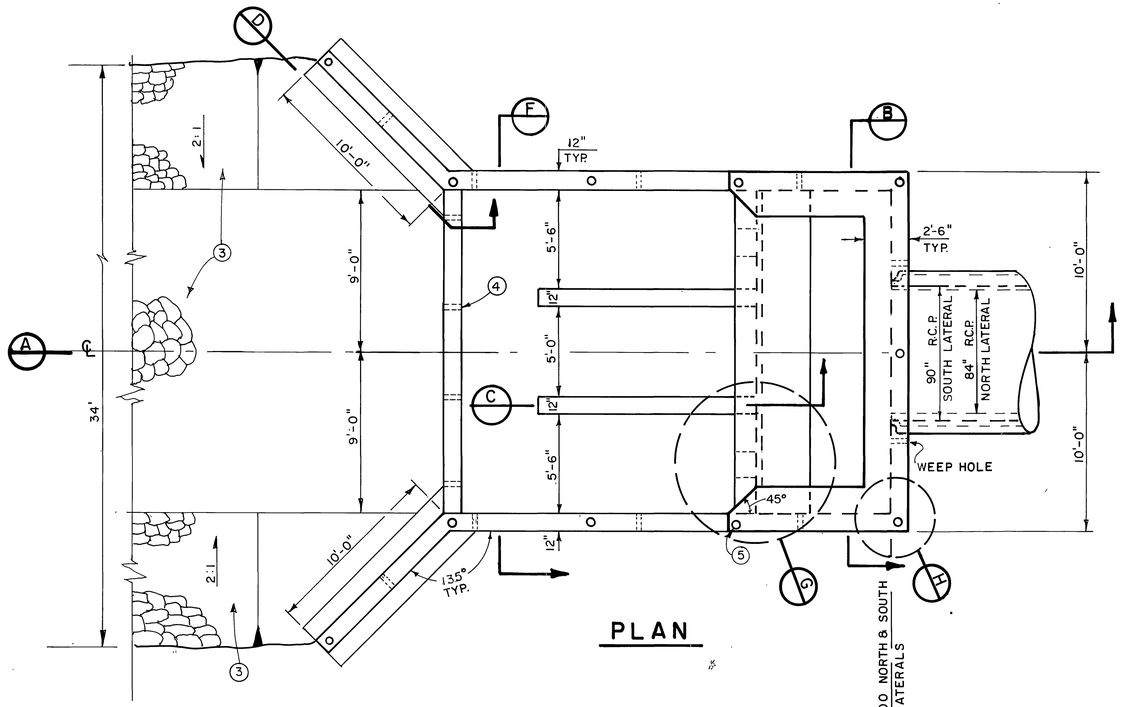

PLAN

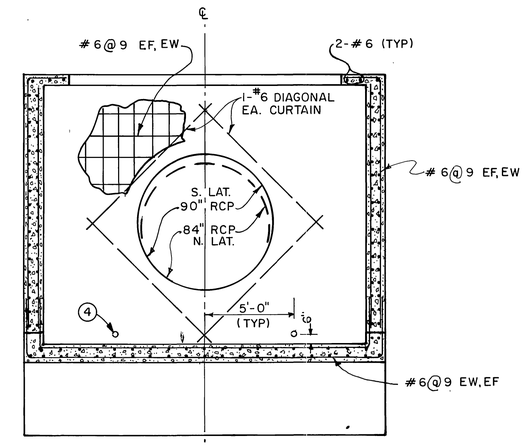

SECTION B

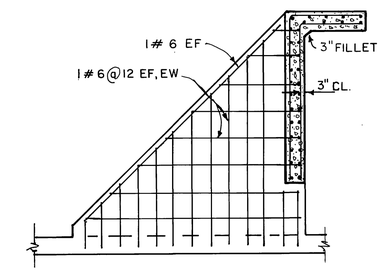

SECTION C

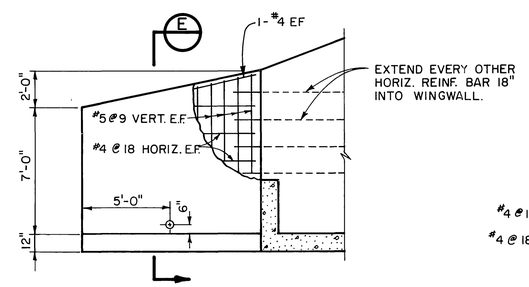

SECTION D

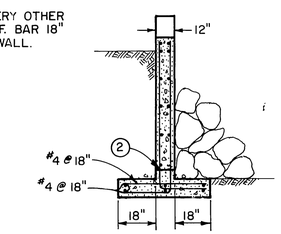

SECTION E

NOTES

1. ALL STEEL SHALL HAVE 2" COVER UNLESS OTHERWISE NOTED.
2. 6" STARTER WALL WITH CONST. JOINT TO BE USED IN ALL CASES.
3. 1/2 TON ROCK SLOPE PROTECTION.
4. CONST. 11/2" DIA. WEEPHOLES WITH RODENT SCREEN & 1 CUBIC FT. OF FILTER MAT'L. AT EACH HOLE. RODENT SCREEN AND FILTER MAT'L. ARE TO BE OMITTED IN DOWNSTREAM ENDWALL WEEPHOLES.
5. FOR CHAIN LINK FENCE DETAILS SEE STD. M-801
6. ALL EXPOSED EDGES ON CONC. STRUCTURES SHALL HAVE A 3/4" CHAMFER.
7. ALL CONCRETE SHALL BE CLASS "A".

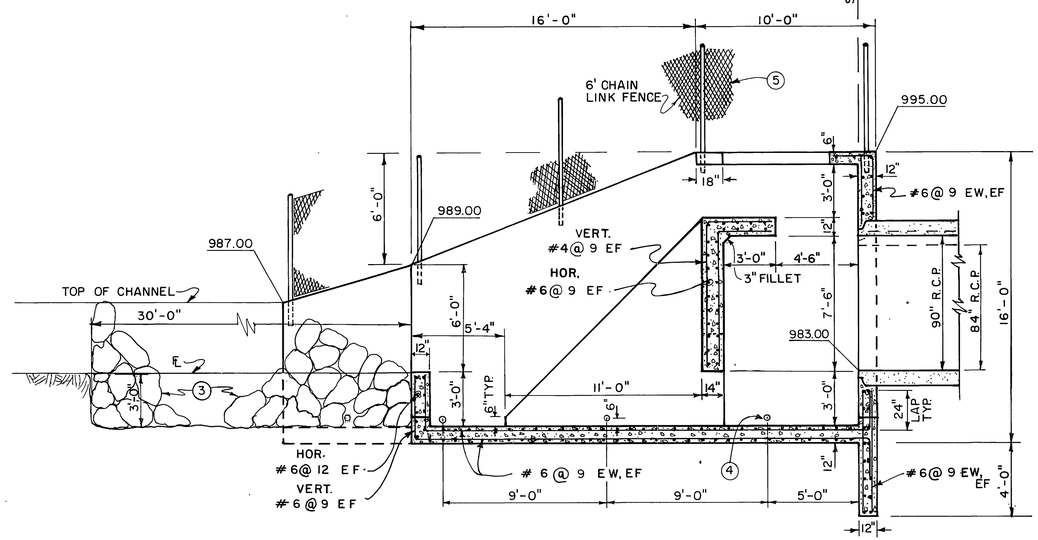

SECTION A

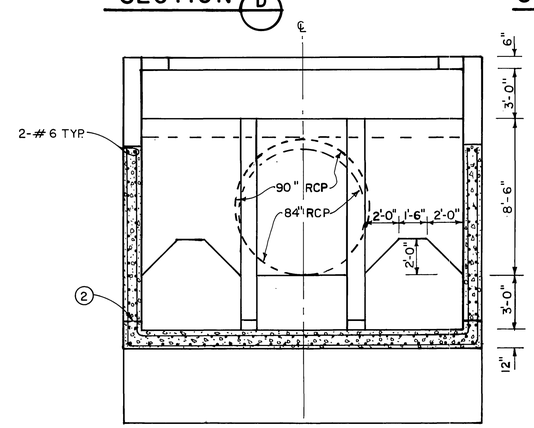

SECTION F

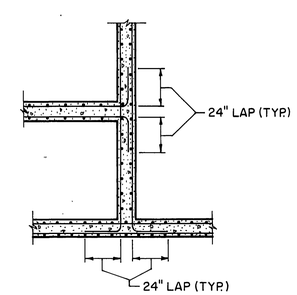

DETAIL G

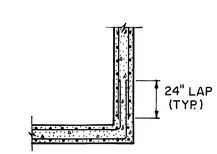

DETAIL H

INTERSECTING WALL & CORNER DETAILS
TYPICAL ALL CORNERS & INTERSECTIONS

SCALE
4' 0 4'

REVISIONS			
REF.	DESCRIPTION	APPR.	DATE
	No Change		

RIVERSIDE COUNTY FLOOD CONTROL AND WATER CONSERVATION DISTRICT

DESIGNED BY: J.R.C.
DRAWN BY: R.D.A.
DATE DRAWN: 5-81
CHECKED BY:
APPROVED BY: Kenneth J. Edwards
CHIEF ENGINEER R.E. NO. 12400
DATE: 6-26-81

MARY STREET LATERALS

OUTLET STRUCTURE FOR 90" & 84" RCP

1970 STORM DRAIN BOND ISSUE PROJECT NO. 13

INDEX OF D-445

PROJECT NO. 1-0-181 & 182
DRAWING NO. 1-298
SHEET NO. 17 OF 47

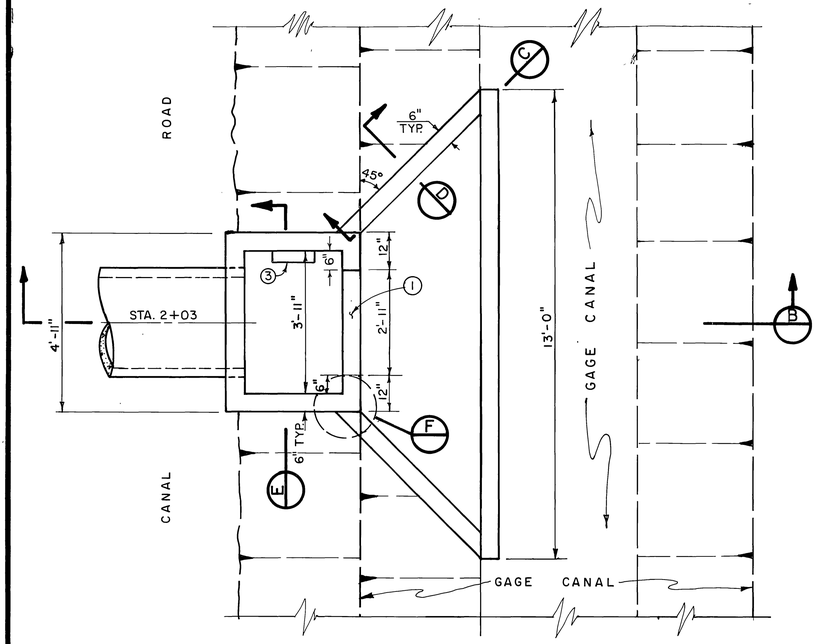

PLAN VIEW

CANAL TURNOUT STA. 2+03
NORTH LATERAL
(SEE SHEET 2)

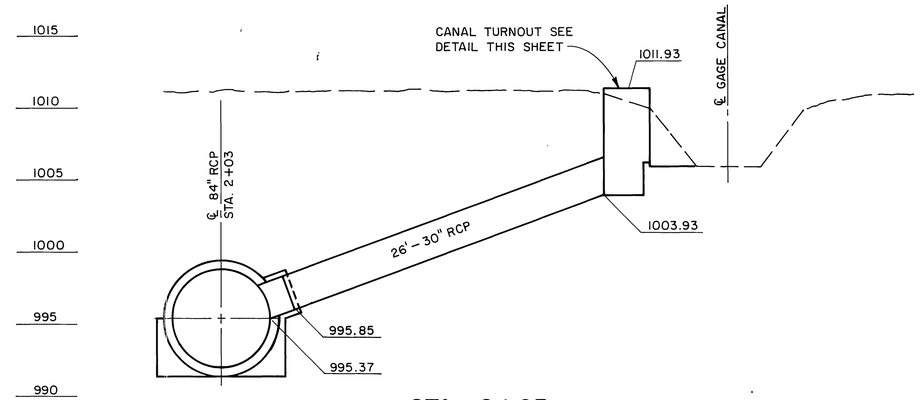

STA. 2+03

CANAL TURNOUT CONNECTOR PIPE
(FOR PLAN VIEW SEE SHEET 2)

5' 0 5'

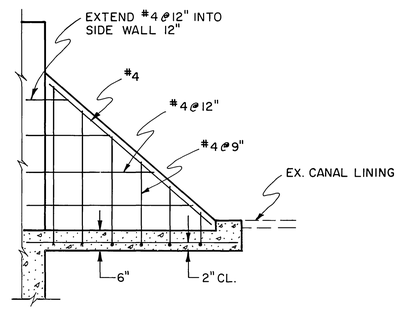

SECTION C

N.T.S.

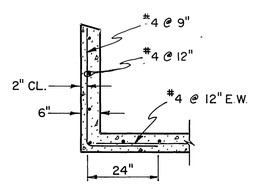

SECTION D

N.T.S.

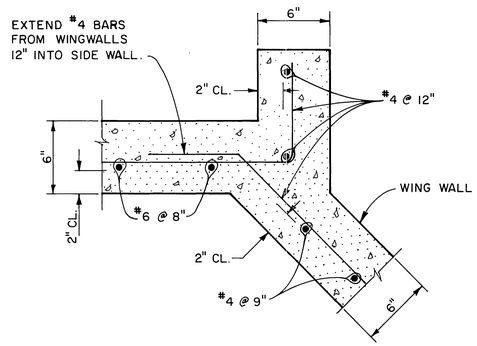

DETAIL F

N.T.S.

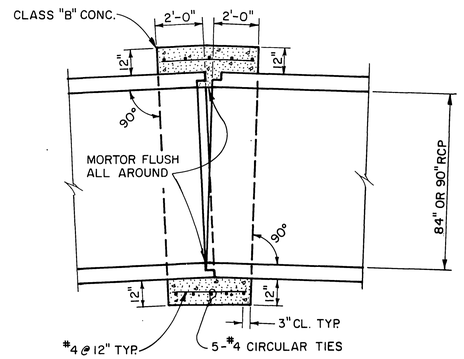

CONCRETE COLLAR FOR 84" & 90" RCP

(SEE SHEET 2 & 8)
N.T.S.

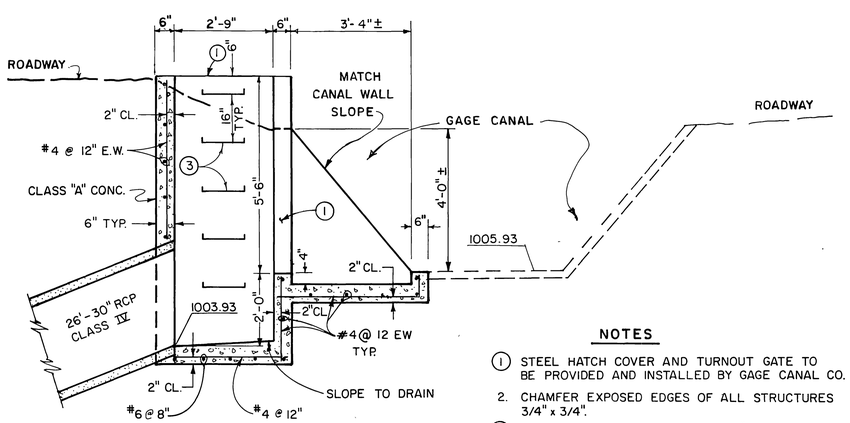

SECTION B

TYPICAL SCALE
2' 0 2'

NOTES

1. STEEL HATCH COVER AND TURNOUT GATE TO BE PROVIDED AND INSTALLED BY GAGE CANAL CO.
2. CHAMFER EXPOSED EDGES OF ALL STRUCTURES 3/4" x 3/4".
3. STANDARD MH259 DROP STEP 16" O.C.

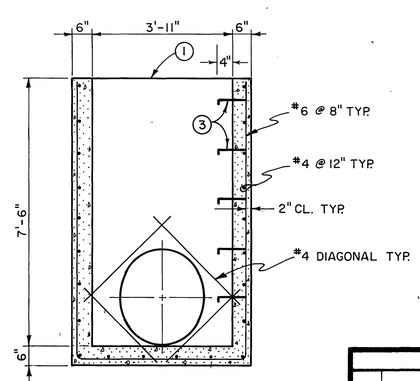

SECTION E

N.T.S.

INDEX W
D-445

REVISIONS			
	No Change		
REF.	DESCRIPTION	APPR.	DATE

RIVERSIDE COUNTY FLOOD CONTROL AND WATER CONSERVATION DISTRICT

DESIGNED BY: J.R.C.
DRAWN BY: R.A.P.
DATE DRAWN: 5-81
CHECKED BY: [illegible]

APPROVED BY: Kenneth L. Edwards
CHIEF ENGINEER R.E. NO. 12400
DATE: 6-26-81

MARY STREET

NORTH & SOUTH LATERAL

DETAILS

1970 STORM DRAIN BOND ISSUE PROJECT NO. 13

PROJECT NO. 1-0-181 & 182
DRAWING NO. 1-298
SHEET NO. 18 OF 47

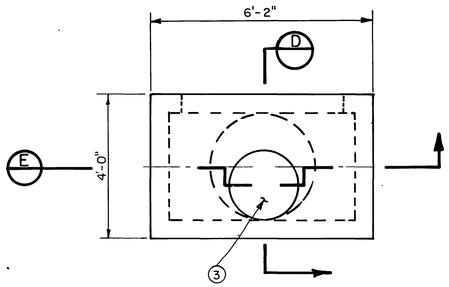

MANHOLE DROP INLET
PLAN VIEW

SO. LATERAL STA. 21+73.34
(SEE SHEET 10)

TYPICAL SCALE
2' 0 2'

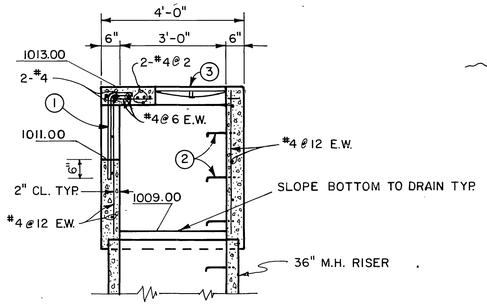

SECTION D

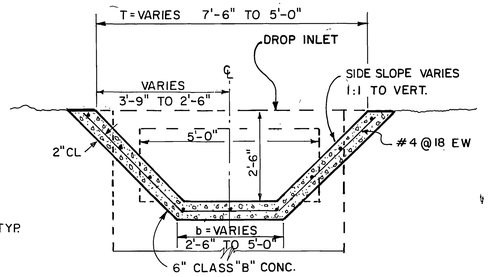

TYPICAL SECTION C
NTS

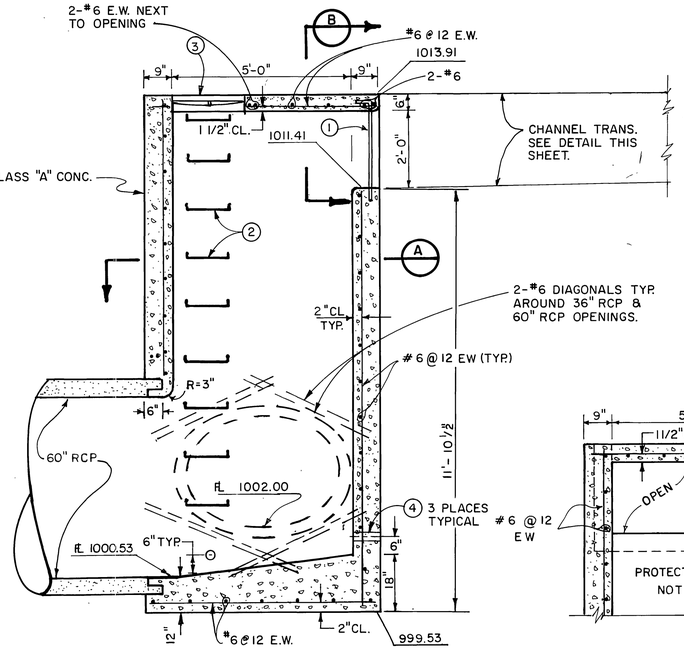

DROP INLET
NORTH LATERAL STA. 56+36.56
(SEE SHEET 7)

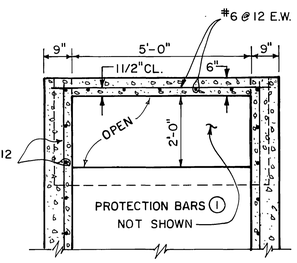

SECTION B

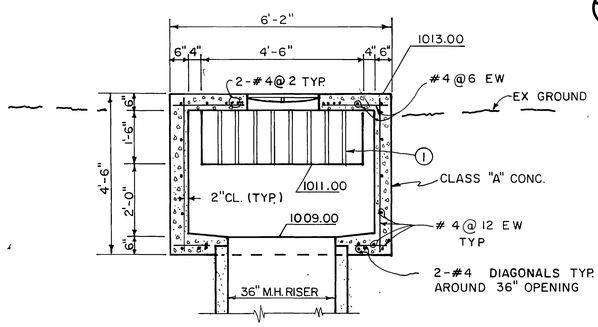

SECTION E

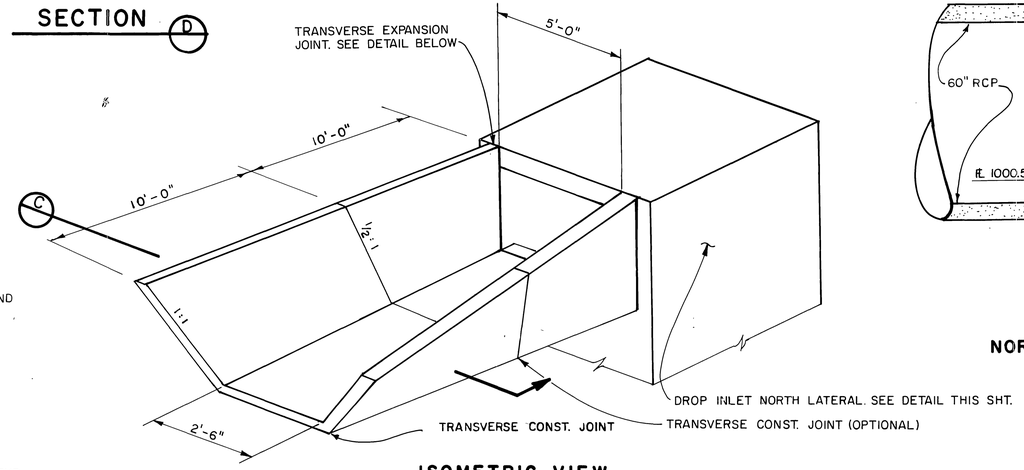

ISOMETRIC VIEW
CHANNEL TRANSITION
NORTH LATERAL
STA. 56+39.81 TO 56+59.81
(SEE SHEET 7)
N.T.S.

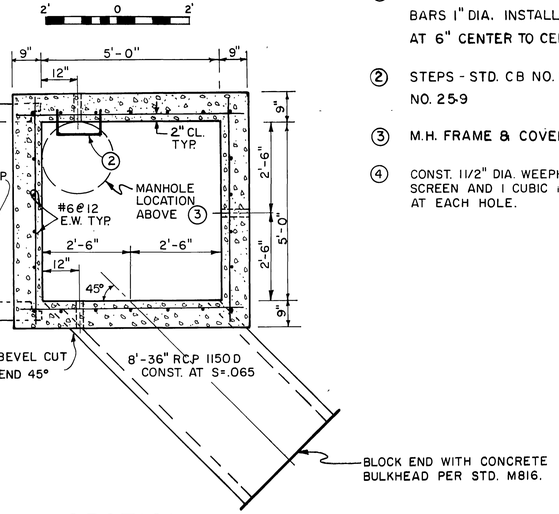

SECTION A

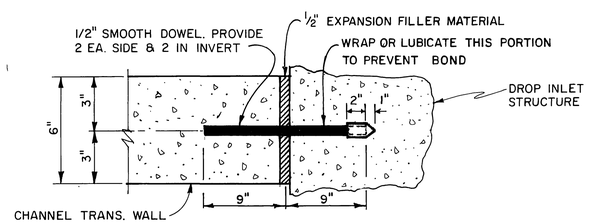

TRANSVERSE EXPANSION JOINT DETAIL
N.T.S.

NOTES

1. PROTECTION BARS ARE SMOOTH STEEL BARS 1" DIA. INSTALLED WITH 6" EMBEDMENT AT 6" CENTER TO CENTER.
2. STEPS - STD. CB NO. 110 (NOTE 5) & STD MH. NO. 25-9
3. M.H. FRAME & COVER STD. CB 103.
4. CONST. 1 1/2" DIA. WEEPHOLE WITH RODENT SCREEN AND 1 CUBIC FT. OF FILTER MATERIAL AT EACH HOLE.

INDEX 4E

REVISIONS			
REF.	DESCRIPTION	APPR.	DATE
	No Change		

RIVERSIDE COUNTY FLOOD CONTROL AND WATER CONSERVATION DISTRICT

DESIGNED BY: J.R.C.
DRAWN BY: K.R.B.
DATE DRAWN: 5-81
CHECKED BY:
APPROVED BY: Kenneth L. Edwards
CHIEF ENGINEER R.E. NO. 12400
DATE: 6-26-81

MARY STREET
NORTH & SOUTH LATERAL
DROP INLET DETAILS
1970 STORM DRAIN BOND ISSUE PROJECT NO. 13

PROJECT NO. 1-0-181 & 182
DRAWING NO. 1-298
SHEET NO. 19 OF 47

AS BUILT

D-445

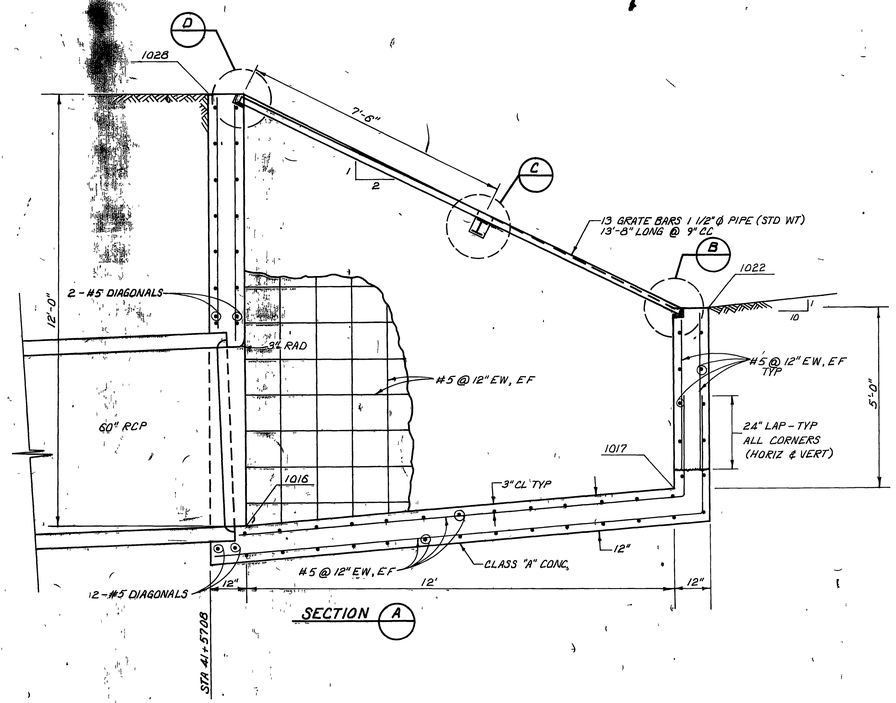

SECTION (A)

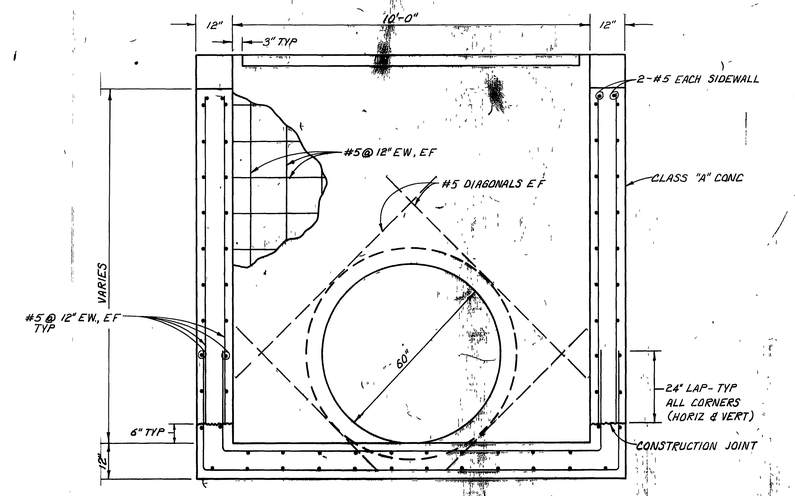

SECTION (B)

INVERT SLOPE & GRATE NOT SHOWN FOR SIMPLICITY

NOTES:

1 ALL EXPOSED EDGES OF CONC STRUCTURE SHALL HAVE A 3/4" CHAMFER

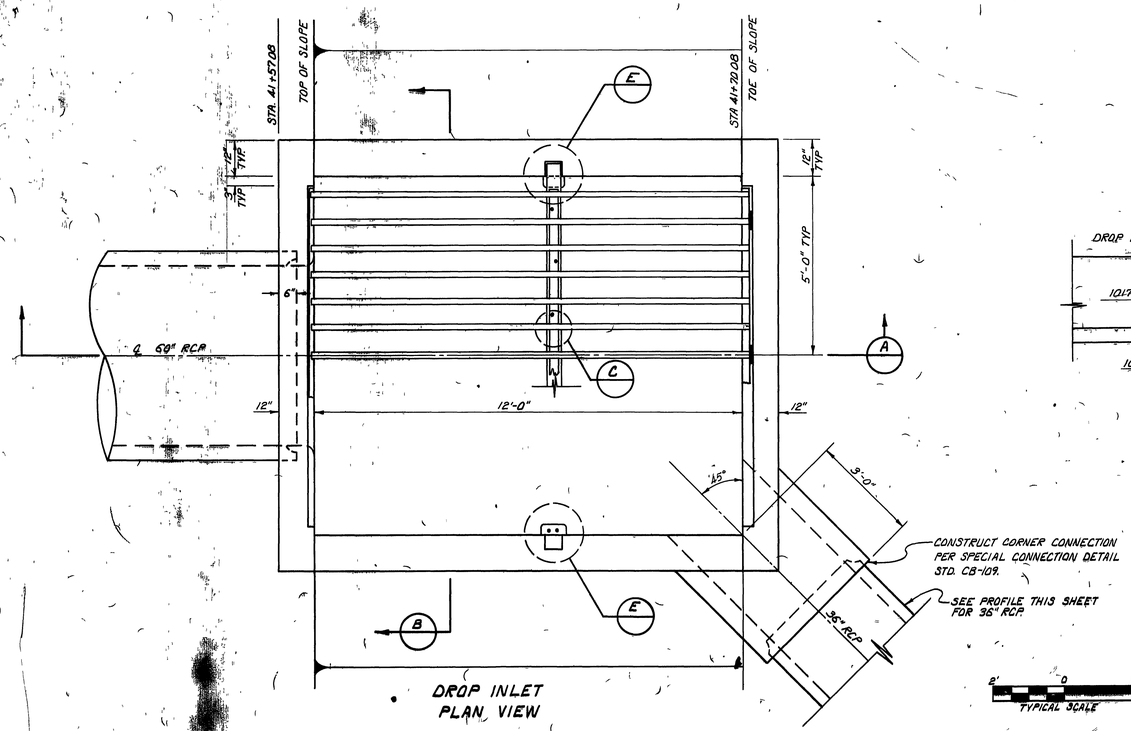

DROP INLET
PLAN VIEW

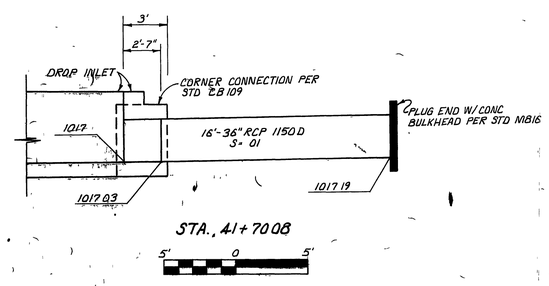

STA. 41+70.08

2' 0 2'
TYPICAL SCALE

REVISIONS			
	No Change		
REF.	DESCRIPTION	APPR.	DATE

AS BUILT

RIVERSIDE COUNTY FLOOD CONTROL AND WATER CONSERVATION DISTRICT

DESIGNED BY: S.E.S.
DRAWN BY: D.L.P.
DATE DRAWN: 1-82
CHECKED BY: NLS

APPROVED BY: Kenneth Phillips
CHIEF ENGINEER R.E. NO. 15846
DATE: 1-20-82

MARY STREET SOUTH LATERAL

DETAILS

INDEX NO.
PROJECT NO. 1-0-181
DRAWING NO. 1-298
SHEET NO. 19A OF 47

D 445 19A

D-445

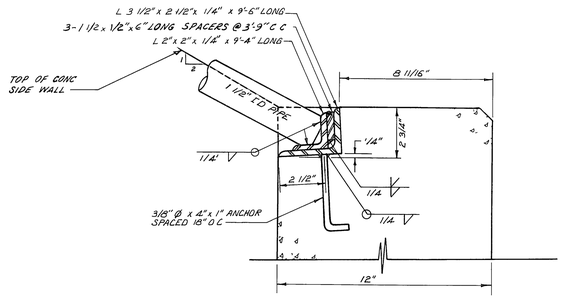

DETAIL B

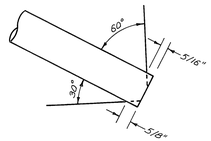

PIPE END CHAMFER DETAIL

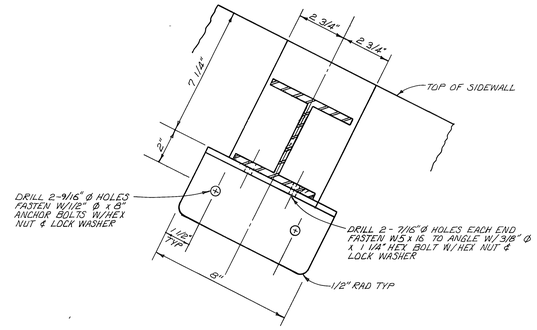

DETAIL F

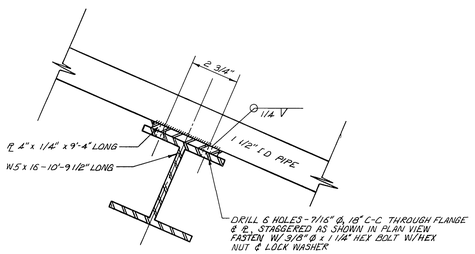

DETAIL C

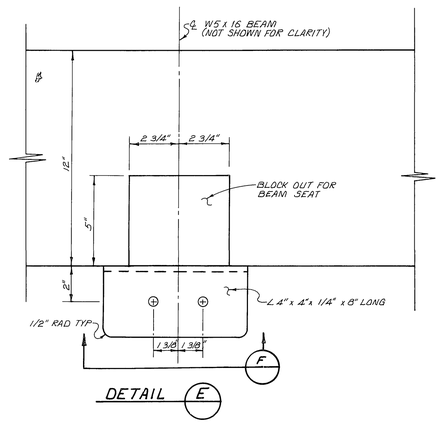

DETAIL E

VIEW NORMAL TO TOP OF SIDE WALL

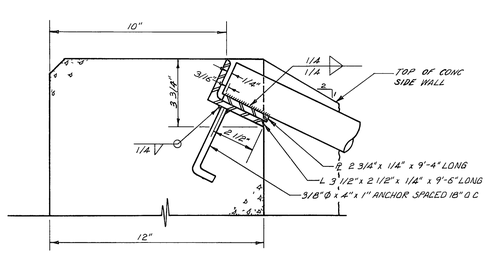

DETAIL D

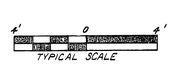

TYPICAL SCALE

REVISIONS			
	No Change		
REF.	DESCRIPTION	APPR.	DATE

AS BUILT

RIVERSIDE COUNTY FLOOD CONTROL AND WATER CONSERVATION DISTRICT

DESIGNED BY: S.E.S.
DRAWN BY: D.L.P.
DATE DRAWN: 1-82
CHECKED BY: NLS

APPROVED BY: Kenneth L. Edwards
CHIEF ENGINEER R.E. NO. 12400
DATE: 1-20-82

MARY STREET SOUTH LATERAL

DETAILS

INDEX 45

PROJECT NO. 1-0-181
DRAWING NO. 1-298
SHEET NO. 19B OF 47

D-445

NOTE: CONTRACTOR SHALL PROTECT IN PLACE ALL UTILITIES CROSSING OR PARALLELING THE STORM DRAIN, UNLESS OTHERWISE NOTED.

MATCH LINE — STA. 30+00 — ℄ SKYE DR. STA. 32+52.77 — M.H. NO. 2 STA. 33+99.38 — STA. 33+97.04 — STA. 41+71.08 END DROP INLET — STA. 41+57.06 BEGIN DROP INLET

STA. 41+48.08 ℄ PIPE = STA. 10+00 ℄ DIKE

W.S. — HGL — EXIST. GR. OVER ℄ S.D. — IRR 8 — SS8 (FUTURE) — FUTURE 24" CONNECTIONS (E)

S=.001 — 999.28 — HYDRAULIC DATA: Q=315 cfs, V=7.13 fps — 999.68 GR. CHANGE — S=.01219 — 1004.00 GR. CHANGE STA. 37+53.71 — S=.02968 — 1017.00 STA. 41+70.08 — 1016.00 GR. CHANGE STA. 41+58.08 — 1022.00 — S=.10

HYDRAULIC DATA: Q=297 cfs, V=15.13 fps

756'-60" RCP 1250 D

WORK UNDER MARY STREET LATERALS CONTRACT

397'-90" RCP - 1000 D

WORK UNDER CHANGE ORDER

S 59°07'51"W

℄ DIKE PROFILE

℄ DIKE CURVE DATA: Δ=40°00'00", R=30', T=10.92', L=20.94', B.C.=10+31.00, E.C.=10+51.94

℄ CURVE DATA: Δ=63°03'12", R=300', T=184.03', L=330.15', B.C.=36+06.93, E.C.=39+37.08

℄ CURVE DATA: Δ=07°13'13", R=494', T=31.17', L=62.25', B.C.=29+71.02, E.C.=30+33.27

NOTES:

1. REMOVE INTERFERING PORTION OF 9" PIPE AND PLUG
2. PROTECT 8" STEEL IRRIG. LINE IN PLACE.
3. FUTURE CURB, GUTTER & DRAINS BY OTHERS.
4. 14' CHAIN LINK DOUBLE GATE.
5. EXISTING WATER SERVICE TO BE ABANDONED. REMOVE INTERFERING PORTIONS & PLUG.
6. REMOVE ABANDONED IRRIG. & WATER LINES UNDER DIKE & IN BASIN AREA & PLUG REMAINING PORTIONS. CLEAR BASIN AREA OF TREES AS DIRECTED.
7. REMOVE EXIST. CONC. RUBBLE DITCH AND CULVERT SOUTHERLY OF STA. 40+75. PROTECT REMAINING RUBBLE DITCH IN PLACE & CONST. CONC. RUBBLE END WALL AT STA. 40+75.
8. EXIST. 36" CMP S.D. TO REMAIN. GRADE TO DRAIN TO DROP INLET.
9. PROTECT ALL POWER POLES IN PLACE.
10. DROP INLET AND STUB LATERAL. 16'-36" RCP 1150 D. SEE SHT. 19A & 19B. BLOCK END OF STUB WITH CONC. BULKHEAD PER STD. M816.
11. GRADE BASIN AREA TO DRAIN TO INLET ALL AROUND AT S=.10.
12. EX. 6' CHAIN LINK FENCE. PROTECT IN PLACE OR REMOVE & REPLACE AS REQ'D.

TRACT 7757 — MATCH LINE — STA. 30+00 — ℄ SKYE DRIVE — HAWARDEN DRIVE — GAGE CANAL — CANAL R/W — FUTURE STREET R/W — IRR 8 — SOIL BORING NO. 7 — BH-1 — BH-2 — BH-3 — ABND. IRR 8 — S 32°11'03"W — S 30°32'09"E — S 19°07'51"W — EL. 1028 — STA. 11+05± MEET EXIST. GR. — STA. 41+48.08 ℄ PIPE = STA. 10+00 ℄ DIKE

℄ GAGE CANAL — CANAL R/W — ℄ HAWARDEN DR. — R/W — 25' — 15' TCE — 9' — 6' — 15' — 33' — G3 — SS8 — W6 — 90" R.C.P.

SECTION AT STA. 32+00

PLAN

1" = 50'

50' 0 50'

CONTOUR INTERVAL = 1'

REVISIONS			
REF.	DESCRIPTION	APPR.	DATE
	No Change		

AS BUILT

RIVERSIDE COUNTY FLOOD CONTROL AND WATER CONSERVATION DISTRICT

DESIGNED BY: J.L.H. & F.J.R.
DRAWN BY: S. Moody
DATE DRAWN: 5/81
CHECKED BY: WLS

APPROVED BY: Kenneth A. Schroeder Jr.
CHIEF ENGINEER R.E. NO. 12400
DATE: 1-20-82

MARY STREET
SOUTH LATERAL
STA. 30+00 TO STA. 41+71.08

1970 STORM DRAIN BOND ISSUE PROJECT NO. 13

INDEX UE

PROJECT NO. 1-0-181
DRAWING NO. 1-298
SHEET NO. 11A OF 47

D-445