# RIVERSIDE COUNTY FLOOD CONTROL AND WATER CONSERVATION DISTRICT

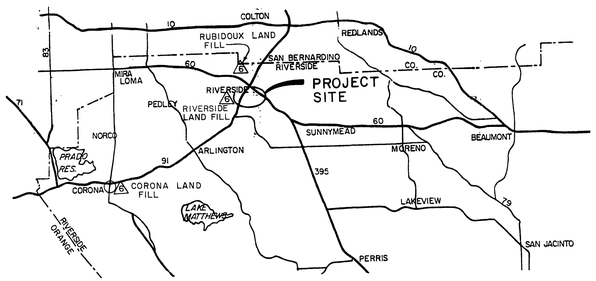


VICINITY MAP

0 1 2 3 4 5mi.

## GENERAL NOTES

1. ALL STORM DRAIN STATIONING REFERS TO CENTERLINE OF CONSTRUCTION.
2. BASIN STATIONING REFERS TO NORTHERLY PROPERTY LINE.
3. OPENINGS RESULTING FROM THE CUTTING OR PARTIAL REMOVAL OF EXISTING CULVERTS, PIPES OR SIMILAR STRUCTURES SHALL BE SEALED WITH 6" OF CLASS "B" CONCRETE NOTED ON THE PLANS AS "PLUG".
4. ELEVATIONS OF UTILITIES ARE APPROXIMATE UNLESS NOTED OTHERWISE.
5. 48 HOURS BEFORE STORM DRAIN EXCAVATION, CALL UNDERGROUND SERVICE ALERT 1-800-422-4133.

(6) OPTIONAL DISPOSAL SITES, REFER TO SPECIFICATIONS.

## INDEX


| | |
|---|---|
| TITLE SHEET | 1 |
| BASIN PLAN VIEW | 2-3 |
| MONROE INLET/OUTLET PLAN & PROFILE | 4 |
| MONROE STREET INLET PLAN & PROFILE | 5-6 |
| MONROE STREET OUTLET PLAN & PROFILE | 7 |
| GRATTON STREET LATERAL PLAN & PROFILE | 8 |
| SPILLWAY DETAILS | 9 |
| INLET STRUCTURE DETAILS | 10 |
| MISCELLANEOUS DETAILS, RATING CURVES | 11 |
| DOWN DRAIN PROFILES | 12 |
| CROSS SECTIONS | 13 |
| TRAFFIC PLANS | 14 |


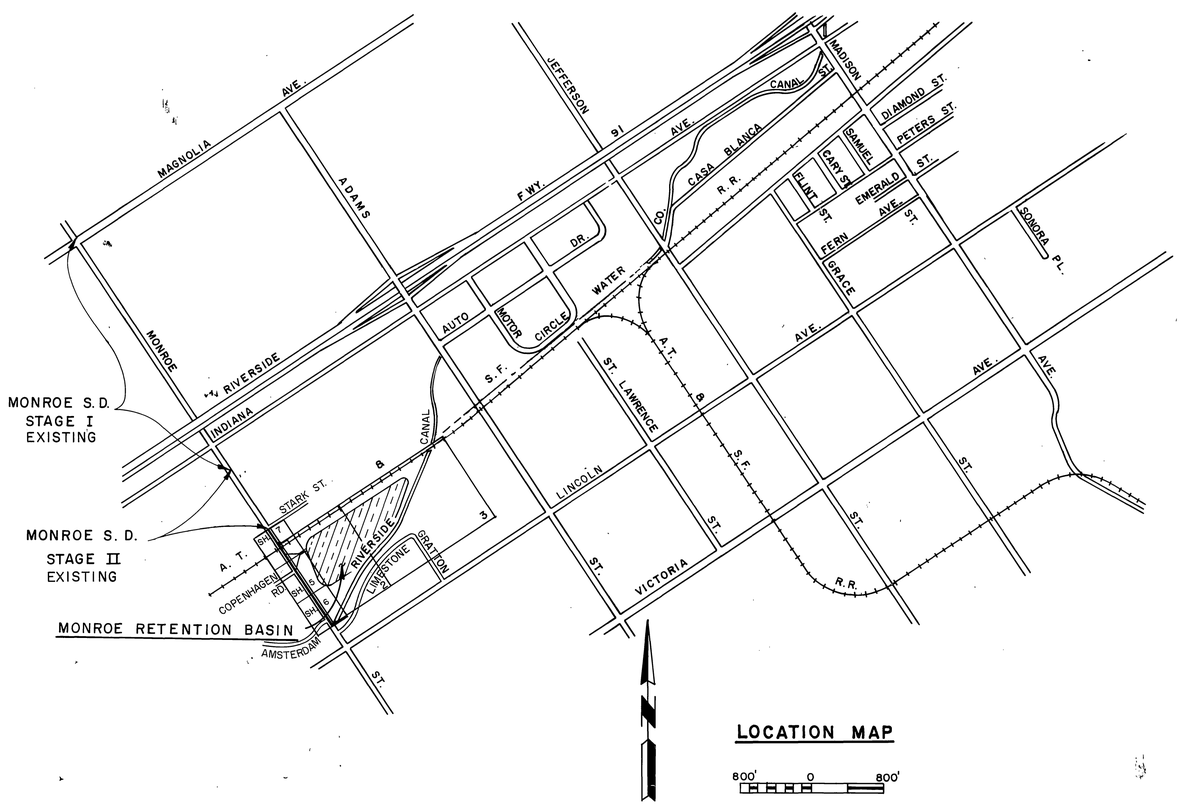


LOCATION MAP

800' 0 800'

## R.C.F.C.D. & W.C.D. STANDARD DRAWINGS

| | | |
|---|---|---|
| CB 100 | CATCH BASIN NO. 1 | 15 |
| CB 103 | MANHOLE FRAME AND COVER FOR C.B. | 16 |
| CB 105 | DETAIL OF CATCH BASIN OPENING | 17 |
| LD 201 | LOCAL DEPRESSION NO. 2 | 18 |
| JS 229 | JUNCTION STRUCTURE NO. 4 | 19 |
| MH 252 | MANHOLE NO. 2 | 20 |
| MH 254 | MANHOLE NO. 4 | 21 & 22 |
| MH 255 | MANHOLE FRAME & COVER NON-ROCKING | 23 |
| MH 257 | MANHOLE SHAFT | 24 |
| MH 259 | STANDARD DROP STEP | 25 |
| TS 303 | TRANSITION STRUCTURE NO. 3 | 26 |
| M 801 | CHAIN LINK FENCE | 27 |
| M 803 | CONCRETE COLLAR FOR PIPES | 28 |
| M 814 | ABBREVIATIONS AND SYMBOLS | 29 |
| M 815 | BEDDING AND PAY LINES | 30 |
| M 811 | SIGNS & MARKER | 31 |

## CITY OF RIVERSIDE STANDARD DRAWINGS

| | | |
|---|---|---|
| NO. 200 | CURB & GUTTER | 32 |
| NO. 221 | SLOTTED CROSS GUTTERS | 33 |
| NO. 325 | SIDEWALK | 34 |
| NO. 250 | ASPHALT CONCRETE BERMS | 35 |
| NO. 304 | WHEELCHAIR RAMPS | 36 & 36A |

INDEXED 9-3-87 LFH

D-526

| REVISIONS | | | |
|---|---|---|---|
| REF. | DESCRIPTION | APPR. | DATE |

RIVERSIDE COUNTY FLOOD CONTROL AND WATER CONSERVATION DISTRICT

DESIGNED BY: C.D.J.
DRAWN BY: R.A.S.
DATE DRAWN: 3-82
CHECKED BY: A.G.K.
APPROVED BY: Kenneth L. Edwards
CHIEF ENGINEER R.E. NO. 12400
DATE: 4-14-82

MONROE STORM DRAIN & RETENTION BASIN

TITLE SHEET

1970 STORM DRAIN BOND ISSUE PROJECT NO. 17

PROJECT NO. 1-0-071
DRAWING NO. 1-417
SHEET NO. 1 OF 36

AS BUILT

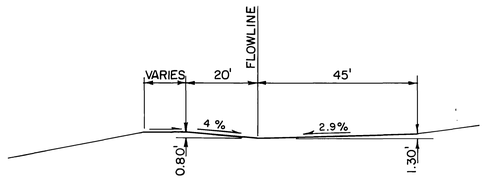


SECTION F/2
N.T.S.

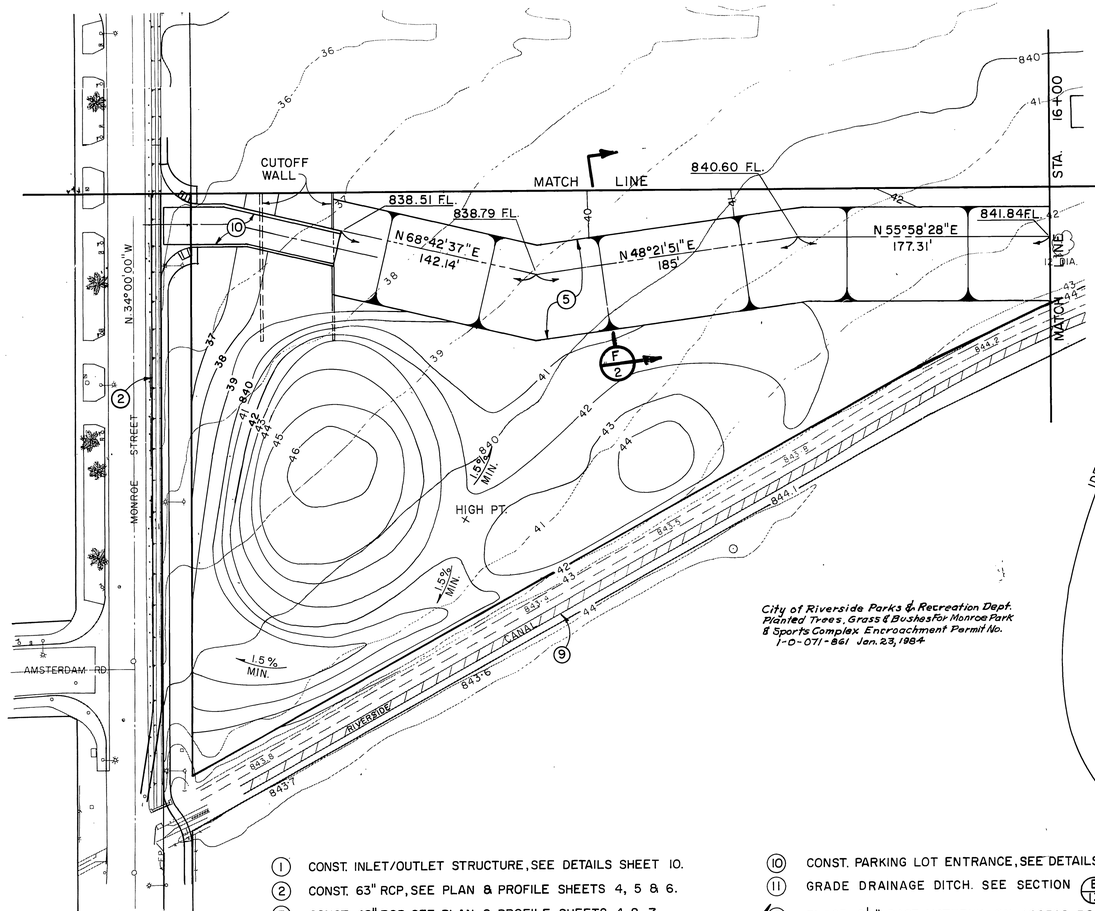


City of Riverside Parks & Recreation Dept. Planted Trees, Grass & Bushes For Monroe Park & Sports Complex Encroachment Permit No. 1-0-071-861 Jan. 23, 1984

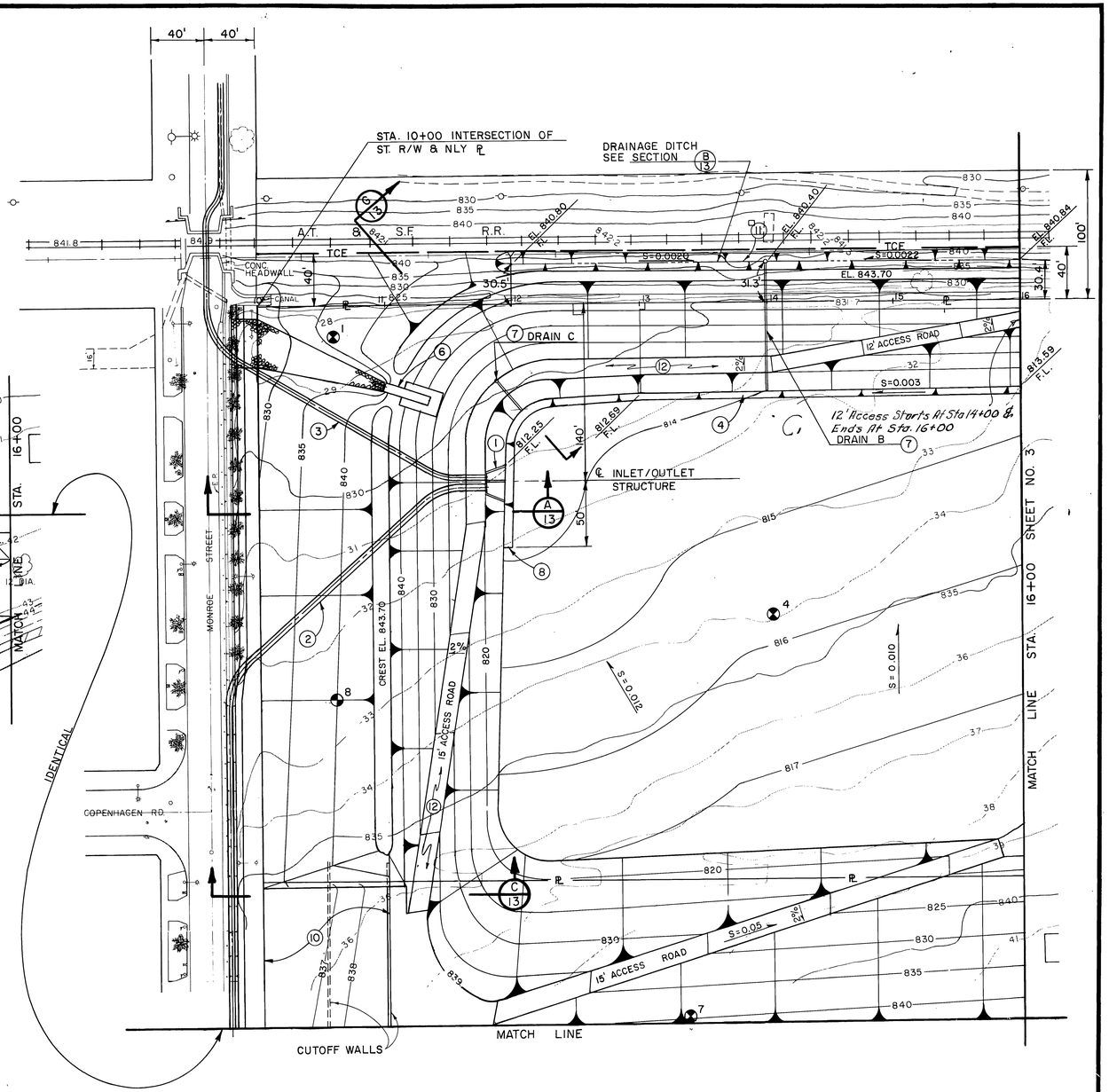


1. CONST. INLET/OUTLET STRUCTURE, SEE DETAILS SHEET 10.
2. CONST. 63" RCP, SEE PLAN & PROFILE SHEETS 4, 5 & 6.
3. CONST. 48" RCP, SEE PLAN & PROFILE SHEETS 4 & 7.
4. CONST. LOW FLOW CHANNEL, SEE DETAIL SHEET 3.
5. GRADE DIRT PARKING LOT, SEE SECTION F THIS SHEET
6. SEE SPILLWAY DETAILS SHEET 9.
7. SEE PROFILE SHEET 12.
8. END OF LOW FLOW CHANNEL, SEE DETAIL "B" SHEET 3.
9. PROTECT EX. CONCRETE CANAL.
10. CONST. PARKING LOT ENTRANCE, SEE DETAILS SHEET 11.
11. GRADE DRAINAGE DITCH. SEE SECTION B/13
12. PLACE 2½" BASE MATERIAL ON ACCESS ROAD.

**PLAN**
1" = 50'
50' 0 50'

BENCH MARK:
CITY OF RIVERSIDE B.M. F5H, FOUND PK NAIL & TAG ON RIV. WATER CO. CANAL HEADWALL, W'LY SIDE MONROE STREET. ELEV. 845.60

| REVISIONS | | | |
|---|---|---|---|
| C, | Change Access Rd. Length | RDS | 9/83 |
| REF. | DESCRIPTION | APPR. | DATE |

RIVERSIDE COUNTY FLOOD CONTROL AND WATER CONSERVATION DISTRICT

DESIGNED BY: C.D.J.
DRAWN BY: R.D.S.
DATE DRAWN: 10-16-81
CHECKED BY: A.G.K.

APPROVED BY: Kenneth L. Edwards
CHIEF ENGINEER R.E. NO. 12400
DATE: 11-14-82

MONROE STORM DRAIN

# MONROE RETENTION BASIN

1970 STORM DRAIN BOND ISSUE PROJECT NO. 17

PROJECT NO. 1-0-071
DRAWING NO. 1-417
SHEET NO. 2 OF 36

INDEXED 9-3-87 4TH

D-326

AS BUILT

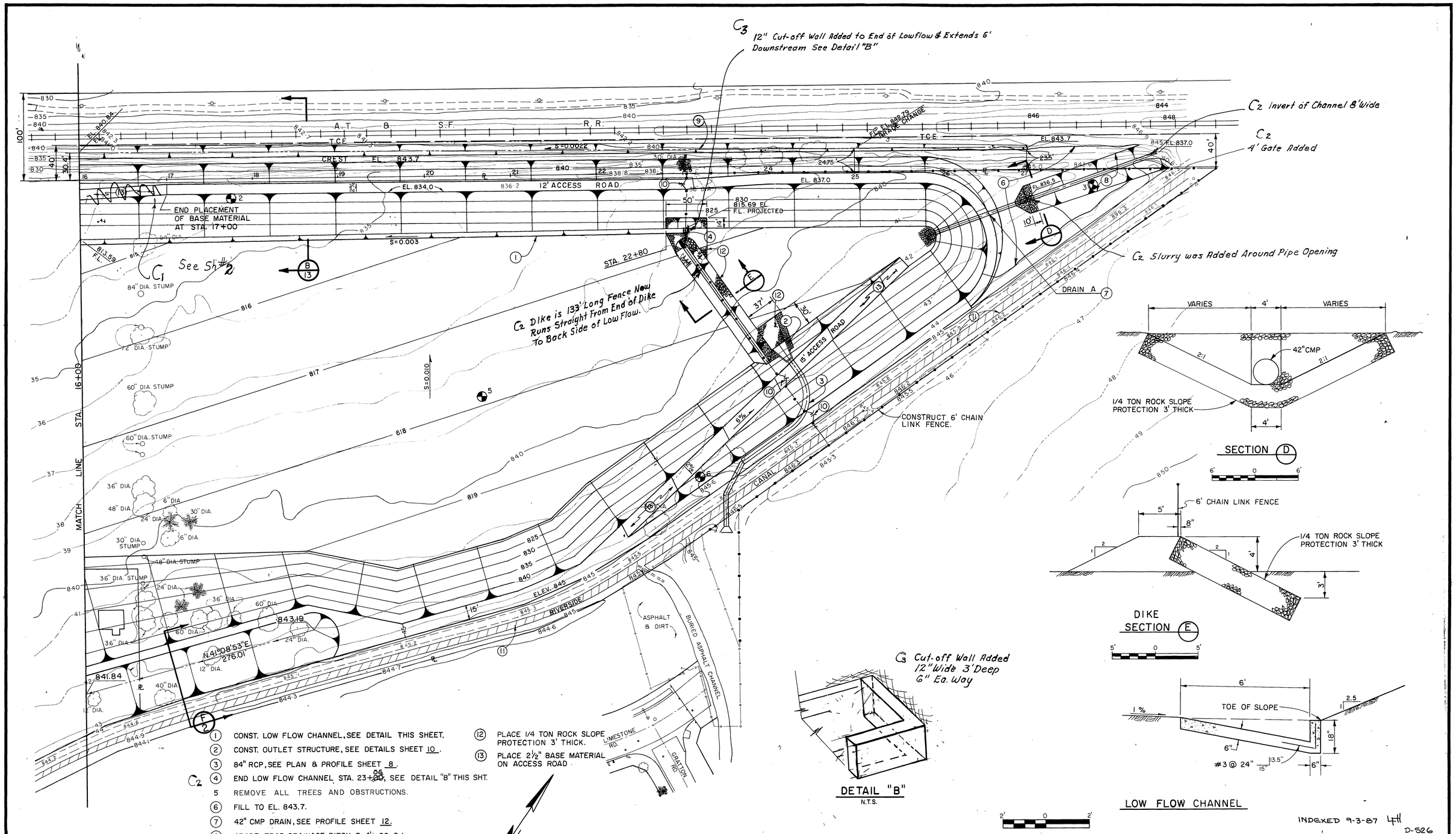


1. CONST. LOW FLOW CHANNEL, SEE DETAIL THIS SHEET.
2. CONST. OUTLET STRUCTURE, SEE DETAILS SHEET 10.
3. 84" RCP, SEE PLAN & PROFILE SHEET 8.
4. END LOW FLOW CHANNEL STA. 23+~~20~~ 06, SEE DETAIL "B" THIS SHT. (C2)
5. REMOVE ALL TREES AND OBSTRUCTIONS.
6. FILL TO EL. 843.7.
7. 42" CMP DRAIN, SEE PROFILE SHEET 12.
8. GRADE TRAP DRAINAGE DITCH, B=4', SS 2:1
9. GRADE DRAINAGE DITCH. SEE SECTION B/13
10. INSTALL 14' METAL FRAME GATE.
11. PROTECT EXISTING CONC. CANAL
12. PLACE 1/4 TON ROCK SLOPE PROTECTION 3' THICK.
13. PLACE 2½" BASE MATERIAL ON ACCESS ROAD

BENCH MARK:
CITY OF RIVERSIDE B.M. F5H, FOUND PK NAIL & TAG ON RIV. WATER CO. CANAL HEADWALL W'LY. SIDE MONROE STREET. EL. 845.60

| REVISIONS | | | |
|---|---|---|---|
| C3 | Cut-off Wall Added | RDS | 9/83 |
| C2 | Changed As Shown | RDS | 9/83 |
| REF. | DESCRIPTION | APPR. | DATE |

AS BUILT

RIVERSIDE COUNTY FLOOD CONTROL AND WATER CONSERVATION DISTRICT

DESIGNED BY: C.J.
DRAWN BY: R.R.S.
DATE DRAWN: 10-14-81
CHECKED BY: A.G.K.
APPROVED BY: Kenneth L. Brown, CHIEF ENGINEER R.E. NO. 12400
DATE: 4-14-82

MONROE STORM DRAIN
# MONROE RETENTION BASIN
1970 STORM DRAIN BOND ISSUE PROJECT NO. 17

PROJECT NO. 1-0-071
DRAWING NO. 1-417
SHEET NO. 3 OF 36

INDEXED 9-3-87 4th
D-526

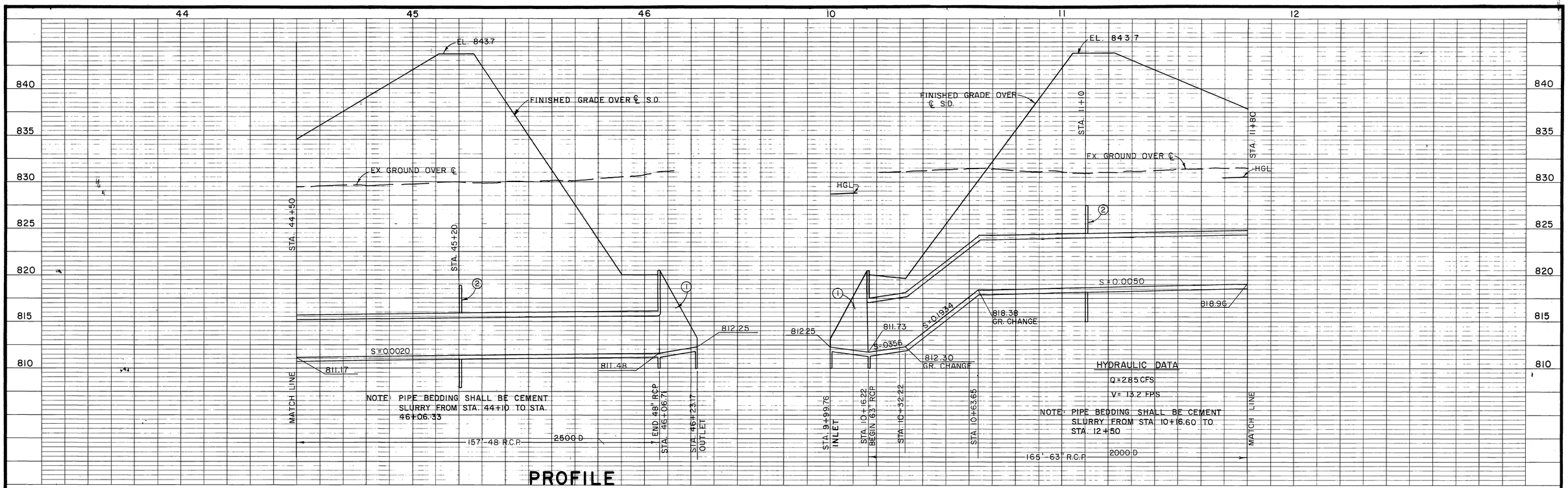


## PROFILE

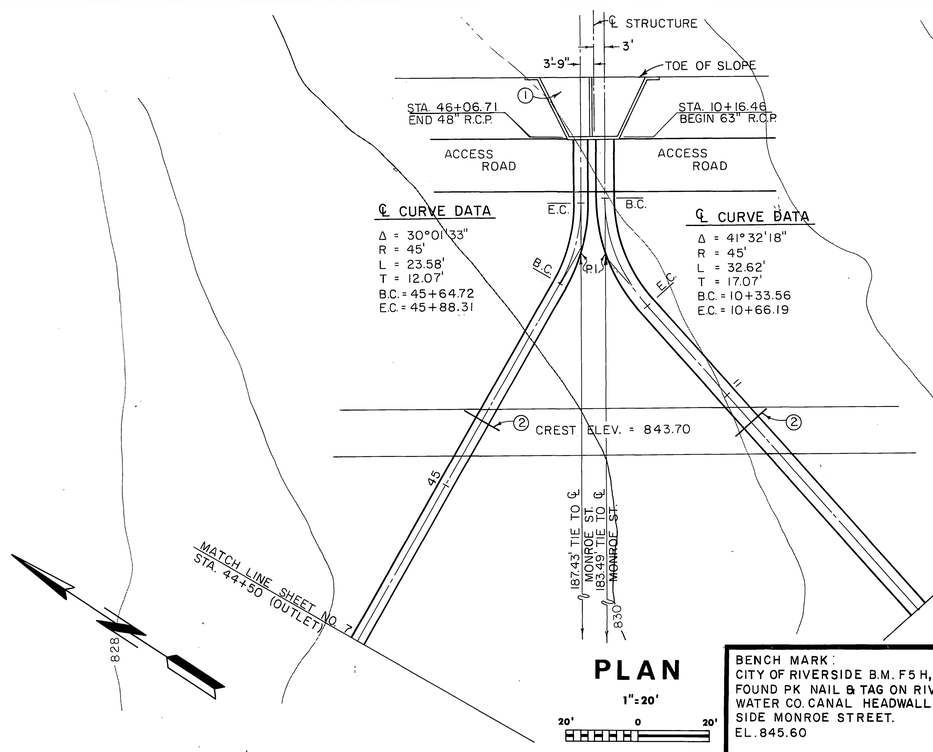


## PLAN

1"=20'

20' 0 20'

① CONSTRUCT INLET/OUTLET STRUCTURE. SEE DETAILS SHEET 10.

② CONSTRUCT CEMENT SLURRY COLLAR, SEE DETAIL THIS SHEET.

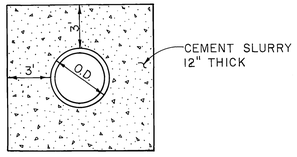


CEMENT SLURRY COLLAR
N.T.S.

INDEXED 9-3-87 LFH
D-526

BENCH MARK:
CITY OF RIVERSIDE B.M. F5 H, FOUND PK NAIL & TAG ON RIV. WATER CO. CANAL HEADWALL W.LY. SIDE MONROE STREET.
EL. 845.60

| REVISIONS | | | |
|---|---|---|---|
| | | | |
| | | | |
| | | | |
| | | | |
| | No Change | | |
| REF. | DESCRIPTION | APPR. | DATE |

AS BUILT

RIVERSIDE COUNTY FLOOD CONTROL AND WATER CONSERVATION DISTRICT

DESIGNED BY: C.J.
DRAWN BY: D.L.P.
DATE DRAWN: 10-81
CHECKED BY: A.G.K.

APPROVED BY: Kenneth L. Richards
CHIEF ENGINEER R.E. NO. 12400
DATE: 4-14-82

MONROE STORM DRAIN

# MONROE STREET INLET/OUTLET

1970 STORM DRAIN BOND ISSUE PROJECT NO. 17

PROJECT NO. 1-0-071
DRAWING NO. 1-417
SHEET NO. 4 OF 36

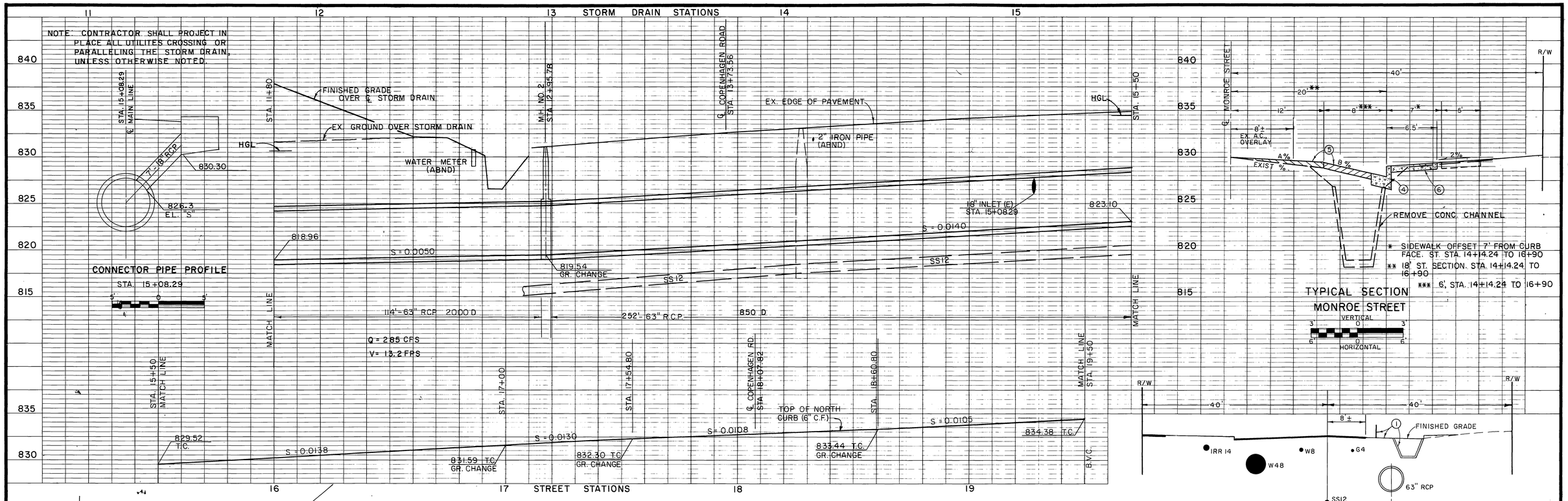


MONROE STREET

| CROSS SLOPE TABLE | | | |
|---|---|---|---|
| STATION | EXIST % | A % | B % |
| 15+00 | 3.63 | 1.11 | 6.66 |
| 16+00 | 6.00 | 1.98 | 6.66 |
| 17+00 | 5.25 | 0.22 | 6.66 |
| 18+00 | 4.50 | 0.66 | 5.00 |
| 19+00 | 1.88 | 1.98 | 5.00 |
| 20+00 | 1.13 | 2.44 | 5.00 |
| 21+00 | 1.50 | 1.32 | 5.00 |
| 22+00 | 2.25 | 2.04 | 5.00 |
| 23+00 | 5.13 | 1.53 | 5.00 |

1. REMOVE EXISTING CHANNEL & WOOD POSTS.
2. CONSTRUCT STREET IMPROVEMENTS, STREET STA. 15+50 TO 19+50. SEE SECTION DETAIL AND CURB PROFILE THIS SHEET.
3. C.B. NO. 1, W=7', V=4', 7'-18" RCP CLASS IV, SEE PROFILE THIS SHEET.
4. CONSTRUCT CURB & GUTTER (6" CURB FACE).
5. PLACE 3" A.C. OVER 9" OF BASE.
6. CONSTRUCT CURB SIDEWALK.

INDEXED 9-3-87 LFH

D-526

BENCH MARK:
CITY OF RIVERSIDE B.M. F5H, FOUND PK NAIL & TAG ON RIV. WATER CO. CANAL HEADWALL, W'LY SIDE MONROE STREET. ELEV. 845.60

| REVISIONS | | | |
|---|---|---|---|
| REF. | DESCRIPTION | APPR. | DATE |
| | No Change | | |

AS BUILT

RIVERSIDE COUNTY FLOOD CONTROL AND WATER CONSERVATION DISTRICT

DESIGNED BY: C.J.
DRAWN BY: D.L.P.
DATE DRAWN: 9-81
CHECKED BY: A.G.K.

APPROVED BY: Kenneth E. Schroeder
CHIEF ENGINEER R.E. NO. 12400
DATE: 4-14-82

MONROE STORM DRAIN
MONROE STREET INLET
STA. 11+80 TO 15+50
1970 STORM DRAIN BOND ISSUE PROJECT NO. 17

PROJECT NO. 1-0-071
DRAWING NO. 1-417
SHEET NO. 5 OF 36

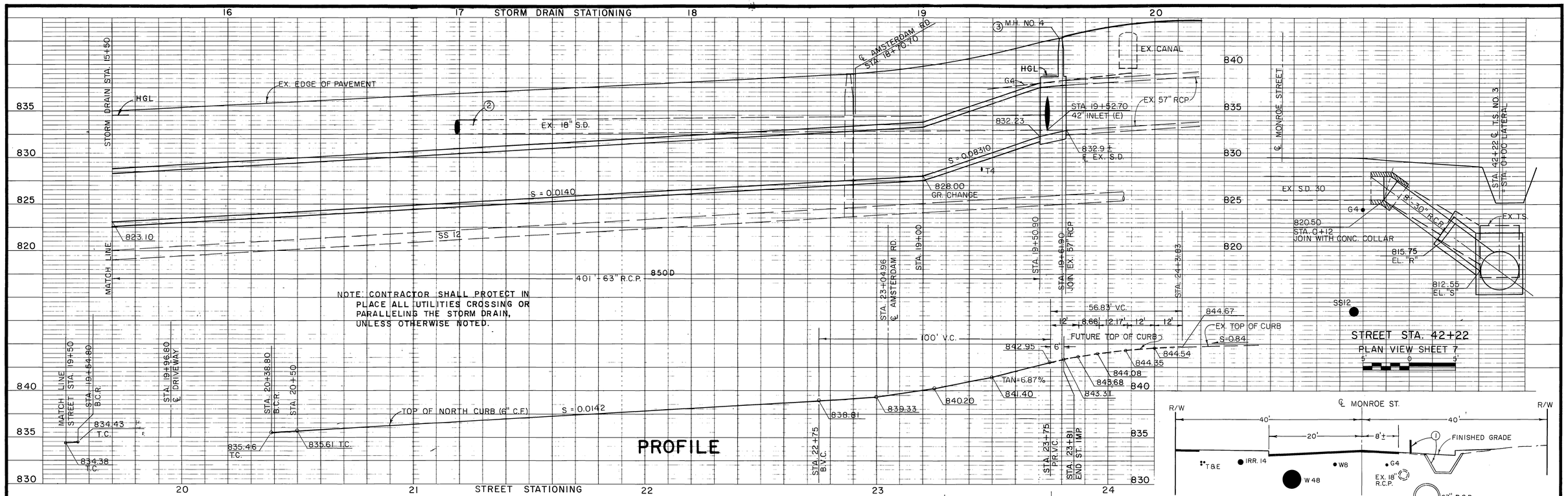


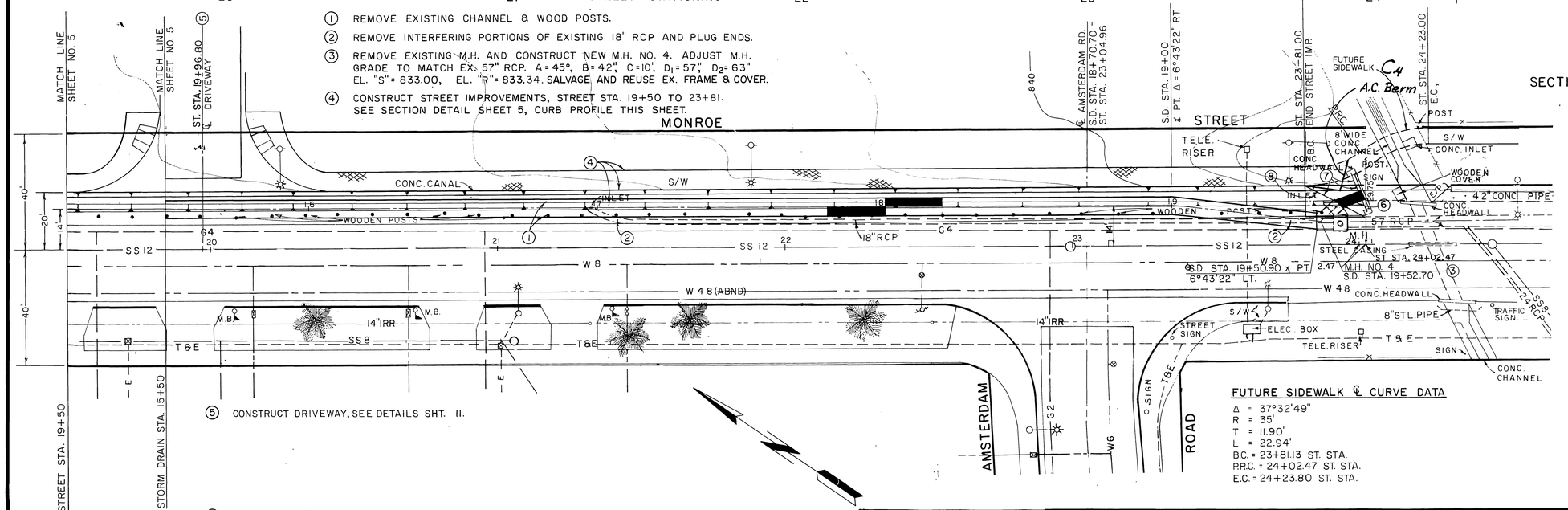


1. REMOVE EXISTING CHANNEL & WOOD POSTS.
2. REMOVE INTERFERING PORTIONS OF EXISTING 18" RCP AND PLUG ENDS.
3. REMOVE EXISTING M.H. AND CONSTRUCT NEW M.H. NO. 4. ADJUST M.H. GRADE TO MATCH EX. 57" RCP. A = 45°, B = 42", C = 10', $D_1$ = 57", $D_2$ = 63" EL. "S" = 833.00, EL. "R" = 833.34. SALVAGE AND REUSE EX. FRAME & COVER.
4. CONSTRUCT STREET IMPROVEMENTS, STREET STA. 19+50 TO 23+81. SEE SECTION DETAIL SHEET 5, CURB PROFILE THIS SHEET.
5. CONSTRUCT DRIVEWAY, SEE DETAILS SHT. 11.
6. PLACE 8'-42" RCP 1000D, CONNECT TO EXISTING CONC. ARCH WITH CONC. COLLAR.
7. FILL TO MATCH SURROUNDING GROUND.
8. CONST. A.C. TAPER, 3" THICK OVER COMPACTED SOIL.

## PLAN

1" = 20'

20' 0 20'

### FUTURE SIDEWALK ℄ CURVE DATA

Δ = 37°32'49"
R = 35'
T = 11.90'
L = 22.94'
B.C. = 23+81.13 ST. STA.
P.R.C. = 24+02.47 ST. STA.
E.C. = 24+23.80 ST. STA.

INDEXED 9-3-87 LH

D-526

BENCH MARK:
CITY OF RIVERSIDE B.M. F5H, FOUND PK NAIL & TAG ON RIV. WATER CO. CANAL HEADWALL W'LY. SIDE MONROE STREET. EL. 845.60

| REVISIONS | | | |
|---|---|---|---|
| REF. | DESCRIPTION | APPR. | DATE |
| | A.C. Berm Added | | 9/83 |

AS BUILT

RIVERSIDE COUNTY FLOOD CONTROL AND WATER CONSERVATION DISTRICT

DESIGNED BY: C.J.
DRAWN BY: D.L.P.
DATE DRAWN: 10-81
CHECKED BY: A.G.K.
APPROVED BY: Kenneth L. Graves, CHIEF ENGINEER R.E. NO. 12400
DATE: 4-14-82

MONROE STORM DRAIN

MONROE STREET INLET

STA. 15+50 TO 19+61

1970 STORM DRAIN BOND ISSUE PROJECT NO. 17

PROJECT NO. 1-0-071
DRAWING NO. 1-417
SHEET NO. 6 OF 36

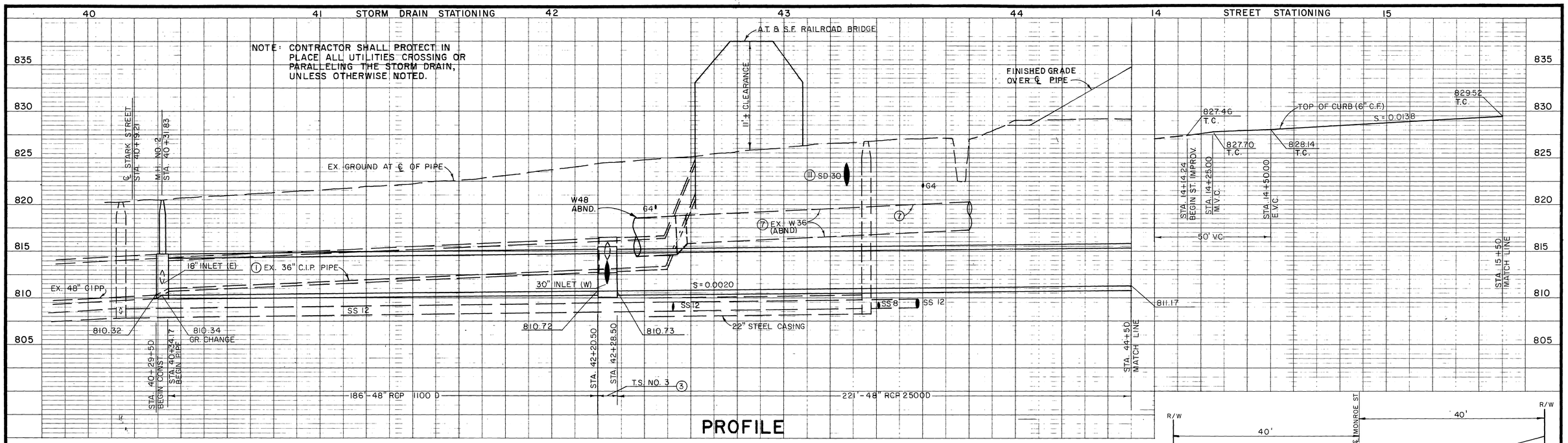


1. REMOVE INTERFERING PORTIONS OF EX. 36" C.I.P. PIPE.
2. REMOVE EX. M.H. AND CONSTRUCT NEW M.H. NO. 2. SALVAGE & REUSE EX. FRAME & COVER. RE-CONNECT EX. 18" CONNECTOR PIPE AT SAME GRADE.
3. T.S. NO. 3, A = 40°, B = 30", C = 7.3', D = 48".
4. REMOVE INTERFERING PORTIONS OF EX. S.D. 30. CONNECT WITH 8'-30" R.C.P. 1300 D. SEE PROFILE SHEET 6.
5. CONSTRUCT STREET IMPROVEMENTS, STREET STA. 14+14.24 TO STA. 15+50. SEE SECTION DETAIL SHEET 5, CURB PROFILE THIS SHEET.
6. REMOVE EX. CHANNEL & WOOD POSTS.
7. REMOVE 95'± OF INTERFERING PORTIONS OF ABND. TECHITE PIPE AND RECONNECT. SEE SPECIFICATIONS.
8. REMOVE ROCK WALL.
9. CONSTRUCT A.C. TAPER, 3" THICK OVER COMPACTED SOIL.
10. CONSTRUCT A.C. BERM, TYPE I.
11. REMOVE INTERFERING PORTIONS OF EX. 30" S.D., PLUG BOTH ENDS.
12. CRUSH EX. CANAL IN PLACE. FILL TO MATCH SURROUNDING GRADE.
13. INSTALL GUIDE MARKERS AS SHOWN.

BENCH MARK:
CITY OF RIVERSIDE B.M. F5 H, FOUND PK NAIL & TAG ON RIV. WATER CO. CANAL HEADWALL W'LY SIDE MONROE STREET. EL. 845.60

| REVISIONS | | | |
|---|---|---|---|
| REF. | DESCRIPTION | APPR. | DATE |
| C6 | 48" R.C.P. x 48' Added | DDS | 9/89 |
| C5 | Added Sidewalk | DDS | 9/89 |

RIVERSIDE COUNTY FLOOD CONTROL AND WATER CONSERVATION DISTRICT

DESIGNED BY: C.J.
DRAWN BY: D.L.P.
DATE DRAWN: 10-81
CHECKED BY: A.G.K.
APPROVED BY: Kenneth L. Edwards
CHIEF ENGINEER R.E. NO. 12400
DATE: 4-14-82

MONROE STORM DRAIN

# MONROE BASIN OUTLET
## STA. 40+29.50 TO 44+50

1970 STORM DRAIN BOND ISSUE PROJECT NO. 17

PROJECT NO. 1-0-071
DRAWING NO. 1-417
SHEET NO. 7 OF 36

AS BUILT

INDEXED 9-3-87 LH
D-526

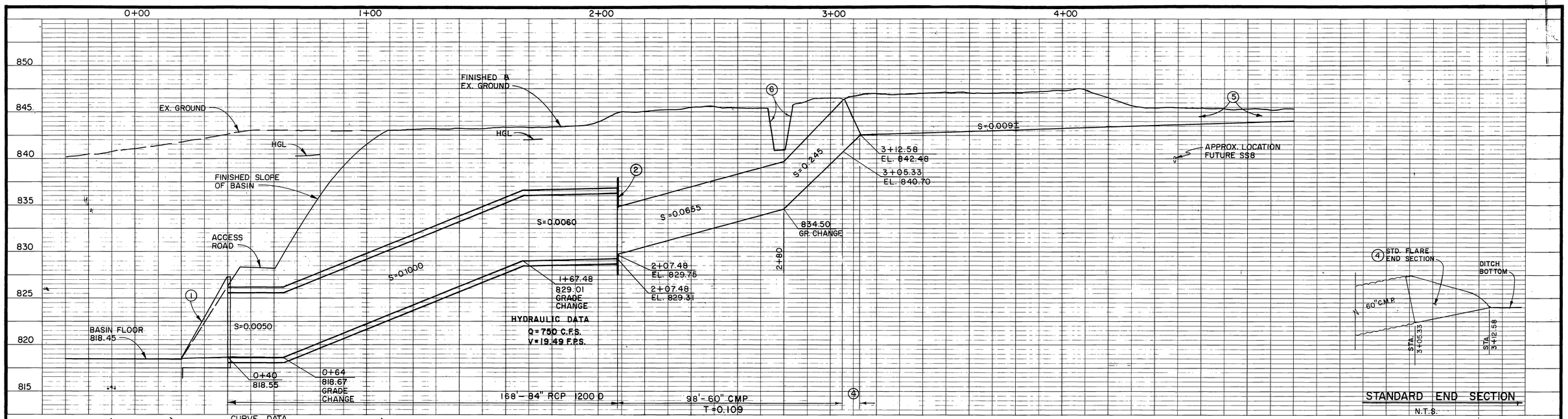


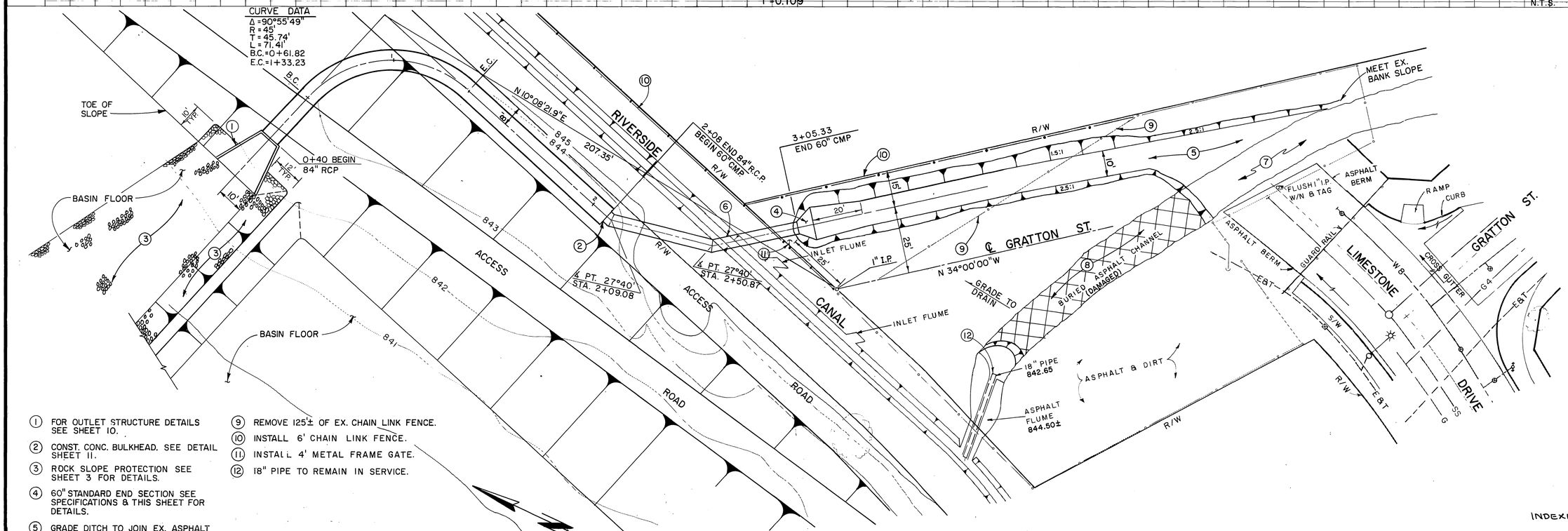


1. FOR OUTLET STRUCTURE DETAILS SEE SHEET 10.
2. CONST. CONC. BULKHEAD. SEE DETAIL SHEET 11.
3. ROCK SLOPE PROTECTION SEE SHEET 3 FOR DETAILS.
4. 60" STANDARD END SECTION SEE SPECIFICATIONS & THIS SHEET FOR DETAILS.
5. GRADE DITCH TO JOIN EX. ASPHALT CHANNEL & STREET PAVEMENT.
6. REMOVE & REPLACE INTERFERING PORTIONS OF EX. CANAL.
7. REMOVE INTERFERING PORTIONS OF BURIED ASPHALT CHANNEL.
8. FILL TO ADJACENT GROUND LEVEL.
9. REMOVE 125'± OF EX. CHAIN LINK FENCE.
10. INSTALL 6' CHAIN LINK FENCE.
11. INSTALL 4' METAL FRAME GATE.
12. 18" PIPE TO REMAIN IN SERVICE.

**PLAN**

1"=20'

20' 0 20'

INDEXED 9-3-87 4H
D-S26

BENCH MARK:

CITY OF RIVERSIDE B.M. F5H, FOUND PK NAIL & TAG ON RIV. WATER CO. CANAL HEADWALL, W'LY SIDE MONROE STREET. ELEV. 845.60

| REVISIONS | | | |
|---|---|---|---|
| REF. | DESCRIPTION | APPR. | DATE |

RIVERSIDE COUNTY FLOOD CONTROL AND WATER CONSERVATION DISTRICT

DESIGNED BY: J.R.C.
DRAWN BY: R.A.S.
DATE DRAWN: 10-19-81
CHECKED BY: A.G.K.

APPROVED BY: Kenneth G. Swick
CHIEF ENGINEER R.E. NO. 12400
DATE: 4-14-82

MONROE STORM DRAIN

# MONROE BASIN
# GRATTON ST. LATERAL

1970 STORM DRAIN BOND ISSUE PROJECT NO. 17

PROJECT NO. 1-0-071
DRAWING NO. 1-417
SHEET NO. 8 OF 36

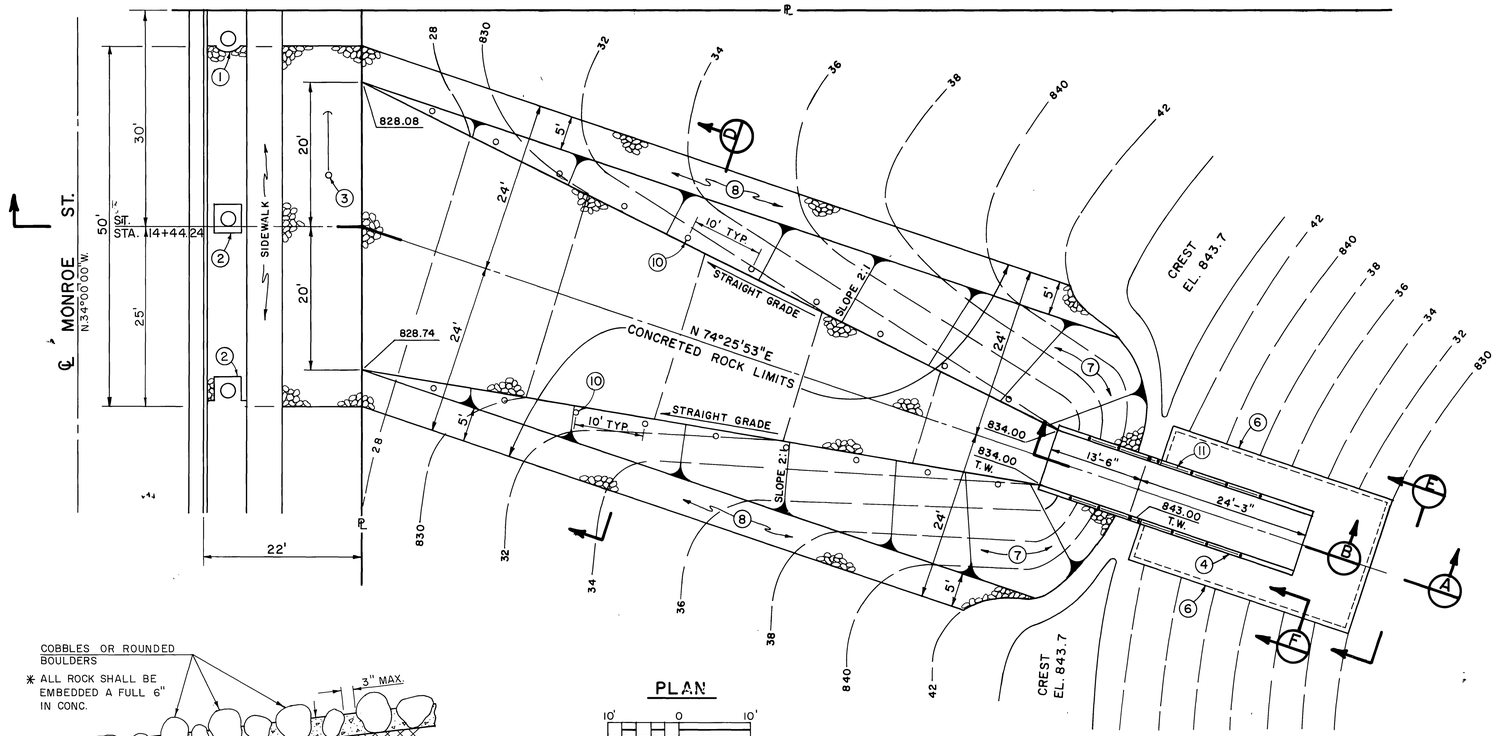


PLAN

10' 0 10'

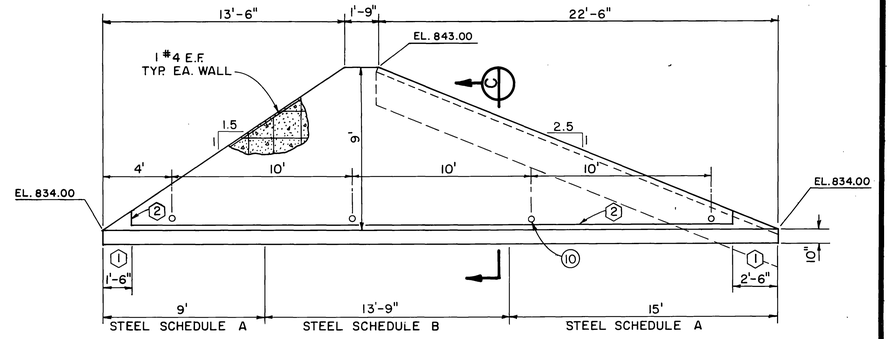


SECTION (B)

4' 0 4'

(1) OMIT M BAR, CUT VERT. LEG OF N BAR TO FIT.

(2) CONSTRUCTION JOINT

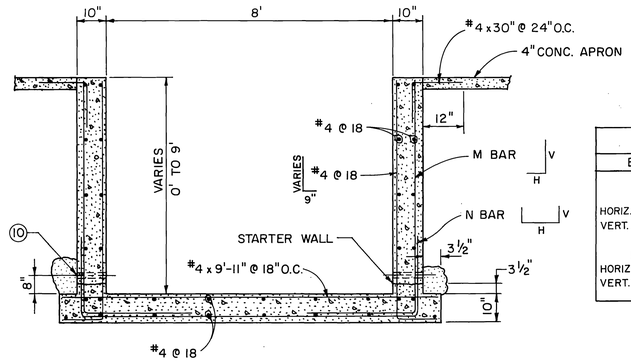


| STEEL SCHEDULE | | |
|---|---|---|
| BAR | A | B |
| M | #4 @ 12 | #6 @ 12 |
| HORIZ. LENGTH | 3'-3" | 3'-9" |
| VERT. LENGTH | VARIES | VARIES |
| N | #4 @ 12 | #7 @ 12 |
| HORIZ. LENGTH | 9'-5" | 9'-5" |
| VERT. LENGTH | 2'-4" | 3'-8" |

SECTION (C)

2' 0 2'

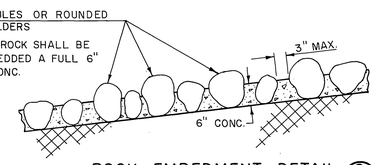


ROCK EMBEDMENT DETAIL (G)

N.T.S.

City of Riverside Parks & Recreation Dept. Planted Trees, Grass & Bushes for Monroe Park & Sports Complex Encroachment Permit No. 1-0-071-861 Jan. 23, 1984

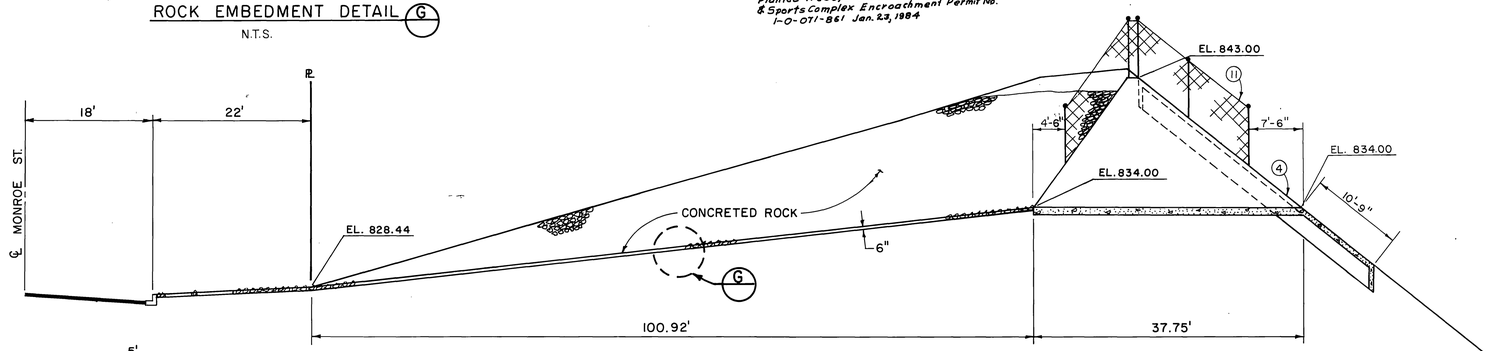


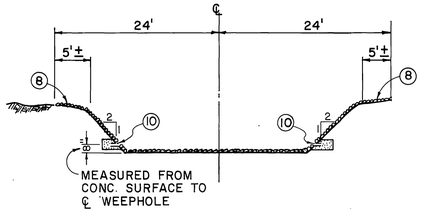


SECTION (D)

N.T.S.

NOTES

(1) PROVIDE 1' CLEARANCE AROUND TREE.

(2) 4' x 4' OPENING AROUND TREES.

(3) POWER POLE & ANCHOR PROTECT IN PLACE.

(4) PRIMARY SPILLWAY SEE DETAILS THIS SHEET.

5 FOR SITE PLAN SEE SHEET 2.

(6) CUTOFF WALL ALL AROUND APRON PER SEC (F)

(7) SLOPE VARIES 1.5:1 TO 2:1.

(8) "WARP" TO MEET EMBANKMENT.

9 STEEL SHALL HAVE 1½" CLEARANCE ON INSIDE WALL & TOP OF SLAB, 2" CLEARANCE ON OUTSIDE WALL, & 3" CLEARANCE ON BOTTOM OF SLAB.

(10) CONSTRUCT 1 1/2" DIA. WEEPHOLES WITH RODENT SCREEN & 1 CU. FT. OF FILTER MATERIAL AT EACH HOLE.

(11) CONSTRUCT 4' CHAIN LINK FENCE.

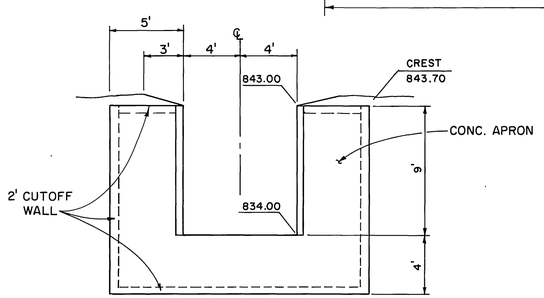


SECTION (E)

5' 0 5'

SECTION (A)

HORIZONTAL 10' 0 10'

VERTICAL 5' 0 5'

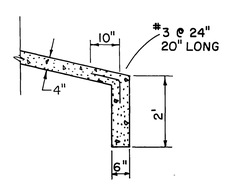


CUTOFF WALL DETAIL

SECTION (F)

N.T.S.

INDEXED 9-3-87 LH, D-526

| REVISIONS | | | |
|---|---|---|---|
| | | | |
| | | | |
| | | | |
| | | | |
| | | | |
| | No Change | | |
| REF. | DESCRIPTION | APPR. | DATE |

RIVERSIDE COUNTY FLOOD CONTROL AND WATER CONSERVATION DISTRICT

DESIGNED BY: C.J.
DRAWN BY: R.A.A.
DATE DRAWN: 3-17-82
CHECKED BY: A.G.K.

APPROVED BY: Kenneth P. Schwartz
CHIEF ENGINEER R.E. NO. 13400
DATE: 4-14-82

# MONROE STORM DRAIN

## SPILLWAY DETAILS

1970 STORM DRAIN BOND ISSUE PROJECT NO. 17

PROJECT NO. 1-0-071
DRAWING NO. 1-417
SHEET NO. 9 OF 36

AS BUILT

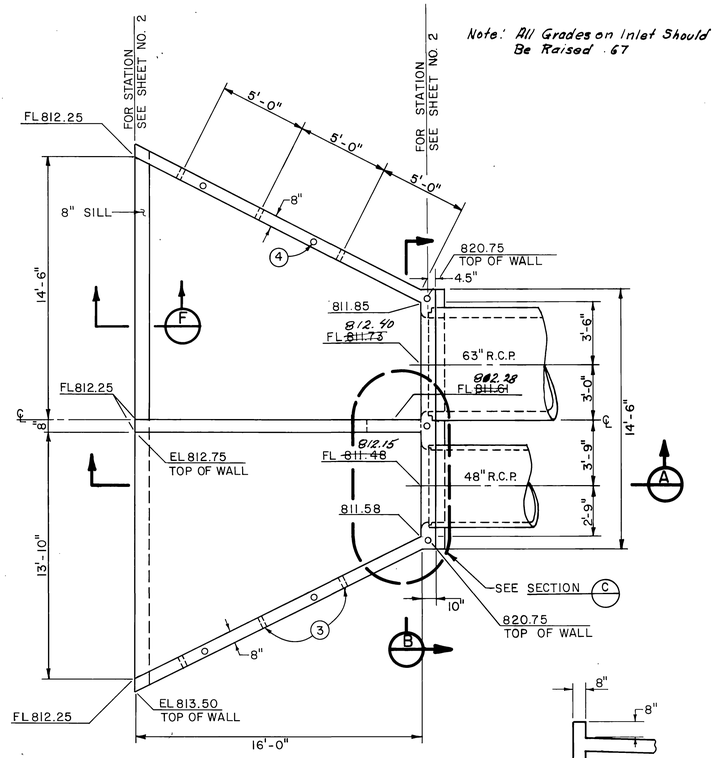


PLAN VIEW

INLET - OUTLET STRUCTURE 6

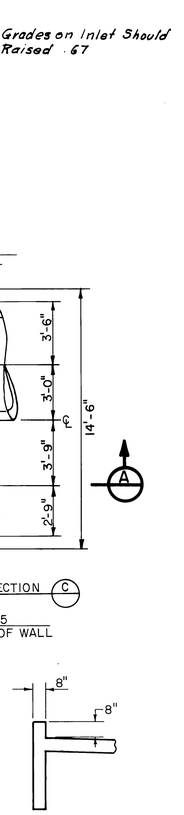


SECTION F

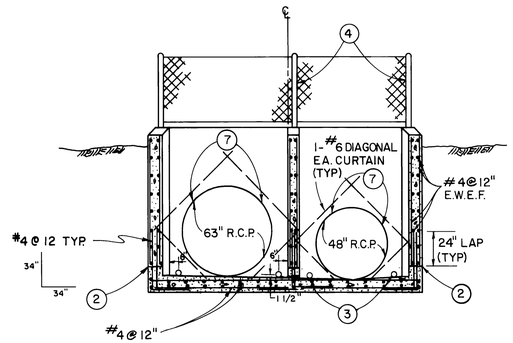


SECTION B

INLET - OUTLET STRUCTURE

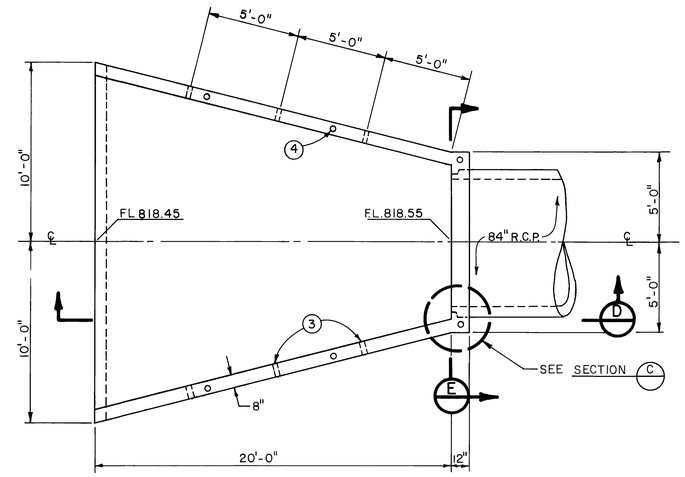


PLAN VIEW

GRATTON OUTLET 5

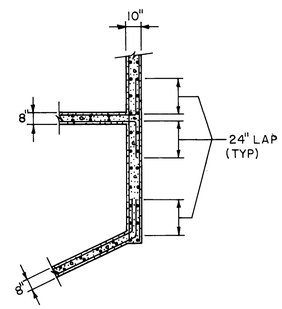


SECTION C

INLET-OUTLET STRUCTURE
INTERSECTING WALL & CORNER DETAILS
TYPICAL ALL CORNERS & INTERSECTIONS

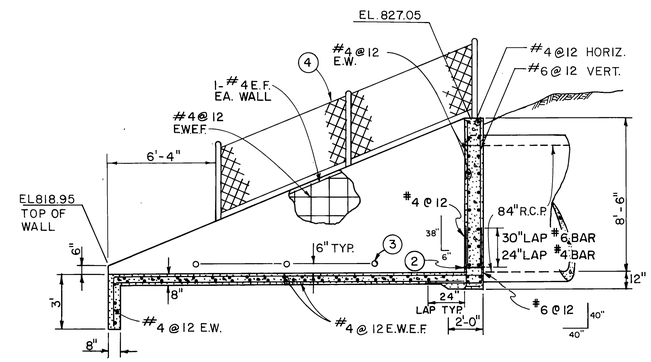


SECTION D

GRATTON OUTLET

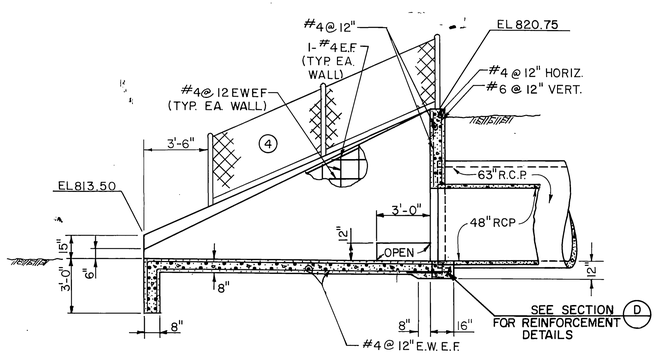


SECTION A

INLET-OUTLET STRUCTURE

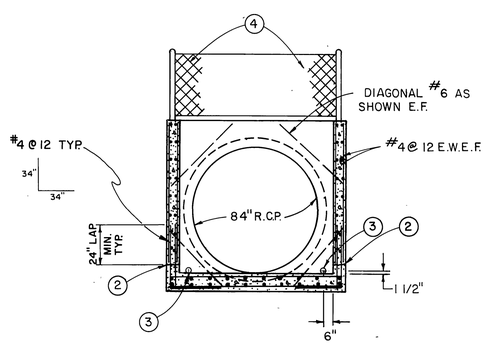


SECTION E

GRATTON OUTLET

## NOTES

1. ALL STEEL SHALL. HAVE 1 1/2" CLEAR COVER ON INSIDE FACE OF WALLS & SLAB, 2" CLEAR COVER ON OUTSIDE FACE OF WALLS & 3" ON BOTTOM FACE OF SLAB.
2. 3 1/2" STARTER WALL WITH CONST. JOINT TO BE USED IN ALL CASES.
3. CONST. 1 1/2" ϕ WEEPHOLES WITH RODENT SCREEN & 1 CU. FT. OF FILTER MAT'L AT EA. HOLE.
4. CONSTRUCT 4' CHAIN LINK FENCE.
5. FOR SITE VIEW OF GRATTON OUTLET SEE SHEETS 3 & 8.
6. FOR SITE VIEW OF THE INLET-OUTLET SEE SHEETS 2 & 4.
7. SEE SHEET 11 FOR INLET/OUTLET PIPE GRATE DETAILS.
8. LAPS REQUESTED BY THE CONTRACTOR FOR HIS CONVENIENCE SHALL BE SUBJECT TO APPROVAL BY THE ENGINEER.

INDEXED 9-3-87 LH
D-526

| REVISIONS | | | |
|---|---|---|---|
| CR | Inlet Elev. Change | SDS | 9/83 |
| REF. | DESCRIPTION | APPR. | DATE |

AS BUILT

RIVERSIDE COUNTY FLOOD CONTROL AND WATER CONSERVATION DISTRICT

DESIGNED BY: J.R.C.
DRAWN BY: R.A.A.
DATE DRAWN: 3-20-82
CHECKED BY:
APPROVED BY: Kenneth F. Edwards
CHIEF ENGINEER R.E. NO. 13400
DATE: 11-14-82

# MONROE STORM DRAIN

INLET/OUTLET STRUCTURE DETAILS

1970 STORM DRAIN BOND ISSUE PROJECT NO. 17

PROJECT NO. 1-0-071
DRAWING NO. 1-417
SHEET NO. 10 OF 36

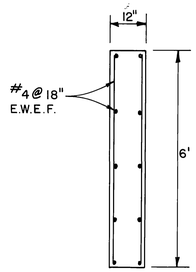


CUTOFF WALL DETAIL

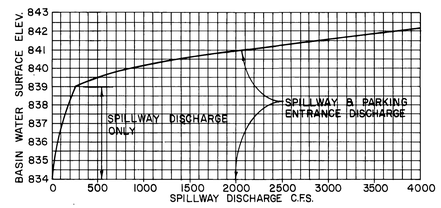


SPILLWAY DISCHARGE CURVE

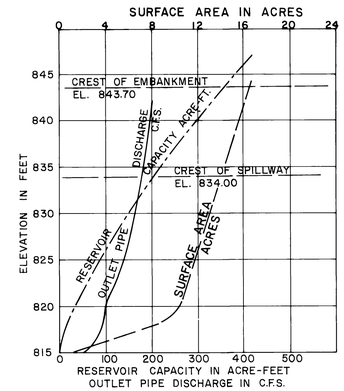


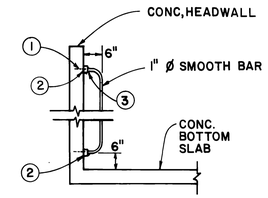


SECTION A-A
N.T.S.

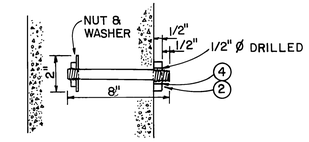


3/8" ANCHOR BOLT DETAIL
N.T.S.

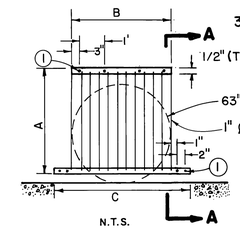


N.T.S.

| PIPE SIZE | A | B | C |
|---|---|---|---|
| 63" | 5'-4" | 5'-8" | 6'-0" |
| 48" | 4'-0" | 4'-2" | 4'-10" |

DIMENSION TABLE

1. ANCHORS INTO HEADWALL & EA. GRATE (TYP.)
2. 1 1/2" x 1/2" BAR (TYP)
3. 1/4" FILLET WELD ALL AROUND (TYP)
4. KEYED NUTS TO BE SUPPLIED BY R.C.F.C.

INLET-OUTLET STRUCTURE GRATE DETAILS

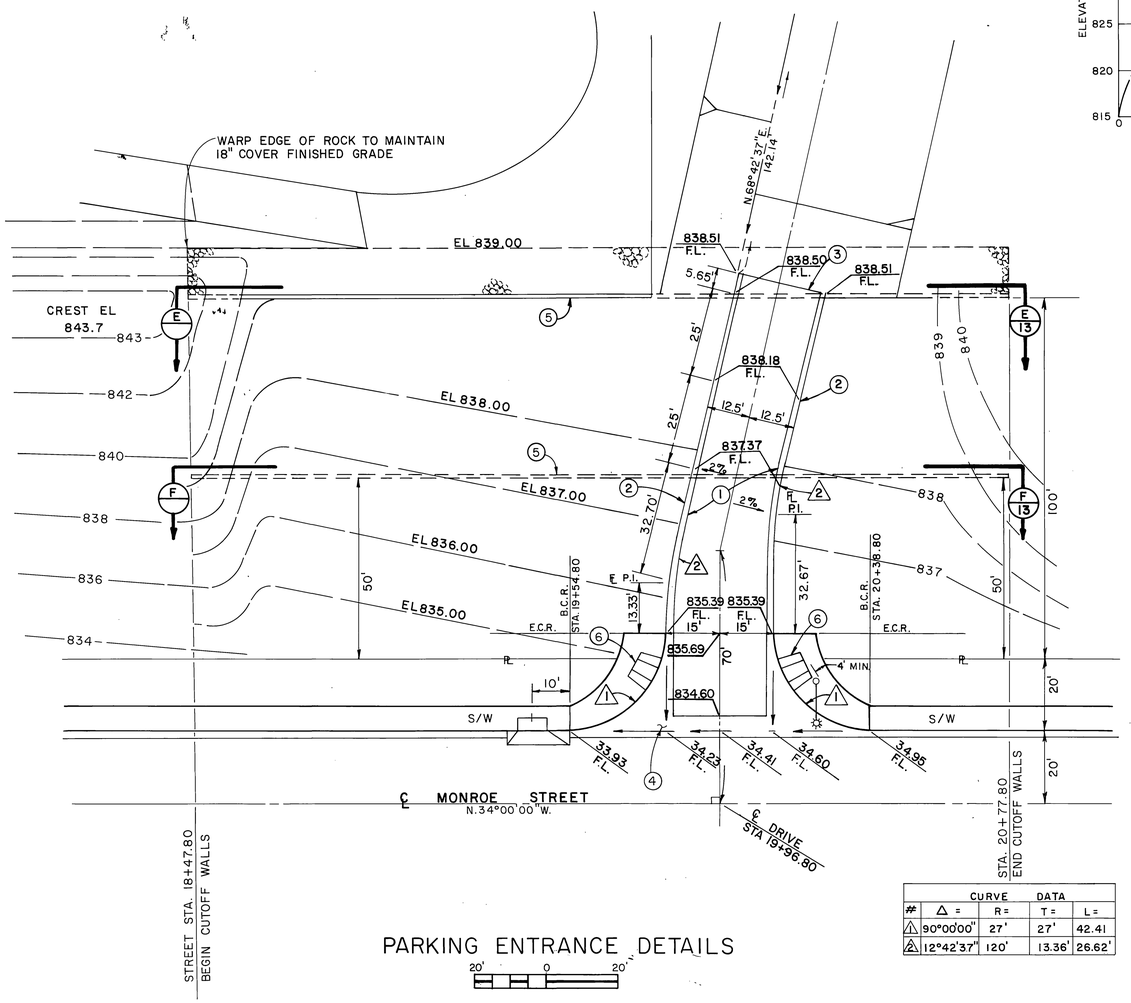


| CURVE DATA | | | | |
|---|---|---|---|---|
| # | Δ = | R= | T= | L= |
| 1 | 90°00'00" | 27' | 27' | 42.41 |
| 2 | 12°42'37" | 120' | 13.36' | 26.62' |

PARKING ENTRANCE DETAILS

20' 0 20'

PARKING ENTRANCE NOTES

1. PLACE 3" A.C. OVER 6" BASE
2. CONST. CURB & GUTTER (6" CURB FACE)
3. 2"x4" REDWOOD HEADER
4. CONST. CONC. CROSS GUTTER. SEE SHEET NO. 33
5. CONST. CONC. CUTOFF WALL, SEE STRUCTURAL DETAILS THIS SHT. & GRADES SHEET NO. 13.
6. CONST. WHEELCHAIR RAMP. SEE SHEET NO. 36

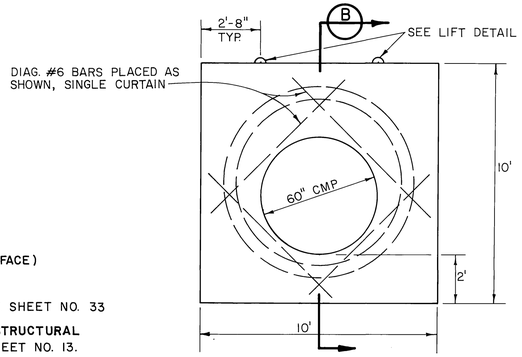


CONCRETE BULKHEAD

3' 0 3'

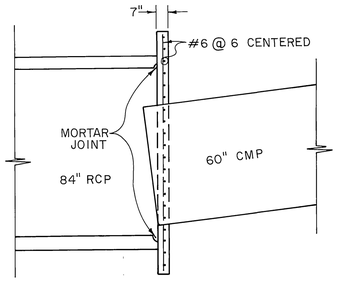


SECTION B

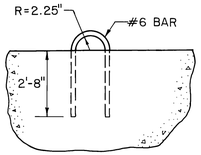


LIFT DETAIL

INDEXED 9-3-87 LFH

D-526

| REVISIONS | | | |
|---|---|---|---|
| REF. | DESCRIPTION | APPR. | DATE |
| | No Change | | |

AS BUILT

RIVERSIDE COUNTY FLOOD CONTROL AND WATER CONSERVATION DISTRICT

DESIGNED BY: C.J.
DRAWN BY: L.J.C.
DATE DRAWN: 2-82
CHECKED BY: A.G.K.

APPROVED BY: Kenneth R. Edwards
CHIEF ENGINEER R.E. NO. 12400
DATE: 4-14-82

MONROE STORM DRAIN

MISCELLANEOUS DETAILS

1970 STORM DRAIN BOND ISSUE PROJECT NO. 17

PROJECT NO. 1-0-071
DRAWING NO. 1-417
SHEET NO. 11 OF 36

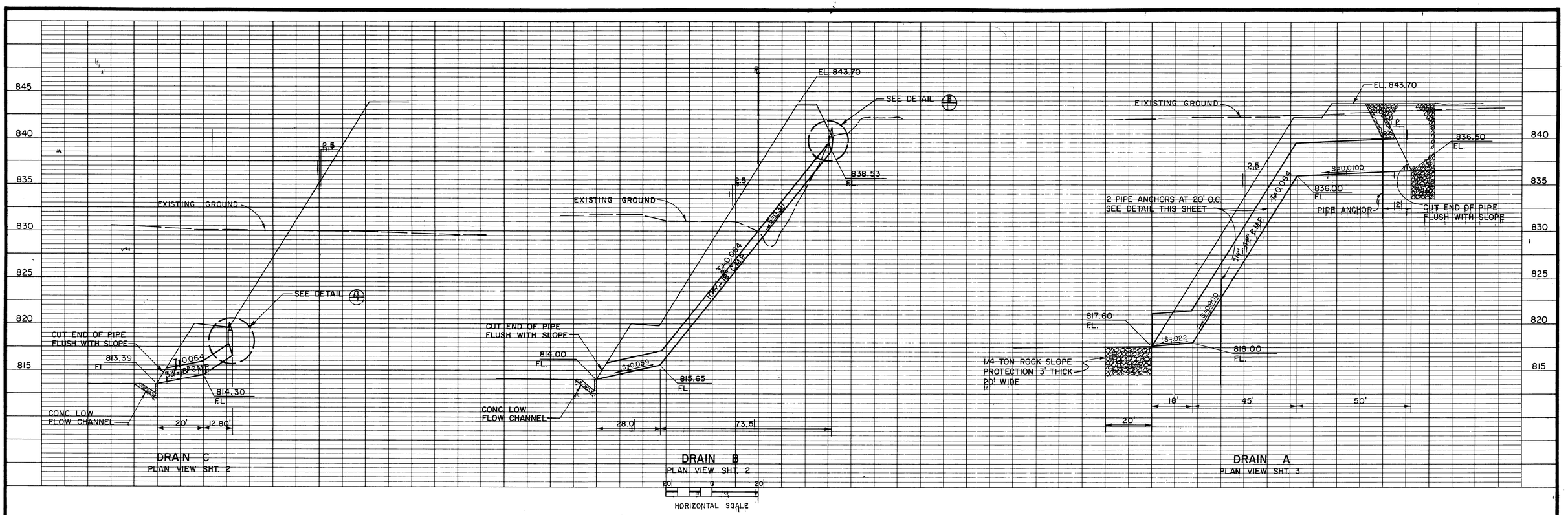


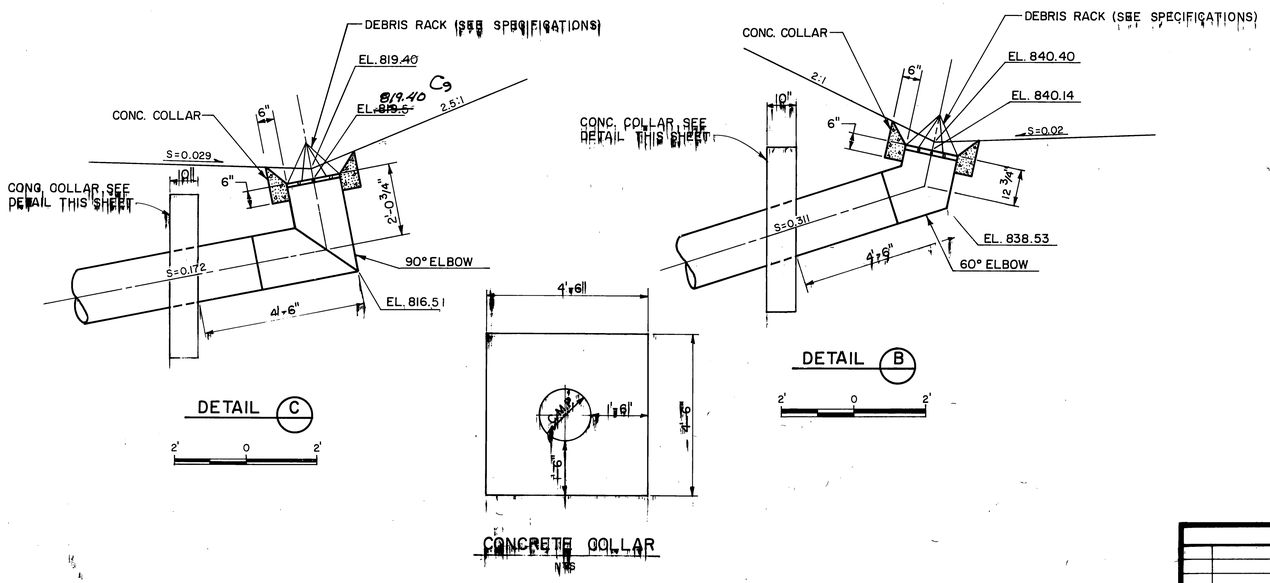


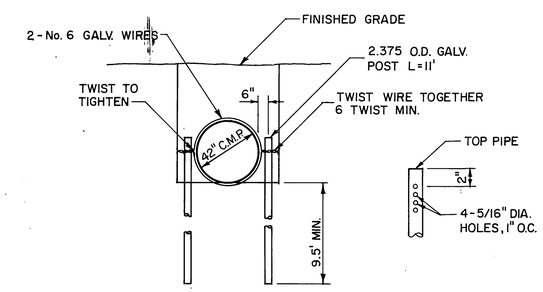


PIPE ANCHORS
NTS

INDEXED 9-3-87 LH
D-526

| REVISIONS | | | |
|---|---|---|---|
| C9 | Elev. Change | | 9/83 |
| REF. | DESCRIPTION | APPR. | DATE |

RIVERSIDE COUNTY FLOOD CONTROL AND WATER CONSERVATION DISTRICT

DESIGNED BY: G.J.
DRAWN BY: R.A.S.
DATE DRAWN: 10-21-81
CHECKED BY: A.G.K.

APPROVED BY: Kenneth P. Edwards
CHIEF ENGINEER R.E. NO. 12400
DATE: 4-14-82

# MONROE STORM DRAIN
## DRAIN PROFILES

1970 STORM DRAIN BOND ISSUE PROJECT NO. 17

PROJECT NO. 1-Q-071
DRAWING NO. 1-417
SHEET NO. 12 OF 36

AS BUILT

NOTE: FOUNDATION EXCAVATION SHALL BE CONTINUOUS AND EXTEND FROM STREET STA. 20+78 ON MONROE STREET TO BASIN STA. 28+00 ALONG THE RAILROAD EMBANKMENT.

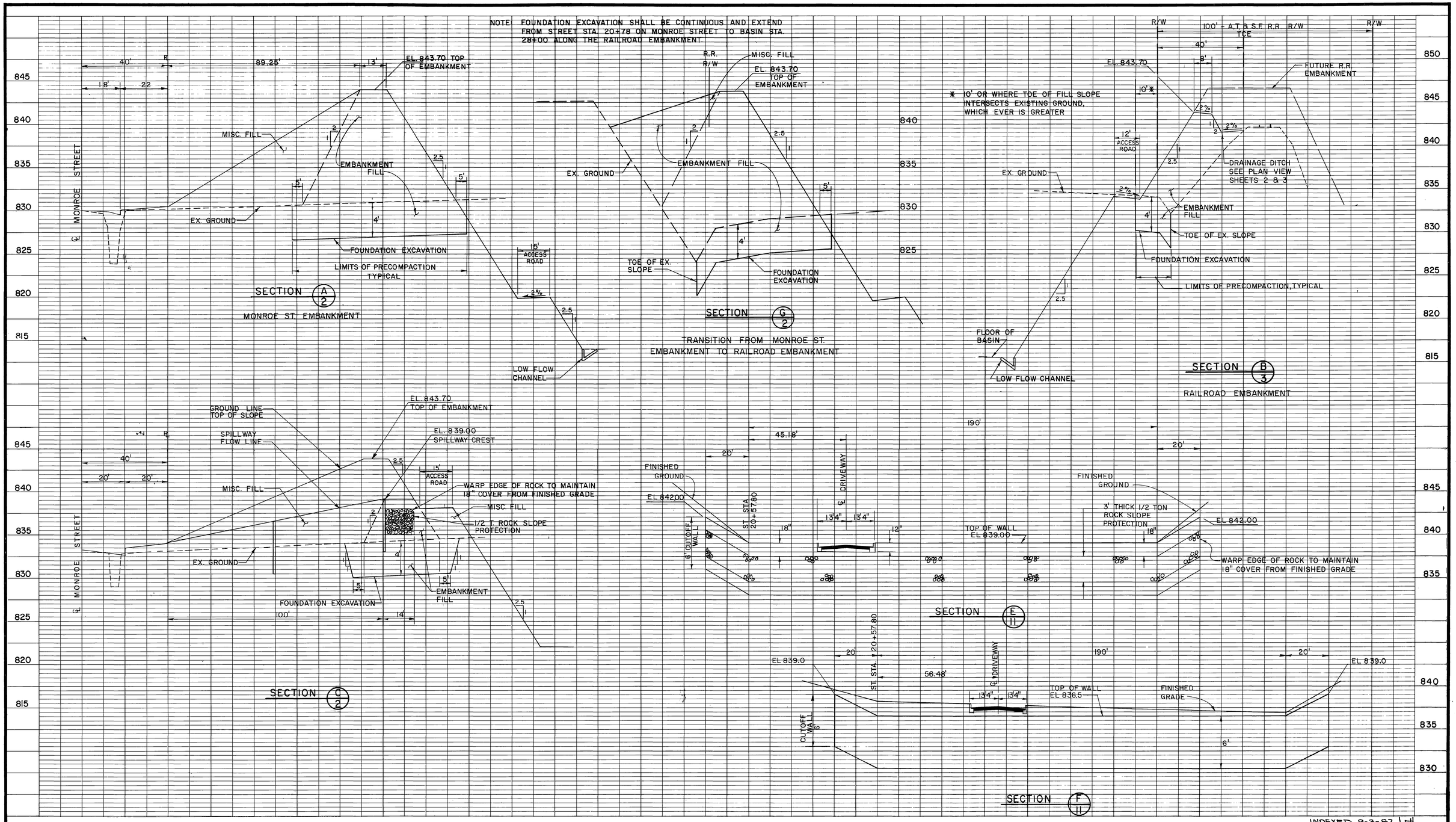


INDEXED 9-3-87 LH
D-526

20' 0 20'
HORIZONTAL SCALE

| REVISIONS | | | |
|---|---|---|---|
| REF. | DESCRIPTION | APPR. | DATE |
| | No Change | | |

AS BUILT

RIVERSIDE COUNTY FLOOD CONTROL AND WATER CONSERVATION DISTRICT

DESIGNED BY: C.J.
DRAWN BY: L.J.C.
DATE DRAWN: 2-82
CHECKED BY: A.G.K.

APPROVED BY: Kenneth P. Schwab
CHIEF ENGINEER R.E. NO. 12400
DATE: 4-14-82

# MONROE STORM DRAIN
## CROSS SECTIONS

1970 STORM DRAIN BOND ISSUE PROJECT NO. 17

PROJECT NO. 1-0-071
DRAWING NO. 1-417
SHEET NO. 13 OF 33