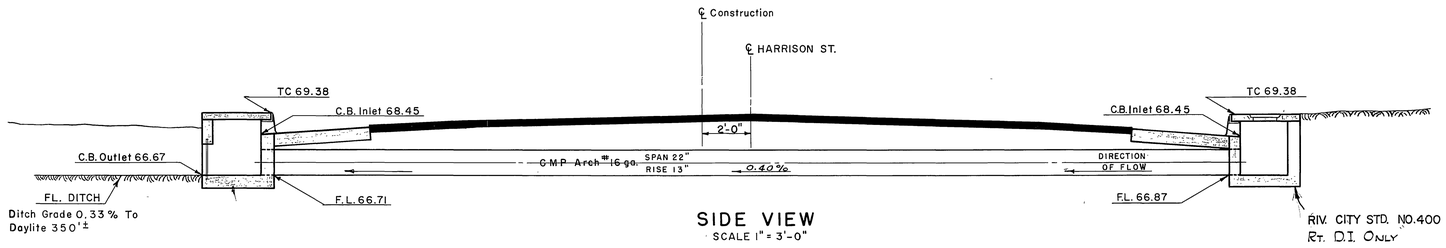

SIDE VIEW
SCALE 1" = 3'-0"

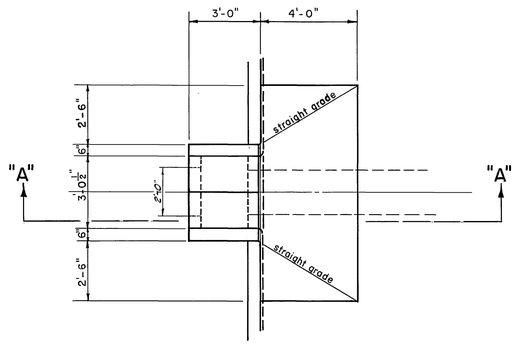

PLAN - LT. D.I.
SCALE 1" = 3'-0"

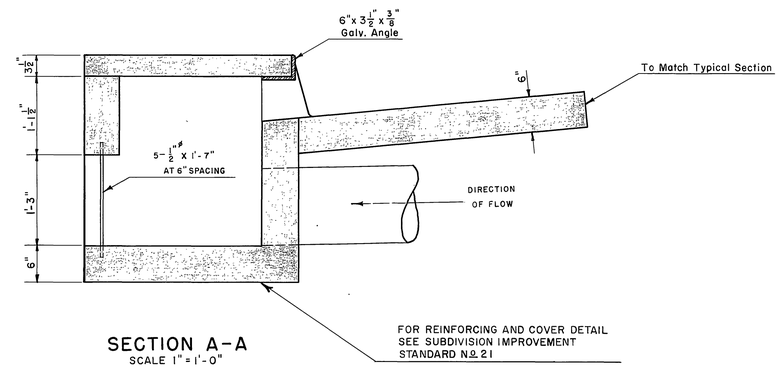

SECTION A-A
SCALE 1" = 1'-0"

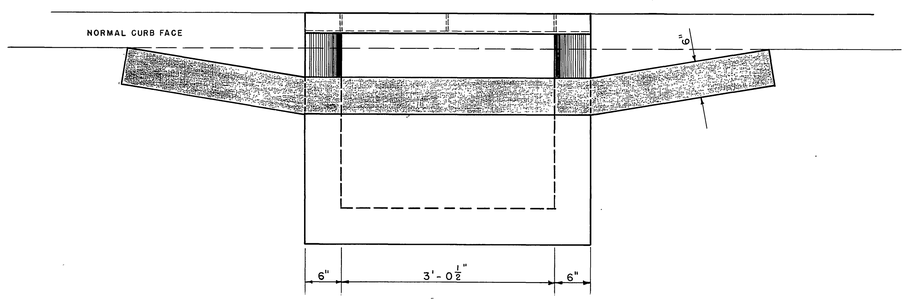

ELEVATION
SCALE 1" = 1'-0"

CITY OF RIVERSIDE CALIFORNIA
DEPARTMENT OF PUBLIC WORKS

COUNTY OF RIVERSIDE
ROAD DEPARTMENT
RIVERSIDE, CALIFORNIA

DETAIL OF DRAINAGE STRUCTURE
AT STATION 12 + 12
Harrison St.

SCALE AS SHOWN	BRIDGE	FILE	DRAWING D-53

DIRECTOR OF PUBLIC WORKS
DATE

INDEXED

150 IMPERIAL TR. CLOTH—K. & E. CO., N. Y.—REG. U.S. PAT. OFF.