RIVERSIDE CALIFORNIA

CITY OF RIVERSIDE — INCORPORATED 1883

PUBLIC WORKS DEPARTMENT

ARIZONA STORM DRAIN LINE C-2

ARIZONA AVENUE TO VICTORIA AVENUE

CONSTRUCTION LEGEND:

CENTER LINE — ℄ —
RIGHT-OF-WAY — R/W —
SUBDIVISION LOT LINE — PL —
TOP OF SLOPE
TOE OF SLOPE
DIRECTION OF FLOW

PIP — PROTECT IN PLACE.

R/1 — REMOVE TREE, CLASS AS NOTED.

SPECIFIC CONSTRUCTION NOTES:

- NUMBERS ABOVE 100 IN A HEXAGON ON THE PLAN REFER TO THE RESPECTIVE STANDARD DRAWING AND SHALL BE CONSTRUCTED ACCORDINGLY, UNLESS MODIFICATIONS ARE NOTED ON THE PLAN. ANY NUMBER SHOWN BELOW THE STANDARD DRAWING NUMBER INDICATES THE SPECIFIC ALTERNATE TO BE CONSTRUCTED.
- 452/II — CONSTRUCT 3' THICK PCC WATER BARRIERS AT 25' O.C. WHEREVER GROUND WATER FLOW IS ENCOUNTERED IN THE STORM DRAIN PIPE TRENCH.
- (1) REMOVE AND SALVAGE EXISTING 48" CMP AND CONCRETE APRON.
- (2) CONSTRUCT TRANSITION STRUCTURE "A" USING CLASS A CONCRETE (4000 PSI) FROM STA. 10+00 TO 10+15 PER RIVERSIDE COUNTY FLOOD CONTROL STD. TS301, DATED MAY 1971 AND CONSTRUCT MH SHAFT AND COVER PER CITY STD. DWG. 432.
- (3) CONST. 84" RCP (1000D) USING CASE II PIPE BEDDING.
- (4) CONST. 87" RCP (1000D) USING CASE II PIPE BEDDING..
- (5) ~~SALVAGE AND DELIVER EXISTING CHAIN LINK FENCE TO CITY CORPORATION YARD AT 8095 LINCOLN AVE.~~
- (6) INSTALL 6' CHAIN LINK FENCE PER STD. DWG. 380. INSTALL TWO GATE KEEPERS AT EACH 15' WIDE DOUBLE GATE.
- (7) REMOVE EXISTING CONCRETE GROUTED RIPRAP CHANNEL.
- (8) CONSTRUCT 8" PVC (SDR 35).
- (9) BACKFILL EXIST. CHANNEL PER TYPICAL SECTIONS.
- (10) CONSTRUCT MH PER STD. DWG. 432, (A=30', B=48", C'=14.7', D_1 &D_2=84", E'=14.2', L'=15.2', EL. R=817.13, EL S=816.60).
- (11) RECONNECT EXISTING 4-6" DIA. SUBDRAIN LINES INTO MANHOLE (STD. DWG. 432) PER SUBDRAIN DETAIL ON SHEET 3.
- (12) DEPRESS UPSTREAM SIDE OF AC INLET APRON TO MATCH THE PROPOSED DITCH FLOW LINE.

GENERAL CONSTRUCTION NOTES:

1. EXISTING UTILITIES SHOWN ON THE PLAN, ARE PLOTTED FROM UTILITY RECORDS. THE CONTRACTOR IS REQUIRED TO TAKE DUE PRECAUTIONARY MEASURES TO LOCATE AND PROTECT ALL UTILITIES WHETHER OR NOT SHOWN ON THIS PLAN.
2. PRIME CONTRACTORS BIDDING THIS WORK SHALL HAVE A CLASS "A", "C-34", OR A "C-42" LICENSE.
3. ALL ELEVATIONS SHOWN ON THE PLANS SHALL BE STAKED IN THE FIELD.
4. ALL CITRUS TREES SHALL BE PROTECTED IN PLACE.
5. BEVELED PIPE IS REQUIRED, FOR THE CURVED PORTIONS OF PIPE ALIGNMENT, WHERE THE MAXIMUM JOINT DEFLECTION, FOR STANDARD PIPE, IS EXCEEDED.
6. ALL DETAILS AND SECTIONS ARE SHOWN LOOKING UPSTREAM.
7. EXTENSIVE EROSION HAS OCCURRED IN THE CHANNEL SINCE SURVEYED IN MARCH 1987. SUBSEQUENT TO CLEARING AND GRUBBING THE EXISTING CHANNEL SHALL BE GRADED AND RESHAPED TO FACILITATE CROSS SECTION RESURVEYING OF THE PROJECT AREA BEFORE AND AFTER (IF NECESSARY) INSTALLATION OF PIPE TO ACCURATELY DETERMINE FINAL EARTHWORK QUANTITIES.

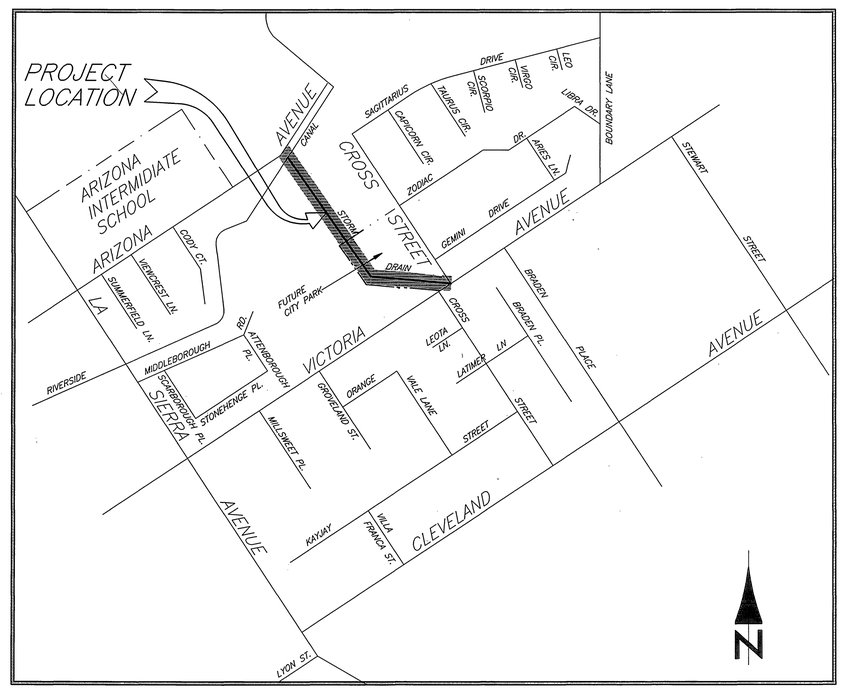

PROJECT LOCATION MAP

0 KM. 0.25 KM. 0.50 KM. 0.75 KM.
0' 250' 500' 1000' 1500' 2000' 2500' 3000'

SCALE: 1" = 500'

EXISTING UNDERGROUND & TOPOGRAPHY LEGEND

EXISTING UNDERGROUND UTILITIES:

SANITARY SEWER — 8"S
WATER LINE — 6"W
STORM DRAIN — 24"SD
GAS LINE — 3"G
ABANDONDED UTILITY — 6"G(ABAN"D.)
TELEPHONE CONDUIT — T
ELECTRICAL CONDUIT — E
ELECTROLIER LIGHTING CONDUIT — ELC
TRAFFIC SIGNAL — SIG
FIRE ALARM — F

EXISTING TOPOGRAPHY:

BLOCK WALL
BOARD FENCE
WIRE FENCE
CHAIN LINK FENCE
TOP OF SLOPE
TOE OF SLOPE
DIRECTION OF FLOW

SANITARY SEWER M.H.
SANITARY SEWER CLEANOUT
STORM DRAIN M.H.
IRRIGATION WEIR
WATER M.H.
GAS M.H.
ELECTRIC M.H.
TELEPHONE M.H.
WATER METER
FIRE HYDRANT
SPRINKLER HEAD
VALVE
AIR VALVE
AIR VENT
BUS STOP SIGN
BLOW-OFF VALVE
IRRIGATION STAND PIPE
CONCRETE
ASPHALT
BUILDING
EDGE OF PAVEMENT
POLE & GUY ANCHOR
POWER POLE
TELEPHONE POLE
TELEPHONE RISER
JOINT USE POLE
PULL BOX
TRAFFIC SIGN
PARKING METER
FIRE ALARM BOX
STREET NAME SIGN
GAS METER
MAIL BOX
FAUCET
WALK-DON'T WALK PEDESTRIAN SIGNAL
ELECTROLYSIS TEST STATION
WHEEL STOP
A.C. BERM
PEDESTRIAN PUSH BUTTON
RAILROAD TRACKS
RAILROAD SIGN
RAILROAD SIGNAL
TRAFFIC SIGNAL
TRAFFIC SIGNAL ON MAST ARM
TRAFFIC SIGNAL CONTROLLER
TRAFFIC SIGNAL PRESSURE DETECTOR
TRAFFIC SIGNAL LOOP DETECTOR
STREET LIGHT & TRAFFIC SIGNAL ON MAST ARM
STREET LIGHT (UPRIGHT)
STREET LIGHT ON MAST ARM
STEEL POST
WOOD POST

IMPORTANT NOTICE

Section 4216/4217 of the Government Code requires a Dig Alert Identification Number to be issued before a "Permit to Excavate" will be valid. For your Dig Alert I.D. Number call Underground Service Alert

TOLL FREE 1-800-422-4133

Two working days berfore you dig.

ENGINEER IN RESPONSIBLE CHARGE

Ronald C. Mueller
RONALD C. MUELLER
R.C.E. 29510 expires 3/31/95
DATE 11/4/94

REGISTERED PROFESSIONAL ENGINEER — RONALD C. MUELLER — NO. 29510 — Expires 3/31/95 — CIVIL — STATE OF CALIFORNIA

MARK	REVISIONS	APPR.	DATE

DESIGNED BY FYL DRAWN BY LFH,RJM CHECKED BY RCM

CITY OF RIVERSIDE
PUBLIC WORKS DEPARTMENT

APPROVED BY	DATE	BY
DEPUTY P.W. DIRECTOR	11/9/94	
PRINCIPAL ENGINEER	11/4/94	
CHIEF P.W. INSPECTOR	11-3-94	
SURVEYOR	10-21-94	
PARKS DEPARTMENT	10-24-94	
STREET SERVICES	10-31-94	
TRAFFIC ENGINEER	11/2/94	

APPROVED BY
PUBLIC WORKS DIRECTOR
DATE 11/9/94

ARIZONA STORM DRAIN LINE C-2
FROM ARIZONA AVE. TO VICTORIA AVE.

ACCOUNT NO. 410-541400-440301-20021

D-573

SHEET 1 OF 3

INDEXED 1-24-95 LH

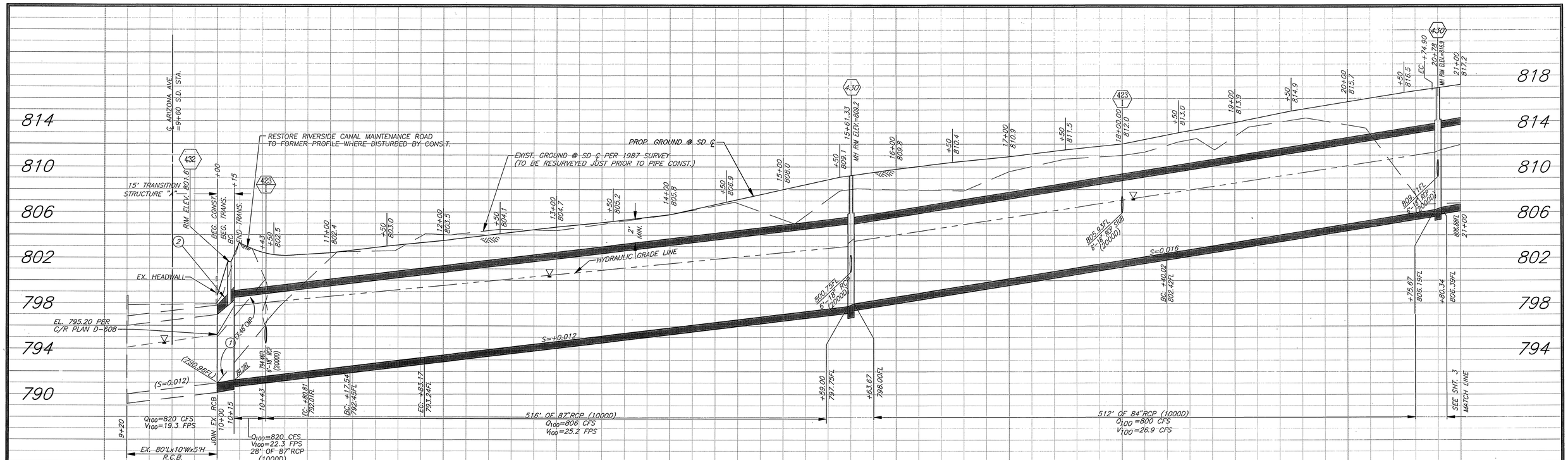

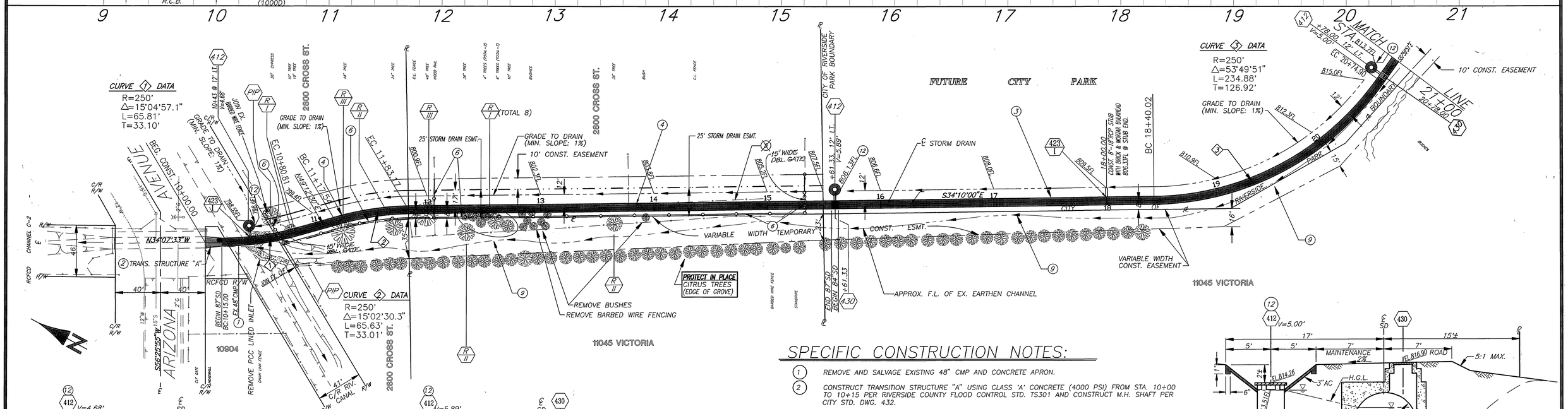

SPECIFIC CONSTRUCTION NOTES:

1. REMOVE AND SALVAGE EXISTING 48" CMP AND CONCRETE APRON.
2. CONSTRUCT TRANSITION STRUCTURE "A" USING CLASS 'A' CONCRETE (4000 PSI) FROM STA. 10+00 TO 10+15 PER RIVERSIDE COUNTY FLOOD CONTROL STD. TS301 AND CONSTRUCT M.H. SHAFT PER CITY STD. DWG. 432.
3. CONST. 84" RCP (1000D) USING CASE II PIPE BEDDING..
4. CONST. 87" RCP (1000D) USING CASE II PIPE BEDDING.
5. ~~SALVAGE AND DELIVER EXISTING CHAIN LINK FENCE TO CITY CORPORATION YARD AT 8095 LINCOLN AVE.~~
6. INSTALL 6' CHAIN LINK FENCE PER STD. DWG. 380. INSTALL TWO GATE KEEPERS AT EACH 15' WIDE DOUBLE GATE.
9. BACKFILL EXIST. CHANNEL PER TYPICAL SECTIONS.
12. DEPRESS UPSTREAM SIDE (ONLY) OF AC INLET APRON TO MATCH THE PROPOSED DITCH FLOW LINE.

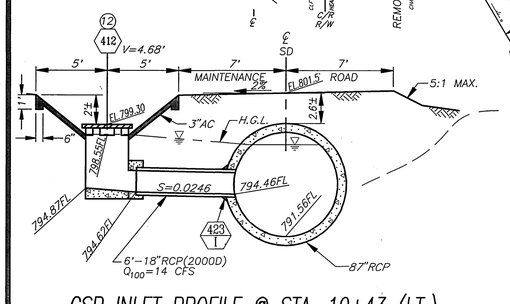

CSP INLET PROFILE @ STA. 10+43 (LT.)
SCALE : 1" = 5'

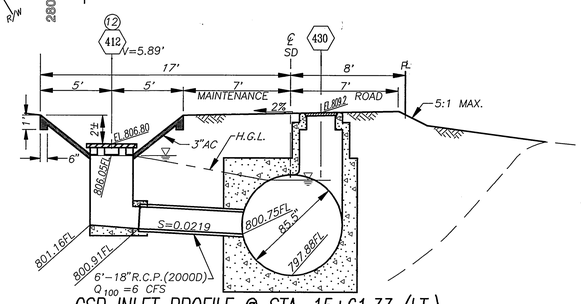

CSP INLET PROFILE @ STA. 15+61.33 (LT.)
SCALE : 1" = 5'

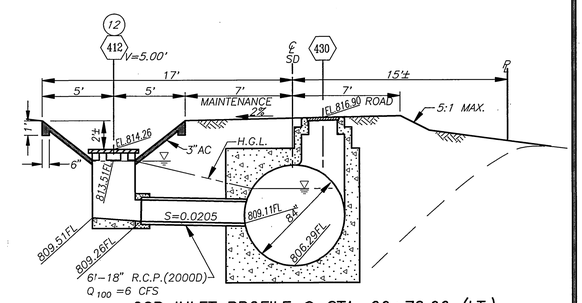

CSP INLET PROFILE @ STA. 20+78.00 (LT.)
SCALE : 1" = 5'

MARK	REVISIONS	APPR.	DATE		

DESIGNED BY FYL DRAWN BY LFH,RJM CHECKED BY RCM

CITY OF RIVERSIDE
PUBLIC WORKS DEPARTMENT

APPROVED BY	DATE	BY
DEPUTY P.W. DIRECTOR	11/7/94	
PRINCIPAL ENGINEER	11/4/94	
CHIEF P.W. INSPECTOR	11-2-94	
SURVEYOR	10-26-94	
PARKS DEPARTMENT	10-26-94	
STREET SERVICES	10-31-94	
TRAFFIC ENGINEER	10/24/94	

APPROVED BY
PUBLIC WORKS DIRECTOR
DATE 11/9/94

ARIZONA STORM DRAIN LINE C-2

FROM ARIZONA AVE. TO VICTORIA AVE.

HORIZ. SCALE: 1"=40' VERT. SCALE: 1"=4'

ACCOUNT NO. 410-541400-440301-20021

D-573

SHEET 2 OF 3

INDEXED 1-24-95 GH

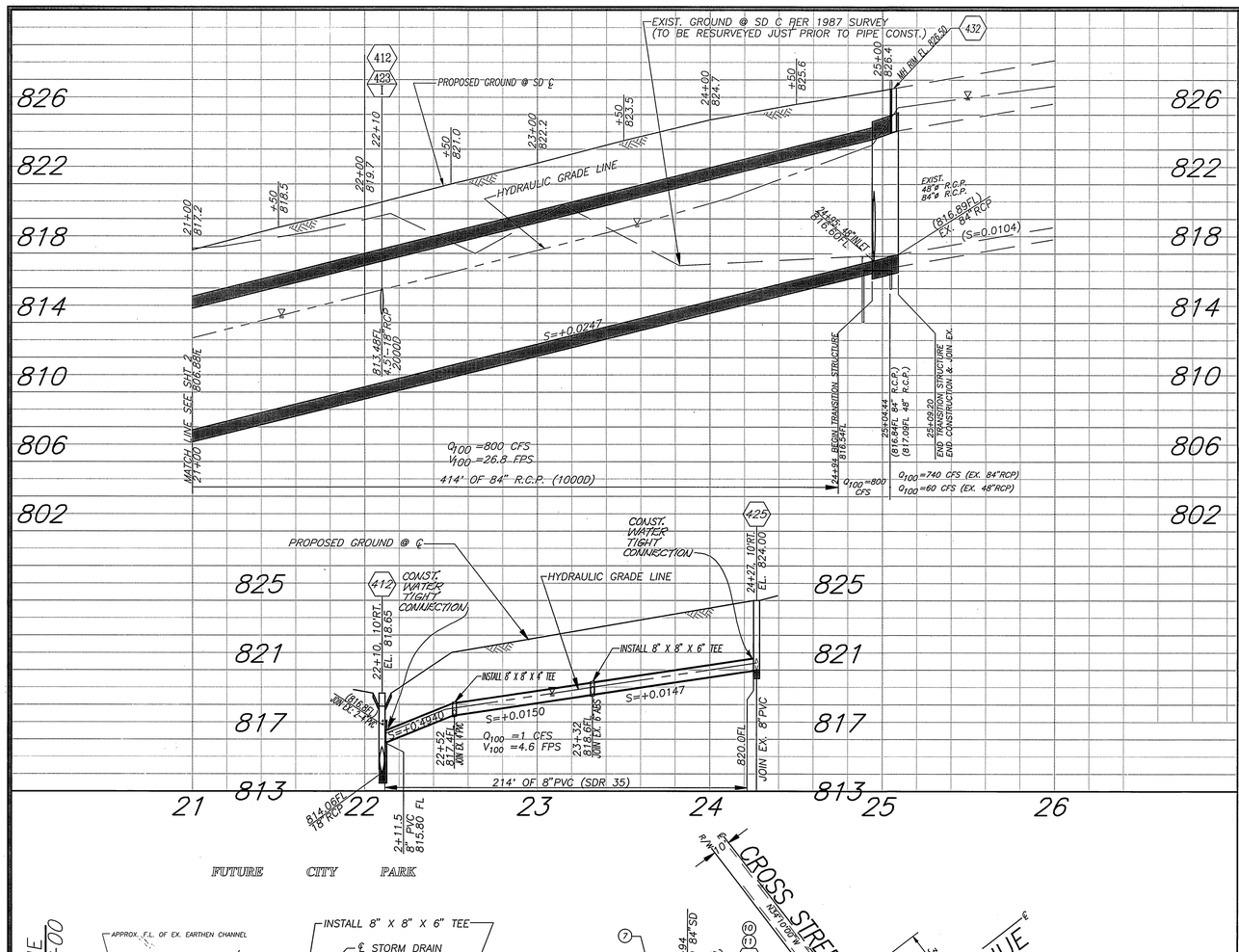

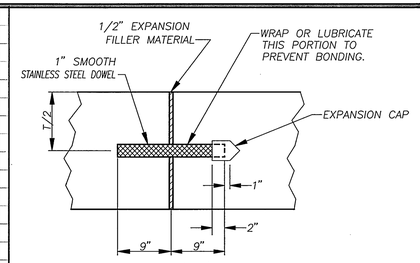

TRANSVERSE EXPANSION JOINT AT STA. 10+00

NTS

NOTE:
1. DOWELS SHALL BE PLACED @ 12" SPACING, CENTERED IN THE MIDDLE 1/3 OF THE TOP & BOTTOM SLABS & AT 12" SPACING ALONG THE MIDDLE 1/3 OF THE SIDEWALLS.
2. INSTALL A MINIMUM OF 3 DOWELS PER TOP SLAB, BOTTOM SLAB & SIDEWALLS.
3. TO BE USED ONLY AT THE JOINT BETWEEN EXISTING 5'X10' RCB AT STA 10+00.

STREET			ARIZONA AVE.	
		STATION	10+00	10+15
		SPAN	10'	7.25'
		RISE	5'	7.25'
BOXED ENDS	CONC.	T1	10"	12"
		T2	10"	12"
		T3	10"	12"
	REINFORCEMENT "a"	SPACING	10"	
		BAR #	5	
	REINFORCEMENT "b"	SPACING	5"	
		BAR #	5	
	REINFORCEMENT "c"	SPACING	5"	
		BAR #	5	
	REINFORCEMENT "d"	SPACING	10"	
		BAR #	4	

REINFORCEMENT TABLE

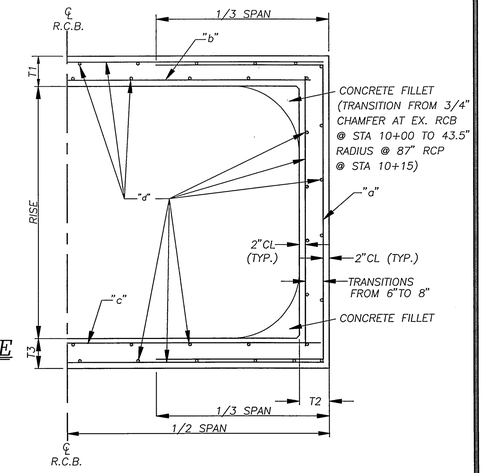

TRANSITION STRUCTURE "A"

STA. 10+00 TO 10+15

NTS

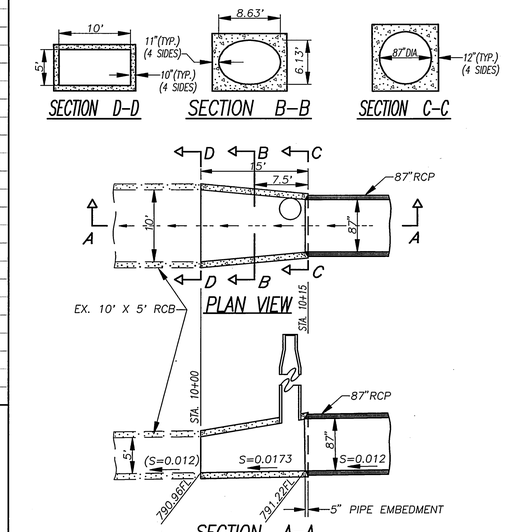

TRANSITION STRUCTURE STA. 10+00 TO 10+15

SCALE : 1" = 10'

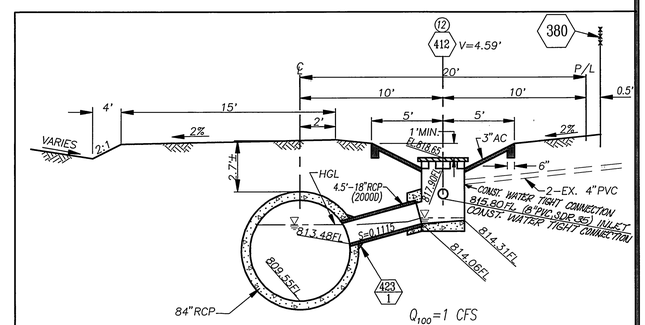

CSP INLET PROFILE @ STA. 22+10 (RT.)

SCALE : 1" = 5'

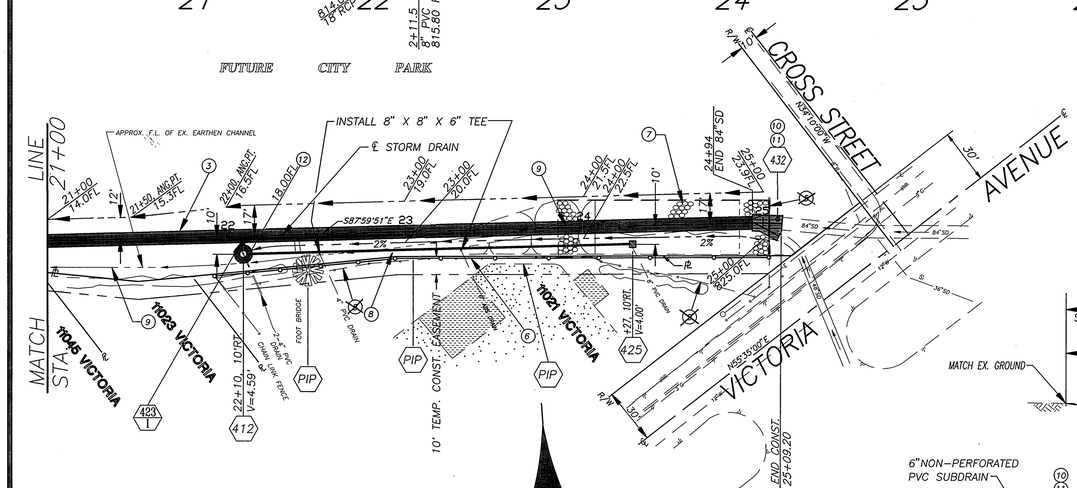

SPECIFIC CONSTRUCTION NOTES:

3. CONST. 84" RCP (1000D) USING CASE II PIPE BEDDING.
4. CONSTRUCT 87" RCP (1000D) USING CASE II PIPE BEDDING.
5. ~~SALVAGE AND DELIVER EX. CHAIN LINK FENCE TO CITY CORP. YARD AT 8095 LINCOLN AVE.~~
6. INSTALL 6' CHAIN LINK FENCE PER STD. DWG. 380.
7. REMOVE INTERFERRING PORTIONS OF EXISTING CONCRETE GROUTED RIPRAP CHANNEL.
8. CONSTRUCT 8" PVC (SDR 35).
9. BACKFILL EXIST. CHANNEL PER TYPICAL SECTIONS.
10. CONSTRUCT MH PER STD. DWG. 432. (A=30', B=48", C'=14.7', D_1 & D_2=84", E'=14.2', L'=15.2', EL. R=817.13, EL. S=816.60)
11. RECONNECT EXISTING 4-6" DIA. SUBDRAIN LINES INTO MANHOLE (STD. DWG. 432) PER SUBDRAIN DETAIL AT RIGHT.
12. DEPRESS UPSTREAM SIDE OF AC INLET APRON TO MATCH THE PROPOSED DITCH FLOW LINE.

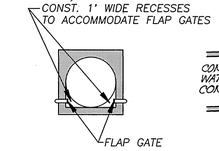

SECTION E-E

SCALE : 1" = 10'

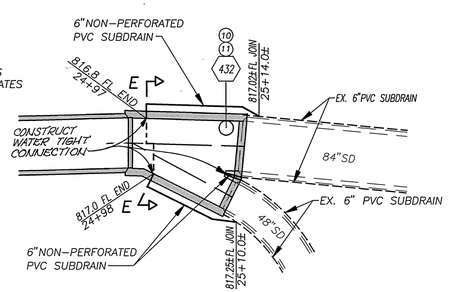

SUBDRAIN DETAIL

STA. 25+00 SCALE : 1" = 10'

NOTE: THE 4 - 6" FLAP GATES AT EX. HEADWALL NEAR VICTORIA AVE. SHALL BE SALVAGED AND INSTALLED INSIDE JUNCTION STRUCTURE AT ENDS OF 6" SUBDRAINS.

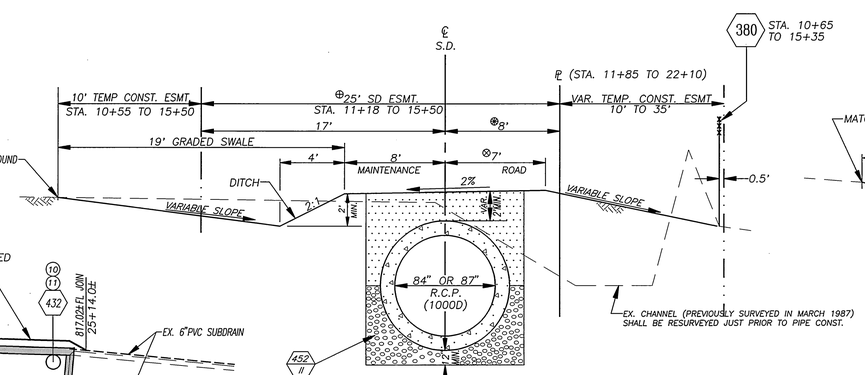

STORM DRAIN NTS

STA. 10+55± TO 22+10±

⊗VAR. FROM 10' TO 8' BETWEEN STA.10+80.81 TO 11+17.54
VAR. FROM 8' TO 24' BETWEEN STA. 18+40.02 TO 22+10
⊕VAR. FROM 27' TO 25' BETWEEN STA. 10+80.81± TO STA. 11+17.54
⊗TRANSITION FROM 7' TO 2' BETWEEN STA. 21+50 TO 22+00

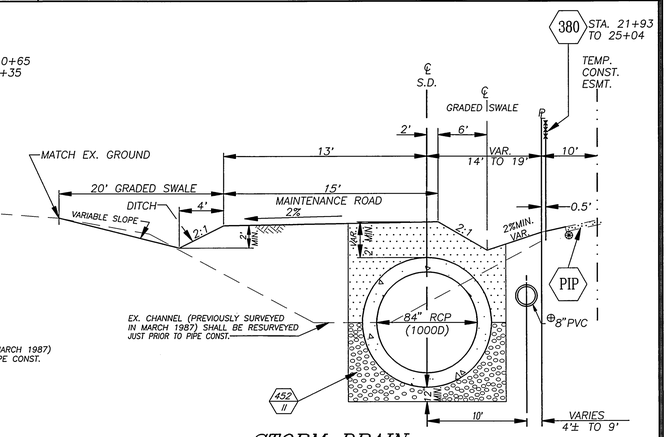

STORM DRAIN NTS

FROM STA. 22+10± TO 24+94±
⊕ FROM STA. 22+12 TO 24+25
⊗ FROM STA. 23+35 TO 23+90

MARK	REVISIONS	APPR.	DATE

DESIGNED BY FYL DRAWN BY LFH,BJM CHECKED BY RCM

REGISTERED PROFESSIONAL ENGINEER RONALD C. MOORE No. 29910 Expires: 3/31/95 CIVIL STATE OF CALIFORNIA

CITY OF RIVERSIDE
PUBLIC WORKS DEPARTMENT

APPROVED BY	DATE	BY
DEPUTY P.W. DIRECTOR	11/2/94	
PRINCIPAL ENGINEER	11/2/94	
CHIEF P.W. INSPECTOR	11-3-94	
SURVEYOR	10-26-94	
PARKS DEPARTMENT	10/26/94	
STREET SERVICES	10/26/94	
TRAFFIC ENGINEER	10/26/94	

APPROVED BY
PUBLIC WORKS DIRECTOR
DATE 11/5/94

ARIZONA STORM DRAIN LINE C-2

FROM ARIZONA AVE. TO VICTORIA AVE.

HORIZ. SCALE: 1"=40' VERT. SCALE: 1"=4'

ACCOUNT NO. 410-541400-440301-20021

D-573

SHEET 3 OF 3

INDEXED 1-24-95