TRACT 22653

STORM DRAIN PLANS

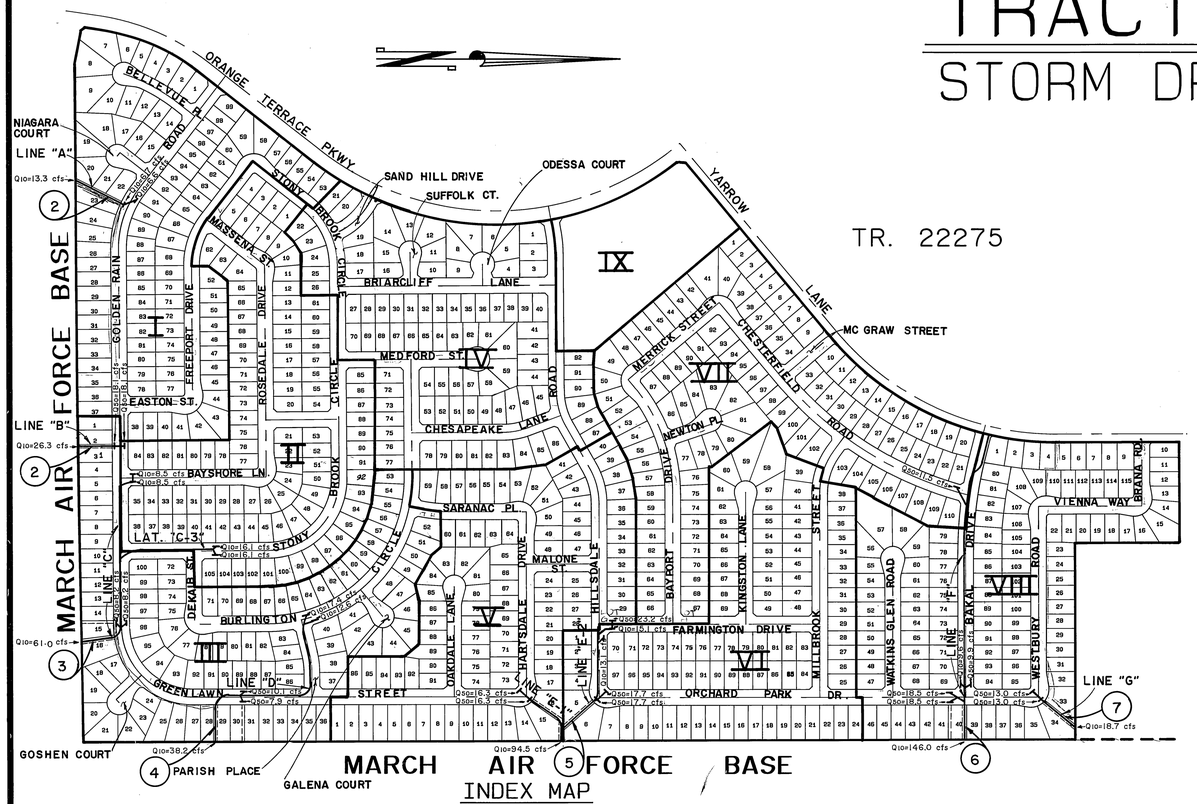

MARCH AIR FORCE BASE

INDEX MAP

SCALE: 1" = 300'

(1) INDICATES SHEET NO.

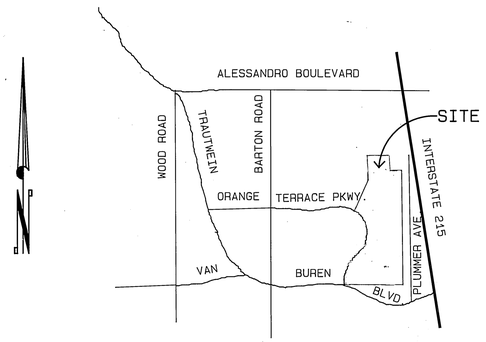

VICINITY MAP

N.T.S.

GENERAL NOTES

1. Quantities shown are for information only and the City of Riverside is not responsible for their accuracy.
2. Construction shall be in accordance with the City of Riverside Dept. of Public Works, Standard Drawings, Standard Drawing No. 10, and the Standard Specifications for Public Works Construction, Current Edition.
3. It shall be the responsibility of the contractor to clear the right of way in accordance with the provisions of law as it affects each utility including irrigation lines and appurtenances and at no cost to the City.
4. Notice to contractor. The existence and location of any underground utility pipes or structures shown on these plans were obtained by a search of the available records. To the best of our knowledge there are no existing utilities exept as shown on these plans. The contractor is required to take precautionary measures to protect the utility lines shown and any other lines not of record or not shown on these plans.
5. The private engineer signing these plans is responsible for assuring the accuracy and acceptability of the work hereon. In the event of discrepancies arising during construction, the private engineer shall be responsible for determining an acceptable solution and revising the plans for approval by the City.
6. The contractor shall call in a locations request to UNDERGROUND SERVICE ALERT (USA), Phone No. 1-800-422-4133, two working days before digging. No construction permit will be issued by the Public Works Department involving excavation for underground facilities unless the applicant has been provided an Inquiry Identification Number by U.S.A.
7. The developer preparing these plans shall be responsible for preserving or re-establishing and referencing survey monuments destroyed, disturbed or buried as a result of construction shown hereon.
8. All embankment fill shall be compacted to minimum of 90% maximum dry density and shall be of an approved quality.
9. Developer to give Western Municipal Water District five (5) working days written notice prior to start of construction and to allow W.M.W.D. ten (10) working days for completion of work (780-4170).
10. Before the Rip-Rap is accepted, as placed, at the outlet of any drainage structure, it shall be tested under flows as close as possible to design conditions with water obtained from fire hydrants in the immediate area.
11. All flagged elevations shall be staked in the field by the private engineer.
12. Contractor agrees that he shall assume sole and complete responsibility for job site conditions during the course of construction of this project, including safety of all persons and property; that this requirement shall apply continuously and not be limited to normal working hours; and that the contractor shall defend, indemnify and hold the owner and the engineer harmless from any and all liability, real or alleged, in connection with performance of work on this project, excepting for liability arising from the sole negligence of the owner or the engineer.
13. All C.I.P.P. shall have a minimum strength of 3000 psi.
14. All "L" dimensions shown on plans shall be inside clear distance between wingwalls.

CONSTRUCTION NOTES

(1)	Construct M.H. "AX" per City Std. No. 430	2 EA.
(2)	Construct M.H. "EZ" per City Std. No. 431	2 EA.
(3)	Construct M.H. "JM" per City Std. No. 432	7 EA.
(4)	Construct M.H. and T.S. per detail on sheet no.9	1 EA.
(5)	Construct J.S. "B" per City Std. No. 421	3 EA.
(6)	Construct J.S. "C" per City Std. No. 422.	4 EA.
(7)	Construct 18" R.C.P. (D-2000)	541 L.F.
(8)	Construct 24" R.C.P. (D-1350)	246 L.F.
(9)	Construct 24" R.C.P. (D-1750)	858 L.F.
(10)	Construct 30" R.C.P. (D-1000)	618 L.F.
(11)	Construct 30" R.C.P. (D-1500)	252 L.F.
(12)	Construct 30" R.C.P. (D-1750)	686 L.F.
(13)	Construct 36" R.C.P. (D-1500)	708 L.F.
(14)	Construct 42" R.C.P. (D-1400)	720 L.F.
(15)	Construct 54" R.C.P. (D-1000)	765 L.F.
(16)	Construct Catch Basin per City Std. No. 405.	28 EA.
(17)	Construct Concrete Collar per City Std. No. 424.	2 EA.
(18)	Construct Pipe Headwall per Caltrans Std. D 89 (see sheet 10).	1 EA.
(19)	Construct Pipe Headwall per Caltrans Std. D 90 (see sheet 10).	5 EA.
(20)	Construct Type "A" Pipe Wingwalls per Caltrans Std. D 90 (see sheet 10).	160 CY.
(21)	Construct 14'x14' Box Culvert per Caltrans Std. D 80 (see sheet 10).	40 CY.
(22)	Construct Type "A" Box Culvert Wingwalls per Caltrans Std. D 84 (see sheet 10).	18 CY.
(23)	Construct Parapet per Caltrans Std. D 83 (see sheet 9).	0.3 CY.
(24)	Construct Access Steps at All Outlet Structures per Caltrans Std. D 72 (see sheet 8) Do not locate steps @ pipe or box openings.	7 EA.
(25)	Construct min. 3" thick Gunite swale at slope as shown on plans.	11. CY.
(26)	Construct M.H. "JM" per City Std. No. 432 with Pressure M.H. Shaft and Pressure M.H. Frame and Cover per detail (see sheet 11).	1 EA.
(27)	Construct 6' chain link fence with an access gate around all outlet structures per City Std. No. 380 and per detail on Sht. 11.	451 L.F.
(28)	Construct 4' retaining wall per City Std. No. 707.	120 L.F.
(29)	Construct catch basin Per City Std. No. 405 modified. Downstream connector pipe located 1.5 ft. right of ℄ catch basin.	1 EA.
(30)	Install 1/4 ton Rip-rap per plan & per detail on sheet 11.	TON
(31)	Construct modified type "A" wingwall per Caltrans std. D90 see details on sheet 2 and 10.	1 EA.

QUANTITIES

AS BUILT 6/16/97 RJM

CITY OF RIVERSIDE, CALIFORNIA
DEPARTMENT OF PUBLIC WORKS

APPROVED BY	BY	DATE
PRINCIPAL ENGINEER	—	—
PARK DEPARTMENT	—	—
TRAFFIC DIVISION	—	—
CHIEF P.W. ENGR.	RMG	6/5/90
	[illegible]	6/7/90

APPROVED BY: [signature]
DIRECTOR OF PUBLIC WORKS
DATE 6/7/90

Underground Service Alert
DIAL BEFORE YOU DIG
Call: TOLL FREE
1-800
422-4133
TWO WORKING DAYS BEFORE YOU DIG

PRIVATE ENGINEERING NOTE

CONSTRUCTION CONTRACTOR AGREES THAT IN ACCORDANCE WITH GENERALLY ACCEPTED CONSTRUCTION PRACTICES, CONSTRUCTION CONTRACTOR WILL BE REQUIRED TO ASSUME SOLE AND COMPLETE RESPONSIBILITY FOR JOB SITE CONDITIONS DURING THE COURSE OF CONSTRUCTION OF THE PROJECT, INCLUDING SAFETY OF ALL PERSONS AND PROPERTY; THAT THIS REQUIREMENT SHALL BE MADE TO APPLY CONTINUOUSLY AND NOT BE LIMITED TO NORMAL WORKING HOURS, AND CONSTRUCTION CONTRACTOR FURTHER AGREES TO DEFEND, INDEMNIFY AND HOLD DESIGN PROFESSIONAL HARMLESS FROM ANY AND ALL LIABILITY, REAL OR ALLEGED, IN CONNECTION WITH THE PERFORMANCE OF WORK ON THIS PROJECT, EXCEPTING LIABILITY ARISING FROM THE SOLE NEGLIGENCE OF DESIGN PROFESSIONAL

MARK	REVISIONS	APPR.	DATE
1	ADDED CONSTRUCTION NOTE 31	FBED	5/14/97

DESIGNED BY ASW DRAWN BY DP CHECKED BY ALR

REGISTERED PROFESSIONAL ENGINEER — JOHN W. CANTY — No. 17550 — Exp. 6/30/93 — CIVIL — STATE OF CALIFORNIA

PREPARED UNDER THE DIRECTION OF: [signature] 17550
6-30-93 DATE 7/18/89

APPROVED BY: [signature]
DATE: [signature]

SCALE AS SHOWN
DATE APR 1989

J.F. Davidson Associates, Inc.
ENGINEERING PLANNING SURVEYING ARCHITECTURE LANDSCAPE ARCHITECTURE
3880 Lemon Street, Suite 101, Riverside, CA 92502, (714) 686-0844, FAX 714-686-5954
11200 S. Mt. Vernon Ave., Suite "D", Colton, CA 92324, (714) 825-1082
73-080 El Paseo, Suite 106, Palm Desert, CA 92260, (619) 346-5691, FAX 619-340-0529

BENCH MARK: V.B. 10-64 ELEV. 1700.670 DATE: 1971 BRASS DISK FLUSH & MARKED V.B. 10-64, 0.6 MI. E. ON VAN BUREN BLVD. FROM CL INT. OF VAN BUREN & WOOD RD., 205' N. OF VAN BUREN @ THE N.E. SIDE OF GRANITE BOULDERS, ON TOP OF 3'x15'x18' BOULDER

STORM DRAIN IMPROVEMENT PLANS
TRACT 22653
TITLE SHEET
1 OF 11 SHEETS
D-576

FOR S.I.C. CORP.
W.O. F.B. FILE NO. 8911168

INDEXED 7-3-90 GH

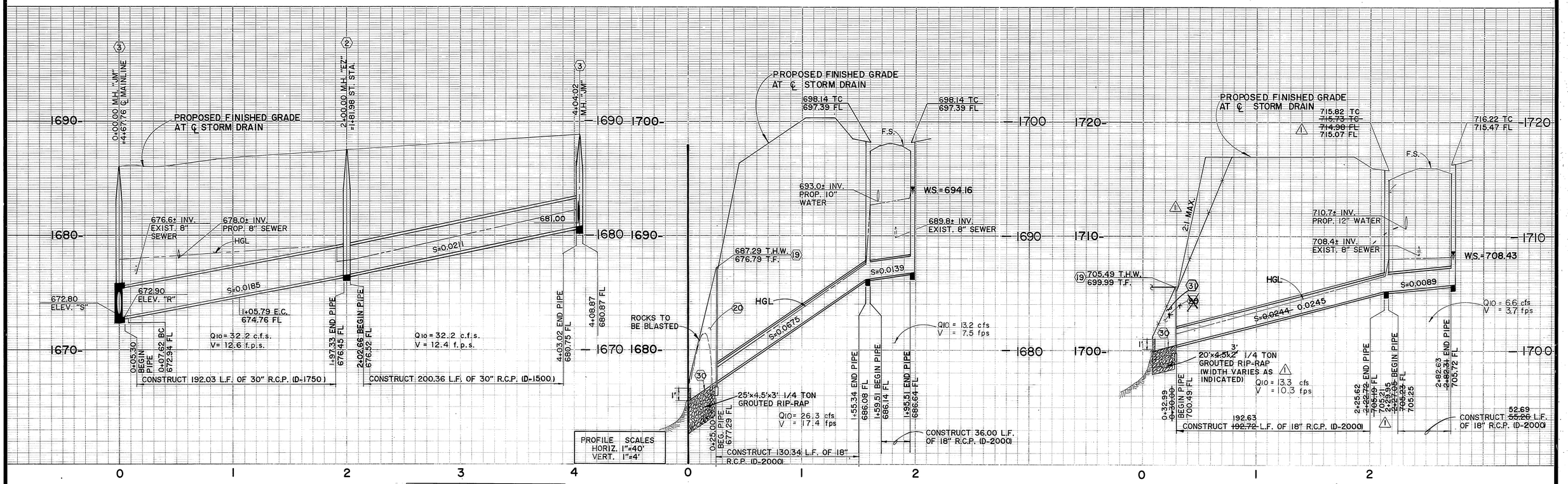

M.H. "JM" 4+04.02	LAT. "C-5"	LAT. "C-6"
A	45°00'00"	53°07'48"
B	24"	24"
C'	4.95'	4.29'
D1	-	-
D2	30"	30"
E'	4.85'	4.19'
L'	5.85'	5.19'

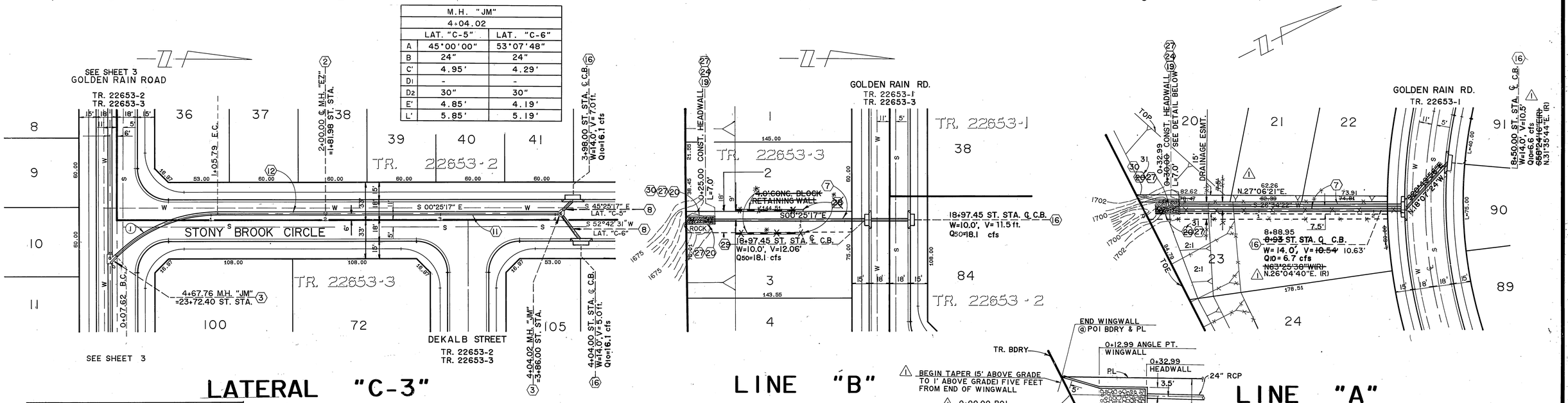

℄ S.D. CURVE DATA				
No.	Δ	R	L	T
(1)	45°00'00"	125.00'	98.17'	51.78'

LATERAL "C-3"

LINE "B"

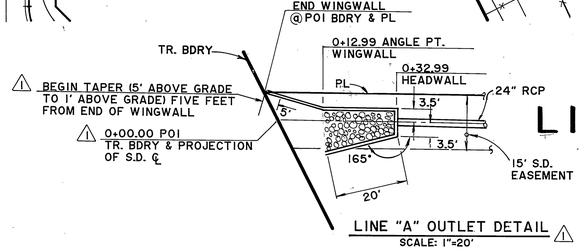

LINE "A" OUTLET DETAIL

SCALE: 1"=20'

LINE "A"

Underground Service Alert — Call: TOLL FREE 1-800 422-4133 — TWO WORKING DAYS BEFORE YOU DIG

PRIVATE ENGINEERING NOTE

CONSTRUCTION CONTRACTOR AGREES THAT IN ACCORDANCE WITH GENERALLY ACCEPTED CONSTRUCTION PRACTICES, CONSTRUCTION CONTRACTOR WILL BE REQUIRED TO ASSUME SOLE AND COMPLETE RESPONSIBILITY FOR JOB SITE CONDITIONS DURING THE COURSE OF CONSTRUCTION OF THE PROJECT, INCLUDING SAFETY OF ALL PERSONS AND PROPERTY; THAT THIS REQUIREMENT SHALL BE MADE TO APPLY CONTINUOUSLY AND NOT BE LIMITED TO NORMAL WORKING HOURS, AND CONSTRUCTION CONTRACTOR FURTHER AGREES TO DEFEND, INDEMNIFY AND HOLD DESIGN PROFESSIONAL HARMLESS FROM ANY AND ALL LIABILITY, REAL OR ALLEGED, IN CONNECTION WITH THE PERFORMANCE OF WORK ON THIS PROJECT, EXCEPTING LIABILITY ARISING FROM THE SOLE NEGLIGENCE OF DESIGN PROFESSIONAL

REGISTERED PROFESSIONAL ENGINEER JOHN W. CANTY No. 17550 for CIVIL STATE OF CALIFORNIA

PREPARED UNDER THE DIRECTION OF: John W. Canty
REGISTERED CIVIL ENGINEER NO. 17550
EXPIRATION DATE 6-30-93 DATE: 7/18/89
APPROVED BY:

J.F. DAVIDSON ASSOCIATES, INC.
CIVIL ENGINEERS • SURVEYORS • PLANNERS
P.O. BOX 493 RIVERSIDE, CA 92502 (714) 686-0844
11200 SO. MT. VERNON AVE. #D COLTON, CA 92324 (714) 825-1082
73-080 EL PASEO, #103 PALM DESERT, CA 92260 (619) 346-5691
JFD ASSOCIATES

SCALE 1" = 40'
DATE APR 1989

BENCH MARK: V.B. 10-64 ELEV. 1700.670 DATE: 1971 BRASS DISK FLUSH & MARKED V.B. 10-64, 0.6 MI. E. ON VAN BUREN BLVD. FROM CL INT. OF VAN BUREN & WOOD RD., 205' N. OF VAN BUREN @ THE N.E. SIDE OF GRANITE BOULDERS, ON TOP OF 3'x15'x18' BOULDER

MARK	REVISIONS	APPR.	DATE
1	SHIFT LINE "A" WESTERLY/MODIFY OUTLET	FDD	5/14/90

DESIGNED BY ASW DRAWN BY DP CHECKED BY ALR

CITY OF RIVERSIDE, CALIFORNIA
DEPARTMENT OF PUBLIC WORKS

	BY	DATE
APPROVED BY		
PRINCIPAL ENGINEER	—	—
PARK DEPARTMENT	—	—
TRAFFIC DIVISION	—	—
CHIEF P.W. ENGR.	MAC	4/5/90
	WJA	5/3/90

APPROVED BY
DIRECTOR OF PUBLIC WORKS
DATE 6/7/90

TRACT 22653

STORM DRAIN
PLAN & PROFILE
LATERAL "C-3"
LINE "B" - LINE "A"

FOR: S.I.C. CORP.

*AS BUILT 8/18/97 RM

PROJECT NO. D-576
SHEET 2 OF 11
FILE NO. 8911168

INDEXED 7-3-90 GH

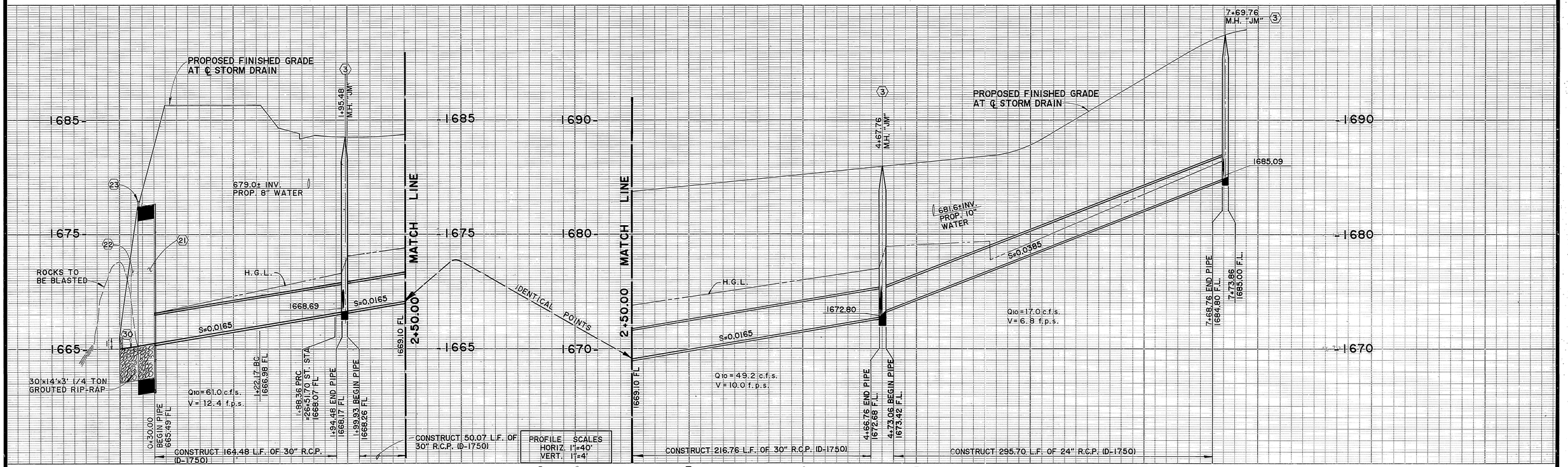

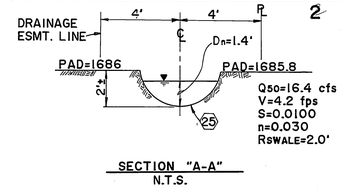

SECTION "A-A"
N.T.S.

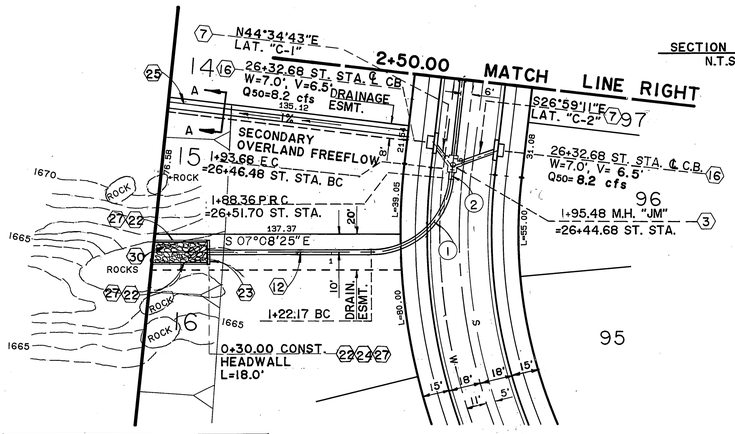

M.H. "JM" I+95.48		
	LAT. "C-1"	LAT. "C-2"
A	45°00'00"	63°26'06"
B	18"	18"
C'	4.60'	3.51'
D1	30"	30"
D2	30"	30"
E'	4.45'	3.15'
L'	5.45'	4.15'

M.H. "JM" 4+67.76	
A	45°00'00"
B	30"
C'	5.30'
D1	24"
D2	30"
E'	5.30'
L'	6.30'

M.H. "JM" 7+69.76	
A	45°00'00"
B	18"
C'	4.15'
D1	-
D2	24"
E'	4.10'
L'	5.10'

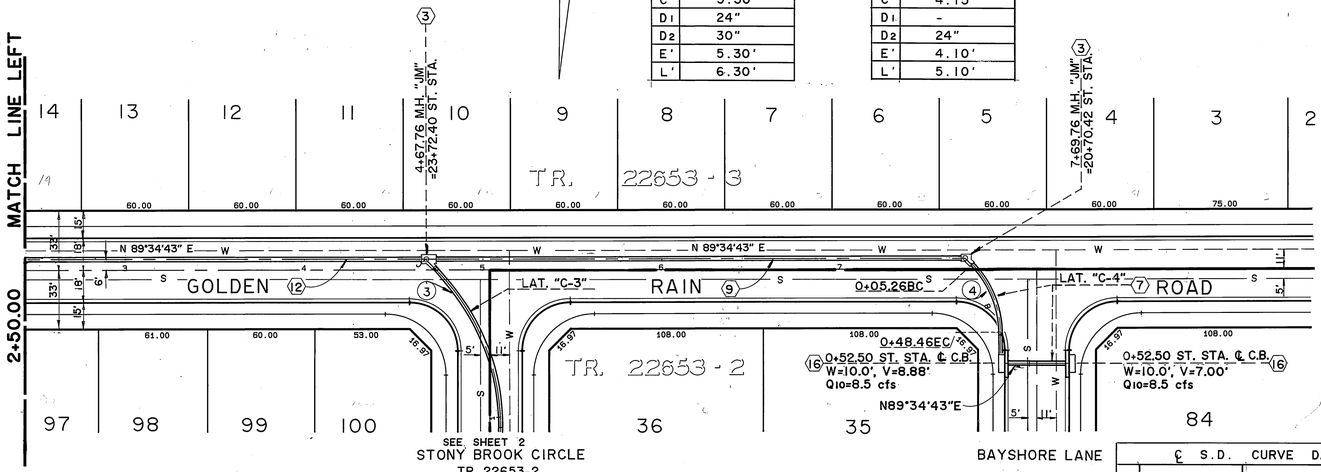

℄ S.D. CURVE DATA				
No.	Δ	R	L	T
1	84°16'38"	45.00'	66.19'	40.72'
2	00°59'46"	306.00'	5.32'	2.66'
3	45°00'00"	125.00'	98.17'	51.78'
4	45°00'00"	55.00'	43.20'	22.78'

LINE "C"

Underground Service Alert
DIG ALERT
Call: TOLL FREE
1-800 422-4133
TWO WORKING DAYS BEFORE YOU DIG

PRIVATE ENGINEERING NOTE

CONSTRUCTION CONTRACTOR AGREES THAT IN ACCORDANCE WITH GENERALLY ACCEPTED CONSTRUCTION PRACTICES, CONSTRUCTION CONTRACTOR WILL BE REQUIRED TO ASSUME SOLE AND COMPLETE RESPONSIBILITY FOR JOB SITE CONDITIONS DURING THE COURSE OF CONSTRUCTION OF THE PROJECT, INCLUDING SAFETY OF ALL PERSONS AND PROPERTY; THAT THIS REQUIREMENT SHALL BE MADE TO APPLY CONTINUOUSLY AND NOT BE LIMITED TO NORMAL WORKING HOURS, AND CONSTRUCTION CONTRACTOR FURTHER AGREES TO DEFEND, INDEMNIFY AND HOLD DESIGN PROFESSIONAL HARMLESS FROM ANY AND ALL LIABILITY, REAL OR ALLEGED, IN CONNECTION WITH THE PERFORMANCE OF WORK ON THIS PROJECT, EXCEPTING LIABILITY ARISING FROM THE SOLE NEGLIGENCE OF DESIGN PROFESSIONAL

REGISTERED PROFESSIONAL ENGINEER JOHN W. CANTY No. 17550 Exp 6/30/93 CIVIL STATE OF CALIFORNIA

PREPARED UNDER THE DIRECTION OF: John W Canty
REGISTERED CIVIL ENGINEER NO. 17550
EXPIRATION DATE 6-30-93 DATE: 7/18/89

APPROVED BY:

J.F. DAVIDSON ASSOCIATES, INC.
CIVIL ENGINEERS • SURVEYORS • PLANNERS
JFD ASSOCIATES
P.O. BOX 493 RIVERSIDE, CA 92502 (714) 686-0844
11200 SO. MT. VERNON AVE. #D COLTON, CA 92324 (714) 825-1082
73-080 EL PASEO, #103 PALM DESERT, CA 92260 (619) 346-5691

SCALE 1" = 40'
DATE APR 1989

BENCH MARK: V.B. 10-64 ELEV. 1700.670 DATE: 1971
BRASS DISK FLUSH & MARKED V.B. 10-64, 0.6 MI. E. ON VAN BUREN BLVD. FROM CL INT. OF VAN BUREN & WOOD RD., 205' N. OF VAN BUREN @ THE N.E. SIDE OF GRANITE BOULDERS, ON TOP OF 3'x15'x18' BOULDER

MARK	REVISIONS	APPR.	DATE

DESIGNED BY ASW DRAWN BY DP CHECKED BY ALR

CITY OF RIVERSIDE, CALIFORNIA
DEPARTMENT OF PUBLIC WORKS

APPROVED BY	BY	DATE
PRINCIPAL ENGINEER	—	—
PARK DEPARTMENT	—	—
TRAFFIC DIVISION	—	—
CHIEF P.W. ENGR.	MHL	6/5/90
	WWW	6/7/90

APPROVED BY: Barry Bal
DIRECTOR OF PUBLIC WORKS
DATE 6/7/90

TRACT 22653
STORM DRAIN
PLAN & PROFILE
LINE "C"

FOR: S.I.C. CORP.

AS BUILT 8/1987 GM

PROJECT NO. D-576
SHEET 3 OF 11
FILE NO. 8911168

FOOD

INDEXED 7-3-90 GH

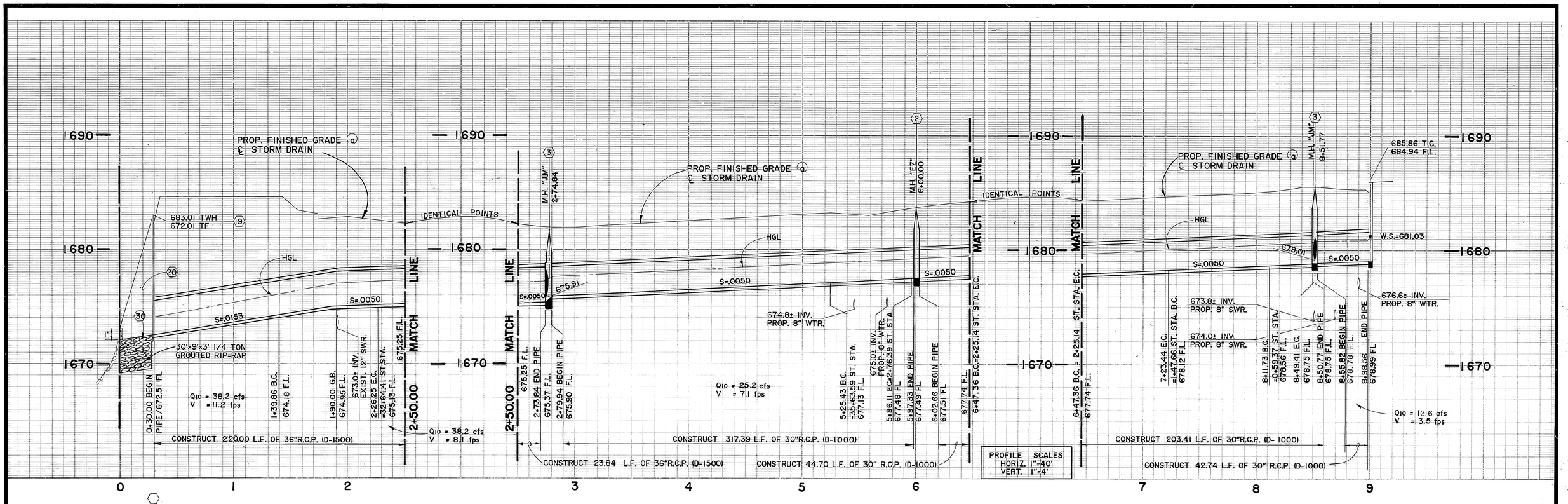

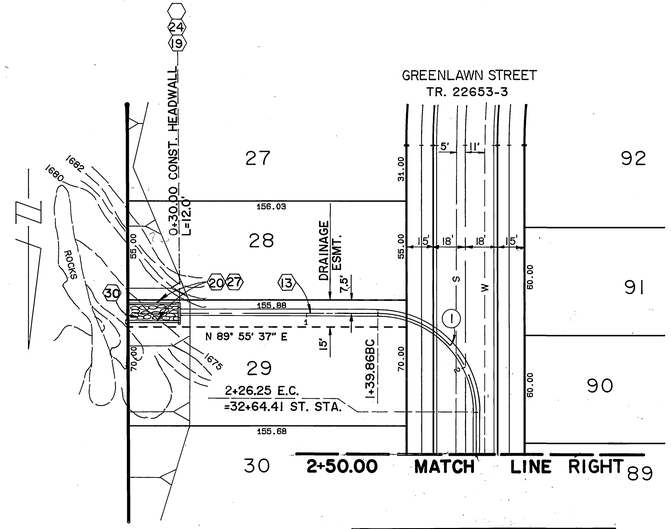

M.H. "JM"	
2+74.84	
	LAT. "D-1"	LAT. "D-2"
A	45° 00' 00"	63° 26' 06"
B	24"	24"
C'	5.40'	4.05'
D_1	30"	30"
D_2	36"	36"
E'	5.10'	3.69'
L'	6.10'	4.69'

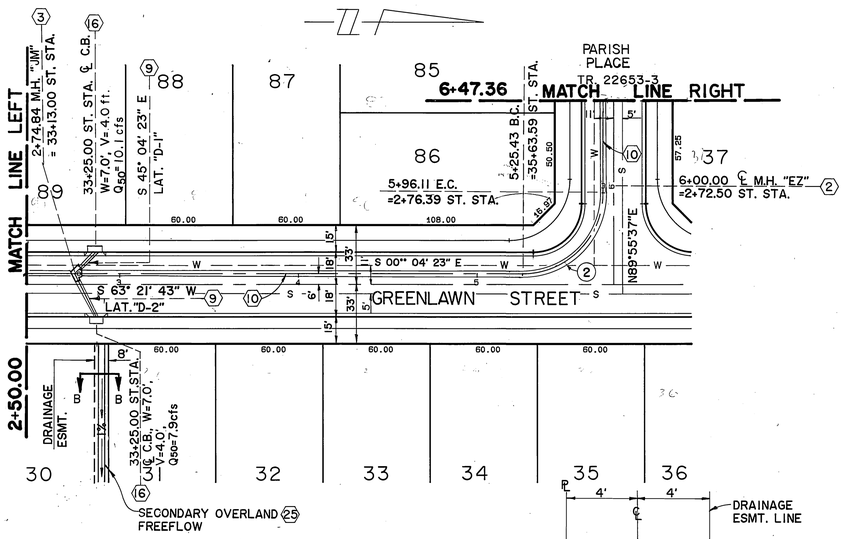

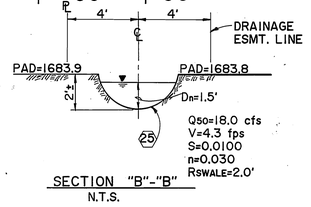

LINE "D"

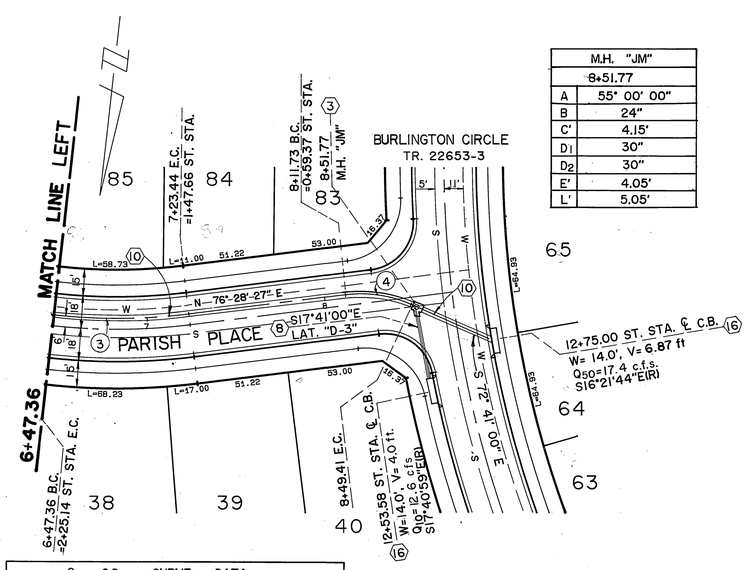

M.H. "JM"
8+51.77
A	55° 00' 00"
B	24"
C'	4.15'
D_1	30"
D_2	30"
E'	4.05'
L'	5.05'

℄ S.D. CURVE DATA				
No.	Δ	R	L	T
①	90° 00' 00"	55'	86.39'	55.00'
②	90° 00' 00"	45'	70.69'	45.00'
③	13° 27' 10"	324'	76.07'	38.21'
④	30° 50' 33"	70'	37.68'	19.31'

Underground Service Alert
Call: TOLL FREE
1-800 422-4133
TWO WORKING DAYS BEFORE YOU DIG

PRIVATE ENGINEERING NOTE

CONSTRUCTION CONTRACTOR AGREES THAT IN ACCORDANCE WITH GENERALLY ACCEPTED CONSTRUCTION PRACTICES, CONSTRUCTION CONTRACTOR WILL BE REQUIRED TO ASSUME SOLE AND COMPLETE RESPONSIBILITY FOR JOB SITE CONDITIONS DURING THE COURSE OF CONSTRUCTION OF THE PROJECT, INCLUDING SAFETY OF ALL PERSONS AND PROPERTY; THAT THIS REQUIREMENT SHALL BE MADE TO APPLY CONTINUOUSLY AND NOT BE LIMITED TO NORMAL WORKING HOURS, AND CONSTRUCTION CONTRACTOR FURTHER AGREES TO DEFEND, INDEMNIFY AND HOLD DESIGN PROFESSIONAL HARMLESS FROM ANY AND ALL LIABILITY, REAL OR ALLEGED, IN CONNECTION WITH THE PERFORMANCE OF WORK ON THIS PROJECT, EXCEPTING LIABILITY ARISING FROM THE SOLE NEGLIGENCE OF DESIGN PROFESSIONAL

REGISTERED PROFESSIONAL ENGINEER JOHN W. CANTY No. 17550 Exp. 6/30/93 CIVIL STATE OF CALIFORNIA

PREPARED UNDER THE DIRECTION OF: John W. Canty
REGISTERED CIVIL ENGINEER NO. 17550
EXPIRATION DATE 6-30-93 DATE: 7/10/89
APPROVED BY:

J.F. DAVIDSON ASSOCIATES, INC.
CIVIL ENGINEERS • SURVEYORS • PLANNERS
P.O. BOX 493, RIVERSIDE, CA 92502 (714) 686-0844
11200 SO. MT. VERNON AVE. #D, COLTON, CA 92324 (714) 825-1082
73-080 EL PASEO, #103, PALM DESERT, CA 92260 (619) 346-5691
JFD ASSOCIATES

SCALE 1" = 40'
DATE APR 1989

BENCH MARK: V.B. 10-64 ELEV. 1700.670 DATE: 1971
BRASS DISK FLUSH & MARKED V.B. 10-64, 0.6 MI. E. ON VAN BUREN BLVD. FROM CL INT. OF VAN BUREN & WOOD RD., 205' N. OF VAN BUREN @ THE N.E. SIDE OF GRANITE BOULDERS, ON TOP OF 3'x15'x16' BOULDER

MARK	REVISIONS	APPR.	DATE

DESIGNED BY ASW DRAWN BY DP CHECKED BY ALR

CITY OF RIVERSIDE, CALIFORNIA
DEPARTMENT OF PUBLIC WORKS

	BY	DATE
APPROVED BY		
PRINCIPAL ENGINEER	---	---
PARK DEPARTMENT	---	---
TRAFFIC DIVISION	---	---
CHIEF P.W. ENGR.	WJL	4/5/90
	WJL	5/30

APPROVED BY
DIRECTOR OF PUBLIC WORKS
DATE 6/7/90

FOR: S.I.C. CORP.

TRACT 22653
STORM DRAIN PLAN & PROFILE
LINE "D"

AS BUILT 8/16/91 RJM

PROJECT NO. D-576
SHEET 4 OF 11
FILE NO. 9911168

INDEXED 7-3-90 GH

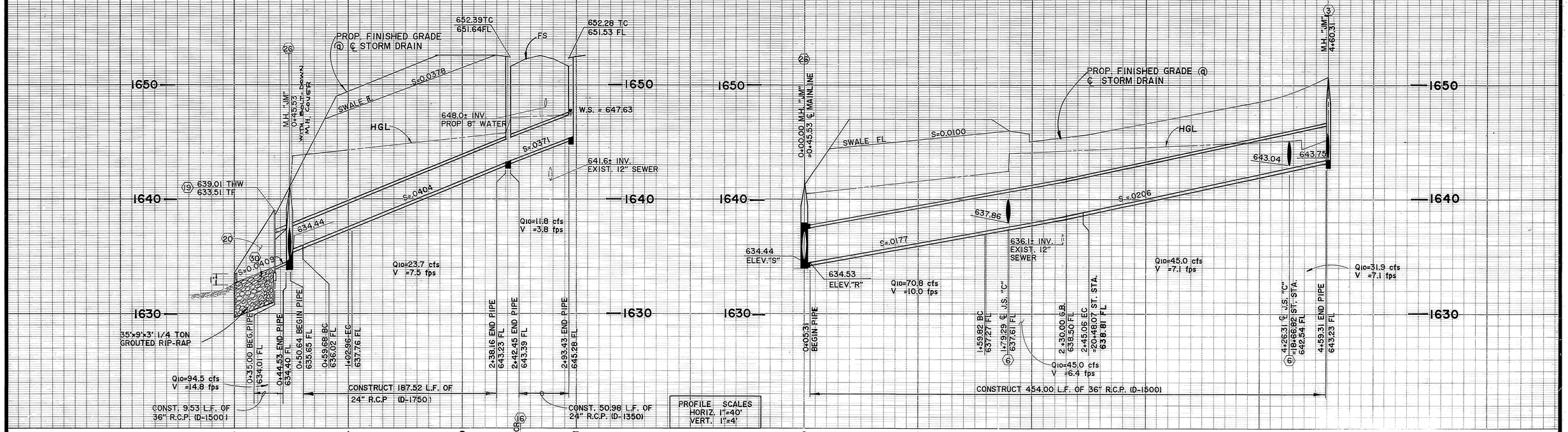

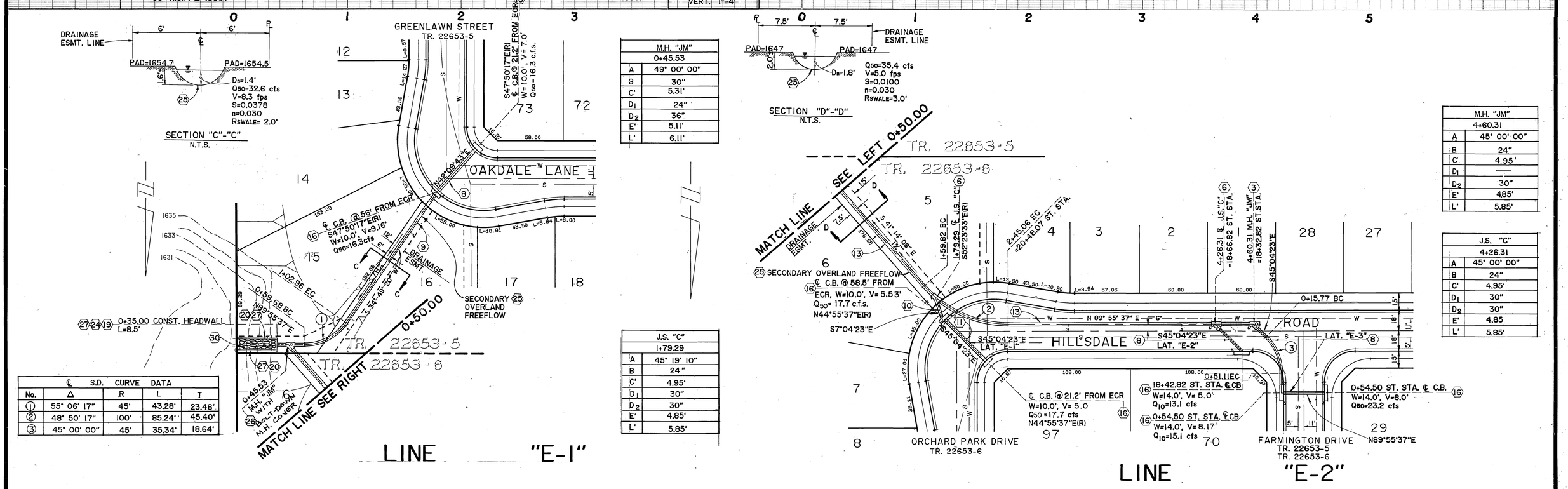

℄	S.D.	CURVE	DATA	
No.	Δ	R	L	T
①	55° 06' 17"	45'	43.28'	23.48'
②	48° 50' 17"	100'	85.24'	45.40'
③	45° 00' 00"	45'	35.34'	18.64'

M.H. "JM"	
	0+45.53
A	49° 00' 00"
B	30"
C'	5.31'
D_1	24"
D_2	36"
E'	5.11'
L'	6.11'

J.S. "C"	
	1+79.29
A	45° 19' 10"
B	24"
C'	4.95'
D_1	30"
D_2	30"
E'	4.85'
L'	5.85'

M.H. "JM"	
	4+60.31
A	45° 00' 00"
B	24"
C'	4.95'
D_1	—
D_2	30"
E'	4.85'
L'	5.85'

J.S. "C"	
	4+26.31
A	45° 00' 00"
B	24"
C'	4.95'
D_1	30"
D_2	30"
E'	4.85
L'	5.85'

Underground Service Alert
CALL BEFORE YOU DIG
Call: TOLL FREE
1-800
422-4133
TWO WORKING DAYS BEFORE YOU DIG

PRIVATE ENGINEERING NOTE

CONSTRUCTION CONTRACTOR AGREES THAT IN ACCORDANCE WITH GENERALLY ACCEPTED CONSTRUCTION PRACTICES, CONSTRUCTION CONTRACTOR WILL BE REQUIRED TO ASSUME SOLE AND COMPLETE RESPONSIBILITY FOR JOB SITE CONDITIONS DURING THE COURSE OF CONSTRUCTION OF THE PROJECT, INCLUDING SAFETY OF ALL PERSONS AND PROPERTY; THAT THIS REQUIREMENT SHALL BE MADE TO APPLY CONTINUOUSLY AND NOT BE LIMITED TO NORMAL WORKING HOURS, AND CONSTRUCTION CONTRACTOR FURTHER AGREES TO DEFEND, INDEMNIFY AND HOLD DESIGN PROFESSIONAL HARMLESS FROM ANY AND ALL LIABILITY, REAL OR ALLEGED, IN CONNECTION WITH THE PERFORMANCE OF WORK ON THIS PROJECT, EXCEPTING LIABILITY ARISING FROM THE SOLE NEGLIGENCE OF DESIGN PROFESSIONAL

REGISTERED PROFESSIONAL ENGINEER — DEREK W. CANTY — No. 17550 — Exp. 6/30/93 — CIVIL — STATE OF CALIFORNIA

PREPARED UNDER THE DIRECTION OF: John W Canty
REGISTERED CIVIL ENGINEER NO. 17550
EXPIRATION DATE 6-30-93 DATE: 7/18/89
APPROVED BY:

J.F. DAVIDSON ASSOCIATES, INC.
CIVIL ENGINEERS • SURVEYORS • PLANNERS
JFD ASSOCIATES
P.O. BOX 493, RIVERSIDE, CA 92502 (714) 686-0844
11200 SO. MT. VERNON AVE. #D, COLTON, CA 92324 (714) 825-1082
73-080 EL PASEO, #103, PALM DESERT, CA 92260 (619) 346-5691

SCALE 1" = 40'
DATE APR 1989

BENCH MARK: V.B. 10-64 ELEV. 1700.670 DATE: 1971
BRASS DISK FLUSH & MARKED V.B. 10-64, 0.6 MI. E. ON VAN BUREN BLVD. FROM CL INT. OF VAN BUREN & WOOD RD., 205' N. OF VAN BUREN @ THE N.E. SIDE OF GRANITE BOULDERS. ON TOP OF 3'x15'x18' BOULDER

MARK	REVISIONS	APPR.	DATE

DESIGNED BY ASW DRAWN BY DP CHECKED BY ALR

CITY OF RIVERSIDE, CALIFORNIA
DEPARTMENT OF PUBLIC WORKS

	APPROVED BY	DATE
PRINCIPAL ENGINEER		
PARK DEPARTMENT		
TRAFFIC DIVISION		
CHIEF P.W. ENGR.	MAL	6/5/90
	MLR	6/7/90

APPROVED BY: Barry Bard
DIRECTOR OF PUBLIC WORKS
DATE 6/7/90

TRACT 22653
STORM DRAIN
PLAN & PROFILE
LINE "E-1"
LINE "E-2"

FOR: S.I.C. CORP.

AS BUILT 8/18/97 RJM

PROJECT NO. D-576
SHEET 5 OF 11
FILE NO. 89II168

2653P6-1002

INDEXED 7-3-90 GH

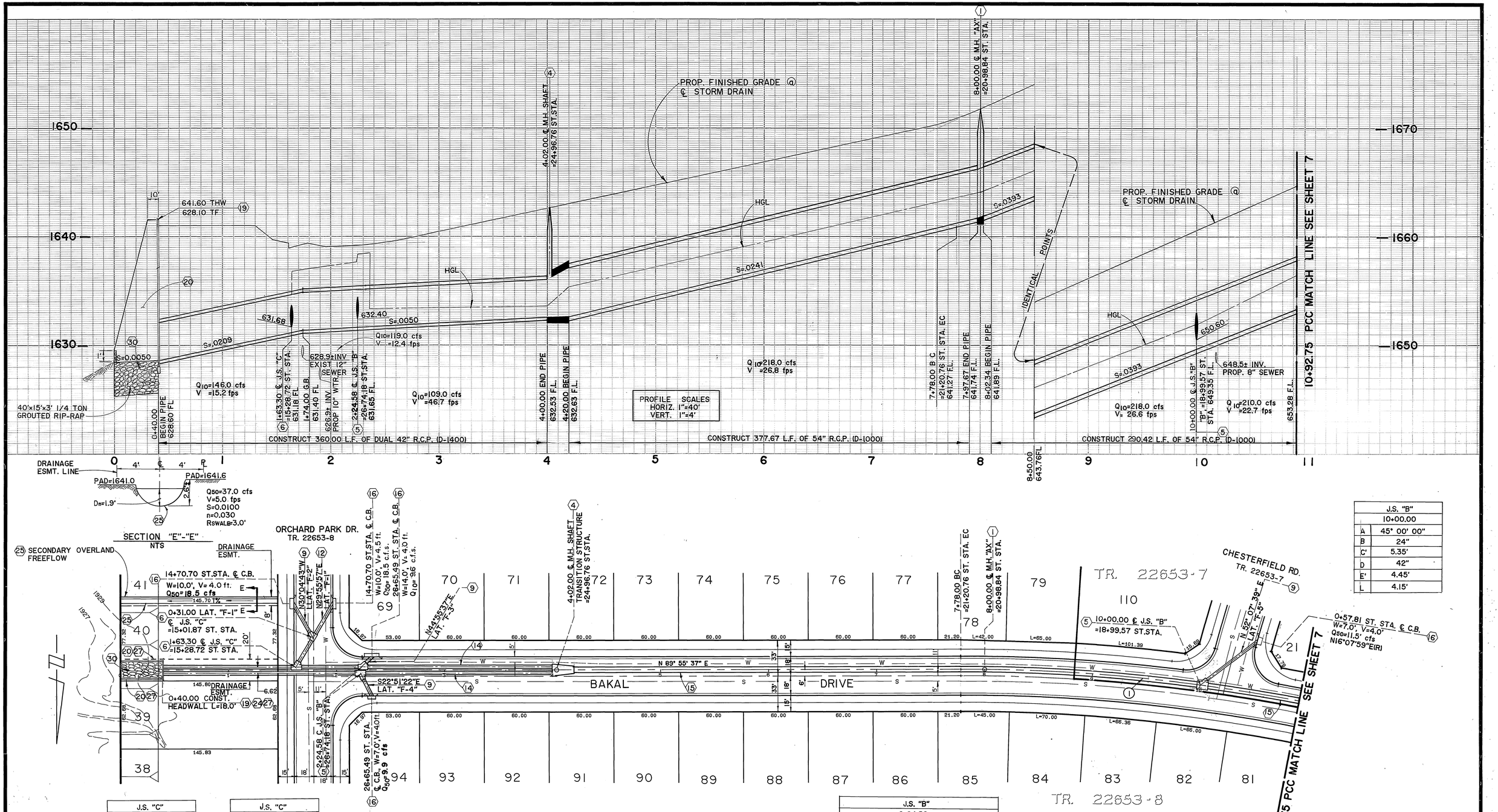

J.S. "C"	
1+63.30	
A	60° 00' 00"
B	30"
C'	4.70'
D_1	42"
D_2	42"
E'	4.40'
L'	5.40'

J.S. "C"	
0+31.00 LAT. "F-1"	
A	60° 00 ' 00"
B	24"
C'	3.80'
D_1	30"
D_2	30"
E	3.70'
L	4.70'

J.S. "B"		
2+24.58		
	LAT. "F-3"	LAT. "F-4"
A	45° 00' 00"	67°13' 02"
B	24"	24"
C'	5.35'	3.65'
D	42"	42"
E'	4.45'	2.61'
L	4.15'	3.16'

J.S. "B"	
10+00.00	
A	45° 00' 00"
B	24"
C'	5.35'
D	42"
E'	4.45'
L	4.15'

℄ S.D. CURVE DATA				
No.	△	R	L	T
①	10° 57' 22"	1646'	314.75'	157.86'

LINE "F"

AS BUILT 8/6/97 RJM

Underground Service Alert
DIAL BEFORE YOU DIG
Call: TOLL FREE
1-800 422-4133
TWO WORKING DAYS BEFORE YOU DIG

PRIVATE ENGINEERING NOTE

CONSTRUCTION CONTRACTOR AGREES THAT IN ACCORDANCE WITH GENERALLY ACCEPTED CONSTRUCTION PRACTICES, CONSTRUCTION CONTRACTOR WILL BE REQUIRED TO ASSUME SOLE AND COMPLETE RESPONSIBILITY FOR JOB SITE CONDITIONS DURING THE COURSE OF CONSTRUCTION OF THE PROJECT, INCLUDING SAFETY OF ALL PERSONS AND PROPERTY; THAT THIS REQUIREMENT SHALL BE MADE TO APPLY CONTINUOUSLY AND NOT BE LIMITED TO NORMAL WORKING HOURS, AND CONSTRUCTION CONTRACTOR FURTHER AGREES TO DEFEND, INDEMNIFY AND HOLD DESIGN PROFESSIONAL HARMLESS FROM ANY AND ALL LIABILITY, REAL OR ALLEGED, IN CONNECTION WITH THE PERFORMANCE OF WORK ON THIS PROJECT, EXCEPTING LIABILITY ARISING FROM THE SOLE NEGLIGENCE OF DESIGN PROFESSIONAL.

REGISTERED PROFESSIONAL ENGINEER JOHN W. CANTY No. 17550 Exp. 6/30/93 CIVIL STATE OF CALIFORNIA

PREPARED UNDER THE DIRECTION OF: John W Canty
REGISTERED CIVIL ENGINEER NO. 17550
EXPIRATION DATE 6-30-93 DATE: 7/18/89
APPROVED BY:

J.F. DAVIDSON ASSOCIATES, INC.
CIVIL ENGINEERS • SURVEYORS • PLANNERS
P.O. BOX 493, RIVERSIDE, CA 92502 (714) 686-0844
11200 SO. MT. VERNON AVE. #D, COLTON, CA 92324 (714) 825-1082
73-080 EL PASEO, #103, PALM DESERT, CA 92260 (619) 346-6691
JFD ASSOCIATES

SCALE 1" = 40'
DATE APR 1989

BENCH MARK: V.B. 10-64 ELEV. 1700.670 DATE: 1971
BRASS DISK FLUSH & MARKED V.B. 10-64, 0.6 MT. E. ON VAN BUREN BLVD. FROM CL INT. OF VAN BUREN & WOOD RD., 205' N. OF VAN BUREN @ THE N.E. SIDE OF GRANITE BOULDERS, ON TOP OF 3'x15'x18' BOULDER

MARK	REVISIONS	APPR.	DATE

DESIGNED BY ASW DRAWN BY DP CHECKED BY ALR

FRED

CITY OF RIVERSIDE, CALIFORNIA
DEPARTMENT OF PUBLIC WORKS

	BY	DATE
APPROVED BY		
PRINCIPAL ENGINEER	—	—
PARK DEPARTMENT	—	—
TRAFFIC DIVISION	—	—
CHIEF P.W. ENGR.	RHG	4/5/90
	WJE	7/9/90

APPROVED BY: Barry Beck
DIRECTOR OF PUBLIC WORKS
DATE 6/7/90

TRACT 22653
STORM DRAIN
PLAN & PROFILE
LINE "F"

FOR: S.I.C. CORP.

PROJECT NO. D-576
SHEET 6 OF 11
FILE NO. 8911168

2623P8 - 1003

INDEXED 7-3-90 GH

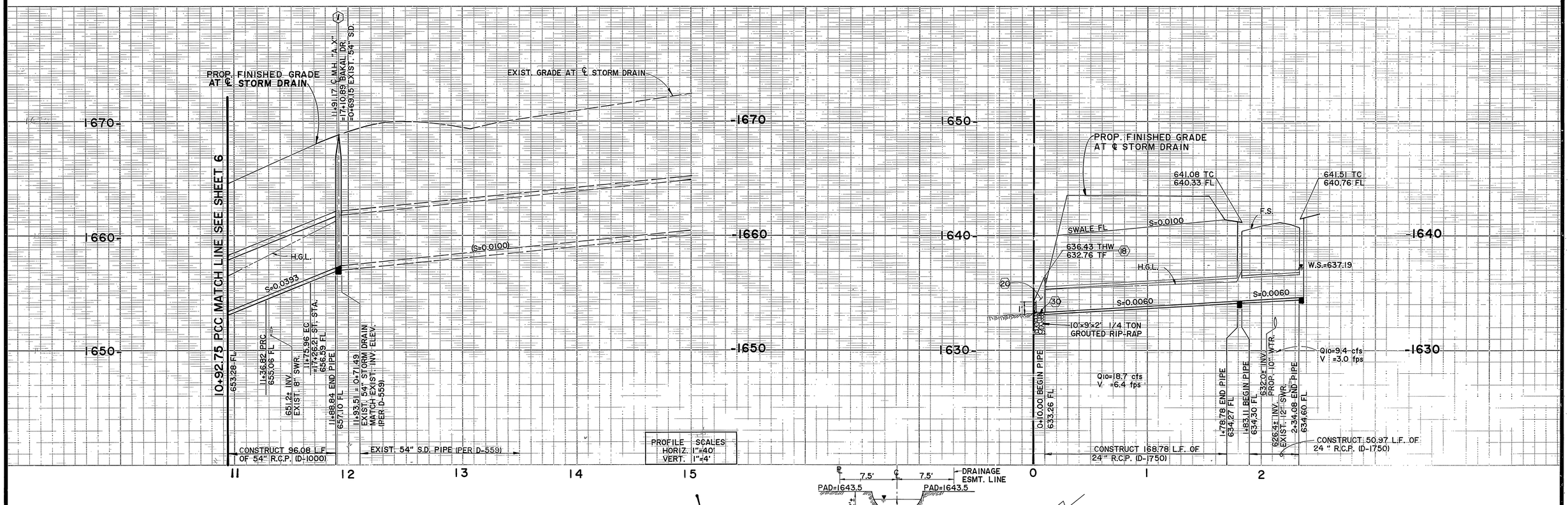

℄ S.D. CURVE DATA				
No.	Δ	R	L	T
①	25°14'52"	100.00'	44.07'	22.40'
②	22°25'11"	100.00'	39.13'	19.82'

Underground Service Alert
CALL BEFORE YOU DIG
Call: TOLL FREE
1-800
422-4133
TWO WORKING DAYS BEFORE YOU DIG

PRIVATE ENGINEERING NOTE

CONSTRUCTION CONTRACTOR AGREES THAT IN ACCORDANCE WITH GENERALLY ACCEPTED CONSTRUCTION PRACTICES, CONSTRUCTION CONTRACTOR WILL BE REQUIRED TO ASSUME SOLE AND COMPLETE RESPONSIBILITY FOR JOB SITE CONDITIONS DURING THE COURSE OF CONSTRUCTION OF THE PROJECT, INCLUDING SAFETY OF ALL PERSONS AND PROPERTY; THAT THIS REQUIREMENT SHALL BE MADE TO APPLY CONTINUOUSLY AND NOT BE LIMITED TO NORMAL WORKING HOURS, AND CONSTRUCTION CONTRACTOR FURTHER AGREES TO DEFEND, INDEMNIFY AND HOLD DESIGN PROFESSIONAL HARMLESS FROM ANY AND ALL LIABILITY, REAL OR ALLEGED, IN CONNECTION WITH THE PERFORMANCE OF WORK ON THIS PROJECT, EXCEPTING LIABILITY ARISING FROM THE SOLE NEGLIGENCE OF DESIGN PROFESSIONAL

REGISTERED PROFESSIONAL ENGINEER JOHN W. CANTY No. 17550 Exp 6/30/93 CIVIL STATE OF CALIFORNIA

PREPARED UNDER THE DIRECTION OF: John W. Canty
REGISTERED CIVIL ENGINEER NO. 17550
EXPIRATION DATE 6-30-93 DATE: 7/18/89
APPROVED BY:

J.F. DAVIDSON ASSOCIATES, INC.
CIVIL ENGINEERS • SURVEYORS • PLANNERS
JFD ASSOCIATES
P.O. BOX 493 RIVERSIDE, CA 92502 (714) 686-0844
11200 SO. MT. VERNON AVE. #D COLTON, CA 92324 (714) 825-1082
73-080 EL PASEO, #103 PALM DESERT, CA 92260 (619) 346-5691

SCALE 1" = 40'
DATE APR 1989

BENCH MARK: V.B. 10-64 ELEV. 1700.670 DATE: 1971
BRASS DISK FLUSH & MARKED V.B. 10-64, 0.6 MI. E. ON VAN BUREN BLVD. FROM CL INT. OF VAN BUREN & WOOD RD., 205' N. OF VAN BUREN @ THE N.E. SIDE OF GRANITE BOULDERS, ON TOP OF 3'x15'x18' BOULDER

MARK	REVISIONS	APPR.	DATE

DESIGNED BY ASW DRAWN BY DP CHECKED BY ALR

CITY OF RIVERSIDE, CALIFORNIA
DEPARTMENT OF PUBLIC WORKS

	BY	DATE
APPROVED BY		
PRINCIPAL ENGINEER	—	—
PARK DEPARTMENT	—	—
TRAFFIC DIVISION	—	—
CHIEF P.W. ENGR.	RMC	4/5/90
	[illegible]	4/9/90

APPROVED BY
DIRECTOR OF PUBLIC WORKS
DATE 6/7/90

AS BUILT 6/18/97 RM

TRACT 22653
STORM DRAIN
PLAN & PROFILE
LINE "F"
LINE "G"
FOR: S.I.C. CORP.

PROJECT NO. D-576
SHEET 7 OF 11
FILE NO. 8911168

INDEXED 7-3-90 GH

263188-1002

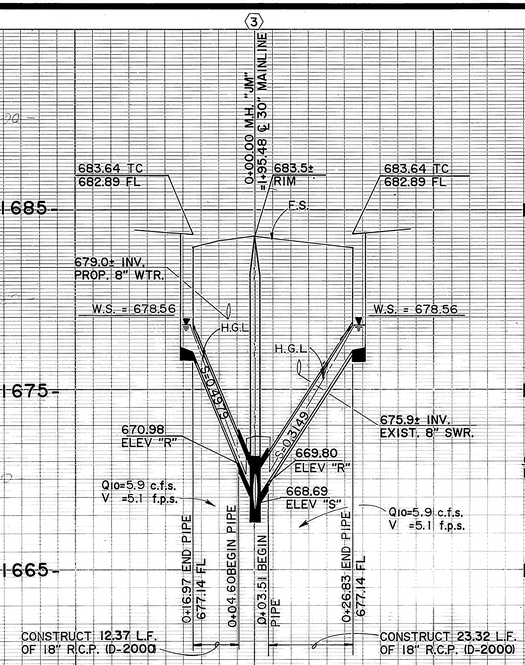

LAT. "C-1" & "C-2"

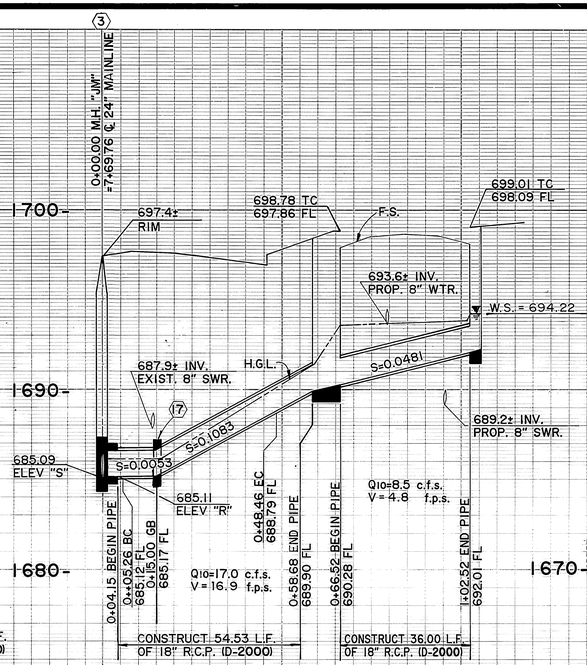

LATERAL "C-4"

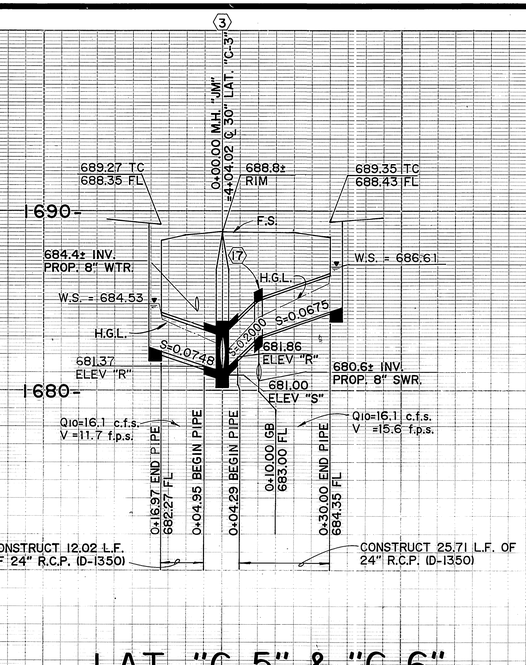

LAT. "C-5" & "C-6"

PROFILE	SCALES
HORIZ.	1"=20'
VERT.	1"=4'

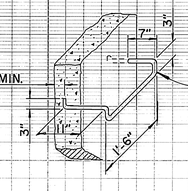

STEP DETAIL

NOTE: STEPS-NONE REQUIRED WHERE "H" IS LESS THAN 30". WHERE "H" IS 30" OR MORE, INSTALL STEPS WITH LOWEST RUNG 12" ABOVE THE FLOOR, AND HIGHEST RUNG NOT MORE THAN 6" BELOW TOP OF INLET. THE DISTANCE BETWEEN STEPS SHALL NOT EXCEED 12" AND SHALL BE UNIFORM THROUGHOUT THE LENGTH OF THE WALL. PLACE STEPS IN THE WALL WITHOUT AN OPENING.

GALVANIZING-SEE STANDARD SPECIFICATION OR SPECIAL PROVISIONS.

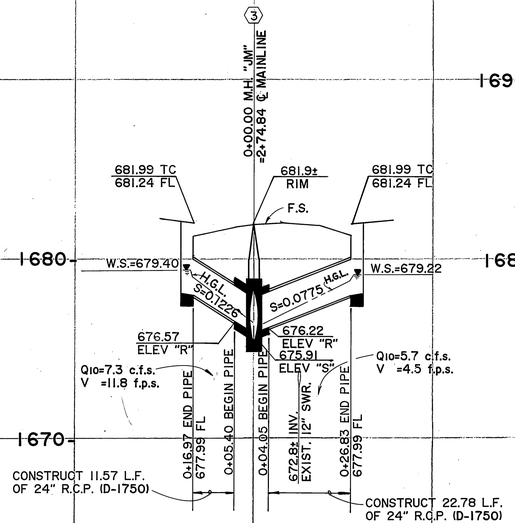

LAT. "D-1" & "D-2"

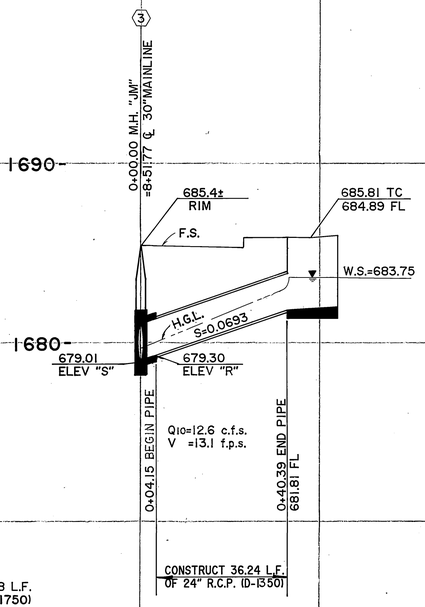

LAT. "D-3"

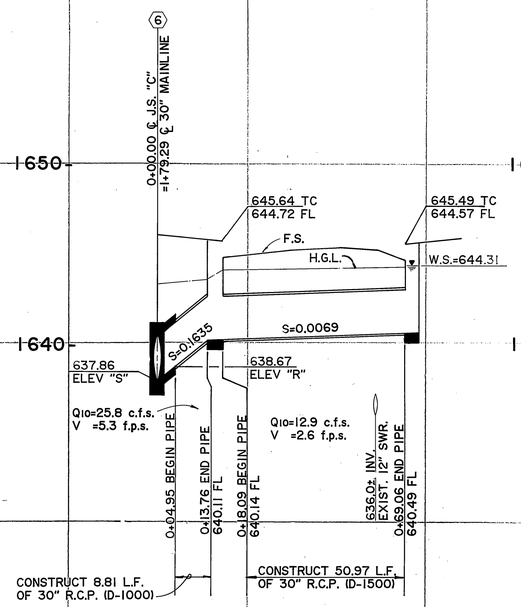

LATERAL "E-1"

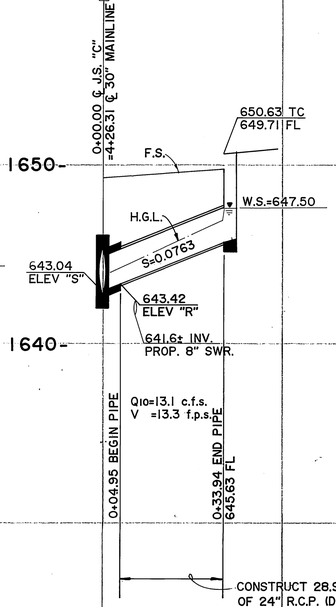

LAT. "E-2"

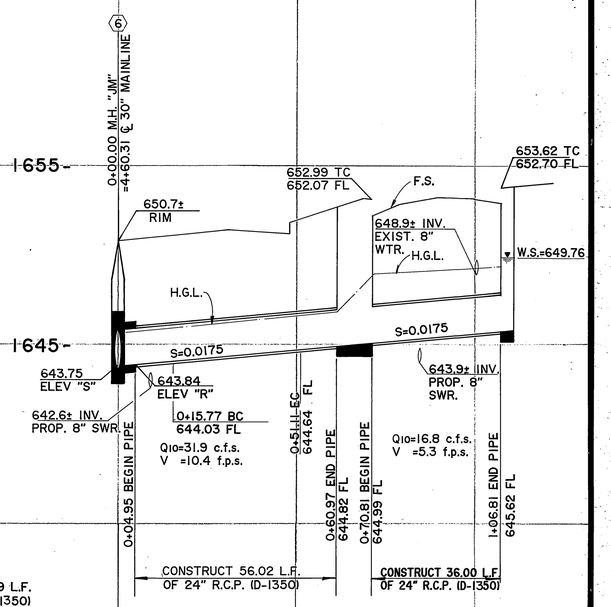

LATERAL "E-3"

Underground Service Alert
CALL BEFORE YOU DIG
Call: TOLL FREE
1-800
422-4133
TWO WORKING DAYS BEFORE YOU DIG

PRIVATE ENGINEERING NOTE

CONSTRUCTION CONTRACTOR AGREES THAT IN ACCORDANCE WITH GENERALLY ACCEPTED CONSTRUCTION PRACTICES, CONSTRUCTION CONTRACTOR WILL BE REQUIRED TO ASSUME SOLE AND COMPLETE RESPONSIBILITY FOR JOB SITE CONDITIONS DURING THE COURSE OF CONSTRUCTION OF THE PROJECT, INCLUDING SAFETY OF ALL PERSONS AND PROPERTY; THAT THIS REQUIREMENT SHALL BE MADE TO APPLY CONTINUOUSLY AND NOT BE LIMITED TO NORMAL WORKING HOURS, AND CONSTRUCTION CONTRACTOR FURTHER AGREES TO DEFEND, INDEMNIFY AND HOLD DESIGN PROFESSIONAL HARMLESS FROM ANY AND ALL LIABILITY, REAL OR ALLEGED, IN CONNECTION WITH THE PERFORMANCE OF WORK ON THIS PROJECT, EXCEPTING LIABILITY ARISING FROM THE SOLE NEGLIGENCE OF DESIGN PROFESSIONAL

REGISTERED PROFESSIONAL ENGINEER JOHN W. CANTY No. 17550 Exp. 6/30/93 CIVIL STATE OF CALIFORNIA

PREPARED UNDER THE DIRECTION OF: John W Canty
REGISTERED CIVIL ENGINEER NO. 17550
EXPIRATION DATE 6-30-93 DATE 7/18/89
APPROVED BY:

SCALE AS SHOWN
DATE APR. 1989

J.F. DAVIDSON ASSOCIATES, INC.
CIVIL ENGINEERS • SURVEYORS • PLANNERS
P.O. BOX 493 RIVERSIDE, CA 92502 (714) 686-0844
11200 SO. MT. VERNON AVE. #D COLTON, CA 92324 (714) 825-1082
73-080 EL PASEO, #103 PALM DESERT, CA 92260 (619) 346-5691
JFD ASSOCIATES

BENCH MARK: V.B. 10-64 ELEV. 1700.670 DATE: 1971
BRASS DISK FLUSH & MARKED V.B. 10-64, 0.6 MI. E ON VAN BUREN BLVD. FROM CL INT. OF VAN BUREN & WOOD RD., 205' N. OF VAN BUREN @ THE N.E. SIDE OF GRANITE BOULDERS, ON TOP OF 3'x15'x18' BOULDER.

MARK	REVISIONS	APPR.	DATE

DESIGNED BY ASW DRAWN BY DP CHECKED BY ALR

CITY OF RIVERSIDE, CALIFORNIA
DEPARTMENT OF PUBLIC WORKS

	BY	DATE
APPROVED BY		
PRINCIPAL ENGINEER	—	—
PARK DEPARTMENT	—	—
TRAFFIC DIVISION	—	—
CHIEF P.W. ENGR.	RWL	4/5/90
	WLA	7/3/90

APPROVED BY: Barry Earl
DIRECTOR OF PUBLIC WORKS
DATE 6/7/90

AS BUILT 8/10/97 RJM

TRACT 22653
STORM DRAIN
LATERALS
AND STEP DETAIL

FOR: S.I.C. CORP.

PROJECT NO. D-576
SHEET 8 OF 11
FILE NO. 891168

INDEXED 7-3-90 GH

PROFILE SCALES
HORIZ. 1"=20'
VERT. 1"=4'

TRANSITION DETAIL

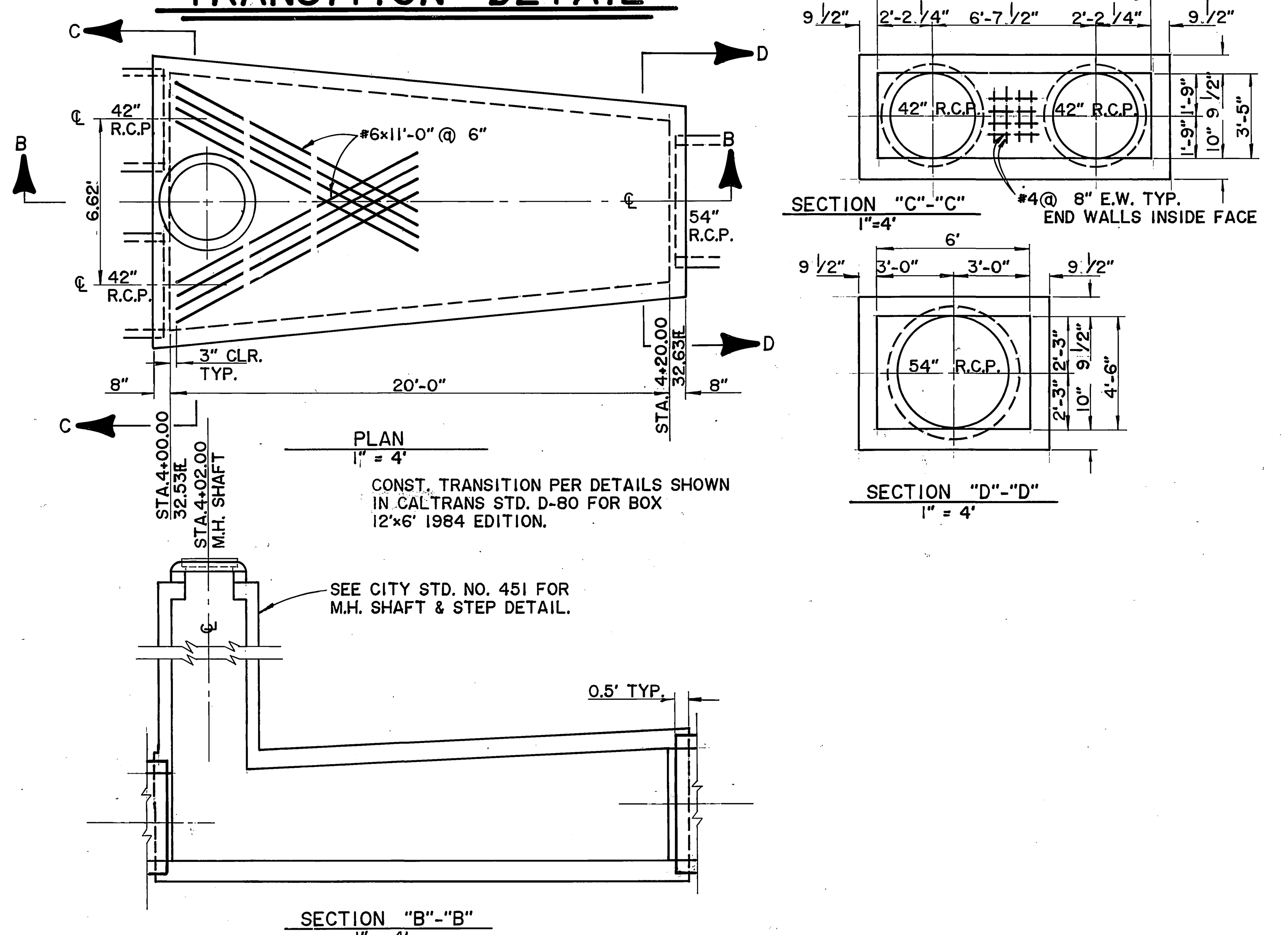

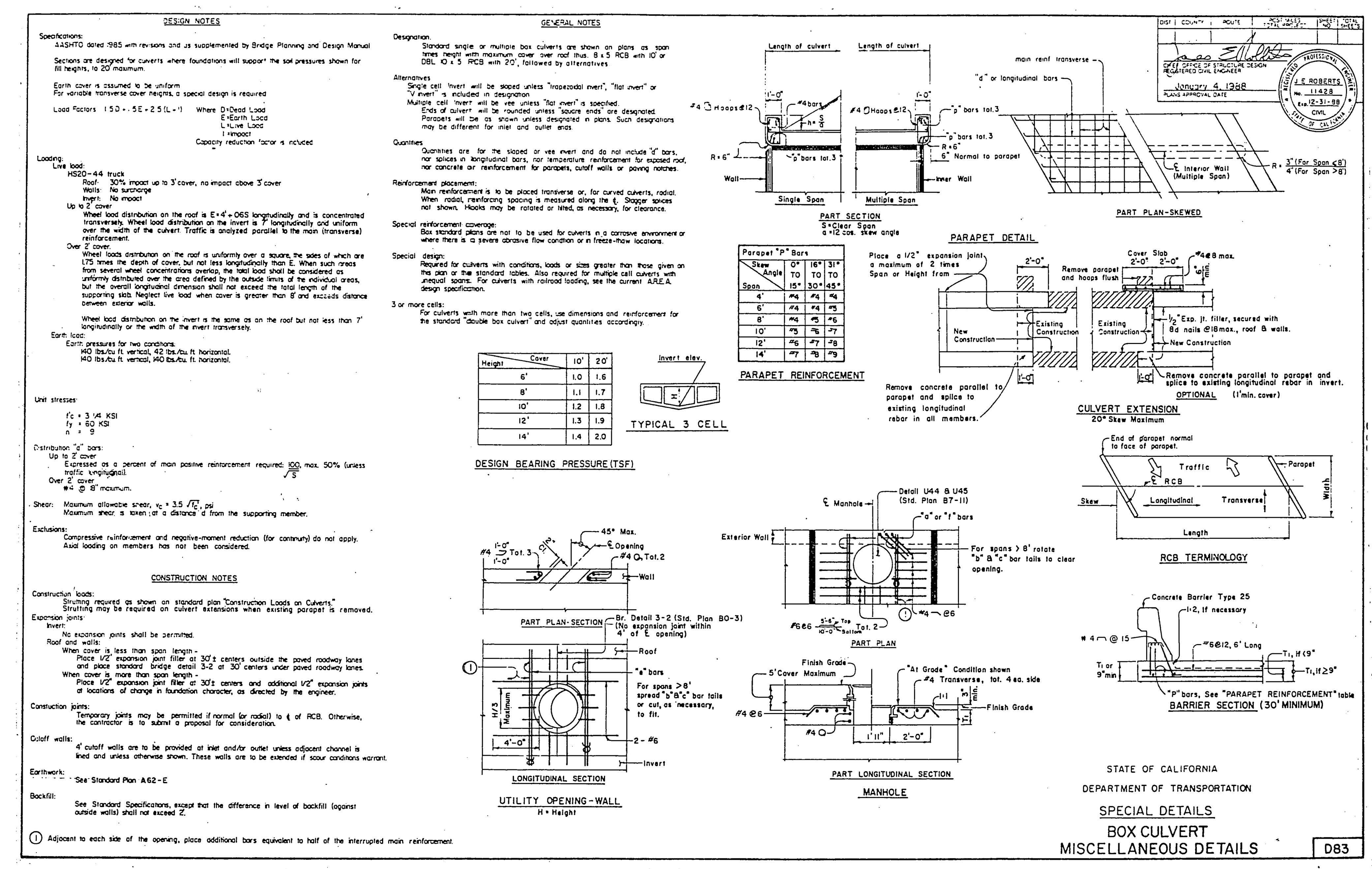

PARAPET DETAIL

Underground Service Alert
Call: TOLL FREE
1-800
422-4133
TWO WORKING DAYS BEFORE YOU DIG

PRIVATE ENGINEERING NOTE

CONSTRUCTION CONTRACTOR AGREES THAT IN ACCORDANCE WITH GENERALLY ACCEPTED CONSTRUCTION PRACTICES, CONSTRUCTION CONTRACTOR WILL BE REQUIRED TO ASSUME SOLE AND COMPLETE RESPONSIBILITY FOR JOB SITE CONDITIONS DURING THE COURSE OF CONSTRUCTION OF THE PROJECT, INCLUDING SAFETY OF ALL PERSONS AND PROPERTY; THAT THIS REQUIREMENT SHALL BE MADE TO APPLY CONTINUOUSLY AND NOT BE LIMITED TO NORMAL WORKING HOURS, AND CONSTRUCTION CONTRACTOR FURTHER AGREES TO DEFEND, INDEMNIFY AND HOLD DESIGN PROFESSIONAL HARMLESS FROM ANY AND ALL LIABILITY, REAL OR ALLEGED, IN CONNECTION WITH THE PERFORMANCE OF WORK ON THIS PROJECT, EXCEPTING LIABILITY ARISING FROM THE SOLE NEGLIGENCE OF DESIGN PROFESSIONAL

REGISTERED PROFESSIONAL ENGINEER JOHN W. CANTY No. 17550 Exp. 6/30/93 CIVIL STATE OF CALIFORNIA

PREPARED UNDER THE DIRECTION OF: John W. Canty
REGISTERED CIVIL ENGINEER NO. 17550
EXPIRATION DATE 6-30-93 DATE: 7/18/89
APPROVED BY:

J.F. DAVIDSON ASSOCIATES, INC.
CIVIL ENGINEERS • SURVEYORS • PLANNERS
P.O. BOX 493, RIVERSIDE, CA 92502, (714) 686-0844
11200 SO. MT. VERNON AVE. #D, COLTON, CA 92324, (714) 825-1082
73-080 EL PASEO, #103, PALM DESERT, CA 92260, (619) 346-5691
JFD ASSOCIATES

SCALE: AS SHOWN
DATE: APR. 1989

BENCH MARK: V.B. 10-64 ELEV. 1700.670 DATE: 1971 BRASS DISK FLUSH & MARKED V.B. 10-64, 0.6 MI. E ON VAN BUREN BLVD. FROM CL INT. OF VAN BUREN & WOOD RD., 205' N. OF VAN BUREN a THE N.E. SIDE OF GRANITE BOULDERS, ON TOP OF 3'x15'x18' BOULDER.

MARK	REVISIONS	APPR.	DATE

DESIGNED BY ASW DRAWN BY CRG CHECKED BY ALR

FRED

CITY OF RIVERSIDE, CALIFORNIA
DEPARTMENT OF PUBLIC WORKS

APPROVED BY	BY	DATE
PRINCIPAL ENGINEER	—	—
PARK DEPARTMENT	—	—
TRAFFIC DIVISION	—	—
CHIEF P. W. ENGR.	RMcG	6-6-90
	KKK	1/3/90

APPROVED BY [signature]
DIRECTOR OF PUBLIC WORKS
DATE 6/7/90

TRACT 22653
STORM DRAIN LATERALS, PARAPET DETAIL AND TRANSITION STRUCTURE DETAIL
FOR: S.I.C. CORP.

AS BUILT 8/18/97 RJM
PROJECT NO. D-576
SHEET 9 OF 11
FILE NO. 8911168

INDEXED 7-3-90 FH

SINGLE BOX CULVERT

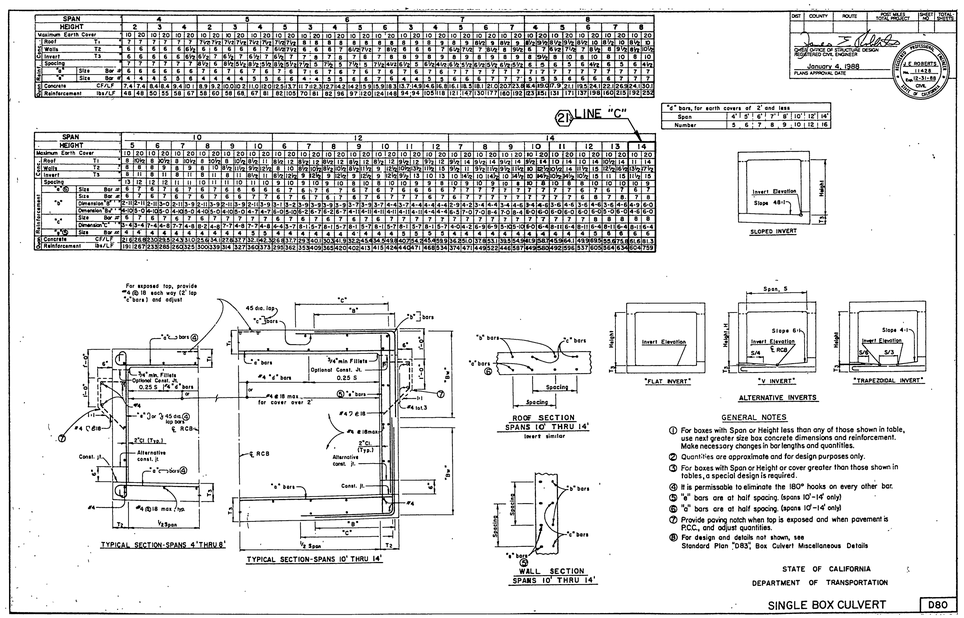

GENERAL NOTES

1. For boxes with Span or Height less than any of those shown in table, use next greater size box concrete dimensions and reinforcement. Make necessary changes in bar lengths and quantities.
2. Quantities are approximate and for design purposes only.
3. For boxes with Span or Height or cover greater than those shown in tables, a special design is required.
4. It is permissable to eliminate the 180° hooks on every other bar.
5. "e" bars are at half spacing. (spans 10'-14' only)
6. "a" bars are at half spacing. (spans 10'-14' only)
7. Provide paving notch when top is exposed and when pavement is PCC, and adjust quantities.
8. For design and details not shown, see Standard Plan "D83", Box Culvert Miscellaneous Details

STATE OF CALIFORNIA
DEPARTMENT OF TRANSPORTATION

SINGLE BOX CULVERT

D80

PIPE HEADWALLS AND STRUT DETAILS

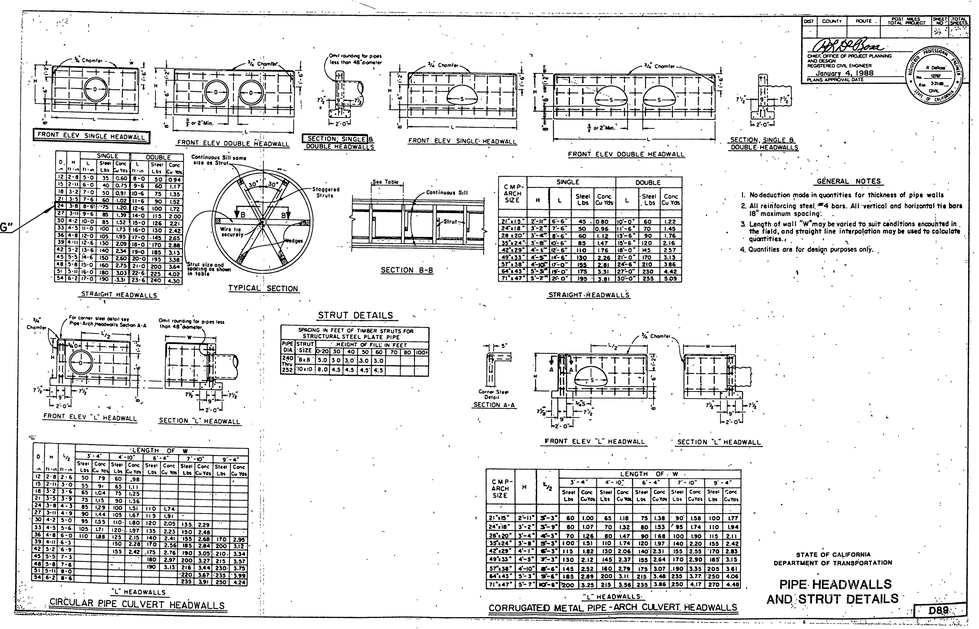

GENERAL NOTES

1. No deduction made in quantities for thickness of pipe walls
2. All reinforcing steel "#4 bars. All vertical and horizontal tie bars 18" maximum spacing.
3. Length of wall "W" may be varied to suit conditions encountered in the field, and straight line interpolation may be used to calculate quantities.
4. Quantities are for design purposes only.

STATE OF CALIFORNIA
DEPARTMENT OF TRANSPORTATION

PIPE HEADWALLS AND STRUT DETAILS

D89

BOX CULVERT WINGWALLS

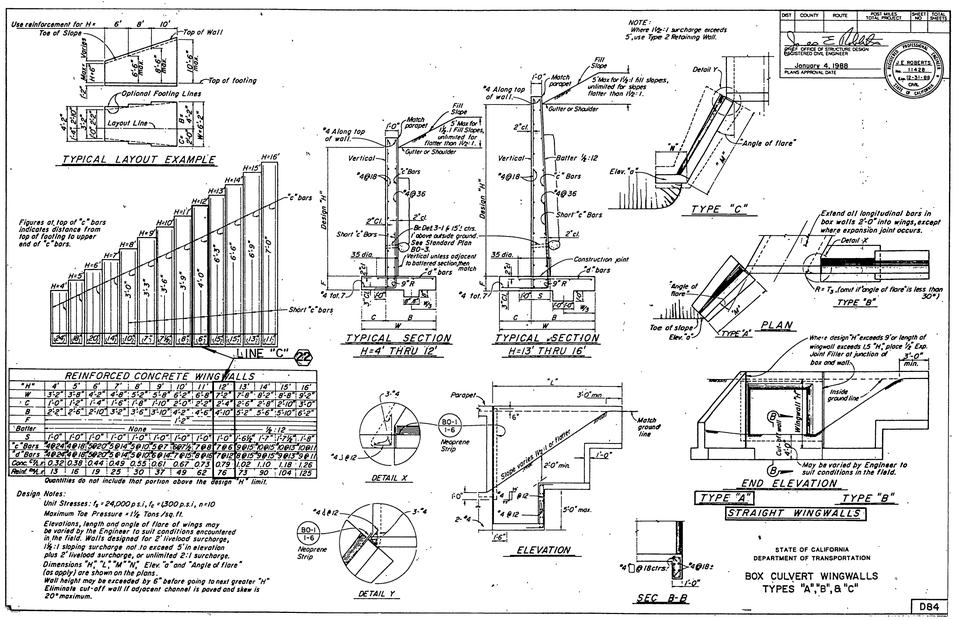

NOTE: Where 1½:1 surcharge exceeds 5', use Type 2 Retaining Wall.

STATE OF CALIFORNIA
DEPARTMENT OF TRANSPORTATION

BOX CULVERT WINGWALLS
TYPES "A","B" & "C"

D84

PIPE HEADWALLS AND WINGWALLS

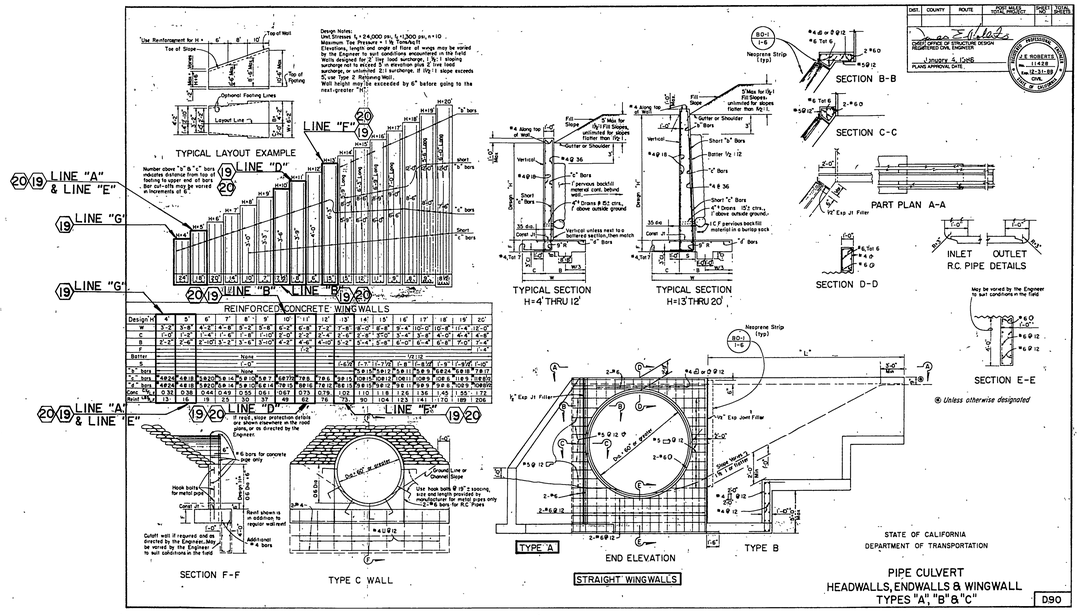

STATE OF CALIFORNIA
DEPARTMENT OF TRANSPORTATION

PIPE CULVERT
HEADWALLS, ENDWALLS & WINGWALL
TYPES "A", "B" & "C"

D90

PIPE HEADWALLS AND WINGWALLS

Underground Service Alert
Call: TOLL FREE
1-800
422-4133
TWO WORKING DAYS BEFORE YOU DIG

PRIVATE ENGINEERING NOTE

CONSTRUCTION CONTRACTOR AGREES THAT IN ACCORDANCE WITH GENERALLY ACCEPTED CONSTRUCTION PRACTICES, CONSTRUCTION CONTRACTOR WILL BE REQUIRED TO ASSUME SOLE AND COMPLETE RESPONSIBILITY FOR JOB SITE CONDITIONS DURING THE COURSE OF CONSTRUCTION OF THE PROJECT, INCLUDING SAFETY OF ALL PERSONS AND PROPERTY; THAT THIS REQUIREMENT SHALL BE MADE TO APPLY CONTINUOUSLY AND NOT BE LIMITED TO NORMAL WORKING HOURS, AND CONSTRUCTION CONTRACTOR FURTHER AGREES TO DEFEND, INDEMNIFY AND HOLD DESIGN PROFESSIONAL HARMLESS FROM ANY AND ALL LIABILITY, REAL OR ALLEGED, IN CONNECTION WITH THE PERFORMANCE OF WORK ON THIS PROJECT, EXCEPTING LIABILITY ARISING FROM THE SOLE NEGLIGENCE OF DESIGN PROFESSIONAL

REGISTERED PROFESSIONAL ENGINEER JOHN W. CARTY No. 17550 Exp. 6/30/93 CIVIL STATE OF CALIFORNIA

PREPARED UNDER THE DIRECTION OF: John W Carty
REGISTERED CIVIL ENGINEER NO. 17550
EXPIRATION DATE 6-30-93 DATE: 11/20/89
APPROVED BY:

J.F. DAVIDSON ASSOCIATES, INC.
CIVIL ENGINEERS • SURVEYORS • PLANNERS
P.O. BOX 493, RIVERSIDE, CA 92502, (714) 686-0844
11200 SO. MT. VERNON AVE. #D, COLTON, CA 92324, (714) 825-1082
73-080 EL PASEO, #103, PALM DESERT, CA 92260, (619) 346-6691

SCALE AS SHOWN
DATE APR. 1989

BENCH MARK: V.B. 10-64 ELEV. 1700.670 DATE: 1971
BRASS DISK FLUSH & MARKED V.B. 10-64, 0.6 MI. E. ON VAN BUREN BLVD. FROM CL. INT. OF VAN BUREN & WOOD RD., 205' N. OF VAN BUREN AT THE N.E. SIDE OF GRANITE BOULDERS, ON TOP OF 3'x15'x18' BOULDER.

MARK	REVISIONS	APPR.	DATE

DESIGNED BY ASW DRAWN BY CRG CHECKED BY ALR

CITY OF RIVERSIDE, CALIFORNIA
DEPARTMENT OF PUBLIC WORKS

	APPROVED BY	DATE
PRINCIPAL ENGINEER		
PARK DEPARTMENT		
TRAFFIC DIVISION		
CHIEF P.W. ENGR.	RH.6	6-6-90
		6/7/90

APPROVED BY: Barry Beck
DIRECTOR OF PUBLIC WORKS
DATE 6/7/90

TRACT 22653
STORM DRAIN
HEADWALL AND
WINGWALL DETAILS

FOR: S.I.C. CORP

AS BUILT 6/18/97 RJM

PROJECT NO. D-576
SHEET 10 OF 11
FILE NO. 8911168

INDEXED 7-3-90 GH

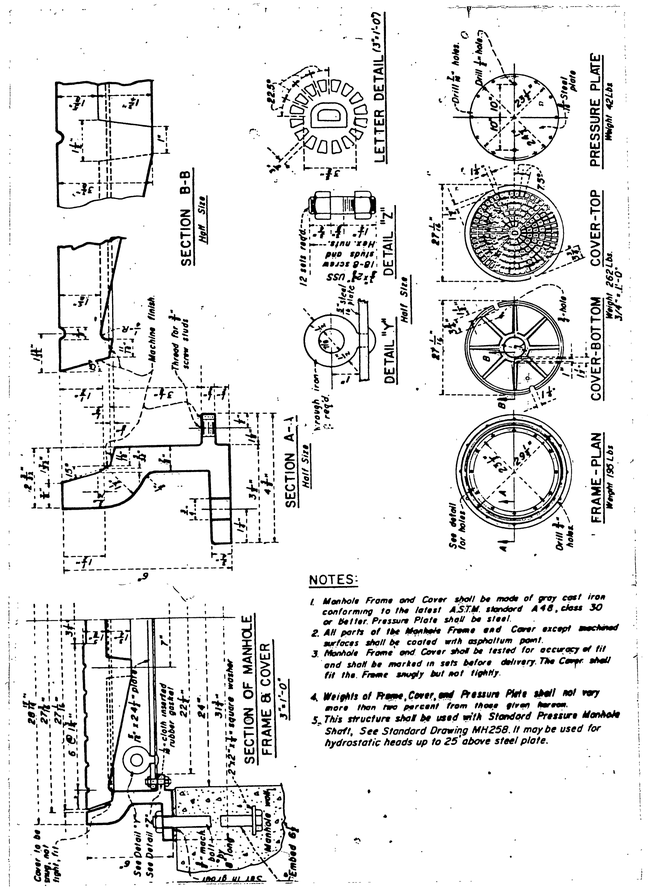

NOTES:

1. Manhole Frame and Cover shall be made of gray cast iron conforming to the latest A.S.T.M. standard A48, class 30 or better. Pressure Plate shall be steel.
2. All parts of the Manhole Frame and Cover except machined surfaces shall be coated with asphaltum paint.
3. Manhole Frame and Cover shall be tested for accuracy of fit and shall be marked in sets before delivery. The Contr. shall fit the Frame snugly but not tightly.
4. Weights of Frame, Cover, and Pressure Plate shall not vary more than two percent from those given hereon.
5. This structure shall be used with Standard Pressure Manhole Shaft, See Standard Drawing MH258. It may be used for hydrostatic heads up to 25' above steel plate.

MANHOLE FRAME & COVER PRESSURE TYPE

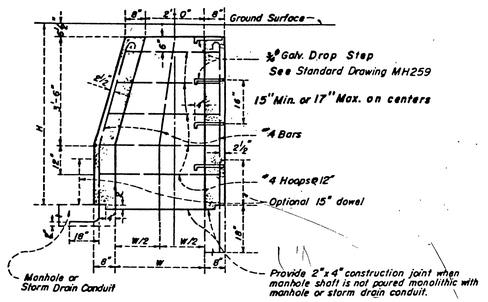

SECTION A-A

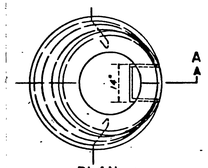

PLAN

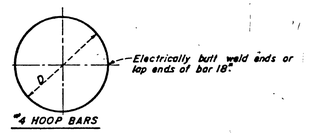

Where H is more than 4'-0", D=3'-1¾" for topmost hoop in shaft; each lower hoop in succession increases 3½" in diameter to a maximum of 4'-0" in the vertical portion of the shaft.

NOTES:

1. If "H" is less than 1'-6" W=2'-0"
   If "H" is between 1'-6 and 2'-6" W= 2'-6"
   If "H" is 2'-6" or more W=3'-0"
   If "H" is more than 4'-0½" bring walls vertically to 4'-0½" below surface and taper from 3'-0" to 2'-0" as shown.
2. This structure shall be used with Standard Pressure Manhole Frame and Cover, See Standard Drawing MH 256., it may be used for hydrostatic heads up to 25' above the steel plate.
3. Concrete shall be Class "A"

STANDARD PRESSURE MANHOLE SHAFT

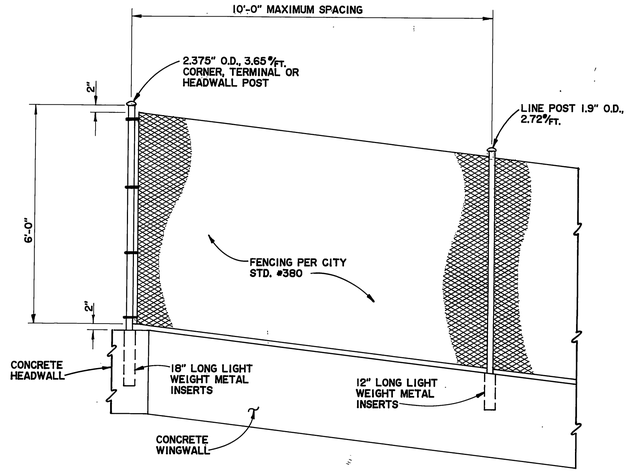

CHAIN LINK FENCE DETAIL

1" = 2'-0"

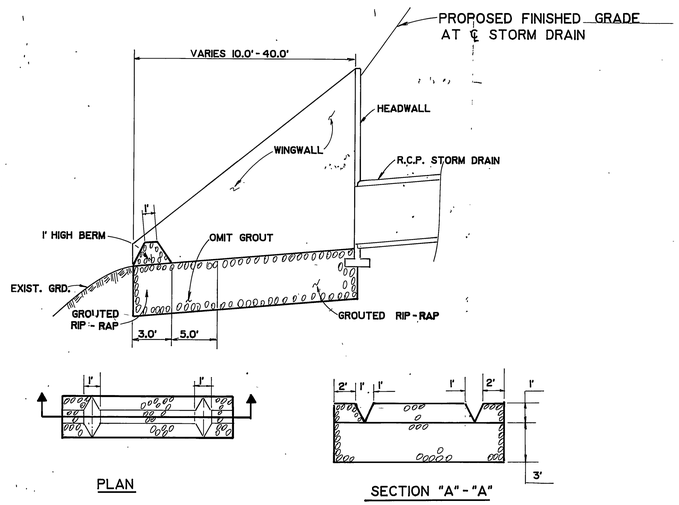

PLAN

SECTION "A"-"A"

PROPOSED BERM AT OUTLET STRUCTURES (TYPICAL)

AS BUILT 8/18/97 RWM

Underground Service Alert
Call: TOLL FREE
1-800 422-4133
TWO WORKING DAYS BEFORE YOU DIG

PRIVATE ENGINEERING NOTE

CONSTRUCTION CONTRACTOR AGREES THAT IN ACCORDANCE WITH GENERALLY ACCEPTED CONSTRUCTION PRACTICES, CONSTRUCTION CONTRACTOR WILL BE REQUIRED TO ASSUME SOLE AND COMPLETE RESPONSIBILITY FOR JOB SITE CONDITIONS DURING THE COURSE OF CONSTRUCTION OF THE PROJECT, INCLUDING SAFETY OF ALL PERSONS AND PROPERTY; THAT THIS REQUIREMENT SHALL BE MADE TO APPLY CONTINUOUSLY AND NOT BE LIMITED TO NORMAL WORKING HOURS, AND CONSTRUCTION CONTRACTOR FURTHER AGREES TO DEFEND, INDEMNIFY AND HOLD DESIGN PROFESSIONAL HARMLESS FROM ANY AND ALL LIABILITY, REAL OR ALLEGED, IN CONNECTION WITH THE PERFORMANCE OF WORK ON THIS PROJECT, EXCEPTING LIABILITY ARISING FROM THE SOLE NEGLIGENCE OF DESIGN PROFESSIONAL.

REGISTERED PROFESSIONAL ENGINEER JOHN W. CANTY No. 17550 Exp. 6/30/93 CIVIL STATE OF CALIFORNIA

PREPARED UNDER THE DIRECTION OF:
REGISTERED CIVIL ENGINEER NO. 17550
EXPIRATION DATE 6-30-93 DATE: 11/20/89
APPROVED BY:

J.F. DAVIDSON ASSOCIATES, INC.
CIVIL ENGINEERS • SURVEYORS • PLANNERS
P.O. BOX 493, RIVERSIDE, CA 92502, (714) 686-0844
11200 SO. MT. VERNON AVE. #D, COLTON, CA 92324, (714) 825-1082
73-080 EL PASEO, #103, PALM DESERT, CA 92260, (619) 346-5691
JFD ASSOCIATES

SCALE AS SHOWN
DATE APR. 1989

BENCH MARK: V.B. 10-64 ELEV. 1700.670 DATE: 1971
BRASS DISK FLUSH & MARKED V.B. 10-64, 0.6 MI. E. ON VAN BUREN BLVD. FROM CL. INT. OF VAN BUREN & WOOD RD., 205' N. OF VAN BUREN AT THE N.E. SIDE OF GRANITE BOULDERS, ON TOP OF 3'x15'x18' BOULDER.

MARK	REVISIONS	APPR.	DATE

DESIGNED BY ASW DRAWN BY CRG CHECKED BY ALR

CITY OF RIVERSIDE, CALIFORNIA
DEPARTMENT OF PUBLIC WORKS

APPROVED BY	BY	DATE
PRINCIPAL ENGINEER	—	—
PARK DEPARTMENT	—	—
TRAFFIC DIVISION	—	—
CHIEF P. W. ENGR.	RWL	6-7-90
	WLL	6/7/90

APPROVED BY
DIRECTOR OF PUBLIC WORKS
DATE 6/7/90

TRACT 22653
STORM DRAIN
PRESSURE MANHOLE DETAIL
FOR: S.I.C. CORP

PROJECT NO. D-576
SHEET 11 OF 11
FILE NO. 8911168

INDEXED 7-3-90 GD