RIVERSIDE CITY OF RIVERSIDE CALIFORNIA

PUBLIC WORKS DEPARTMENT

MULL AVENUE STORM DRAIN

JONES AVENUE TO TYLER STREET

SPECIFIC CONSTRUCTION NOTES

NUMBERS ABOVE 100 IN A HEXAGON ON THE PLAN REFER TO THE RESPECTIVE STANDARD DRAWING AND SHALL BE CONSTRUCTED ACCORDINGLY, UNLESS MODIFICATIONS ARE NOTED ON THE PLAN OR COVER SHEET. ANY NUMBER SHOWN BELOW THE STANDARD DRAWING NUMBER INDICATES THE SPECIFIC ALTERNATE TO BE CONSTRUCTED.

GENERAL CONSTRUCTION NOTES

1. EXISTING UTILITIES SHOWN ON THIS PLAN ARE PLOTTED FROM UTILITY RECORDS. THE CONTRACTOR IS REQUIRED TO TAKE DUE PRECAUTIONARY MEASURES TO LOCATE AND PROTECT ALL UTILITIES WHETHER OR NOT SHOWN ON THIS PLAN. IF THE COVER OF A UTILITY IS KNOWN, IT IS SHOWN IN THE PROFILE. UTILITIES SHOWN IN THE PROFILE AS ---⊼--⊖ INDICATES THAT THE COVER IS UNKNOWN, BUT THE UTILITY IS NOT EXPECTED TO CONFLICT WITH THE PROPOSED IMPROVEMENTS.
2. ALL ELEVATIONS SHOWN ON THE PLANS SHALL BE STAKED IN THE FIELD.
3. PRIME CONTRACTORS BIDDING THIS WORK SHALL HAVE A CLASS A OR C34 LICENSE.
4. CONSTRUCTION SHALL BE IN ACCORDANCE WITH THE CITY OF RIVERSIDE STANDARD DRAWINGS AND STANDARD SPECIFICATIONS FOR PUBLIC WORKS CONSTRUCTION, 1988 EDITION AND THE 1989 AND 1990 SUPPLEMENTS.
5. THE FOLLOWING CITY OF RIVERSIDE STANDARD DRAWINGS APPLY: 1, 2, 3, 412, 421, 431, 452, 453, 456.
6. THE FOLLOWING RIVERSIDE COUNTY FLOOD CONTROL DISTRICT STANDARD DRAWINGS APPLY: JS-227, MH-256, MH-258.

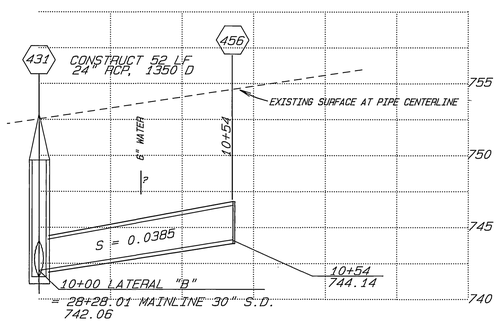

SCALE HORIZ. 1"=20'
VERT. 1"=5'

LATERAL "B"

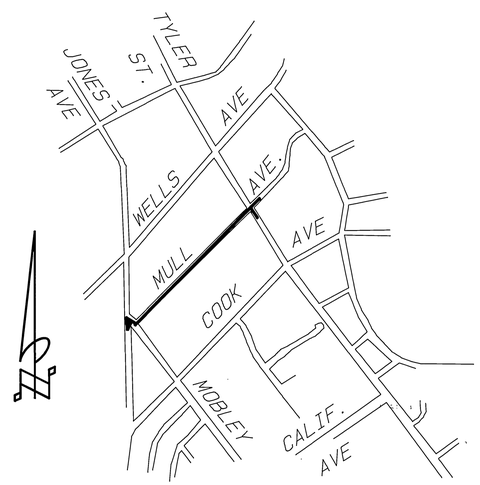

PROJECT LOCATION PLAN

NOT TO SCALE

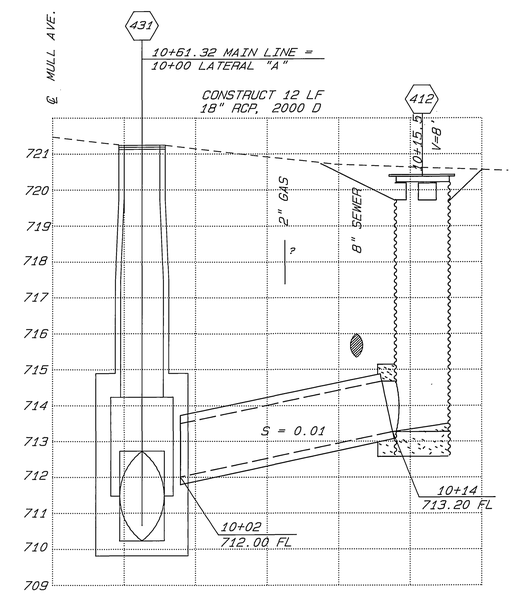

HORIZ. 1"=4'
VERT. 1"=2'

LATERAL "A"

IMPORTANT NOTICE

Section 4216/4217 of the Government Code requires a Dig Alert Identification Number to be issued before a "Permit to Excavate" will be valid. For your Dig Alert I.D. Number call Underground Service Alert TOLL FREE 1-800-422-4133 Two working days before you dig.

* AS-BUILT PER PLAN 5-20-92 LH
* AS-BUILT PER PLAN 1-27-92 LH

ENGINEER IN RESPONSIBLE CHARGE
HANS J. KAMRATH
R.C.E. 14712 expires 3/31/93
DATE 5/6/1991

REGISTERED PROFESSIONAL ENGINEER HANS J. KAMRATH NO: 14712 CIVIL STATE OF CALIFORNIA

MARK	REVISIONS	APPR.	DATE

DESIGNED BY DPY DRAWN BY DPY CHECKED BY

CITY OF RIVERSIDE
PUBLIC WORKS DEPARTMENT

APPROVED BY	DATE	BY
DEPUTY P.W. ENGINEER	5/8/91	RMG
PRINCIPAL ENGINEER	5/6/91	
SURVEYOR	5-6-91	RPH
CHIEF P.W. INSPECTOR	5-6-91	
TRAFFIC DIVISION	—	—
STREET SERVICES	5-6-	

APPROVED BY
PUBLIC WORKS DIRECTOR
DATE 5/9/91

MULL AVE. STORM DRAIN
JONES AVENUE TO TYLER STREET

HORIZ. SCALE: 1"= —— VERT. SCALE: 1"= ——

ACCOUNT NO. 09-573-445
D-587
SHEET 1 OF 3

INDEXED 8-9-91 LH

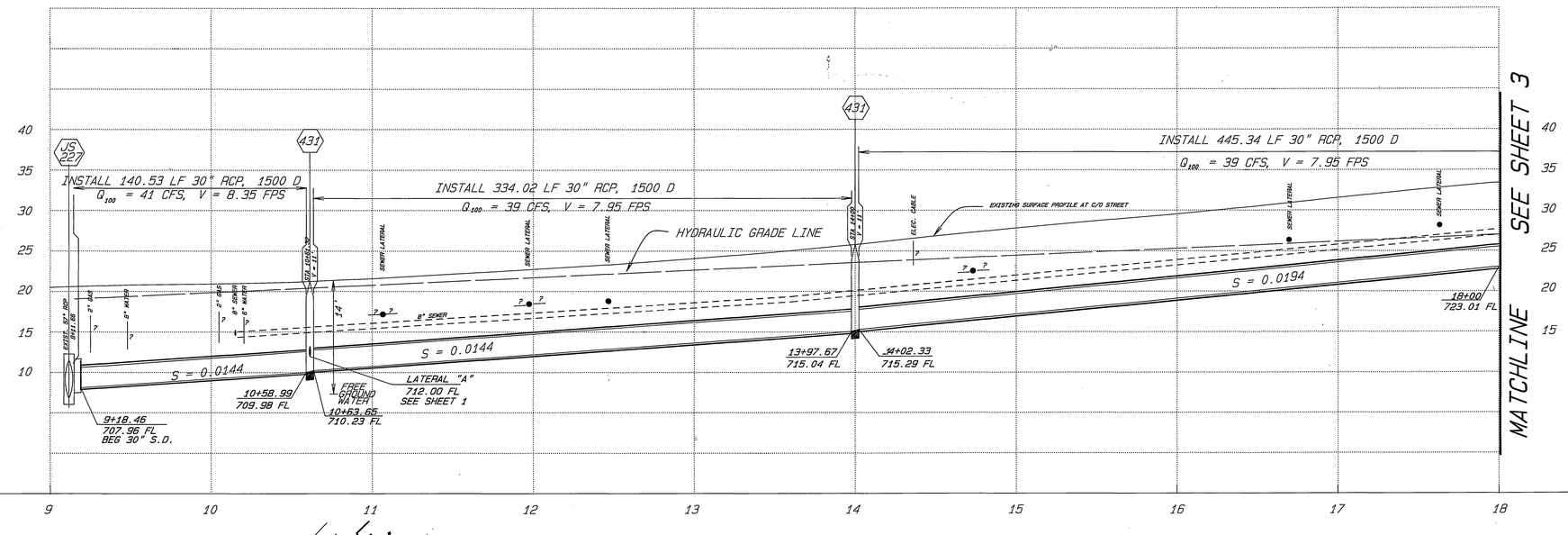

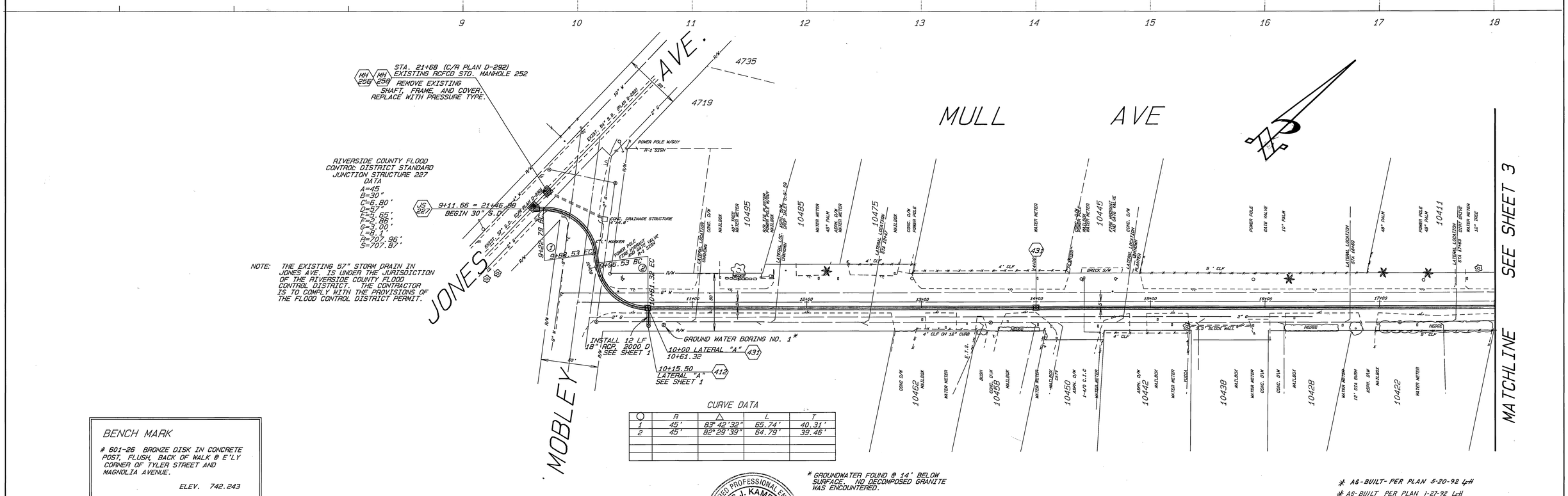

CURVE DATA

	R	Δ	L	T
1	45'	83° 42' 32"	65.74'	40.31'
2	45'	82° 29' 39"	64.79'	39.46'

BENCH MARK

601-26 BRONZE DISK IN CONCRETE POST, FLUSH, BACK OF WALK @ E'LY CORNER OF TYLER STREET AND MAGNOLIA AVENUE.

ELEV. 742.243

* GROUNDWATER FOUND @ 14' BELOW SURFACE. NO DECOMPOSED GRANITE WAS ENCOUNTERED.

* AS-BUILT- PER PLAN 5-20-92 HH
* AS-BUILT PER PLAN 1-27-92 HH

ENGINEER IN RESPONSIBLE CHARGE
HANS J. KAMRATH
R.C.E. 14712 expires 3/31/93
DATE 4/25/1991

REGISTERED PROFESSIONAL ENGINEER HANS J. KAMRATH NO: 14712 CIVIL STATE OF CALIFORNIA

MARK	REVISIONS	APPR.	DATE

DESIGNED BY DPY DRAWN BY DPY CHECKED BY

CITY OF RIVERSIDE
PUBLIC WORKS DEPARTMENT

APPROVED BY	DATE	BY
DEPUTY P.W. ENGINEER	3/5/91	RMG
PRINCIPAL ENGINEER	3/11/91	[illegible]
SURVEYOR	4/29/91	[illegible]
CHIEF P.W. INSPECTOR	4/29/91	[illegible]
TRAFFIC DIVISION		
STREET SERVICES	4-26-91	[illegible]

APPROVED BY
PUBLIC WORKS DIRECTOR
DATE 5/9/91

MULL AVE. STORM DRAIN
JONES AVENUE TO TYLER STREET

ACCOUNT NO. 09-573-445

D-587

SHEET 2 OF 3

HORIZ. SCALE: 1"= 40' VERT. SCALE: 1"= 8'

INDEXED 8-9-91 HH

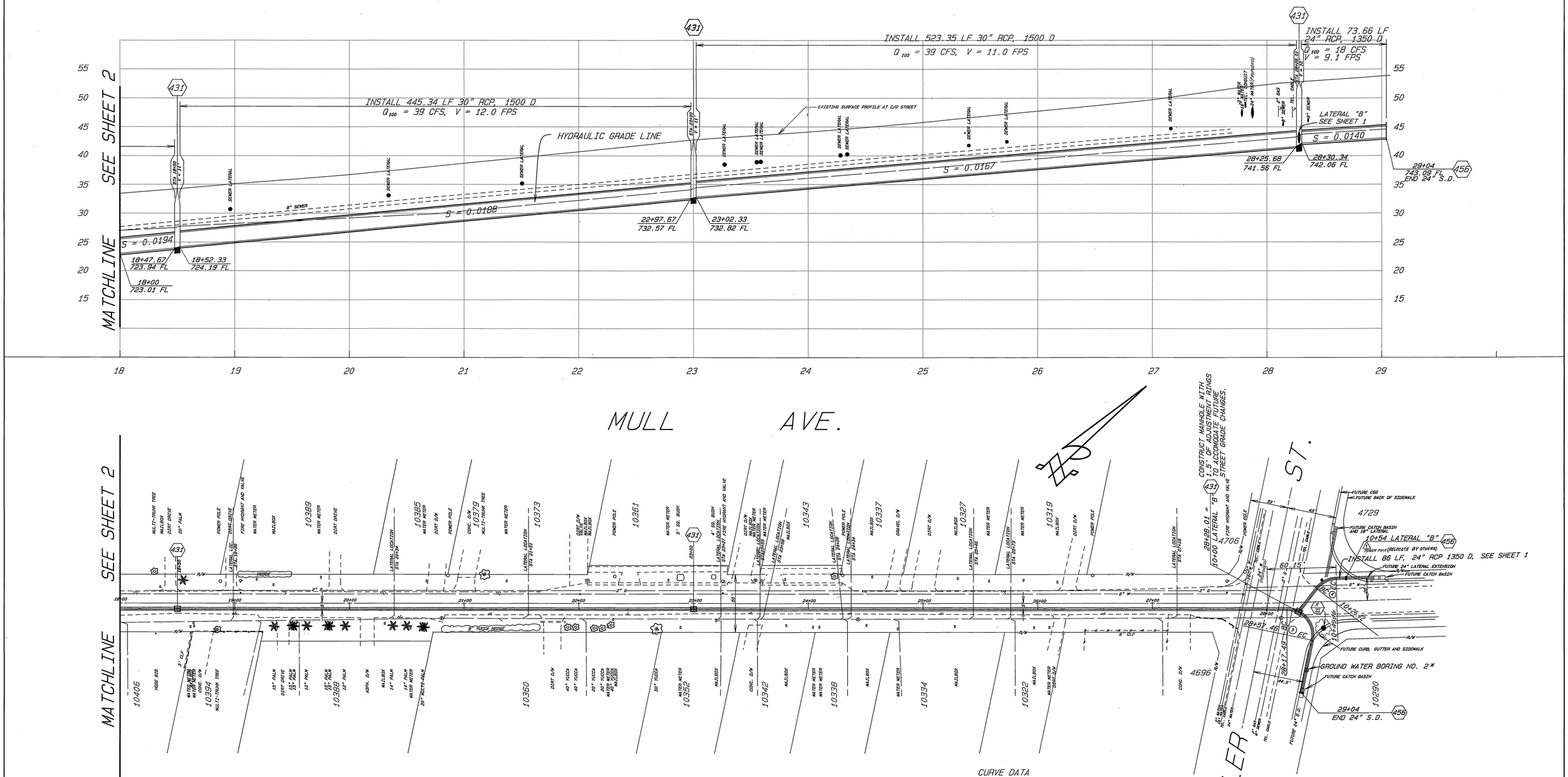

* NO GROUNDWATER WAS FOUND. DECOMPOSED GRANITE BEGINS @ 6'-7' BELOW SURFACE.

CURVE DATA

○	R	△	L	T
3	22.50'	101°46'39"	39.97'	27.68'
4	22.50'	51°02'27"	20.04	10.74'

BENCH MARK

601-26 BRONZE DISK IN CONCRETE POST, FLUSH, BACK OF WALK @ E'LY CORNER OF TYLER STREET AND MAGNOLIA AVENUE.

ELEV. 742.243

ENGINEER IN RESPONSIBLE CHARGE

HANS J. KAMRATH
R.C.E. 14712 expires 3/31/93
DATE 5/6/1991

REGISTERED PROFESSIONAL ENGINEER HANS J. KAMRATH NO: 14712 CIVIL STATE OF CALIFORNIA

MARK	REVISIONS	APPR.	DATE
1	ADDED TELE. POLE		5-16-91

DESIGNED BY DPY DRAWN BY DPY CHECKED BY

CITY OF RIVERSIDE
PUBLIC WORKS DEPARTMENT

APPROVED BY	DATE	BY
DEPUTY P.W. ENGINEER	5/6/91	
PRINCIPAL ENGINEER	5/6/91	
SURVEYOR	5-6-91	
CHIEF P.W. INSPECTOR	5-6-91	
TRAFFIC DIVISION	—	
STREET SERVICES	5-6-91	

APPROVED BY
PUBLIC WORKS DIRECTOR
DATE 5/9/91

MULL AVE. STORM DRAIN

JONES AVENUE TO TYLER STREET

HORIZ. SCALE: 1"= 40' VERT. SCALE: 1"= 8'

ACCOUNT NO. 09-573-445

D-587

SHEET 3 OF 3

* AS-BUILT PER PLAN 5-20-92 LH
* AS-BUILT PER PLANS 1-27-92 LH

INDEXED 8-9-91 LH