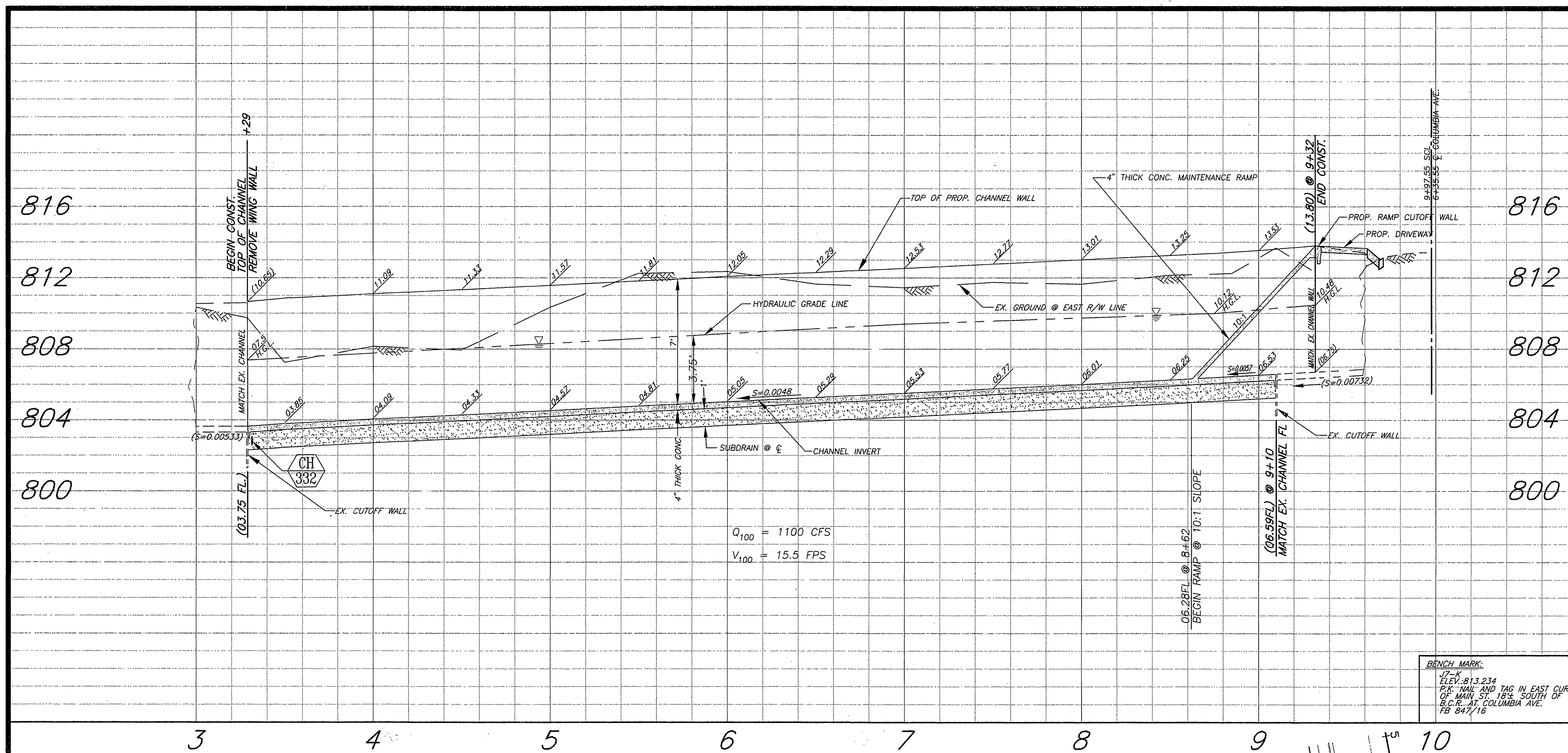

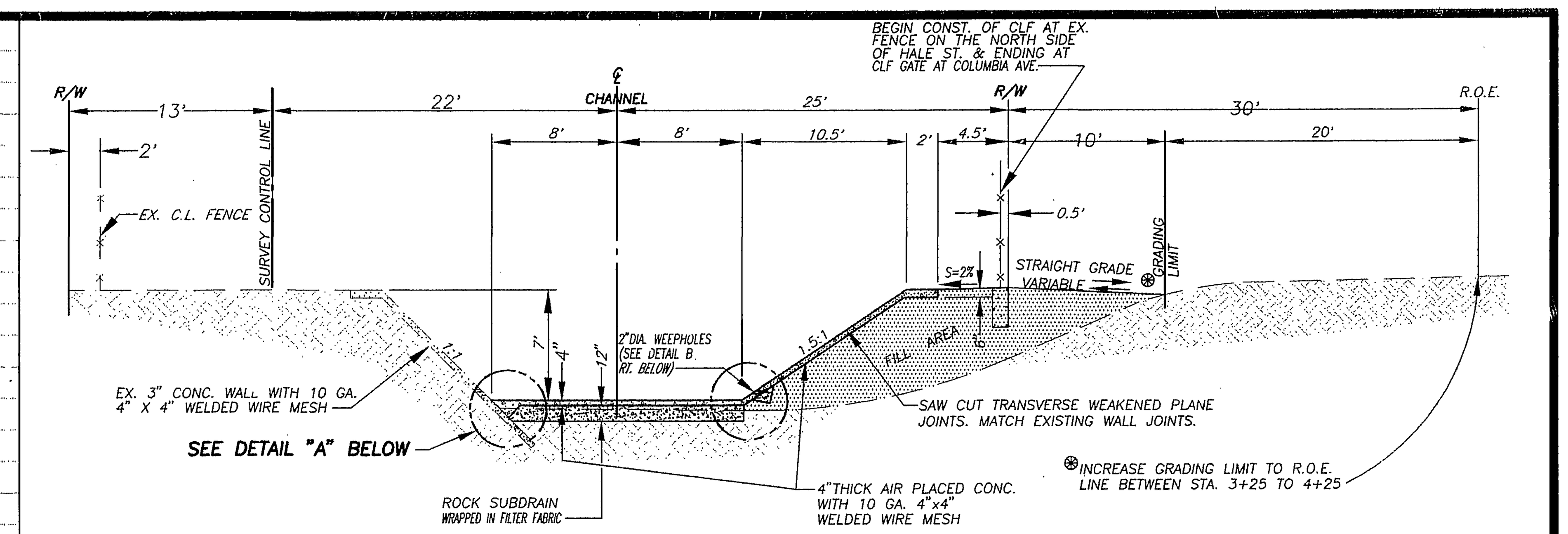

TYPICAL SECTION (SCALE: 1" = 8')
STA. 3+29 TO 8+13

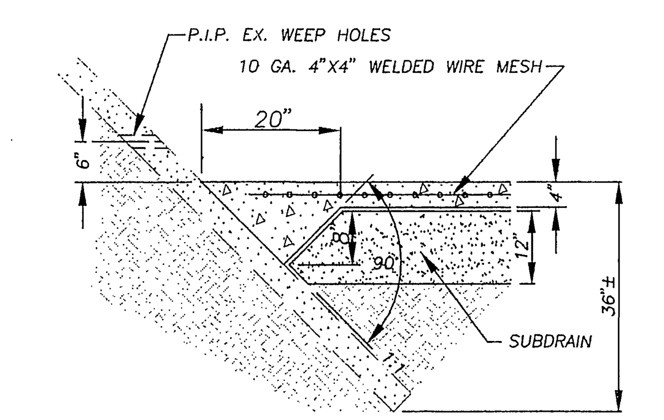

DETAIL "A"
SCALE: 1" = 2'

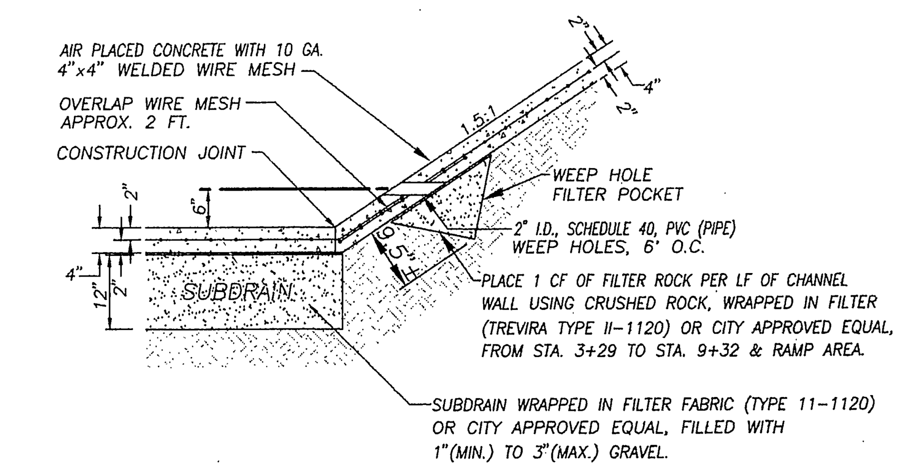

DETAIL "B"
SCALE: 1" = 2'

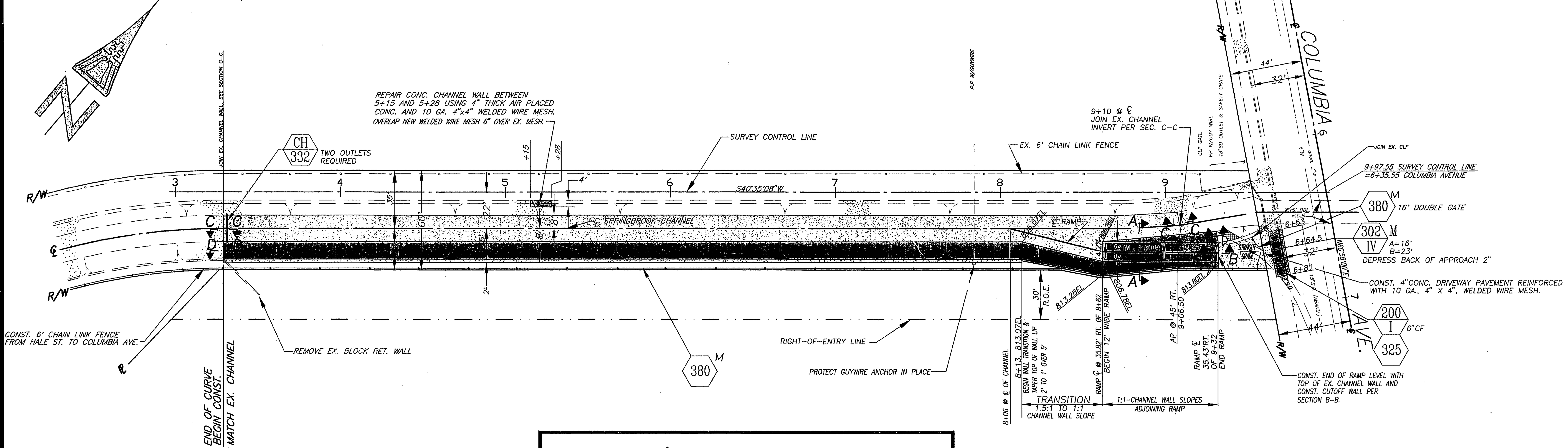

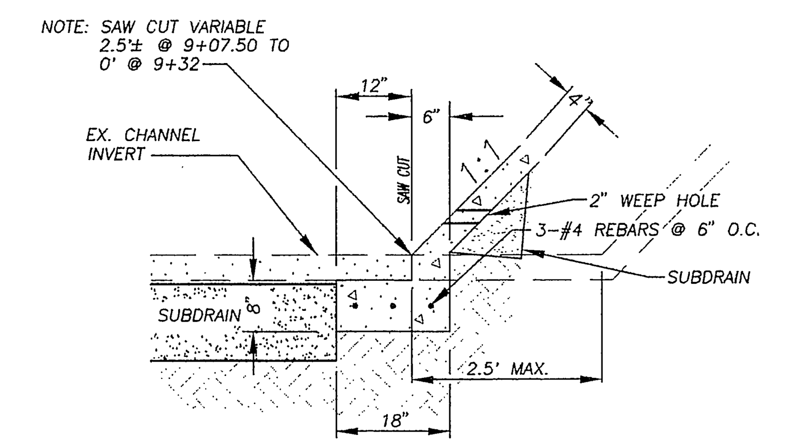

DETAIL "C"
STA. 9+10 TO 9+32
SCALE : 1" = 2'

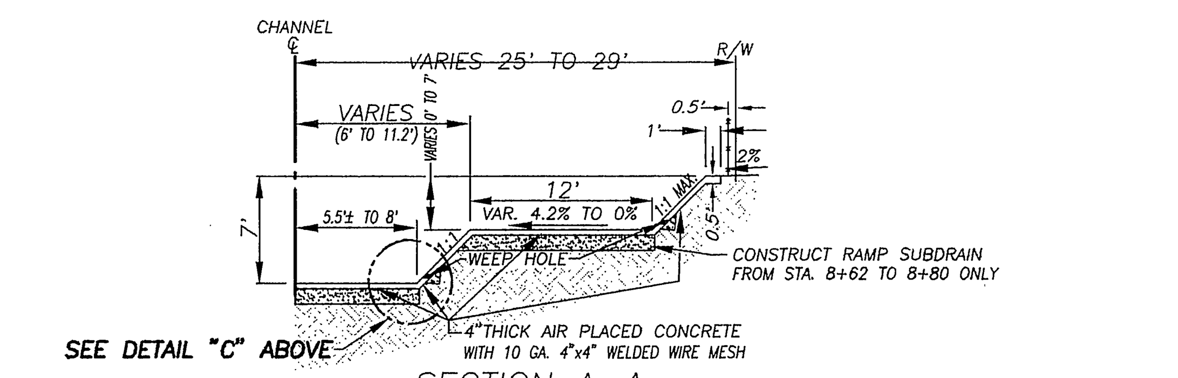

SECTION A-A
STA. 8+62 TO 9+32
SCALE : 1" = 10'

GENERAL CONSTRUCTION NOTES:

1. EXISTING UTILITIES SHOWN ON THIS PLAN ARE PLOTTED FROM UTILITY RECORDS, THE CONTRACTOR IS REQUIRED TO TAKE DUE PRECAUTIONARY MEASURES TO LOCATE AND PROTECT ALL UTILITIES WHETHER OR NOT SHOWN ON THIS PLAN.
2. PRIME CONTRACTORS, BIDDING THE WORK SHOWN HEREON, SHALL HAVE AN A, C8 OR C12 LICENSE.
3. 30' RIGHT-OF-ENTRY HAS BEEN OBTAINED FOR WORK SHOWN OUTSIDE OF CITY RIGHT-OF-WAY.
4. UTILITIES, THAT CONFLICTED WITH THIS PROJECT'S CONSTRUCTION, HAVE BEEN RELOCATED.
5. ALL ELEVATIONS, SHOWN ON PLAN, SHALL BE STAKED IN THE FIELD. D/W APPROACH DESIGN ELEVATIONS TO BE DETERMINED DURING CONSTRUCTION.
6. SAW CUT TRANSVERSE WEAKENED PLANE JOINTS, IN LINE (ACROSS BOTH INVERT AND WALL) , AT 30 FOOT INTERVALS OR AS DIRECTED BY THE ENGINEER.
7. APPLY EPOXY RESIN ADHESIVE AT INTERFACES OF EXISTING AND PROPOSED CONCRETE STRUCTURES.

SPECIFIC CONSTRUCTION NOTES:

380 M — CONSTRUCT 6' HIGH CHAIN LINK FENCE PER STD. DWG. 380. INCLUDE THE 3 STRAND BARBED WIRE ARM~~, CAP AND TWO GATE KEEPERS.~~

CH 332 — RIVERSIDE COUNTY FLOOD CONTROL AND WATER CONSERVATION DISTRICT STANDARD DRAWING, DATED MAY 1971.

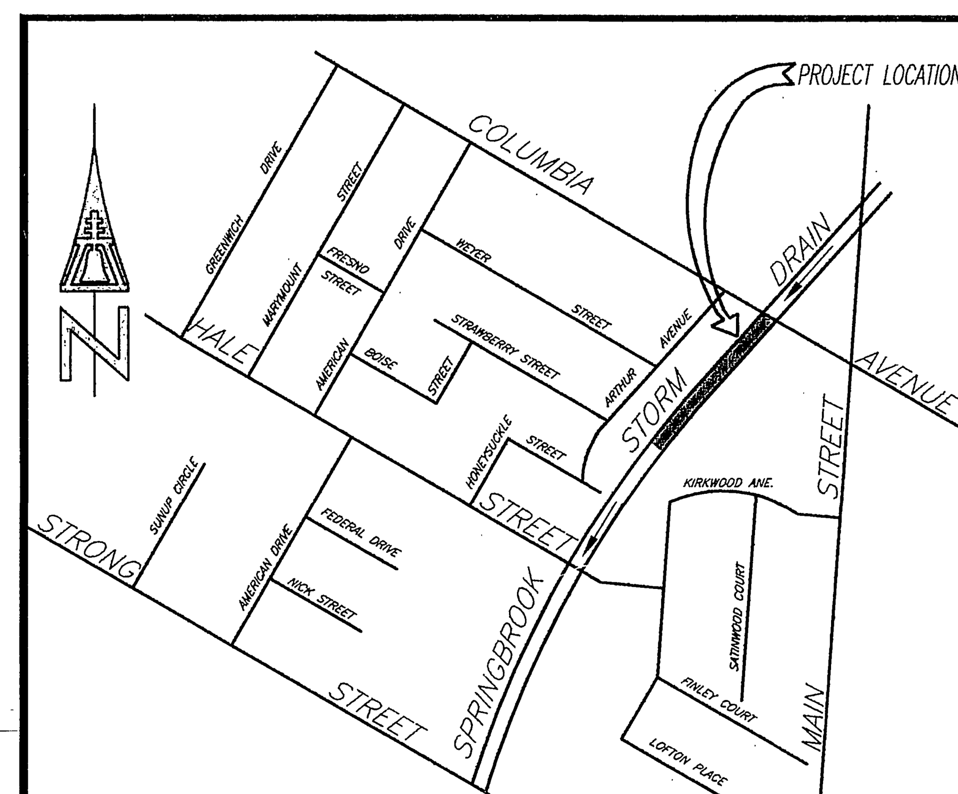

LOCATION MAP
N.T.S.

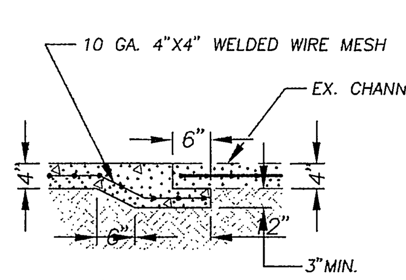

SECTION D-D
WALL SPLICE
STA. 3+29 & 9+32
SCALE : 1" = 2'

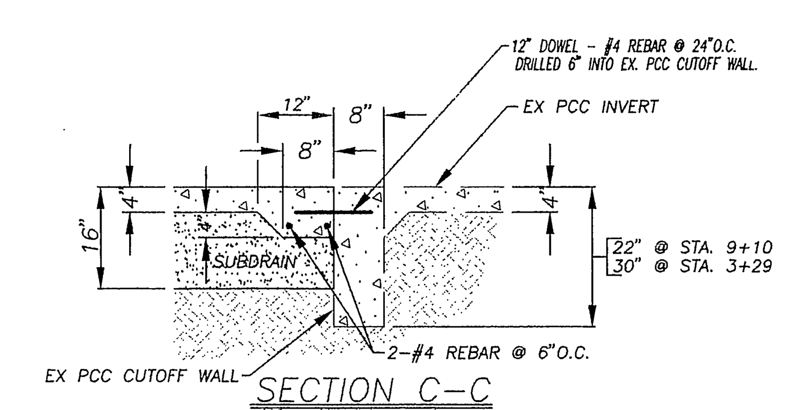

SECTION C-C
STA. 3+29 & 9+10
SCALE : 1" = 2'

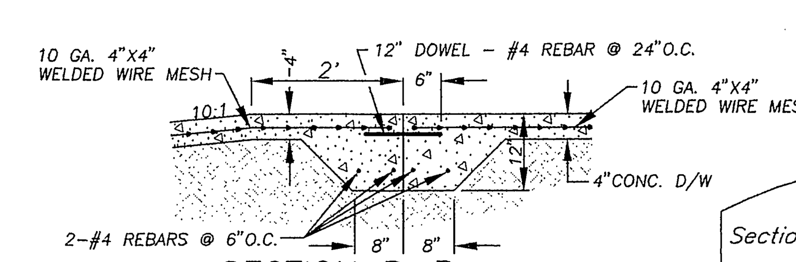

SECTION B-B
RAMP CUTOFF WALL DETAIL
SCALE : 1" = 2'

MAINTENANCE RAMP
STA. 8+62 TO 9+32

IMPORTANT NOTICE
Section 4216/4217 of the Government Code requires a Dig Alert Identification Number to be issued before a "Permit to Excavate" will be valid. For your Dig Alert I.D. Number call Underground Service Alert
TOLL FREE 1-800-422-4133
Two working days berfore you dig.

ENGINEER IN RESPONSIBLE CHARGE
Ronald C. Mueller
RONALD C. MUELLER
R.C.E. 29510 expires 3/31/95
DATE 4-14-94

REGISTERED PROFESSIONAL ENGINEER RONALD C. MUELLER NO. 29510 Expires 3/31/95 CIVIL STATE OF CALIFORNIA

MARK	REVISIONS	APPR.	DATE

DESIGNED BY FYL DRAWN BY LFH,RJM CHECKED BY RCM

CITY OF RIVERSIDE
PUBLIC WORKS DEPARTMENT

APPROVED BY	DATE	BY
DEPUTY P.W. DIRECTOR		
PRINCIPAL ENGINEER		
CHIEF P.W. INSPECTOR		
SURVEYOR	4-18-94	JWS
STREET SERVICES	4/18/94	RWL

APPROVED BY
PUBLIC WORKS DIRECTOR
DATE 5/2/94

SPRINGBROOK CHANNEL
BETWEEN HALE ST. AND COLUMBIA AVE.
HORIZ. SCALE: 1"=40' VERT. SCALE: 1"=4'

ACCOUNT NO. 410-541400-440301-20037
D-589
SHEET 1 OF 1

INDEXED 11-14-94 LFH