STORM DRAIN GENERAL NOTES

1. ALL WORK AND MATERIALS SHALL COMPLY WITH THE SPECIFICATIONS AND STANDARD PLANS OF THE RIVERSIDE COUNTY FLOOD CONTROL AND WATER CONSERVATION DISTRICT AND STANDARD SPECIFICATIONS FOR PUBLIC WORKS CONSTRUCTION - CURRENT EDITION. THESE DRAWINGS AND THE DATA HEREIN ARE MADE PART OF THE SPECIFICATIONS.
2. ALL ELEVATIONS SHOWN ARE IN FEET BASED ON U.S.C. & G.S. DATUM.
3. TIES TO CATCH BASINS ARE FROM THE CURB RETURN TO THE CENTERLINE OF THE CATCH BASIN UNLESS OTHERWISE SHOWN. WHERE NO TIE IS SHOWN THE LOCAL DEPRESSION SHALL START AT THE CURB RETURN.
4. PIPE CONNECTED TO MAINLINE SHALL CONFORM TO J.S. NO.1 UNLESS OTHERWISE NOTED.
5. OPENINGS RESULTING FROM THE CUTTING OR PARTIAL REMOVAL OF EXISTING CULVERTS, PIPES OR SIMILAR STRUCTURES TO BE ABANDONED SHALL BE SEALED WITH 6" OF CLASS "B" CONCRETE.
6. ELEVATIONS OF UTILITIES ARE APPROXIMATE UNLESS OTHERWISE NOTED.
7. ALL STATIONING REFERS TO CENTERLINE OF CONSTRUCTION.
8. CONTACT HOWARD DICKERSON AT R.C.F.C. (PHONE 787-6668) CONCERNING ENCROACHMENT PERMITS.
9. THE CONTRACTOR SHALL CONSTRUCT THE FLOOD CONTROL IMPROVEMENTS SHOWN ON THE DRAWINGS IN CONFORMANCE WITH THE REQUIREMENTS OF THE RIVERSIDE COUNTY FLOOD CONTROL AND WATER CONSERVATION DISTRICT'S SPECIAL PROVISIONS AND DETAILED SPECIFCATIONS DATED SEPTEMBER 1984, AND DESIGN MANUAL STANDARD DRAWINGS DATED MAY 1971.
10. BACKFILL MATERIAL TO HAVE A S.E. OF 30 (MIN).
11. BACKFILL TO BE IN 8" LIFTS IF TRENCH BOTTOM AND SIDES HAVE A S.E. OF LESS THAN 20.
12. STOMPING OF BACKFILL OR AT THE DIRECTION OF THE SOILS ENGINEER PERMITTED IN 3' LIFTS.
13. IF ANY EXISTING UTILITIES OR ANY OTHER FACILITIES CONFLICT WITH THE PROPOSED IMPROVEMENTS, WORK SHALL STOP AND THE ENGINEER NOTIFIED IMMEDIATELY.
14. ALL UTILITIES SHALL BE INSTALLED, TESTED AND APPROVED PRIOR TO STREET PAVING.
15. REBAR SHALL BE GRADE 60 BILLET STEEL CONFORMING TO ASTM A615.
16. SEPARATE PERMITS SHALL BE REQUIRED FOR ANY IMPROVEMENT WORK IN THE PUBLIC RIGHT-OF-WAY.
17. ALL BACKFILL OF TRENCHES TO BE CERTIFIED BY A SOILS ENGINEER (90% MINIMUM COMPACTION).
18. ALL CONCRETE STRUCTURES THAT COME IN CONTACT WITH THE ONSITE SOILS SHALL BE CONSTRUCTED WITH THE TYPE 5 CEMENT UNLESS DEEMED UNNECESSARY BY SOLUBLE SULPHATE-CONTENT TESTS CONDUCTED BY THE SOILS ENGINEER.
19. CONCRETE SHALL HAVE A MINIMUM ULTIMATE COMPRESSIVE STRENGTH AT 28 DAYS OF 3250 PSI UNLESS OTHERWISE STATED ON THE PLANS. ALL CONCRETE SHALL BE 6 SACK (CALTRANS CLASS A). IF PNEUMATICALLY PLACED 6.5 SACK.
20. PIPE NOTED IN PROFILE WITH AN ASTERISK (*) REQUIRES 1-1/2" THICKENED INVERT. THE CONCRETE COVER ON THE INSIDE OF ALL CONCRETE PIPE MUST BE INCREASED TO PROVIDE A MINIMUM OF 1-1/2" OVER THE REINFORCING OR 2" THICKENED INVERT FOR C.I.P.P. WHEN THE DESIGN VELOCITIES EXCEED 20 FEET PER SECOND. THE CONCRETE DESIGN STRENGTH IN THESE REACHES SHALL BE f_c=5000 P.S.I. FOR VELOCITIES EXCEEDING 20 FEET PER SECOND AND f_c=6000 P.S.I. FOR VELOCITIES EXCEEDING 30 FEET PER SECOND.

NOTIFICATIONS

NOTE: THE CONTRACTOR SHALL NOTIFY THE FOLLOWING UTILITIES OR AGENCIES 48 HOURS PRIOR TO STARTING CONSTRUCTION OR EXCAVATION:

RIVERSIDE COUNTY ROAD EASEMENT CONSTRUCTION SECTION:	(714) 787-2031
GENERAL TELEPHONE	1 (800) 422-4133
WESTERN MUNICIPAL WATER DISTRICT:	(714) 780-4170
SOUTHERN CALIFORNIA GAS COMPANY:	(714) 845-2617
SOUTHERN CALIFORNIA EDISON COMPANY (AT PERRIS OFFICE):	(714) 657-5154

ENGINEER'S NOTICE

CONTRACTOR AGREES THAT HE SHALL ASSUME SOLE AND COMPLETE RESPONSIBILITY FOR JOB SITE CONDITIONS DURING THE COURSE OF CONSTRUCTION OF THIS PROJECT, INCLUDING SAFETY OF ALL PERSONS AND PROPERTY; THAT THIS REQUIREMENT SHALL APPLY CONTINUOUSLY AND NOT BE LIMITED TO NORMAL WORKING HOURS; AND THAT THE CONTRACTOR SHALL DEFEND, INDEMNIFY AND HOLD THE OWNER AND ENGINEER HARMLESS FROM ANY AND ALL LIABILITY, REAL OR ALLEGED, IN CONNECTION WITH THE PERFORMANCE OF WORK ON THIS PROJECT, EXCEPTING FOR LIABILITY ARISING FROM THE SOLE NEGLIGENCE OF THE OWNER OR ENGINEER.

ALL UNDERGROUND UTILITIES OR STRUCTURE, REPORTED OR FOUND ON PUBLIC RECORDS, ARE INDICATED WITH THEIR APPROXIMATE LOCATION AND EXTENT. THE OWNER, BY ACCEPTING THESE PLANS OR PROCEEDING WITH THE IMPROVEMENTS HEREON, AGREES TO ASSUME LIABILITY AND TO HOLD THE ENGINEER HARMLESS FOR ANY DAMAGES RESULTING FROM THE EXISTENCE OF UNDERGROUND UTILITIES OR STRUCTURES NOT REPORTED OR INDICATED ON PUBLIC RECORDS, OR THOSE CONSTRUCTED AT VARIANCE WITH REPORTED OR RECORD LOCATIONS. THE CONTRACTOR IS REQUIRED TO TAKE DUE PRECAUTIONARY MEASURES TO PROTECT THE UTILITIES OR STRUCTURES SHOWN AND ANY OTHERS FOUND AT THE SITE. IT SHALL BE THE CONTRACTOR'S RESPONSIBILITY TO NOTIFY THE OWNERS OF ALL UTILITIES STRUCTURES CONCERNED BEFORE STARTING WORK.

CARE SHOULD BE TAKEN TO PREVENT GRADED DITCHES AND SWALES FROM UNDERMINING STREET IMPROVEMENTS. UPON INSPECTION OF THE SITE, THE CITY ENGINEER MAY REQUIRE TEMPORARY GUNITE SWALES, ENTERING OR LEAVING IMPROVEMENTS.

PLAN AND PROFILE FOR THE IMPROVEMENT OF STORM DRAIN FOR

TRACT NO. 19411-1,2,3

COUNTY OF RIVERSIDE

PHASE I, II, III

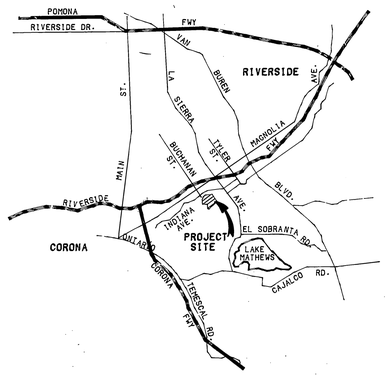

N.T.S.

VICINITY MAP

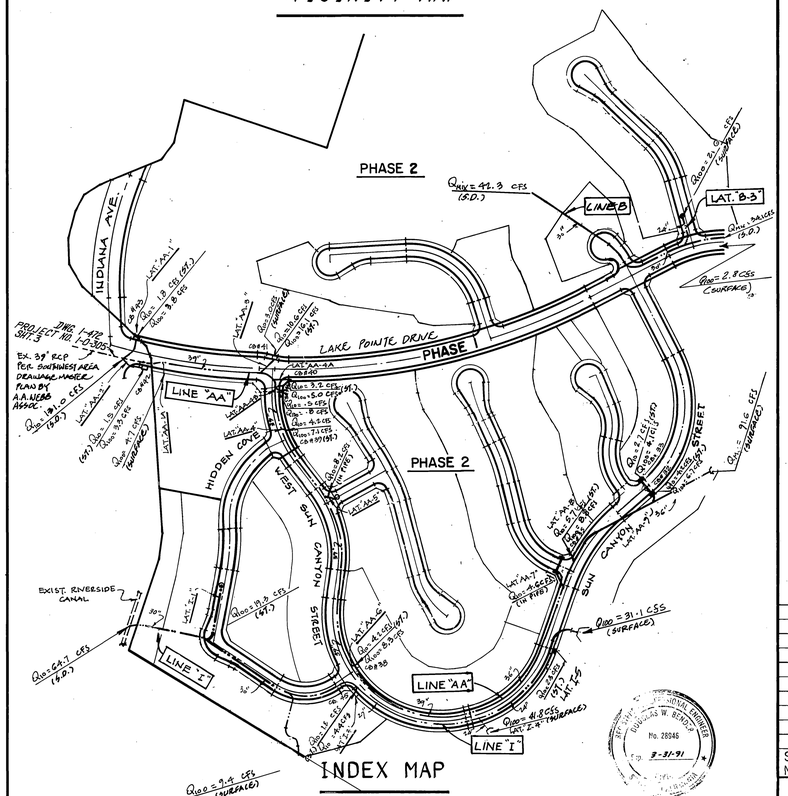

INDEX MAP

SCALE 1"= 200'

9	DETAIL SHEET		
8	DETAIL SHEET		
7	LINE " I "	STA. 17+95.00 TO STA. 24+50.00	END LINE "I"
6	LINE " I "	STA. 10+00.00 TO STA. 17+95.00	
5	LINE " B "	STA. 10+34.23 TO STA. 16+77.72	
4	LINE "AA"	STA. 28+79.08 TO STA. 35+90.29	END LINE "AA"
3	LINE "AA"	STA. 19+38.95 TO STA. 28+79.08	CONTINUED
2	LINE "AA"	STA. 10+00.00 TO STA. 19+38.95	
1	TITLE SHEET		
SHT. NO.	DESCRIPTION	STATION	REMARKS

SHEET INDEX

CONSTRUCTION NOTES & ESTIMATED QUANTITIES

CONSTR. NOTE NO	ITEMS TO BE CONSTRUCTED OR INSTALLED	TOTAL	UNIT
1	CONSTRUCT 18" R.C.P. CLASS IV (C.I.P.P. IS ALTERNATIVE)	731	LF
2	CONSTRUCT 24" R.C.P. CLASS IV (C.I.P.P. IS ALTERNATIVE)	284	LF
3	CONSTRUCT 27" R.C.P. "D"- LOAD PER PROFILE. (C.I.P.P. IS ALTERNATIVE)	531	LF
4	CONSTRUCT 30" R.C.P. "D"- LOAD PER PROFILE. (C.I.P.P. IS ALTERNATIVE)	1260	LF
6	CONSTRUCT 36" R.C.P. "D"- LOAD PER PROFILE. (C.I.P.P. IS ALTERNATIVE)	986	LF
8	CONST. CONCRETE COLLAR PER RCFC & WCD STD. NO. M803.	7	EA
9	CONSTRUCT MANHOLE NO.1 PER RCFC & WCD STD. NO. MH251.	7	EA
10	CONSTRUCT MANHOLE NO.2 PER RCFC & WCD STD. NO. MH252.	4	EA
11	CONSTRUCT CATCH BASIN NO.1 (SIZE PER PLAN) PER RCFC & WCD STD. NO.CB100.	2	EA
12	CONSTRUCT CATCH BASIN NO.6 (SIZE PER PLAN) PER RCFC & WCD STD. NO.CB102.	4	EA
13	CONSTRUCT CURB INLET CATCH BASIN (W=4') PER RIVERSIDE COUNTY ROAD IMPROVEMENT STD. N°300	1	EA
15	CONSTRUCT PIPE ANCHOR PER DETAIL ON SHEET N° 8.	3	EA
17	CONSTRUCT CHAIN LINK FENCE PER RCFC & WCD. STD. N° M801	31	LF
18	CONSTRUCT CONCRETE BULKHEAD AT END OF PIPE PER R.C.F.C. STD. DWG. M816	4	EA
21	CONSTRUCT CATCH BASIN N° 4 PER RCFC & WCD. STD. N° CB101.	2	EA
22	CONSTRUCT ENERGY DISSIPATOR PER DETAIL ON SHEET N° 8	2	EA
24	CONSTRUCT MODIFIED CONC. COLLAR TO PIPE ANCHOR PER DETAIL ON SHEET N° 8	4	EA
25	CONSTRUCT JUNCTION STRUCTURE N° 2 PER RCFC & WCD. STD. N° JS227	5	EA
27	CONSTRUCT INLET STRUCTURE PER DETAIL ON SHEET N° 9	4	EA
28	CONSTRUCT C.S.P. RISER PER DETAIL ON SHEET N° 9	5	EA
29	CONSTRUCT 39" RCP "D" LOAD PER PROFILE. (C.I.P.P. IS ALTERNATIVE)	1573	LF
19	REMOVE EXISTING CONCRETE BULKHEAD AND JOIN NEW PIPE	1	EA
32	CONSTRUCT MANHOLE N° 4 PER RCFC & WCD. STD. N° MH254	2	EA

* AS-BUILT PER PLANS 1-27-92 GH

REVISIONS:

1. ALTERNATIVE USE OF C.I.P.P. TO R.C.P. WHERE SHOWN — 5/10/89 GH
2. REVISED LINE "A-A" AND LATERAL "AA-6" (SHEET 3) 5/30/89 M.V.
3. LOWER S.D. FROM STA. 17+24.17 TO STA. 30+58.65 (SHEETS 2,3,4) 8/10/89
4. LOWER S.D. FROM STA. 32+52.23 TO STA. 35+90.29 (SHEET 4) 8/10/89
5. ADD T.W.C. BLOW-OFF CONNECTION DETAIL AT STA 35+00 (SHEET 4) 9/8/89
6. ADDED REVISED OUTFALL DETAIL FOR LINE "I" ON SHT. No. 6. R. DeMeath 6/6/91

6/14/91 — Deputy PWD Director, City of Riverside

APPROVED BY: — DATE: 12-16-88 — REGISTERED CIVIL ENGINEER NO. 28946, REGISTRATION EXPIRES 3-31-91

APPROVED BY: — DATE: 2/27/89 — RIVERSIDE COUNTY, CALIF. FOR ROAD COMMISSIONER

Church Engineering, Inc.
Consulting Engineers, Planners, Surveyors
2501 Alton Avenue, Irvine, California 92714, Telephone (714) 660-8600

SCALE: AS SHOWN

DATE

BENCH MARK: EL. 797.286
CITY OF RIVERSIDE BENCH MARK NAIL & TAG IN N'LY CEMENT BANK OF R.V.C. CANAL ON E'LY SIDE OF FILLMORE ST. FB 739/55

W.O. | FOR: | F.B.

TRACT NO. 19411-1,2,3
COUNTY OF RIVERSIDE
STORM DRAIN IMPROVEMENT PLAN
TITLE SHEET

D-597 | 1 | OF 23 SHEETS | FILE NO.

INDEXED 7/9/91 GH

PLOT TITLE SHT-STRM DRAIN-PHASE I - 1640.24JPF1 629 2330 26-Jun-87 02:51 PM / 693.0-1

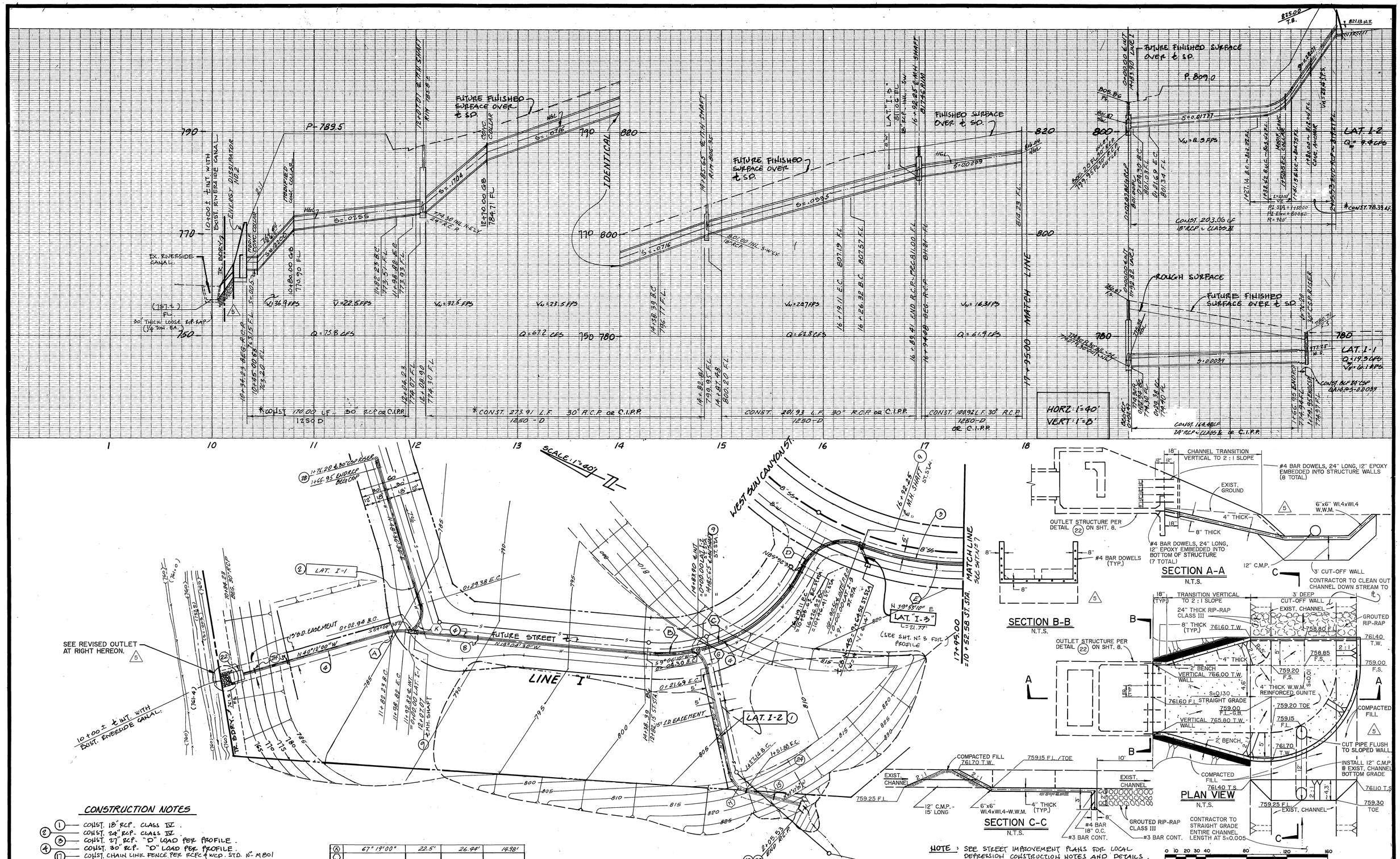

CONSTRUCTION NOTES

1. CONST. 18" RCP. CLASS IV.
2. CONST. 24" RCP. CLASS IV.
3. CONST. 27" RCP. "D" LOAD PER PROFILE.
4. CONST. 30" RCP. "D" LOAD PER PROFILE.
17. CONST. CHAIN LINK FENCE PER RCFC & WCD. STD. No. M801
9. CONST. MANHOLE No. 1 PER RCFC & WCD. STD. No. MH251.
15. CONST. PIPE ANCHOR PER DETAIL ON SHT. No. 8
22. CONST. ENERGY DISSIPATOR PER DETAIL ON SHT. No. 8
24. CONST. MODIFIED CONC. COLLAR TO PIPE ANCHOR PER DETAIL SHT. No. 8
27. CONST. INLET STRUCTURE PER DETAIL ON SHT. No. 9
28. CONST. 30" CSP. RISER PER DETAIL ON SHT. No. 9.
8. CONST. CONC. COLLAR PER RCFC & WCD. STD. NO. M803

ID.	Δ	R	L	T
(A)	67° 19' 00"	22.5'	26.44'	14.98'
(H)	63° 00' 10"	22.5'	24.74'	13.79'
(G)	44° 16' 40"	22.5'	17.39'	9.15'
(F)	19° 37' 10"	30.5'	104.44'	52.74'
(D)	81° 47' 12"	45'	64.24'	39.97'
(C)	49° 58' 48"	155'	135.21'	72.24'
(B)	16° 49' 18"	155'	45.51'	22.92'
(A)	21° 07' 30"	45'	16.59'	8.39'

CURVE DATA

NOTE: SEE STREET IMPROVEMENT PLANS FOR LOCAL DEPRESSION CONSTRUCTION NOTES AND DETAILS.

* AS-BUILT PER PLANS 1-27-92 LH

REVISIONS:
ALTERNATIVE USE OF C.I.P.P. TO R.C.P. WHERE SHOWN - 5/10/89
5 ADDED REVISED OUTFALL DETAIL FOR LINE "I". R. McGrath 6/13/91
6/14/91 Deputy Fund Director City of Riverside

APPROVED BY: DATE: 12-16-88
REGISTERED CIVIL ENGINEER NO. 28946
REGISTRATION EXPIRES 3-31-91

APPROVED BY: DATE: 2/27/89
RIVERSIDE COUNTY, CALIF. FOR ROAD COMMISSIONER

Church Engineering, Inc.
Consulting Engineers
Planners
Surveyors
2501 Alton Avenue, Irvine
California 92714
Telephone (714) 660-8600

SCALE: AS SHOWN
DATE
BENCH MARK: SEE TITLE SHEET

TRACT NO. 19411-3
COUNTY OF RIVERSIDE
STORM DRAIN IMPROVEMENT PLAN
LINE I
STA. 10+00.00 TO STA. 17+95.00

W.O. | FOR: | F.B.

D-597
82
OF 93 SHEETS
FILE NO.

INDEXED 7/9/91 LH

5258-693

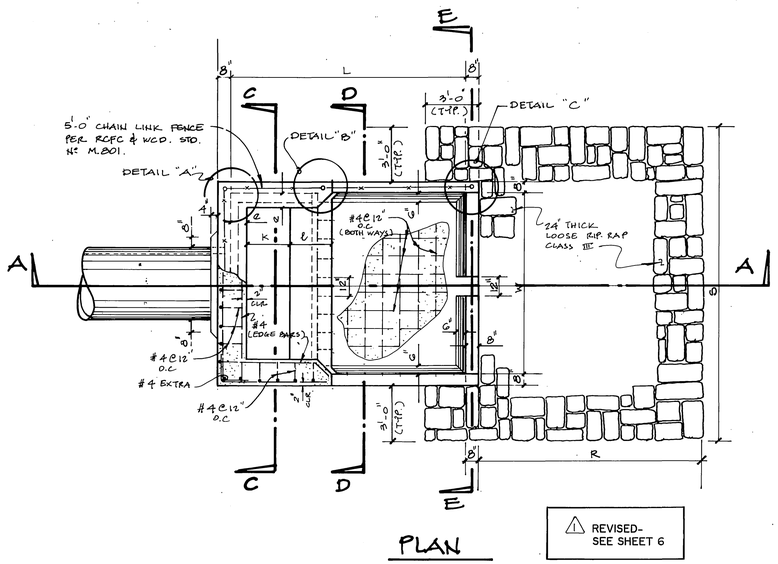

PLAN

⚠ REVISED- SEE SHEET 6

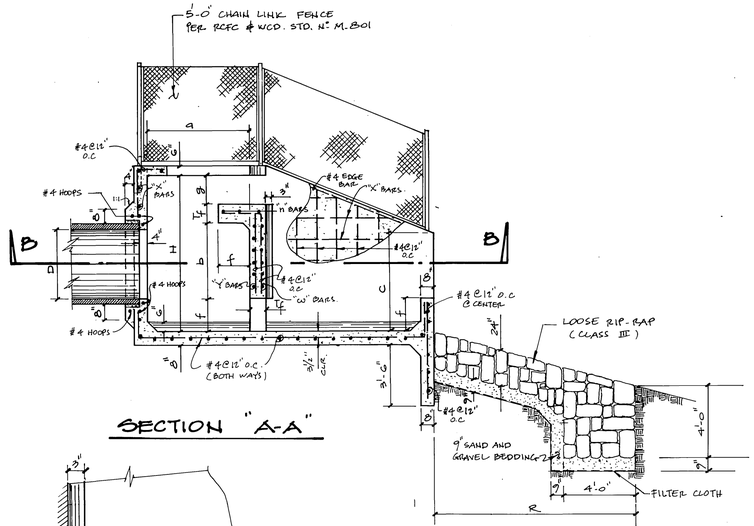

SECTION "A-A"

⚠ REVISED- SEE SHEET 6

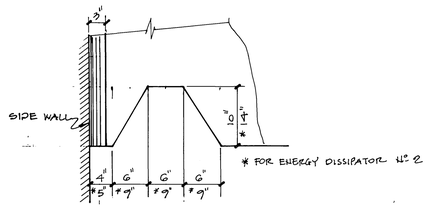

DETAIL "D"

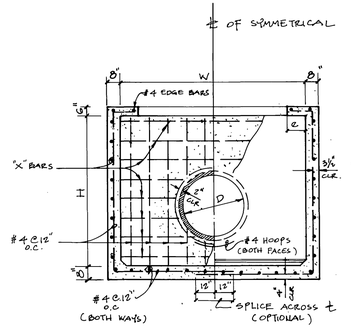

SECTION "C-C"

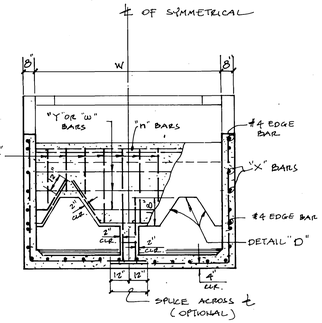

SECTION "D-D"

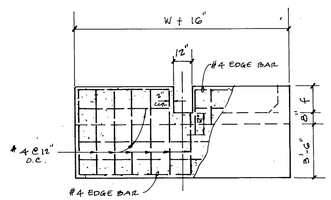

SECTION "E-E"

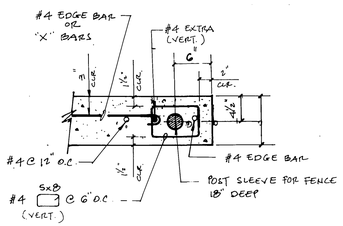

DETAIL "C"

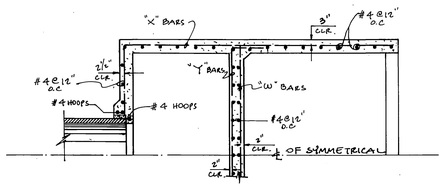

SECTION "B-B"

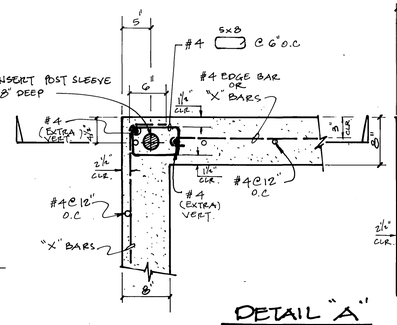

DETAIL "A"

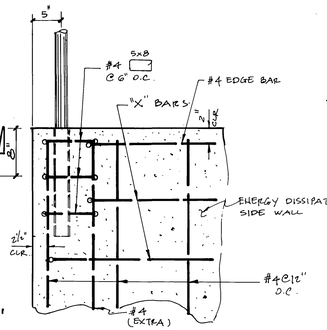

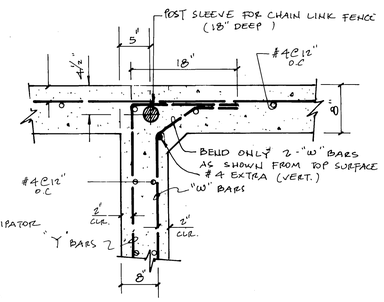

DETAIL "B"

(22) ENERGY DISSIPATOR DETAILS

NO SCALE

REF: "DESIGN OF SMALL CANAL STRUCTURES" OF BUREAU OF RECLAMATION OF UNITED STATES - DEPARTMENT OF THE INTERIOR

ENERGY DISSIPATOR ELEMENTS DATA

ENERGY DISSIPATOR	DIMENSIONS															REINFORCEMENT			
	Q	D	W	L	H	a	b	C	e	f	g	K	ℓ	Tf	R	S	"X" BARS	"Y" BARS	"w" BARS	"n" BARS
Nº 1	45.0	24"	6'-9"	9'-0"	5'-3"	3'-5"	2'-6"	3'-5"	0'-6"	1'-2"	1'-1"	2'-5"	1'-8"	0'-8"	10'-0"	14'-1"	#4@12"	#4@10"	—	2-#4
Nº 2	62.1	30"	7'-5"	12'-4"	7'-0"	4'-7"	3'-6"	4'-8"	0'-9"	1'-7"	1'-3"	3'-1"	2'-5"	0'-8"	10'-0"	16'-7"	#4@10"	#4@6"	#4@6"	3-#4

NOTE: - "n" BARS BOND INTO SIDE WALLS 12" MIN.
- FOR ALL EXTRA VERTICAL BARS, BOND INTO BOTTOM SLAB OF STRUCTURE 12" MIN.

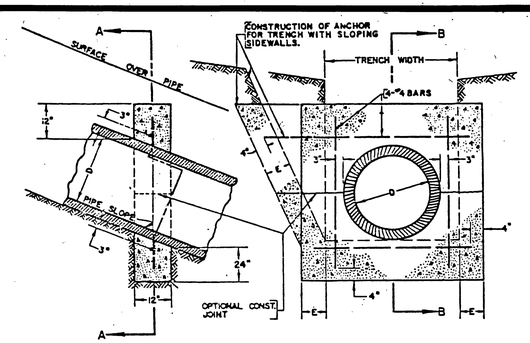

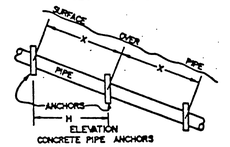

PIPE SLOPE	X DISTANCE	H HORIZ. DIST.
1:1	12'	8.5'
1½:1	14'	11.7'
2:1	16	14.4'
2½:1	18'	16.7'
3:1	20'	19.0'

NOTES:
1- PIPE ANCHORS REQUIRED ON ALL SLOPES OF 3:1 OR STEEPER.
2- ALL REINFORCING STEEL SHALL BE NUMBER 4 BARS.
3- "E" SHALL BE 8 INCHES UNLESS OTHERWISE SPECIFIED.
4- CONCRETE SHALL BE CLASS "B" OR BETTER.
5- NOT TO BE USED ON CONNECTOR PIPES.

(15) CONCRETE PIPE ANCHOR

NO SCALE

STRUCTURAL NOTES

1. ALL CONCRETE SHALL BE PORTLAND CEMENT CONCRETE WITH AN ULTIMATE 28 DAYS COMPRESSIVE STRENGTH OF 4,000 PSI CEMENT SHALL CONFORM TO ASTM C150, TYPE II.
2. CONCRETE DIMENSIONS SHALL BE MEASURED HORIZONALLY OR VERTICALLY ON THE PROFILE, AND PARALLED TO OR AT RIGHT ANGLES (OR RADIALLY) TO CENTERLINE OF THE CONDUIT ON THE PLAN EXCEPT AS OTHERWISE SHOWN.
3. NO CONCRETE SHALL BE PLACED UNTIL THE FORMS AND THE REINFORCING STEEL HAS BEEN PLACED, INSPECTED AND APPROVED.
4. EXPOSED EDGES OF CONCRETE MEMBERS SHALL BE CHAMBERED 3/4".
5. DIMENSIONS FROM FACE OF CONCRETE TO STEEL ARE TO FACE OF BAR AND SHALL BE 2 INCHES UNLESS OTHERWISE SHOWN.
6. ALL REINFORCING BARS SHALL CONFORM TO ASTM A615, GRADE 60, DEFORMED BARS.
7. ALL BARS BENDS AND HOOKS SHALL CONFORM TO THE AMERICAN CONCRETE INSTITUTE'S "BUILDING CODE REQUIREMENTS FOR REINFORCED CONCRETE" CHAPTER 7 (ACI 318-77).
8. LONGITUDINAL STEEL SHALL BE LAPPED 40 BAR DIAMETERS AT SPLICES. TRANSVERSE STEEL SHALL BE LAPPED AS SHOWN ON DRAWINGS.
9. PLACING OF REINFORCEMENT SHALL CONFORMED TO THE AMERICAN CONCRETE INSTITUE'S "BUILDING CODE REQUIREMENTS FOR REINFORCED CONCRETE" CHAPTER 7 (ACI 318-77).
10. HEAVY COMPACTION EQUIPMENT SHALL NOT BE USED FOR BACKFILLING THE STRUCTURES IN ORDER TO PREVENT DAMAGE TO THE STRUCTURE. THE CONTRACTOR SHALL BE RESPONSIBLE FOR ANY DAMAGE TO THE STRUCTURES RESULTING FROM INAPPROPIATE COMPACTING TECHNIQUES AND EQUIPMENT.
11. THE BACKFILL SHALL BE BROUGHT UP UNIFORMLY ON ALL SIDES OF THE STRUCTURE.

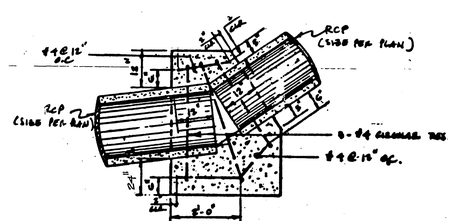

(24) REINFORCED CONC. COLLAR MODIFIED AS PIPE ANCHOR

NO SCALE

NOTE: SEE RIVC & WCD STD Nº M803 FOR ALL OTHER NOTES WHICH ARE NOT SHOWN.

* AS-BUILT PER PLANS 1-27-92 GH

REVISIONS:
⚠ REVISED OUTFALL DETAIL FOR LINE "I" ON SHEET 6. J. McKenzie 6/13/91
6/14/91 Deputy, PWD Director, City of Riverside

APPROVED BY: [signature] REGISTERED CIVIL ENGINEER NO. 28946 REGISTRATION EXPIRES 3-31-91
DATE 12-16-88

APPROVED BY: [signature] RIVERSIDE COUNTY, CALIF. FLOOD CONTROL
DATE 2/27/89

Church Engineering, Inc.
Consulting Engineers, Planners, Surveyors
2301 Alton Avenue, Irvine, California 92714
Telephone (714) 660-8000

SCALE
DATE
BENCH MARK: SEE TITLE SHEET

TRACT NO. 19411-1,2,3
COUNTY OF RIVERSIDE
STORM DRAIN IMPROVEMENT PLAN
DETAIL SHEET

W.O. FOR F.B.

D-597
83 OF 83 SHEETS
FILE NO

INDEXED 7/9/91 GH

5/88 1.693