QUANTITY ESTIMATE S.D., PHASE I (THIS CONTRACT)

ITEM	QUANTITY
120" STORM DRAIN PIPE	250 L.F.
69" R.C.P.	13.9 L.F.
48" R.C.P.	17.25 L.F.
36" R.C.P.	935 L.F.
30" R.C.P.	90 L.F.
24" R.C.P.	205 L.F.
18" R.C.P.	85 L.F.
RIP-RAP (1/2 TON)	1,150 TON
MANHOLE # 4 (R.C.F.C. MH 254)	1 Ea.
CATCH BASIN 11' (405)	3 Ea.
CATCH BASIN 14' (405)	4 Ea.
J.S. "C" (422)	1 Ea.
J.S. "B" (421)	1 Ea.
CONCRETE COLLAR	4 Ea.
INLET TYPE IV (R.C.F.C. CB 107)	1 Ea.
DRAINAGE DITCH (6' BOTTOM)	15,700 cu. yds
CUT-OFF WALL	1 Ea.
36" C.M.P.	67 L.F.
24" C.M.P.	54 L.F.
TIMBER BULKHEAD (456) (6')	1 Ea.
SECURITY GATES (DETAIL SHT. NO. 2	2 Ea.

QUANTITY ESTIMATE S.D., PHASE II (FUTURE CONSTRUCTION)

ITEM	QUANTITY
120" STORM DRAIN PIPE	318.56 L.F.
108" STORM DRAIN PIPE	1581.44 L.F.
96" STORM DRAIN PIPE	936.48 L.F.
30" R.C.P.	80 L.F.
18" R.C.P.	65 L.F.
CATCH BASIN 7' (405)	1 Ea.
CATCH BASIN 11' (405)	3 Ea.
CATCH BASIN 14' (405)	1 Ea.
CUT OFF WALL	1 Ea.
J.S. #2 R.C.F.C. JS 222	1 Ea.
J.S. #4 R/C 423	2 Ea.
J.S. #4 R.C.F.C. JS 224	1 Ea.
MANHOLE # 2 (R.C.F.C. MH. 252)	3 Ea.
MANHOLE # 4 (R.C.F.C. MH 254)	2 Ea.
CONCRETE COLLAR	1 Ea.
WINGED HEADWALL (CAL-TRANS D86B)	1 Ea.
TRASH RACK (SEE DETAIL SHT. 8)	1 Ea.
TIMBER BULKHEAD (456) (34")	1 Ea.
REMOVE TEMP CMP	103 L.F.

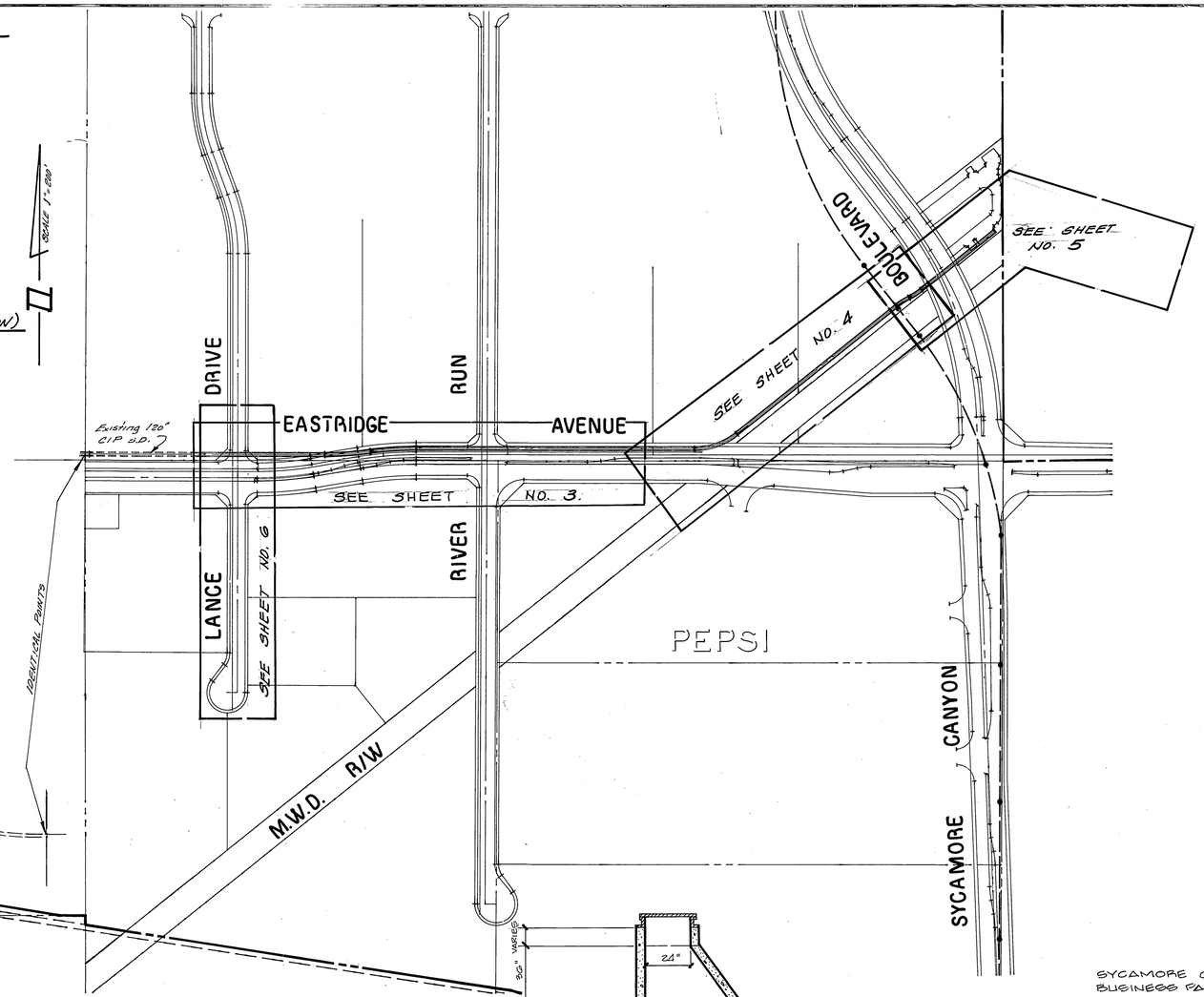

LOCATION MAP
SCALE 1"=200'

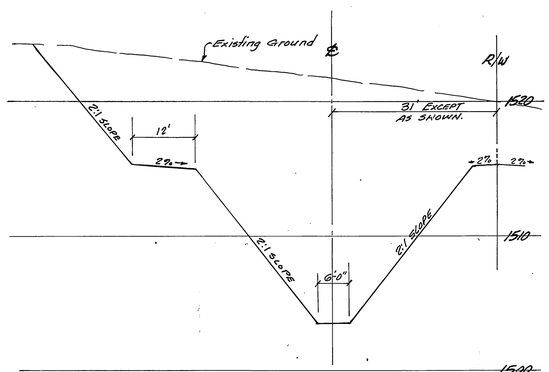

CROSS SECTION
TEMP. DITCH
SEE SHEET 2 & 3
N.T.S.

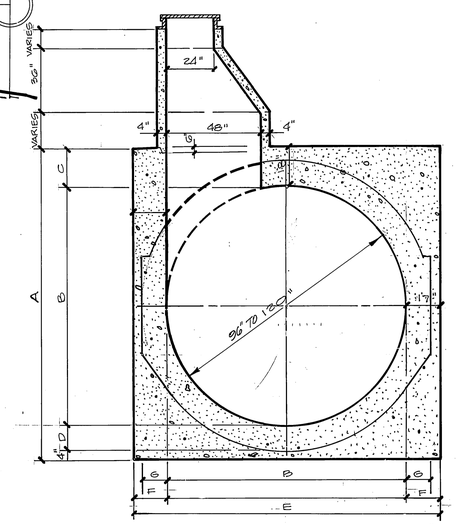

ALTERNATE STORMDRAIN MANHOLE CONSTRUCTION DATA.

DIA.	A	B	C	D	E	F	MIN G
54"	75"	54"	11 1/2"	5 1/2"	75"	10 1/2"	5 1/2"
60"	82"	60"	12"	6"	82"	11"	6"
66"	89"	66"	12 1/2"	6 1/2"	89"	11 1/2"	6 1/2"
72"	96"	72"	13"	7"	96"	12"	7"
84"	110"	84"	14"	8"	110"	13"	8"
96"	124"	96"	15"	9"	124"	14"	9"
108"	139"	108"	16 1/2"	10 1/2"	139"	15 1/2"	10 1/2"
120"	154"	120"	18	12"	154"	17"	12"

ALTERNATE S.D. MANHOLE
N.T.S.

STORM DRAIN GENERAL NOTES:

1. IT SHALL BE THE RESPONSIBILITY OF THE CONTRACTOR TO CLEAR THE RIGHT OF WAY IN ACCORDANCE WITH THE PROVISIONS OF LAW AS IT AFFECTS EACH UTILITY INCLUDING IRRIGATION LINES AND APPURTENANCES AND AT NO COST TO THE CITY.
2. CONSTRUCTION SHALL BE IN ACCORDANCE WITH THE CITY OF RIVERSIDE DEPARTMENT OF PUBLIC WORKS, STANDARD DRAWINGS, AND THE STANDARD SPECIFICATIONS FOR PUBLIC WORKS CONSTRUCTION, CURRENT EDITION.
3. THE PRIVATE ENGINEER SIGNING THESE PLANS IS RESPONSIBLE FOR ASSURING THE ACCURACY AND ACCEPTABILITY OF THE WORK HEREON IN THE EVENT OF DISCREPANCIES ARISING DURING CONSTRUCTION, THE PRIVATE ENGINEER SHALL BE RESPONSIBLE FOR DETERMINING AN ACCEPTABLE SOLUTION AND REVISING THE PLANS FOR APPROVAL BY THE CITY.
4. THE DEVELOPER SHALL BE RESPONSIBLE FOR PRESERVING OR REESTABLISHING AND REFERENCING SURVEY MONUMENTS DESTROYED, DISTURBED OR BURIED AS A RESULT OF CONSTRUCTION SHOWN HEREON.
5. ALL FLAGGED ELEVATIONS SHALL BE STAKED IN THE FIELD BY THE PRIVATE ENGINEER.
6. THE CONTRACTOR SHALL CALL IN A LOCATION REQUEST TO UNDERGROUND SERVICE ALERT (USA), PHONE NO. 1-800-422-4133, TWO WORKING DAYS BEFORE DIGGING. NO CONSTRUCTION PERMIT WILL BE ISSUED BY THE PUBLIC WORKS DEPARTMENT INVOLVING EXCAVATION FOR UNDERGROUND FACILITIES UNLESS THE APPLICANT HAS BEEN PROVIDED AN INQUIRY IDENTIFICATION NUMBER BY U.S.A.
7. ON ALL AREAS WITHIN PUBLIC RIGHT OF WAY WHERE THE FILL IS ONE (1) FOOT OR GREATER, A LETTER WILL BE REQUIRED FROM THE SOILS ENGINEER, CERTIFYING THE COMPACTION OF THE FILL BELOW SUBGRADE, PRIOR TO ISSUANCE OF THE CONSTRUCTION PERMIT/CUT SHEETS.
8. BEFORE THE RIP RAP IS ACCEPTED, AS PLACED, AT THE OUTLET OF ANY DRAINAGE STRUCTURE, IT SHALL BE TESTED UNDER FLOWS AS CLOSE AS POSSIBLE TO DESIGN CONDITIONS WITH WATER OBTAINED FROM FIRE HYDRANTS IN THE IMMEDIATE AREA.
9. ANY TRAFFIC CONTROL STRIPING OBLITERATED AND/OR BADLY WORN DURING CONSTRUCTION SHALL BE RESTORED BY THE CONTRACTOR WITHIN FIVE DAYS AFTER NOTIFICATION FROM THE CITY INSPECTORS.

NOTICE TO CONTRACTOR

1. THE EXISTENCE, HORIZONTAL AND VERTICAL LOCATIONS OF ANY UNDERGROUND UTILITY PIPES OR STRUCTURES SHOWN ON THESE PLANS ARE OBTAINED BY A SEARCH OF THE AVAILABLE RECORDS. TO THE BEST OF OUR KNOWLEDGE, THERE ARE NO EXISTING UTILITIES EXCEPT THOSE SHOWN ON THESE PLANS.
2. THE CONTRACTOR IS REQUIRED TO TAKE DUE PRECAUTIONARY MEASURES TO PROTECT THE UTILITY LINES SHOWN AND ANY OTHER LINES NOT OF RECORD OR NOT SHOWN ON THESE PLANS. LOCATIONS OF UTILITIES SHALL BE VERIFIED BY THE CONTRACTOR PRIOR TO COMMENCEMENT OF CONSTRUCTION.

NOTE:
WHERE CAST-IN-PLACE CONSTRUCTION IS TO BE USED, CONCRETE SHALL HAVE A MINIMUM COMPRESSIVE STRENGTH (f'c) AT 7 DAYS OF 3600 PSI. THE MODULUS OF RUPTURE SHALL BE AT LEAST 600 PSI.

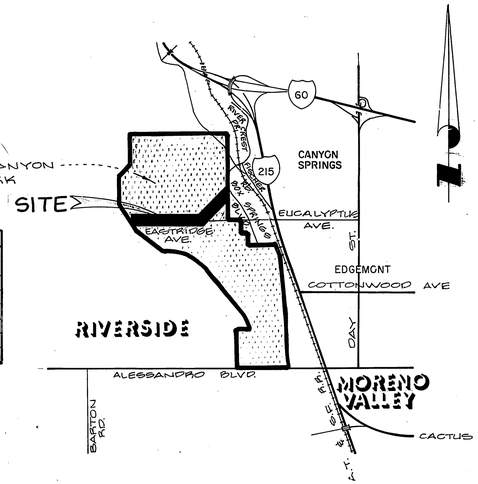

VICINITY MAP
N.T.S.

*AS-BUILT 6 APRIL 1994 "THIS CONTRACT IS FOR SHEETS 1, 2, 3, 6 AND 7, ONLY. OTHER SHEETS NOT INCLUDED

BENCH MARK

U.S.C.& G.S. DESIGNATION Z 749, RIVERSIDE COUNTY DESIGNATION 600-47-68, STANDARD BRASS DISK STAMPED Z 749 1945 ESTABLISHED BY C.& G.S. 1.7 MILES NORTHWEST ALONG THE ATCHISON, TOPEKA AND SANTA FE RAILWAY FROM THE STATION AT MARCH FIELD, SET BETWEEN THE TRACK AND U.S. HIGHWAY NO. 395 (I 215) 64.5 FEET SOUTHWEST OF THE SOUTHWEST EDGE OF THE HIGHWAY, 43.6 FEET NORTHEAST OF THE NORTHEAST RAIL OF TRACK, 20 FEET SOUTHEAST OF POST, IRON BENCH MARK DISK SET IN TOP OF A CONCRETE-POST 0.4 FEET ABOVE GROUND.

DATE 1970 ELEVATION: 1536.119

REVIEWED BY
WESTERN MUNICIPAL WATER DISTRICT
SHEETS 1 THRU 8 OF 8
Stan W. Appel
ASSOCIATE ENGINEER
R.C.E. 48109
DATE: 4-29-93

REGISTERED PROFESSIONAL ENGINEER MATTHEW E. WEBB NO. 37385 EXP. 6-30-94 CIVIL STATE OF CALIFORNIA

BUSINESS TAX CERTIFICATE NO. 5751 EXPIRATION DATE: 12-31-93

ALBERT A. WEBB ASSOCIATES
CIVIL ENGINEERS
RIVERSIDE, CALIFORNIA
3788 McCRAY STREET 686-1070
APPROVED BY Matthew E. Webb DATE 4/26/93
R.E. No. 37385

W.O.90-3000 FOR: CITY OF RIVERSIDE F.B. 1034

MARK	REVISIONS	APPR.	DATE

DESIGNED BY JVP, DRAWN BY JVP, CHECKED BY

CITY OF RIVERSIDE, CALIFORNIA
PUBLIC WORKS DEPARTMENT

APPROVED BY	BY	DATE
PRINCIPAL ENGINEER		6/10/93
PARK DEPARTMENT	—	—
TRAFFIC DIVISION	—	—
CHIEF PUB.WKS.ENGR.		9/10/93

APPROVED BY
DIRECTOR OF PUBLIC WORKS
DATE 5-13-93

STORM DRAIN PLANS
SYCAMORE CANYON BUSINESS PARK
ASSESSMENT DISTRICT NUMBER 1
COVER SHEET

SCALE: AS SHOWN

ACCOUNT No. 90-3000
DRAWING NUMBER
D-623
SHEET 1 OF 8
90-3000-D

INDEXED 7-7-94

NOTE:
CONTRACTOR SHALL BEVEL ENDS OF EXISTING PIPE @ 45° AND PLACE DOWELS W/EPOXY FOR C.I.P. PIPE EXTENSION.

#5 DOWELS 20" LONG @ 18" O.C.

C.I.P.P. CONNECTION
N.T.S.

CONSTRUCK 132.43 L.F. 120" STORM DRAIN PIPE
A.I.T. 120" R.C.P. (D-LOAD - 2400) BEDDING CASE II

APPROX LOCATION EXIST. SLOPE

Q = 1059 CFS
V = 13.5 F.P.S.

NOTE:
IF C.I.P. PIPE IS USED, CONCRETE CONNECTION SHALL BE PER DETAIL LEFT HEREON.

H.G.L.

N.S.L.

PIPE TO BE MITERED @ END

Proposed 120" S.D. Pipe

EXISTING 120" C.I.P.

SECURITY GATE

EXISTING GRADE

1/2 TON CONCRETED ROCK SEE SECTION

GRADE TO DRAIN @ 0.1%

1/2 TON RIP-RAP D=4.3'

S=0.0040

S=0.0040

OUT-OFF WALL

Q_{100} = 1094 CFS
V_{100} = 13.9 F.P.S.

VERT.: 1"=4'

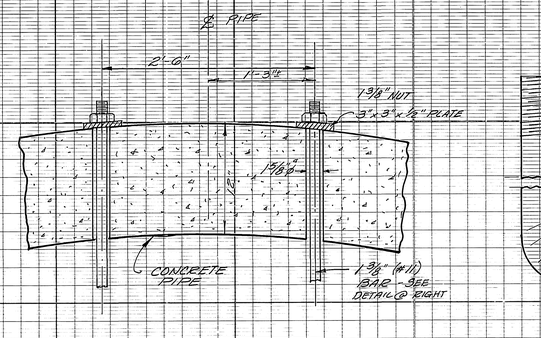

DETAIL THROUGH PIPE
N.T.S.

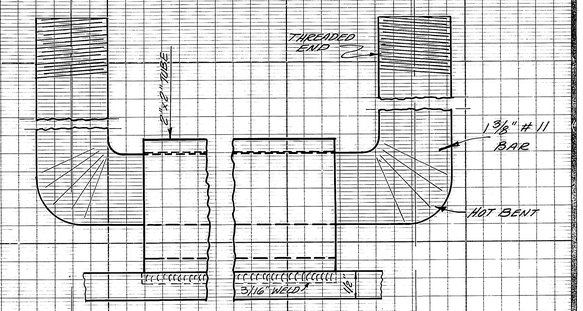

DETAIL U-BAR
N.T.S.

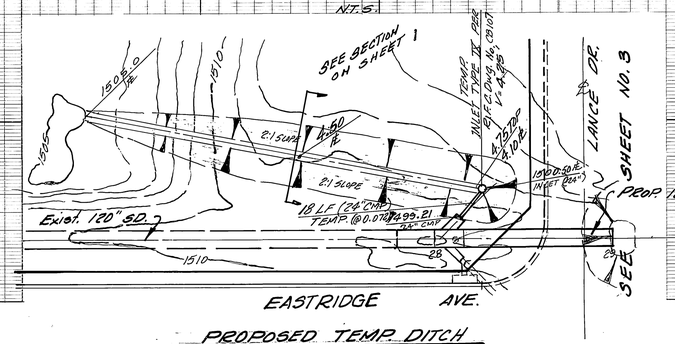

PROPOSED TEMP. DITCH
1"=40'

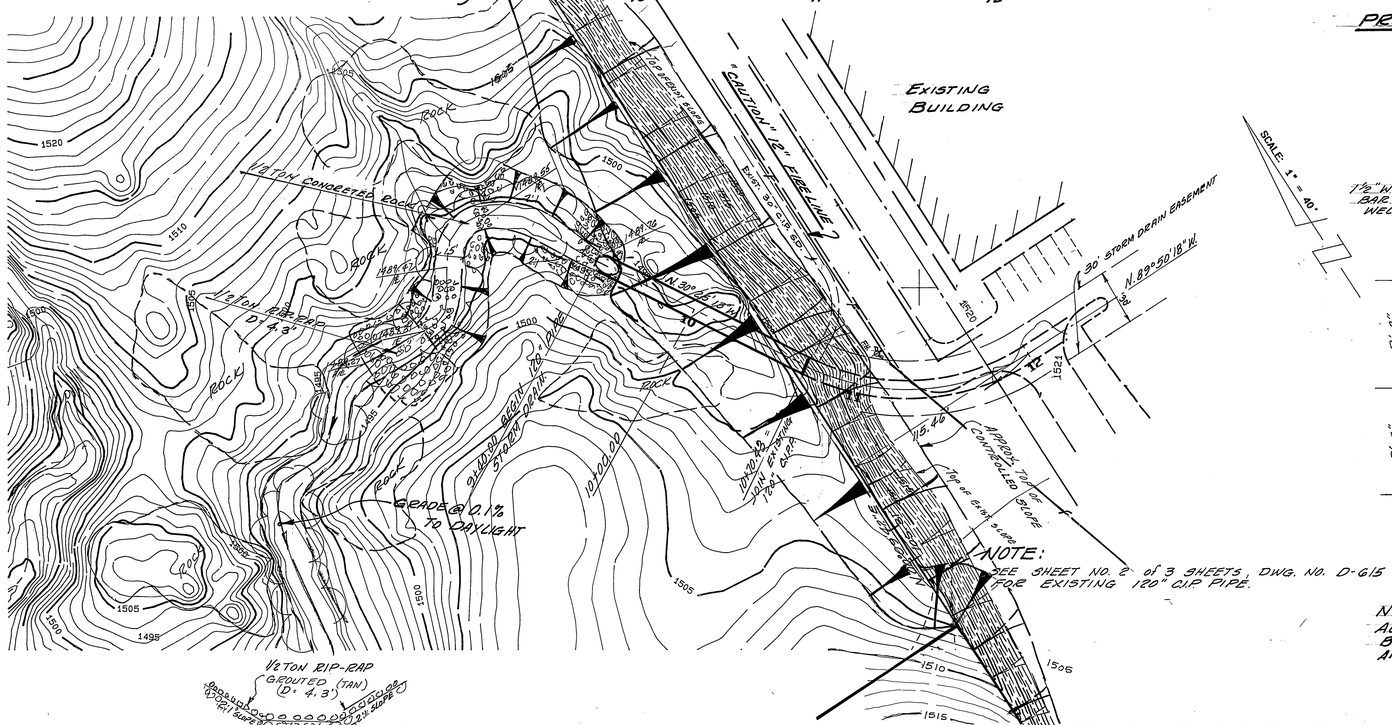

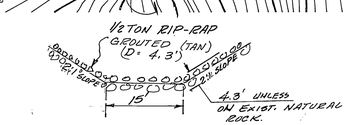

CONCRETED ROCK SECTION
N.T.S.

SCALE: 1" = 40'

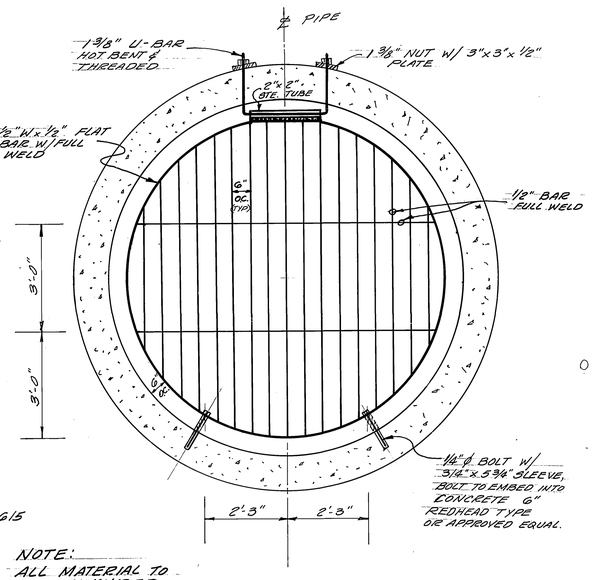

NOTE:
ALL MATERIAL TO BE GALVANIZED AFTER FABRICATION

SECURITY GATE DETAIL
10' DIA. PIPE.
N.T.S.

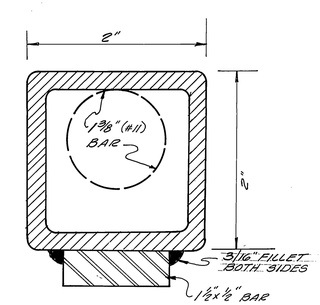

2"x2" STEEL TUBING
N.T.S.

*AS-BUILT 6 APRIL 1994

BUSINESS TAX CERTIFICATE NO. 5751 EXPIRATION DATE: 12-31-93

REGISTERED PROFESSIONAL ENGINEER MATTHEW E. WEBB NO. 37385 EXP. 6-30-96 CIVIL STATE OF CALIFORNIA

UNDERGROUND SERVICE ALERT
CALL: TOLL FREE 1-800 422-4133
TWO WORKING DAYS BEFORE YOU DIG

ALBERT A. WEBB ASSOCIATES
CIVIL ENGINEERS
RIVERSIDE, CALIFORNIA
APPROVED BY Matthew E. Webb DATE 4/6/93
R.E. No. 37385

W.O. 90-3000 FOR: CITY OF RIVERSIDE F.B. 1034

MARK	REVISIONS	APPR.	DATE

DESIGNED BY: JVP DRAWN BY: JVP CHECKED BY: SPH

CITY OF RIVERSIDE, CALIFORNIA
PUBLIC WORKS DEPARTMENT

APPROVED BY	BY	DATE
PRINCIPAL ENGINEER		4/14/93
PARK DEPARTMENT	—	—
TRAFFIC DIVISION	—	—
CHIEF FUB.WKS.ENGR.		5/14/93

APPROVED BY
DIRECTOR OF PUBLIC WORKS
DATE 5/13/93

STORM DRAIN PLANS
SYCAMORE CANYON BUSINESS PARK
ASSESSMENT DISTRICT NUMBER 1
OUTLET EXTENSION
AND SECURITY GATE

SCALE: HORIZ: 1"=40', VERT: 1"=4'

ACCOUNT No. 90-3000
DRAWING NUMBER D-623
SHEET 2 OF 8
90-3000-D

INDEXED 7-7-94 GH

RIVERSIDE BLUEPRINT - RIVERSIDE, CALIF.

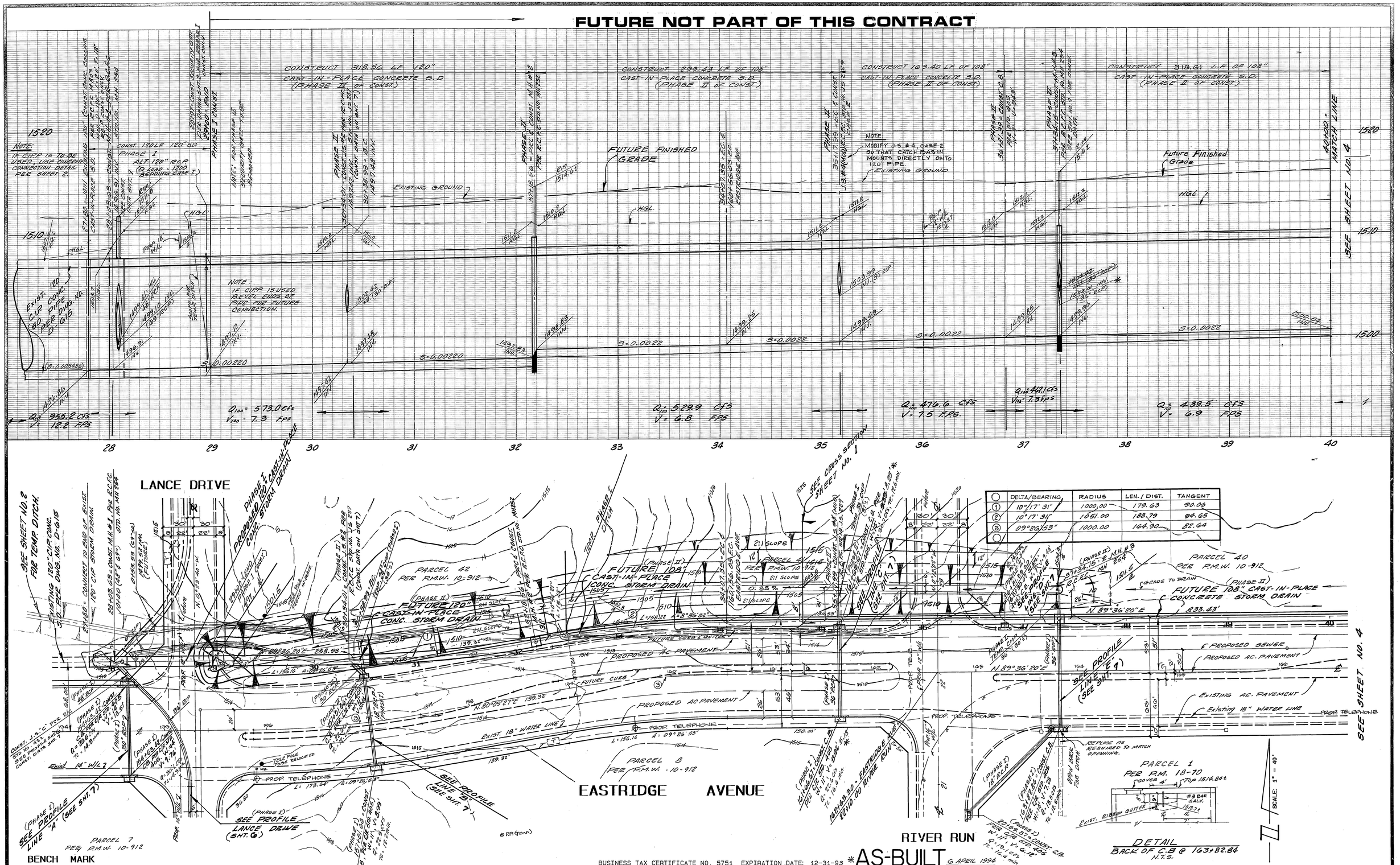

	DELTA/BEARING	RADIUS	LEN./DIST.	TANGENT
1	10°17'31"	1000.00	179.63	90.06
2	10°17'31"	1051.00	188.79	94.65
3	09°26'53"	1000.00	164.90	82.64

U.S.C.&G.S. DESIGNATION Z 749, RIVERSIDE COUNTY DESIGNATION 600-47-6B, STANDARD BRASS DISK STAMPED Z 749 1945 ESTABLISHED BY C.&G.S. 1.7 MILES NORTHWEST ALONG THE ATCHISON, TOPEKA AND SANTA FE RAILWAY FROM THE STATION AT MARCH FIELD, SET BETWEEN THE TRACK AND U.S. HIGHWAY NO. 395 (I 215) 64.5 FEET SOUTHWEST OF THE SOUTHWEST EDGE OF THE HIGHWAY, 43.6 FEET NORTHEAST OF THE NORTHEAST RAIL OF TRACK, 20 FEET SOUTHEAST OF POST, IRON BENCH MARK DISK SET IN TOP OF A CONCRETE POST 0.4 FEET ABOVE GROUND.

DATE 1970 ELEVATION: 1536.119

REGISTERED PROFESSIONAL ENGINEER MATTHEW E. WEBB NO. 37385 EXP. 6-30-96 CIVIL STATE OF CALIFORNIA

UNDERGROUND SERVICE ALERT
CALL: TOLL FREE 1-800 422-4133
TWO WORKING DAYS BEFORE YOU DIG

BUSINESS TAX CERTIFICATE NO. 5751 EXPIRATION DATE: 12-31-93 *AS-BUILT 6 APRIL 1994

ALBERT A. WEBB ASSOCIATES
CIVIL ENGINEERS
RIVERSIDE, CALIFORNIA
3788 MCCRAY STREET 686-1070
APPROVED BY Matthew E. Webb DATE 4/26/93
R.E. No. 37385

W.O. 90-3000 FOR: CITY OF RIVERSIDE F.B. 1034

MARK	REVISIONS	APPR.	DATE

DESIGNED BY JVP, DRAWN BY JVP, CHECKED BY SDH

CITY OF RIVERSIDE, CALIFORNIA
PUBLIC WORKS DEPARTMENT

APPROVED BY	BY	DATE
PRINCIPAL ENGINEER		5/26/93
PARK DEPARTMENT		
TRAFFIC DIVISION		
CHIEF PUB.WKS.ENGR.		5/26/93

APPROVED BY DIRECTOR OF PUBLIC WORKS
DATE 6-13-93

STORM DRAIN PLANS
SYCAMORE CANYON BUSINESS PARK
ASSESSMENT DISTRICT NUMBER 1
EASTRIDGE AVENUE
STA. 27+80.00 TO STA. 40+00.00

SCALE: HORIZ. 1"=40', VERT. 1"=4'

ACCOUNT No. 90-3000
DRAWING NUMBER D-623
SHEET 3 OF 8
90-3000-D

INDEXED 7-7-94 GH

MISSING SHEET

MISSING SHEET

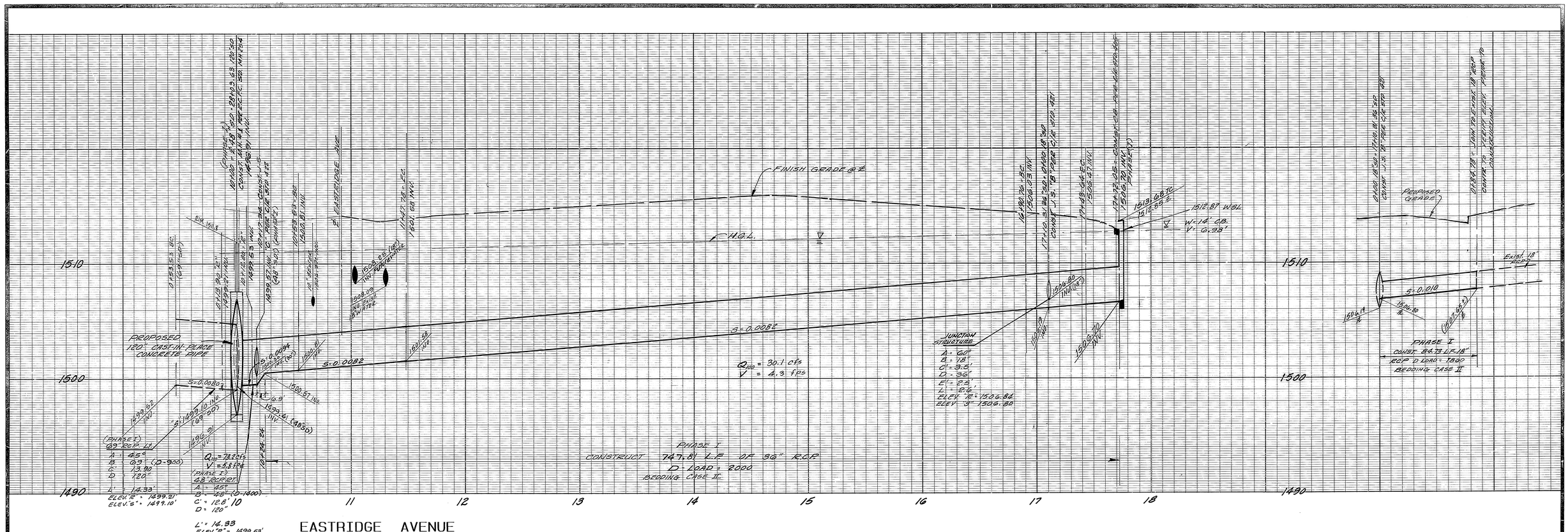

EASTRIDGE AVENUE

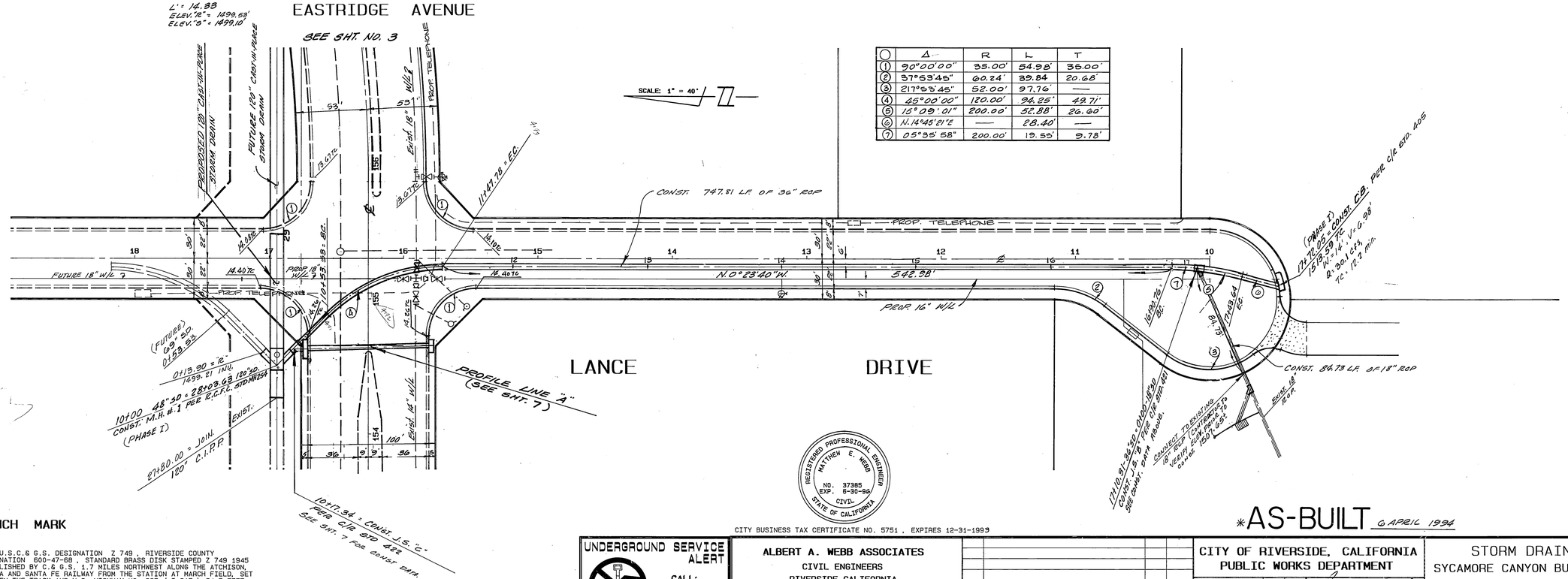

	Δ	R	L	T
1	90°00'00"	35.00'	54.98'	35.00'
2	37°53'45"	60.24'	39.84	20.68'
3	217°53'45"	52.00'	197.76'	—
4	45°00'00"	120.00'	94.25'	49.71'
5	15°09'01"	200.00'	52.88'	26.60'
6	N.14°45'21"E	—	28.40'	—
7	05°35'58"	200.00'	19.55'	9.78'

BENCH MARK

U.S.C.& G.S. DESIGNATION Z 749 , RIVERSIDE COUNTY DESIGNATION 600-47-68 , STANDARD BRASS DISK STAMPED Z 749 1945 ESTABLISHED BY C.& G.S. 1.7 MILES NORTHWEST ALONG THE ATCHISON, TOPEKA AND SANTA FE RAILWAY FROM THE STATION AT MARCH FIELD, SET BETWEEN THE TRACK AND U.S. HIGHWAY NO. 395 (I 215) 64.5 FEET SOUTHWEST OF THE SOUTHWEST EDGE OF THE HIGHWAY, 43.6 FEET NORTHEAST OF THE NORTHEAST RAIL OF TRACK, 20 FEET SOUTHEAST OF POST, IRON BENCH MARK DISK SET IN TOP OF A CONCRETE POST 0.4 FEET ABOVE GROUND.

DATE 1970 ELEVATION: 1536.119

REGISTERED PROFESSIONAL ENGINEER MATTHEW E. WEBB NO. 37385 EXP. 6-30-94 CIVIL STATE OF CALIFORNIA

CITY BUSINESS TAX CERTIFICATE NO. 5751 , EXPIRES 12-31-1993

*AS-BUILT 6 APRIL 1994

UNDERGROUND SERVICE ALERT
CALL: TOLL FREE 1-800 422-4133
TWO WORKING DAYS BEFORE YOU DIG

ALBERT A. WEBB ASSOCIATES
CIVIL ENGINEERS
RIVERSIDE, CALIFORNIA
3788 McCRAY STREET 686-1070
APPROVED BY Matthew E. Webb DATE 6/6/93
R.E. No. 37385

W.O. 90-3000 FOR: CITY OF RIVERSIDE F.B. 1034

MARK	REVISIONS	APPR.	DATE

DESIGNED BY JVP. DRAWN BY JVP. CHECKED BY [illegible]

CITY OF RIVERSIDE, CALIFORNIA
PUBLIC WORKS DEPARTMENT

APPROVED BY	BY	DATE
PRINCIPAL ENGINEER	[illegible]	5/16/93
PARK DEPARTMENT	—	—
TRAFFIC DIVISION	—	—
CHIEF PUB.WKS.ENGR.	[illegible]	5/17/93

APPROVED BY [signature]
DIRECTOR OF PUBLIC WORKS
DATE 5/13/93

STORM DRAIN PLANS
SYCAMORE CANYON BUSINESS PARK
ASSESSMENT DISTRICT NUMBER 1
LANCE DRIVE

ACCOUNT No.
DRAWING NUMBER D-623
SHEET 6 OF 8
SCALE: HORIZ. 1"=40' . VERT. 1"=4'
90-3000

INDEXED 7-7-94

RIVERSIDE BLUEPRINT - RIVERSIDE, CALIF.

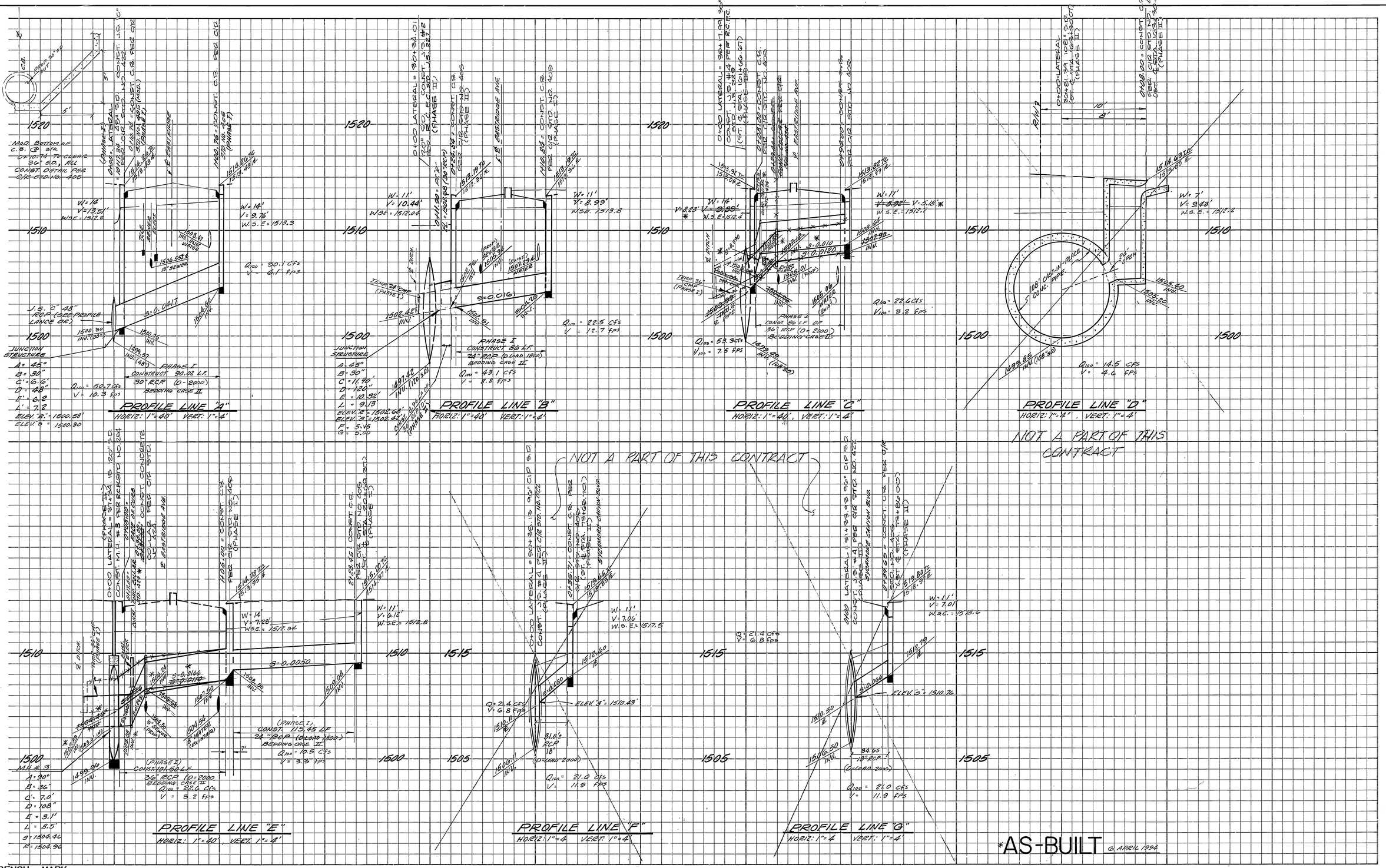

BENCH MARK

U.S.C.& G.S. DESIGNATION Z 749 . RIVERSIDE COUNTY DESIGNATION 800-47-68 . STANDARD BRASS DISK STAMPED Z 749 1945 ESTABLISHED BY C.& G.S. 1.7 MILES NORTHWEST ALONG THE ATCHISON, TOPEKA AND SANTA FE RAILWAY FROM THE STATION AT MARCH FIELD. SET BETWEEN THE TRACK AND U.S. HIGHWAY NO. 395 (I 215) 64.5 FEET SOUTHWEST OF THE SOUTHWEST EDGE OF THE HIGHWAY, 43.6 FEET NORTHEAST OF THE NORTHEAST RAIL OF TRACK. 20 FEET SOUTHEAST OF POST. IRON BENCH MARK DISK SET IN TOP OF A CONCRETE POST 0.4 FEET ABOVE GROUND.

DATE 1970 ELEVATION: 1536.119

REGISTERED PROFESSIONAL ENGINEER MATTHEW E. WEBB NO. 37385 EXP. 6-30-96 CIVIL STATE OF CALIFORNIA

UNDERGROUND SERVICE ALERT
CALL: TOLL FREE 1-800 422-4133
TWO WORKING DAYS BEFORE YOU DIG

BUSINESS TAX CERTIFICATE NO. 5751 EXPIRATION DATE: 12-31-93

ALBERT A. WEBB ASSOCIATES
CIVIL ENGINEERS
RIVERSIDE, CALIFORNIA
3788 McCRAY STREET 682-1070
APPROVED BY Matthew E. Webb DATE 4/26/93
R.E. No. 37385

W.O.90-3000 FOR: CITY OF RIVERSIDE F.B. 1034

MARK	REVISIONS	APPR.	DATE

DESIGNED BY JVR DRAWN BY JVR CHECKED BY GEH

CITY OF RIVERSIDE, CALIFORNIA
PUBLIC WORKS DEPARTMENT

APPROVED BY	BY	DATE
PRINCIPAL ENGINEER		5/4/93
PARK DEPARTMENT		
TRAFFIC DIVISION		
CHIEF PUB.WKS.ENGR.		5/7/93

APPROVED BY
DIRECTOR OF PUBLIC WORKS
DATE 5/13/93

STORM DRAIN PLANS
SYCAMORE CANYON BUSINESS PARK
ASSESSMENT DISTRICT NUMBER 1
LATERAL DETAILS

ACCOUNT No. 90-3000
DRAWING NUMBER D-623
SHEET 7 OF 8
SCALE: AS SHOWN
90-3000-D

profile sheet for s,d. - 68[0,34]PF: 903000 1157 13-Jan-93 10:26 AM / 90-3000B-1

INDEXED 7-7-94 GH

MISSING SHEET