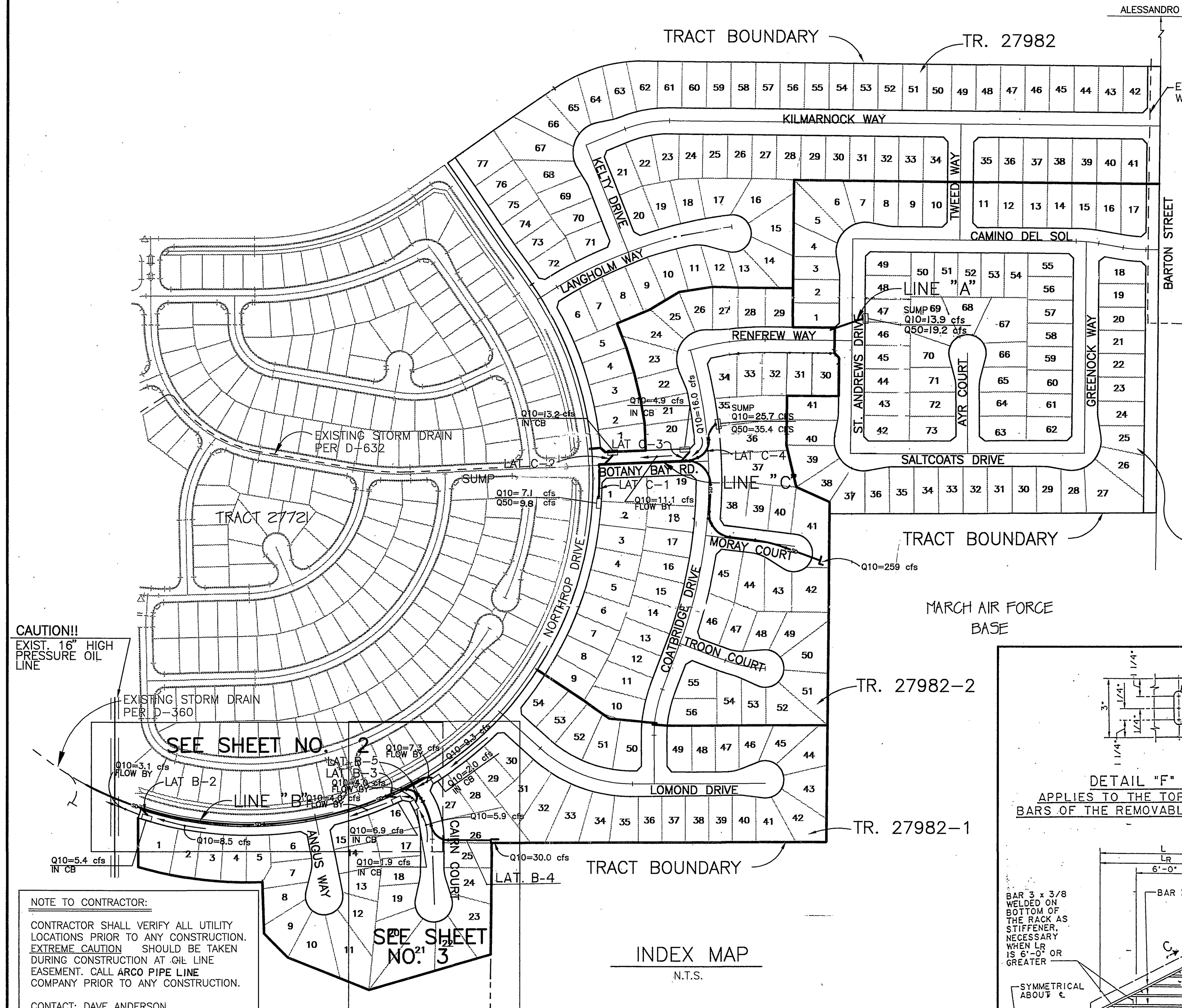

NOTE TO CONTRACTOR:

CONTRACTOR SHALL VERIFY ALL UTILITY LOCATIONS PRIOR TO ANY CONSTRUCTION. EXTREME CAUTION SHOULD BE TAKEN DURING CONSTRUCTION AT OIL LINE EASEMENT. CALL ARCO PIPE LINE COMPANY PRIOR TO ANY CONSTRUCTION.

CONTACT: DAVE ANDERSON
PHONE: (310) 428-9454

INDEX MAP
N.T.S.

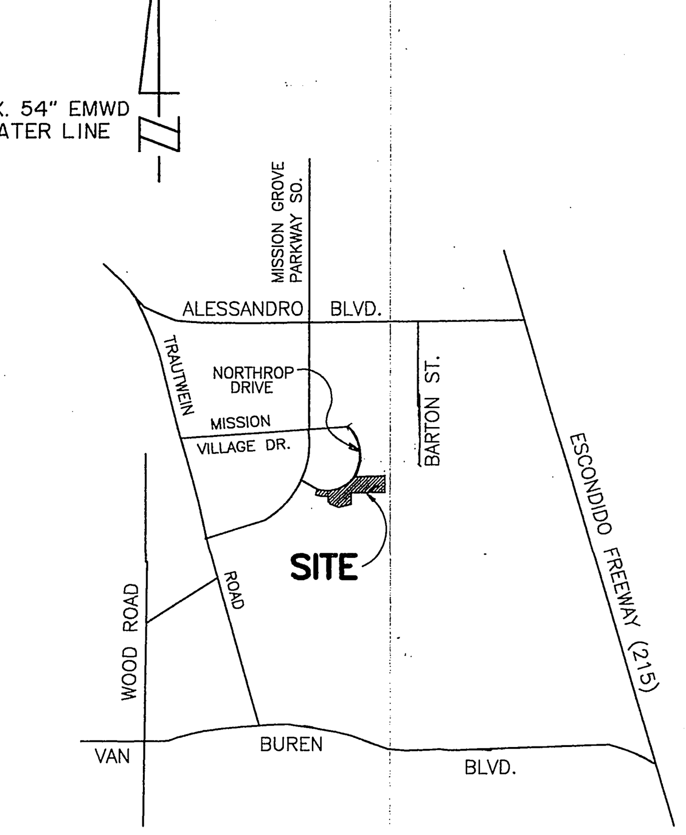

VICINITY MAP
N.T.S.

CONSTRUCTION NOTES

	CONSTRUCTION NOTES	QUANTITIES
1	CONSTRUCT 18" RCP (D-2000)	135 LF
3	CONSTRUCT 30" RCP (D-1250)	973 LF
4	CONSTRUCT 36" RCP (D-1250)	303 LF
5	CONSTRUCT 42" RCP (D-1200)	13 LF
8	CONSTRUCT CATCH BASIN PER CITY OF RIVERSIDE STD. DWG. NO 405.	4 EA
10	CONSTRUCT JUNCTION STRUCTURE "B" PER CITY OF RIVERSIDE STD. DWG. NO 421	1 EA
12	CONSTRUCT CONCRETE COLLAR PER CITY OF RIVERSIDE STD. DWG. NO. 424.	2 EA
14	CONSTRUCT MANHOLE "EZ", PER CITY OF RIVERSIDE STD. DWG. NO 431.	2 EA
15	CONSTRUCT MANHOLE "JM" PER CITY OF RIVERSIDE STD. DWG NO. 432.	2 EA
16	CONSTRUCT STANDARD PIPE BEDDINGS PER CITY OF RIVERSIDE STD. DWG. NO. 452. (SHOWN ON PROFILES)	——
17	CONSTRUCT MODIFIED HEADWALL PER CALTRANS STD. DWG D-89 PER DETAIL ON SHEET 3.	4 C.Y.
20	CONSTRUCT TRASH RACK PER DETAIL ON THIS SHEET.	1 EA.
22	CONSTRUCT CONCRETE PAD PER DETAIL ON THIS SHEET.	3.7 C.Y.

STORM DRAIN NOTES

1. Quantities shown are for information only and the City of Riverside is not responsible for their accuracy.
2. Construction shall be in accordance with City of Riverside Dept. of Public Works Standard Drawings, its Supplemental Notes and the Standard Specifications for Public Works Construction, Current Edition.
3. It shall be the responsibility of the contractor to clear the right of way in accordance with the provisions of law as it affects each utility including irrigation lines and appurtenances and at no cost to the City
4. Notice to contractor. The existence and location of any underground utility pipes or structures shown on these plans were obtained by a search of the available records. To the best of our knowledge there are no existing utilities exept as shown on these plans. The contractor is required to take precautionary measures to protect the utility lines shown and any other lines not of record or not shown on these plans.
5. The private engineer signing these plans is responsible for assuring the accuracy and acceptability of the work hereon. In the event of discrepancies arising during construction, the private engineer shall be responsible for determining an acceptable solution and revising the plans for approval by the City.
6. The contractor shall call in a locations request to UNDERGROUND SERVICE ALERT (USA), Phone No. 1-800-227-2600, two working days before digging No construction permit will be issued by the Public Works Department involving excavation for underground facilities unless the applicant has been provided an Inquiry Identification Number by U.S.A.
7. The developer preparing these plans shall be responsible for preserving or re-establishing and referencing survey monuments destroyed, disturbed or buried as a result of construction shown hereon.
8. All embankment fill shall be compacted to minimum of 90% maximum dry density and shall be of an approved quality.
9. Before the Rip-Rap is accepted, as placed, at the outlet of any drainage structure, it shall be tested under flows as close as possible to design conditions with water obtained from fire hydrants in the immediate area.
10. All flagged elevations shall be staked in the field by the private engineer.
11. Contractor agrees that he shall assume sole and complete responsibility for job site conditions during the course of construction of this project, including safety of all persons and property; that this requirement shall apply continuously and not be limited to normal working hours; and that the contractor shall defend, indemnify and hold the owner and the engineer harmless from any and all liability, real or alleged, in connection with performance of work on this project, excepting for liability arising from the sole negligence of the owner or the engineer.
12. The concrete cover on the inside of all concrete pipe must be increased to provide a min. of 1.5" over the reinforcing when the design velocities exceed 20 fps. The concrete design strength in these reaches shall be:
fc = 5000 psi. for velocities exceeding 20 fps. and
fc = 6000 psi. for velocities exceeding 30 fps.
13. No person shall perform any construction activity or install any objects within the public rights-of-way or easements of the City of Riverside without a valid Construction Permit or, a Street Opening Permit or, an Encroachment Permit issued by the City's Public Works Department.

CAST-IN-PLACE REQUIREMENTS

1. FOR QUALITY CONTROL DURING PLACEMENT, EMPLOY AN EXPERIENCED R.C.E OR TECHNICIAN HAVING SUITABLE C.I.P.P. EXPERIENCE.
2. CONTROL CONCRETE BY MEANS OF 6"x12" TTEXT CYLINDERS MINIMUM OR I SET OF FOUR (4) CYLINDERS/100 C.Y. AND NOT LESS THAN TWO (2) SETS CYLINDERS PER EACH DAY'S POUR.
3. SUPPLYING BATCH PLANT SHALL BE INSPECTED AT THE START OF CONSTRUCTION AND NOT LESS THAN ONCE EACH WEEK THEREAFTER TO OBSERVE PLANT OPERATIONS BATCH WEIGHTS AND OTHER CONCRETE CONTROL MEASURES.
4. CONCRETE MIXES SHALL NOT HAVE LESS THAN SIX (6) SACKS OF PORTLAND CEMENT/C.U. YD.
5. CONCRETE MIX DESIGNS SHALL BE SUBMITTED BY CONTRACTOR FOR APPROVAL PRIOR TO START OF CONSTRUCTION.
6. IF AND WHEN FLOW VELOCITY EXCEEDS 10 F.P.S. A 140' SEGMENT OF THE INVERT SHALL BE THICKENED 2 INCHES IN WALL THICKNESS AS "SACRIFICIAL CONCRETE" TO RESIST ABRASION. COMPRESSIVE STRENGTH OF CONCRETE FOR DESIGN VELOCITIES ≧ 20 F.P.S. SHALL BE Fc=4000 PSI FOR DESIGN VELOCITIES ≧ 30 F.P.S. Fc=5000 P.S.I. SHALL BE PROVIDED.
7. MAXIMUM PERMISSIBLE CONCRETE SLUMP SHALL BE 2 1/2", 1 1/2" MIN. TO 2 1/2" MAX.
8. CONTRACTOR SHALL ALLOW INSPECTOR INTO PIPE WHILE UNDER CONSTRUCTION AND "ROD" FOR WALL THICKNESS AT A MIN. OF 25 C.Y. OF THE POUR.
9. AT THE END OF ALL POURS AND AT THE END OF EACH WORKING DAY THE CONTRACTOR SHALL INSTALL #4 DOWELS 24" LONG 12" INTO LAST POUR AT 12" CENTERS AROUND THE CIRCUMFERENCE OF CAST-IN-PLACE PIPE.
10. C.I.P.P. CONCRETE STRENGTH TO BE MINIMUM 3250 P.S.I.

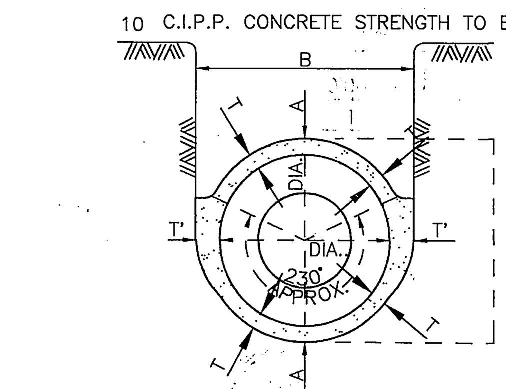

DIA.	A	MIN. B	T	MIN. T
72"	86"	87"	7"	7"
84"	100"	101"	8"	8"

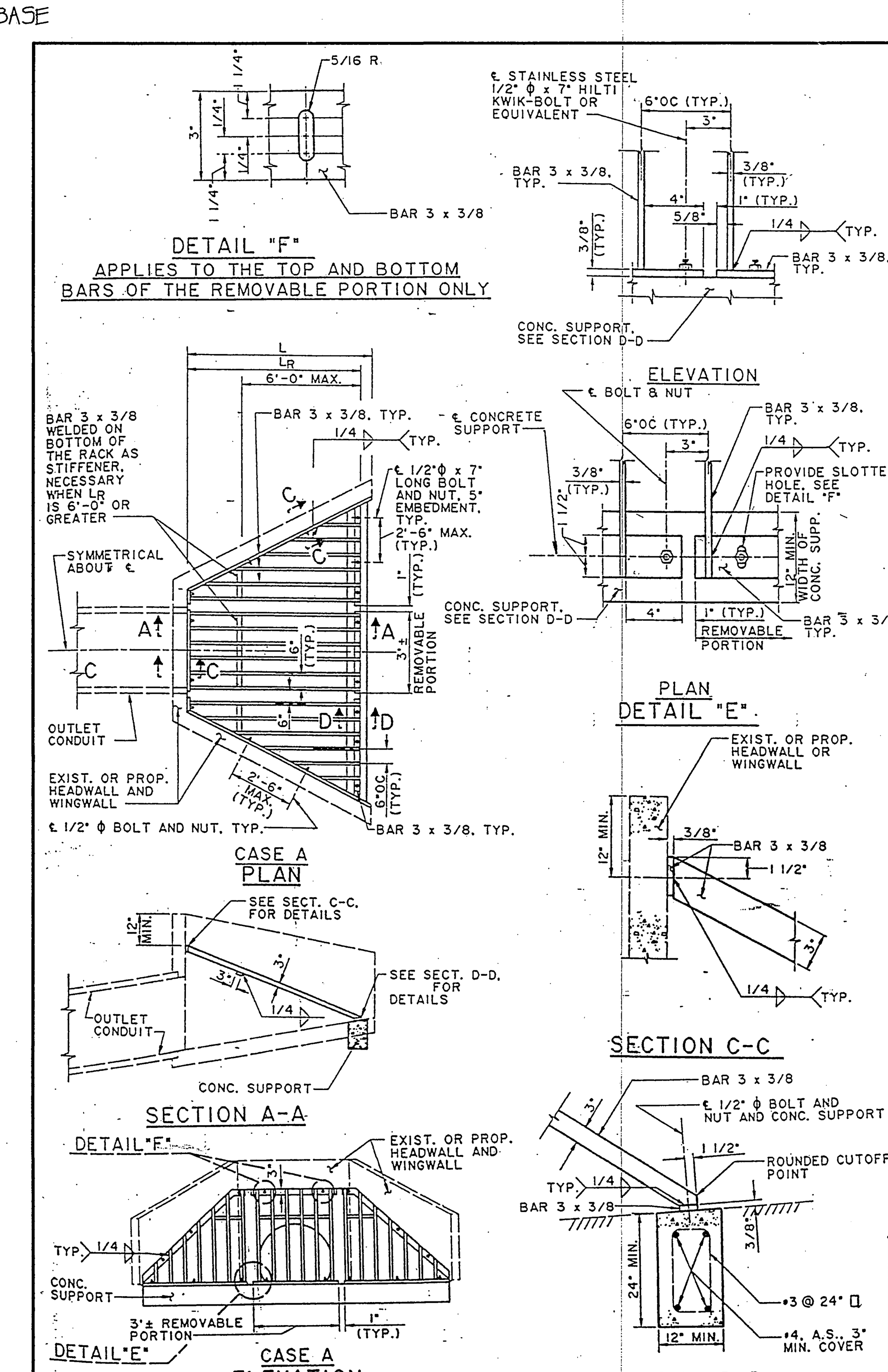

NOTES:

1. MAXIMUM SIZE OF OUTLET TO BE USED WITH THIS RACK IS 48" PIPE OR 48" WIDE RCB. MAXIMUM LENGTH OF RACK L_R IS 10'-0"
2. L_R CAN BE ADJUSTED SO THAT THE SLOPE OF THE RACK IS APPROXIMATELY 2 HORIZONTAL TO 1 VERTICAL.
3. THE CONCRETE SUPPORT IS NOT NECESSARY IS EXISTING OR PROPOSED INLET STRUCTURE HAS ADEQUATE SUPPORT CUTOFF WALL. IT DOES NOT ELIMIMATE THE NEED FOR A CUTOFF WALL BUT CAN BE INTEGRATED WITH ONE WHEN REQUIRED AT A PARTICULAR INSTALLATION.
4. GALIVANIZE ALL EXPOSED FERROUS PARTS AFTER FABRICATION.
5. IF FIELD WELDS ARE NECESSARY, USE GALVICON, GALVALLOY OR DEPARTMENT APPORVED EQUAL FOR COATING.
6. ALL BOLTS SHALL BE 1/2" IN DIAMETER AND 7' IN LENGTH. ON REMOVABLE PORTION OF THE RACK, USE 300 SERIES STAINLESS STEEL BOLTS AND NUTS. WHERE HEADWALL AND WINGWALL ARE EXISTING, HILTI KWIK-BOLT OR EQUIVALENT CAN BE USED.

TRASH RACK (INCLINED) FOR STORM DRAIN (20)
N.T.S.

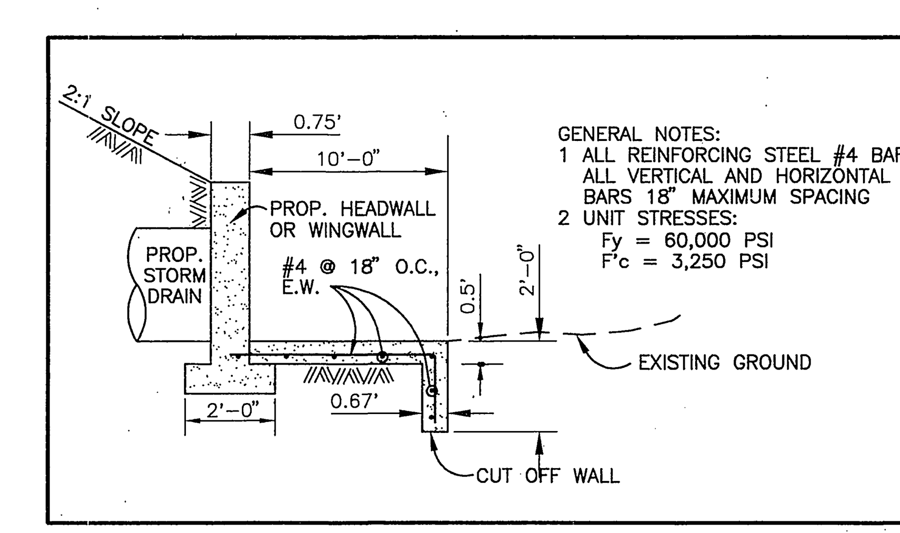

CONCRETE PAD DETAIL (22)
N.T.S.

CITY OF RIVERSIDE
PUBLIC UTILITIES DEPARTMENT-ELECTRIC
OVERHEAD & UNDERGROUND
William F. Marion 5/18/95
APPROVED BY DATE

ARCO PIPE LINE COMPANY
APPROVED BY: [signature] DATE: 4/10/95

REVIEWED BY W.M.W.D.
SHEETS 1 THROUGH 3
FOR NON-INTERFERENCE COMPLIANCE ONLY
[signature] 12/15/97
CIVIL ENGINEER RCE #46212

Underground Service Alert
Call: TOLL FREE
1 - 800
227 - 2600
TWO WORKING DAYS BEFORE YOU DIG

PRIVATE ENGINEERING NOTE

CONSTRUCTION CONTRACTOR AGREES THAT IN ACCORDANCE WITH GENERALLY ACCEPTED CONSTRUCTION PRACTICES, CONSTRUCTION CONTRACTOR WILL BE REQUIRED TO ASSUME SOLE AND COMPLETE RESPONSIBILITY FOR JOB SITE CONDITIONS DURING THE COURSE OF CONSTRUCTION OF THE PROJECT, INCLUDING SAFETY OF ALL PERSONS AND PROPERTY; THAT THIS REQUIREMENT SHALL BE MADE TO APPLY CONTINUOUSLY AND NOT BE LIMITED TO NORMAL WORKING HOURS, AND CONSTRUCTION CONTRACTOR FURTHER AGREES TO DEFEND, INDEMNIFY AND HOLD DESIGN PROFESSIONAL HARMLESS FROM ANY AND ALL LIABILITY, REAL OR ALLEGED, IN CONNECTION WITH THE PERFORMANCE OF WORK ON THIS PROJECT, EXCEPTING LIABILITY ARISING FROM THE SOLE NEGLIGENCE OF DESIGN PROFESSIONAL.

REGISTERED PROFESSIONAL ENGINEER — TECK C. LOH No. 50293 Exp. 6-30-01 CIVIL — STATE OF CALIFORNIA

PREPARED UNDER THE DIRECTION OF: [signature]
REGISTERED CIVIL ENGINEER NO. 50293
EXPIRATION DATE: 6-30-01 DATE: 2-13-95

CEG CANTY ENGINEERING GROUP, INC.
CIVIL ENGINEERING - PLANNING - SURVEYING
3120 CHICAGO AVENUE, SUITE 180, P.O. BOX 52050, RIVERSIDE, CA 92517
TEL (909) 683 - 5234 FAX (909) 683 - 5301
CITY OF RIV. BUSINESS TAX ACCT. NO: 69372 EXP. DATE: 4-8-98

SCALE: AS SHOWN
DATE: 9-21-94
BENCH MARK: CITY OF RIVERSIDE "E8-A" P.K. NAIL AND TAG ON TOP OF 35 X 50' X 20' HIGH GRANITE BOULDER, 100' W'LY OF TRAUTWEIN ROAD AND 0.3 MILE N'LY OF WOOD ROAD. FB 735/74 ELEV: 1588.453

MARK	REVISIONS	APPR.	DATE

DESIGNED BY T.C.L. DRAWN BY J.W./C.C. CHECKED BY D.J.E.

CITY OF RIVERSIDE, CALIFORNIA
DEPARTMENT OF PUBLIC WORKS

APPROVED BY	BY	DATE
PRINCIPAL ENGR.	[initials]	1/30/98
PARK DEPARTMENT	—	—
TRAFFIC DIVISION	—	—
DEP. P.W. DIRECTOR		
STREET SERVICES	RC	12-30-97

APPROVED BY Richard McGrath
DIRECTOR OF PUBLIC WORKS
DATE 2-5-98

TRACT NO. 27982-1
STORM DRAIN PLANS
TITLE SHEET

FOR: FIESTA HOMES

PROJECT NO. PROJECT_NO.
D-636
SHEET 1 OF 3
FILE NO.: 9413168

K:\TR27982\3168ST01.DWG
PLOT DATE: 2-13-94

INDEXED 4-30-98 (H)

EXISTING FINISHED SURFACE AT CL STORM DRAIN

EXISTING 42" RCP PER D-630

1+44.83 CL M.H. "JM" = ST. STA. 1+88.06

BR. & P. RIM EL.

HGL

S=0.0762

S=0.0220

S=0.0107

(S=0.0107)

Q10=87.7 CFS V=22.3 FPS

78.45 FL EL. "S"

CONSTRUCT 11.06 LF OF 42" R.C.P. (D-1200)

MATCH EXIST. 42" RCP

CASE II PIPE BEDDING PER STD. 452

3+18.67 BC = ST. STA. 13+61.60

3+50.00 GB 82.67 FL

CAUTION!! EXISTING 16" H.P. OIL LINE (90.44 FL) FIELD VERIFY

4' MIN CLEARANCE

4+10.00 GB 93.99 FL

IDENT. 94 PO INT

4+40.00 94.29 FL

4+57.67 94.47 FL

4+62.34 95.02 FL

95.37 FL ELEV. "S"

Q10=46.6 CFS V=23.0 FPS

CONSTRUCT 302.94 L.F. OF 36" R.C.P. (D-1250)
CASE II PIPE BEDDING PER STD. 452

SD. STA. 4+60.00 CL MH "EZ" (14) = ST. STA. 15+02.43

ISOCLINE RIM EL.

EXISTING FINISHED SURFACE AT CL STORM DRAIN

SD. STA. 7+80.00 CL MH "EZ" (14) = ST. STA. 18+20.61

RIM EL. 95.5 ±

Q10=41.2 CFS V=9.6 FPS

CONSTRUCT 315.33 L.F. OF 30" R.C.P. (D-1250)
CASE II PIPE BEDDING PER STD. 452

7+77.67 88.17 FL

7+92.34 88.22 FL

SD. STA. 11+00.19 CL J.S. "B" = ST. STA. 21+38.48

SD. STA. 11+44.57 CL M.H. "JM" = ST. STA. 21+83.11

07.64 RIM EL.

07.73 TC 06.98 FL

HGL

S=0.0105

WS=05.42

01.96 FL

EXIST. 8" S.D. PER D-630

S=0.0100

PROP. 8"W 1598.8' FL ANGUS WAY

PROP. 8" SWR 1595.5' FL ANGUS WAY

RELOCATE EX. 4" ELEC. 00.94' BOT.

EXIST. 10" WATER LINE TO BE REMOVED (1600.00 FL) HOGAN LANE

EXIST 8" SEWER (1595.3±) FT HOGAN LANE

01.9D FL ELEV. "S"

01.40 FL

Q10=41.2 CFS V=9.6 FPS

Q10=34.3 CFS V=7.0 FPS

CONSTRUCT 361.23 L.F. OF 30" R.C.P. (D-1250)
CASE II PIPE BEDDING PER STD. 452

11+94.65 PROP. R.C.P. 03.57 FL

11+43.57 1601.83 FL

11+54.07 1602.92 FL

CONSTRUCT 76.89 LF OF 12" RCP (D-2000) CASE BEDDING PER STD. 452

12+26.96 EC 03.73 FL

Q10=2.0 CFS V=1.4 FPS

PROFILE SCALES
1" = 40' HORZ.
1" = 4' VERT.

0 1 2 3 4 5 6 7 8 9 10 11 12

1600 — 1590 — 1580 —

1610 — 1600 — 1590 —

SCALE: 1" = 40'

EXISTING SEWER PER S-1662

EXISTING 12' SEWER EASEMENT

SD. STA. 1+44.83 CL MH "JM" = ST. STA. 1+88.06

LATERAL "B-1" S.32°44'18"W. SEE SHEET 3

EXISTING ARCO PIPE LINE EASEMENT

CAUTION!! EXIST. ELEC. OVERHEAD.

EXISTING 40' UTILITY EASEMENT

EXIST. 12" WATER

EXISTING STORM DRAIN PER D-630.

SD. STA. 1+32.77 MATCH EXIST. 42" RCP = ST. STA. 1+76.60

SD. STA. 0+12.06 B.C. MATCH EXISTING

REMOVE 25± LF PORTION OF EXIST. 42" RCP

EXIST. S.D. PER D-630

PM 23178

TR. 27721-1

SD. STA. 4+60.00 CL MH "EZ" (14) = ST. STA. 15+02.43

ST. STA. 19+51.40 CL NORTHROP = ST. STA. 0+00.00 CL ANGUS WAY

EXISTING IMPROVEMENTS PER R-3374.

PROP. 8" SEWER PER S-1673

NORTHROP DRIVE

FLOWBY Q10=3.1 CFS

Q10=8.5 CFS

3+18.67 BC = ST. STA. 13+61.60

LATERAL "B-2" S.41°56'25"W. SEE PROFILE SHEET 3

CAUTION!! EXISTING 16" H.P. OIL LINE

CONSTRUCT WITH EXTREME CAUTION AT OIL LINE EASEMENT. THE EXACT ELEVATION OF EX. OIL LINE CROSSING MUST VERIFIED PRIOR CONSTRUCTION

ST. STA. 15+24.03 CL CB = ST. STA. 15+61.46 Q10= 5.4 CFS

PROPOSED IMPROVEMENTS PER R-3404

LINE "B"

SD. STA. 7+80.00 CL MH "EZ" (14) = ST. STA. 18+20.61

ST. STA. 20+76.14 CL NORTHROP = ST. STA. 1+51.00 CL HOGAN LN. (PRIVATE)

HOGAN LANE (PRIVATE)

EX. 10" G.V. & 10" WATER LINE TO SOUTH TO BE REMOVED AND REPLACED WITH BLIND FLANGE AND THRUST BLOCK BY WMWD FORCES AT DEVELOPER'S EXPENSE TO BE DONE CONCURRENTLY WITH THE WATER PLAN.

ANGUS WAY

SD. STA. 11+00.19 CL J.S. "B" = ST. STA. 21+38.48

SD. STA. 11+44.57 CL M.H. "JM" = ST. STA. 21+83.11

SD. STA. 11+94.65 PROP. R.C.P.

ST. STA. 22+16.14 CL CAIRN COURT = ST. STA. 0+00.00 CL NORTHROP

SD. STA. 22+32.90

SD. STA. 12+26.96 EC = ST. STA. 22+43.36 CL CB W=4' Q10= 2.0 CFS

CAIRN COURT

LATERAL "B-3" S.83°37'20"E. SEE PROFILE SHEET 3

LATERAL "B-4" SEE SHEET 3

Q10=7.3 CFS

Q10=4.0 CFS

Q10=10.8 CFS

FLOWBY

15 16 27

1+44.83 CL M.H. "JM"	
LATERAL "B-1"	
A	30°00'00"
B	42"
C	9.9'
D_1	36"
D_2	42"
E	9.9'
L	10.9'
EL "R"	78.49'
EL "S"	78.45'

11+00.19 CL J.S. "B"	
LATERAL "B-3"	
A	30°00'00"
B	18"
C	5.9'
D_1	30"
D_2	30"
E	5.3
L	4.5'
EL "R"	02.08
EL "S"	01.90

11+44.57 CL M.H. "JM"	
LATERAL "B-4"	
A	30°00'00"
B	30"
C	7.5'
D_1	18"
D_2	30"
E	7.5
L	8.5
EL "R"	02.11
EL "S"	01.96

CL CURVE DATA				
NO.	Δ	R	L	T
①	09°12'07"	880.00'	141.33'	70.82'
②	20°50'05"	880.00'	320.00'	161.79'
③	20°50'50"	880.00'	320.19'	161.89'
④	02°53'22"	880.00'	44.38'	22.19'
⑤	03°15'38"	880.00'	50.08'	25.05'
⑥	43°41'19"	45.00'	34.31'	18.04'

40 20 0 40 80 120

SCALE IN FEET

NOTE TO CONTRACTOR:

CONTRACTOR SHALL VERIFY ALL UTILITY LOCATIONS AND ELEVATION PRIOR TO ANY CONSTRUCTION EXTREME CAUTION SHOULD BE TAKEN DURING CONSTRUCTION AT OIL LINE EASEMENT. CALL ARCO PIPE LINE COMPANY AT LEAST 48 HOURS PRIOR TO ANY CONSTRUCTION OR POTHOLING

CONTACT: DAVE ANDERSON
PHONE: (310) 428-9454

ARCO PIPE LINE COMPANY

APPROVED BY: _____ DATE: 4/11/95

CITY OF RIVERSDIE
PUBLIC UTILITIES DEP.—ELECTRIC
OVERHEAD & UNDERGROUND

APPROVED BY: _____ DATE: 5/18/95

Underground Service Alert
Call: TOLL FREE 1 - 800 227 - 2600
TWO WORKING DAYS BEFORE YOU DIG

PRIVATE ENGINEERING NOTE

CONSTRUCTION CONTRACTOR AGREES THAT IN ACCORDANCE WITH GENERALLY ACCEPTED CONSTRUCTION PRACTICES, CONSTRUCTION CONTRACTOR WILL BE REQUIRED TO ASSUME SOLE AND COMPLETE RESPONSIBILITY FOR JOB SITE CONDITIONS DURING THE COURSE OF CONSTRUCTION OF THE PROJECT, INCLUDING SAFETY OF ALL PERSONS AND PROPERTY; THAT THIS REQUIREMENT SHALL BE MADE TO APPLY CONTINUOUSLY AND NOT BE LIMITED TO NORMAL WORKING HOURS, AND CONSTRUCTION CONTRACTOR FURTHER AGREES TO DEFEND, INDEMNIFY AND HOLD DESIGN PROFESSIONAL HARMLESS FROM ANY AND ALL LIABILITY, REAL OR ALLEGED, IN CONNECTION WITH THE PERFORMANCE OF WORK ON THIS PROJECT, EXCEPTING LIABILITY ARISING FROM THE SOLE NEGLIGENCE OF DESIGN PROFESSIONAL.

REGISTERED PROFESSIONAL ENGINEER — TEDK C. LOH No. 50293 Exp. 6-30-01 CIVIL — STATE OF CALIFORNIA

PREPARED UNDER THE DIRECTION OF: Ted Loh
REGISTERED CIVIL ENGINEER NO. 50293
EXPIRATION DATE: 6-30-01 DATE: 3-22-95

CBG CANTY ENGINEERING GROUP, INC.
CIVIL ENGINEERING – PLANNING – SURVEYING
3120 CHICAGO AVENUE, SUITE 180, P.O. BOX 52050, RIVERSIDE, CA 92517
TEL (909) 683 – 5234 FAX (909) 683 – 5301

SCALE: 1"=40'
DATE: 9-21-94

BENCH MARK: CITY OF RIVERSIDE "E8-A" P.K. NAIL AND TAG ON TOP OF 35 X 50' X 20' HIGH GRANITE BOULDER, 100' W'LY OF TRAUTWEIN ROAD AND 0.3 MILE N'LY OF WOOD ROAD. FB 735/74 ELEV: 1588.453

MARK	REVISIONS	APPR.	DATE

DESIGNED BY T.C.L. DRAWN BY J.W./C.C. CHECKED BY D.J.E.

CITY OF RIVERSIDE, CALIFORNIA
DEPARTMENT OF PUBLIC WORKS

APPROVED BY	BY	DATE
PRINCIPAL ENGR.		4/4/95
PARK DEPARTMENT	—	—
TRAFFIC DIVISION	—	—
DEP. P.W. DIRECTOR		
STREET SERVICES		4/4/95

APPROVED BY Richard McDonald
DIRECTOR OF PUBLIC WORKS
DATE 2-5-98

TRACT NO. 27982-1
STORM DRAIN PLAN
LINE "B"
FOR: FIESTA HOMES

PROJECT NO. D-636
SHEET 2 OF 3
FILE NO.: 9413168

INDEXED 4-30-98 GH

K:\TR27982A\3-16STD1.DWG
PLOT DATE: 3-22-95

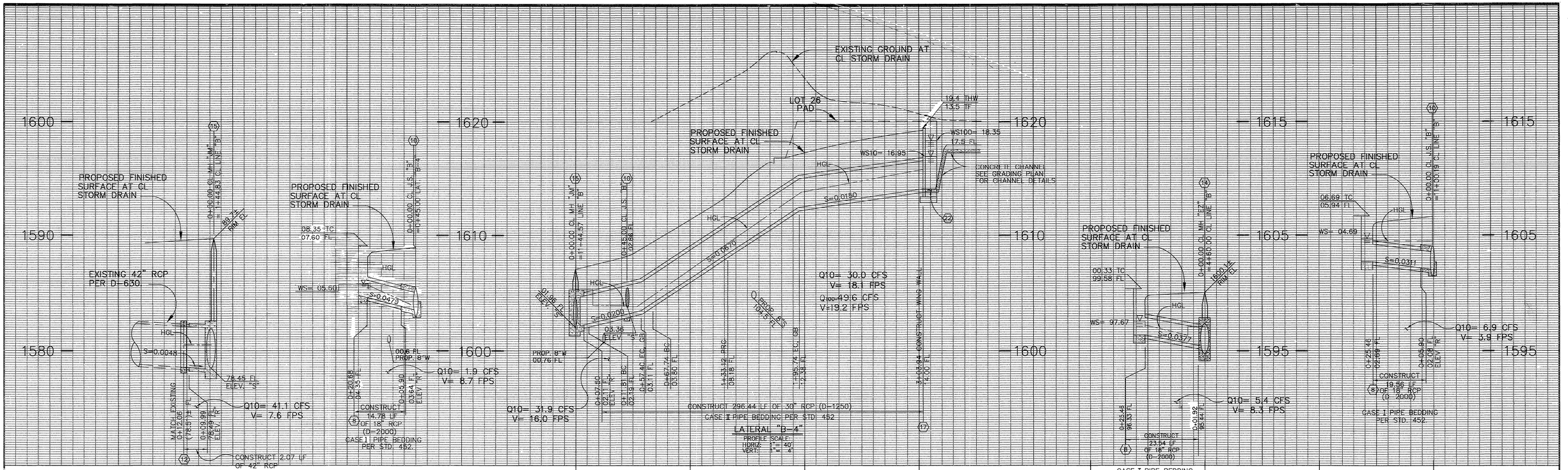

LATERAL "B-1"
PROFILE SCALE: HORIZ: 1"= 20' VERT: 1"= 4'
SEE PLAN VIEW ON SHEET 2

LATERAL "B-5"
PROFILE SCALE: HORIZ: 1"= 20' VERT: 1"= 4'
SEE PLAN VIEW ON THIS SHEET

LATERAL "B-2"
PROFILE SCALE: HORIZ: 1"= 20' VERT: 1"= 4'
SEE PLAN VIEW ON SHEET 2

LATERAL "B-3"
PROFILE SCALE: HORIZ: 1"= 20' VERT: 1"= 4'
SEE PLAN VIEW ON SHEET 2

GENERAL NOTES

1. No deduction made in quantities for thickness of pipe walls
2. All reinforcing steel #4 bars. All vertical and horizontal tie bars 18" maximum spacing.
3. Length of wall "W" may be varied to suit conditions encountered in the field, and straight line interpolation may be used to calculate quantities.
4. Quantities are for design purposes only.

STRUT DETAILS

SPACING IN FEET OF TIMBER STRUTS FOR STRUCTURAL STEEL PLATE PIPE									
PIPE DIA	STRUT SIZE	HEIGHT OF FILL IN FEET							
		0-20	30	40	50	60	70	80	100+
240 Thru 232	8x8	5.0	3.0	3.0	3.0	3.0			
	10x10	8.0	4.5	4.5	4.5	4.5			

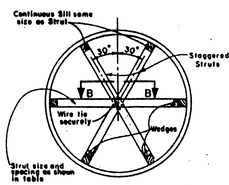

TYPICAL SECTION

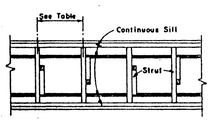

SECTION B-B

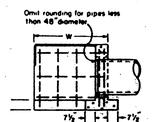

SECTION "L" HEADWALL

D	H	L/2	LENGTH OF W							
			3'-4"		4'-10"		6'-4"		7'-10"		9'-4"	
in	ft-in	ft-in	Steel Lbs	Conc Cu Yds	Steel Lbs	Conc Cu Yds	Steel Lbs	Conc Cu Yds	Steel Lbs	Conc Cu Yds	Steel Lbs	Conc Cu Yds
30	4-2	5-0	95	1.55	110	1.80	120	2.05	135	2.29		

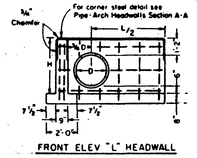

FRONT ELEV "L" HEADWALL

MODIFIED HEADWALL DETAIL (7)

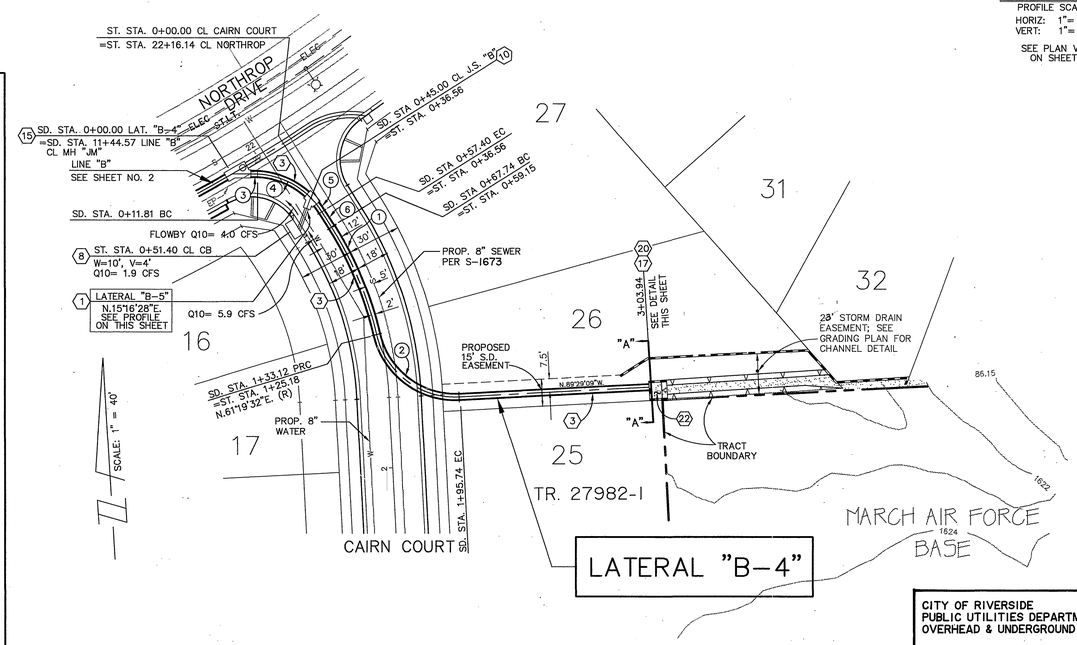

LATERAL "B-4"

0+45.00 LATERAL "B-4" CL J.S. "B"	
LATERAL "B-5"	
A	60°00'00"
B	18"
C_1	5.9'
D	30"
E_1	5.3'
L	4.5'
EL "R"	03.64
EL "S"	03.36

CL CURVE DATA				
NO.	Δ/BEARING	R	L/ DIST.	T
1	18°55'02"	198.00'	65.37'	32.99'
2	79°43'42"	45.00'	62.62'	37.58'
3	S.86°43'58"E.	–	11.81'	–
4	42°16'14"	45.00'	33.20'	17.40'
5	15°47'16"	45.00'	12.40'	6.24'
6	S.28°40'28"E.	–	10.34'	–

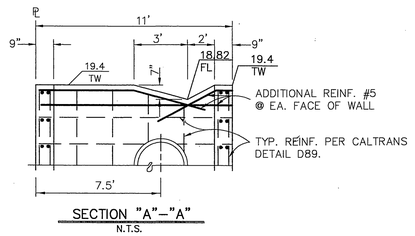

SECTION "A"–"A"
N.T.S.

CITY OF RIVERSIDE
PUBLIC UTILITIES DEPARTMENT-ELECTRIC
OVERHEAD & UNDERGROUND

William F. Morrison 5/18/95
APPROVED BY DATE

40 20 0 40 80 120
SCALE IN FEET

Underground Service Alert
Call: TOLL FREE 1 – 800 227 – 2600
TWO WORKING DAYS BEFORE YOU DIG

PRIVATE ENGINEERING NOTE

CONSTRUCTION CONTRACTOR AGREES THAT IN ACCORDANCE WITH GENERALLY ACCEPTED CONSTRUCTION PRACTICES, CONSTRUCTION CONTRACTOR WILL BE REQUIRED TO ASSUME SOLE AND COMPLETE RESPONSIBILITY FOR JOB SITE CONDITIONS DURING THE COURSE OF CONSTRUCTION OF THE PROJECT, INCLUDING SAFETY OF ALL PERSONS AND PROPERTY; THAT THIS REQUIREMENT SHALL BE MADE TO APPLY CONTINUOUSLY AND NOT BE LIMITED TO NORMAL WORKING HOURS; AND CONSTRUCTION CONTRACTOR FURTHER AGREES TO DEFEND, INDEMNIFY AND HOLD DESIGN PROFESSIONAL HARMLESS FROM ANY AND ALL LIABILITY, REAL OR ALLEGED, IN CONNECTION WITH THE PERFORMANCE OF WORK ON THIS PROJECT, EXCEPTING LIABILITY ARISING FROM THE SOLE NEGLIGENCE OF DESIGN PROFESSIONAL.

REGISTERED PROFESSIONAL ENGINEER — TECK C. LOH No. 50293 — Exp. 6-30-01 — CIVIL — STATE OF CALIFORNIA

PREPARED UNDER THE DIRECTION OF: Ted Loh
REGISTERED CIVIL ENGINEER NO. 50293
EXPIRATION DATE: 6-30-01 DATE: 11-17-94

CBG CANTY ENGINEERING GROUP, INC.
CIVIL ENGINEERING – PLANNING – SURVEYING
3120 CHICAGO AVENUE, SUITE 180, P.O. BOX 52050, RIVERSIDE, CA 92517
TEL (909) 683 – 5234 FAX (909) 683 – 5301

SCALE: 1"= 40'
DATE: OCT. 1994

BENCH MARK: CITY OF RIVERSIDE "E8-A"
P.K. NAIL AND TAG ON TOP OF 35 X 50' X 20' HIGH GRANITE BOULDER, 100' W'LY OF TRAUTWEIN ROAD AND 0.3 MILE N'LY OF WOOD ROAD. FB 735/74 ELEV: 1588.453

MARK	REVISIONS	APPR.	DATE

DESIGNED BY T.C.L. DRAWN BY S.L.C. CHECKED BY D.J.E.

CITY OF RIVERSIDE, CALIFORNIA
DEPARTMENT OF PUBLIC WORKS

	BY	DATE
APPROVED BY		
PRINCIPAL ENGR.	[illegible]	4/20/95
PARK DEPARTMENT	—	—
TRAFFIC DIVISION	—	—
DEP. P.W. DIRECTOR STREET SERVICES	[illegible]	4/26/95

APPROVED BY Richard McGrath
DIRECTOR OF PUBLIC WORKS
DATE 2-5-98

TRACT NO. 27982-1
STORM DRAIN PLANS
LATERALS "B-1", "B-2", "B-3", AND "B-4"
FOR: FIESTA HOMES

PROJECT NO. D-636
SHEET 3 OF 3
FILE NO.: 9413168

11-16-94
K:\TR27982\STORM\3168SD03.DWG

INDEXED 4-30-98 LH