RIVERSIDE CITY OF RIVERSIDE CALIFORNIA

PUBLIC WORKS DEPARTMENT

ARLINGTON AVENUE UNDERPASS

STORM DRAIN PUMP STATION

GENERAL CONSTRUCTION NOTES:

1. EXISTING UTILITIES SHOWN ON THIS PLAN ARE PLOTTED FROM UTILITY RECORDS. THE CONTRACTOR IS REQUIRED TO TAKE DUE PRECAUTIONARY MEASURES TO LOCATE AND PROTECT ALL UTILITIES WHETHER OR NOT SHOWN ON THIS PLAN. IF THE COVER OF A UTILITY IS KNOWN, IT IS SHOWN IN THE PROFILE. UTILITIES SHOWN IN THE PROFILE AS —T—T—T— INDICATES THAT THE COVER IS UNKNOWN, BUT THE UTILITY IS NOT EXPECTED TO CONFLICT WITH THE PROPOSED IMPROVEMENTS.
2. ALL ELEVATIONS SHOWN ON THE PLANS SHALL BE STAKED IN THE FIELD.
3. CONSTRUCTION SHALL BE IN ACCORDANCE WITH THE CITY OF RIVERSIDE STANDARD DRAWINGS AND STANDARD SPECIFICATIONS FOR PUBLIC WORKS CONSTRUCTION, 1997 EDITION. REFERENCE TO STATE STANDARDS REFER TO STATE OF CALIFORNIA, DEPARTMENT OF TRANSPORTATION STANDARD PLANS AND SPECIFICATIONS, 1995 METRIC EDITION.
4. CONFLICTING UTILITIES IN THE CONSTRUCTION AREA SHALL BE RELOCATED OR ABANDONED. PIPE ABANDONMENT SHALL CONFORM TO STATE STANDARDS AND SPECIFICATIONS.
5. ALL CONSTRUCTION SHALL BE IN ACCORDANCE WITH THE CITY OF RIVERSIDE DEPARTMENT OF PUBLIC WORKS STANDARD DRAWINGS AND THE STANDARD SPECIFICATIONS FOR PUBLIC WORKS CONSTRUCTION, 1991 EDITION, INCLUDING THE 1992 SUPPLEMENT.
6. EXISTING UTILITIES SHOWN ON THESE PLANS ARE PLOTTED FROM UTILITY RECORDS. THE CONTRACTOR IS REQUIRED TO TAKE DUE PRECAUTIONARY MEASURES TO LOCATE AND PROTECT ALL UTILITIES WHETHER SHOWN ON THESE PLANS OR NOT.
7. ALL ELEVATIONS SHOWN ON THE PLANS SHALL BE STAKED IN THE FIELD.
8. PRIME CONTRACTORS BIDDING THIS WORK SHALL HAVE A CLASS "A", "C-34", OR "C-42" LICENSE.
9. ALL VALUES SHOWN ON THE PLANS ARE FOR APPROPRIATE METRIC UNITS. ENGLISH UNITS ARE SHOWN IN PARENTHESES ( ) FOR CONVENIENCE.

SPECIFIC CONSTRUCTION NOTES:

⬢ NUMBERS ABOVE 100 IN A HEXAGON ON THE PLAN REFER TO THE RESPECTIVE STANDARD DRAWING AND SHALL BE CONSTRUCTED ACCORDINGLY, UNLESS MODIFICATIONS ARE NOTED ON THE PLAN. ANY NUMBER SHOWN BELOW THE STANDARD DRAWING NUMBER INDICATES THE SPECIFIC ALTERNATE TO BE CONSTRUCTED.

D74B / GDO — CONSTRUCT TYPE GDO DRAINAGE INLET, CALTRANS STD DWG D74B WITH TRASH RACK AND TYPE 600-10C BICYCLE PROOF GRATE. CONSTRUCT GUTTER DEPRESSION PER CALTRANS STD DWG D78 FOR FOR TYPE GDO INLET GRADE SAG. D=75 mm, W=1.2 m

(1) REMOVE EXISTING BULKHEAD. CONNECT PROPOSED 600 mm (24") RCP STORM DRAIN TO EXISTING 600 mm (24") STUB.

(2) CONSTRUCT CITY STANDARD 422 JUNCTION STRUCTURE C. A= 90°, B= 600 mm (24"), C'= 1.128 m (3.70'), D1= 1050 mm (42"), D2= 1050 mm (42"), E'= 0.884 m (2.9'), L'= 1.189 m (3.90'), ELEV R= 256.300 m, ELEV S= 256.290 m.

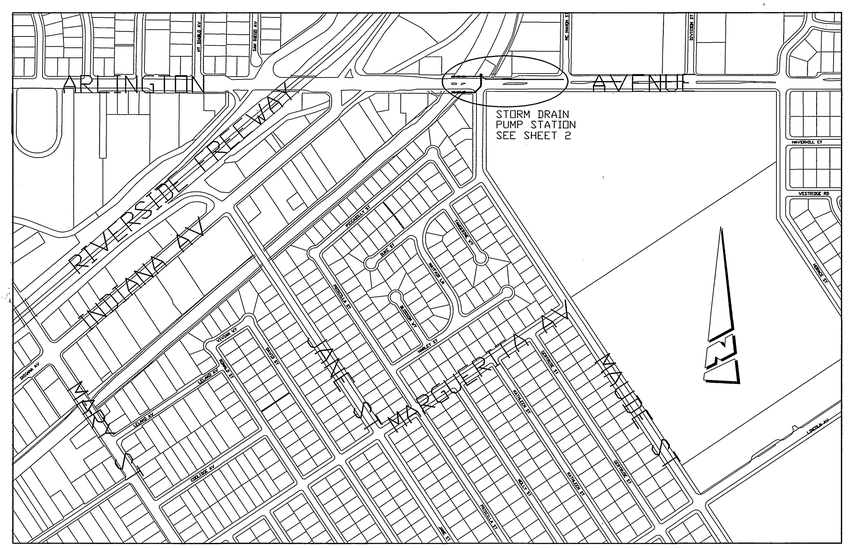

PROJECT LOCATION PLAN

50 m 100 m 200 m 300 m 400 m 500 m 600 m

SCALE - 1:5000

EXISTING UNDERGROUND UTILITIES:

SANITARY SEWER	8"S	TELEPHONE CONDUIT	T
WATER LINE	6"W	ELECTRICAL CONDUIT	E
STORM DRAIN	24"SD	ELECTROLIER LIGHTING CONDUIT	ELC
GAS LINE	3"G	TRAFFIC SIGNAL	SIG
ABANDONED UTILITY	4"C(ABANDD.)	FIRE ALARM	F

EXISTING TOPOGRAPHY:

BLOCK WALL
BOARD FENCE
WIRE FENCE
CHAIN LINK FENCE
TOP OF SLOPE
TOE OF SLOPE
DIRECTION OF FLOW

SANITARY SEWER M.H.
SANITARY SEWER CLEANOUT
STORM DRAIN M.H.
IRRIGATION MERP
WATER M.H.
G&S M.H.
ELECTRIC M.H.
TELEPHONE M.H.
WATER METER
FIRE HYDRANT
SPRINKLER HEAD
VALVE
AIR VALVE
AIR VENT
BUS STOP SIGN
BLOW-OFF VALVE
IRRIGATION STAND PIPE
CONCRETE
ASPHALT
BUILDING
EDGE OF PAVEMENT
POLE & GUY ANCHOR
POWER POLE
TELEPHONE POLE
TELEPHONE RISER
JOINT USE POLE
PULL BOX
TRAFFIC SIGN
PARKING METER
FIRE ALARM BOX
STREET NAME SIGN
GAS METER
MAIL BOX
FAUCET
WALK-DON'T WALK PEDESTRIAN SIGNAL
ELECTROLYSIS TEST STATION
WHEEL STOP
A.C. BERM
CALTRANS ACCESS CONTROL
PEDESTRIAN PUSH BUTTON
RAILROAD TRACKS
RAILROAD SIGN
RAILROAD SIGNAL
TRAFFIC SIGNAL
TRAFFIC SIGNAL ON MAST ARM
TRAFFIC SIGNAL CONTROLLER
TRAFFIC SIGNAL PRESSURE DETECTOR
TRAFFIC SIGNAL LOOP DETECTOR
STREET LIGHT & TRAFFIC SIGNAL ON MAST ARM
STREET LIGHT (UPRIGHT)
STREET LIGHT ON MAST ARM
STEEL POST
WOOD POST

ABBREVIATIONS

A	AMPERE
C/B	CIRCUIT BREAKER
GEN	GENERATOR
GFI	GROUND FAULT INTERRUPT
GPM	GALLONS PER MINUTE
P	PHASE
PLC	PROGRAMABLE LOGIC CONTROLLER
RPM	REVOLUTIONS PER MINUTE
RTU	REMOTE TERMINAL UNIT
SCADA	SUPERVISORY CONTROL AND DATA ACQUISITION
TDH	TOTAL DYNAMIC HEAD
V	VOLT

SH. 1 COVER SHEET
SH. 2 ARLINGTON AVENUE FORCE MAIN- PLAN AND PROFILE
SH. 3 PUMP STATION DETAILS AND SECTION VIEWS
SH. 4 PUMP STATION WIRING DIAGRAM AND NOTES

BENCHMARK
N&T IN SE'LY CURB RETURN
ARLINGTON AVE. @ MAUDE ST.
PER LL41/92

ELEVATION 264.789 m

IMPORTANT NOTICE
Section 4216/4217 of the Government Code requires a Dig Alert Identification be made 2 to 14 days before you dig. "Permit to Excavate" will be valid for your Dig Alert I.D. Number call
CALL TOLL FREE
48 HOURS BEFORE YOU DIG
UNDERGROUND SERVICE ALERT
1-800-422-4133

ENGINEER IN RESPONSIBLE CHARGE
PHILIP L. HANNAWI
R.C.E. No. 44747 Expires 3/31/2002
DATE 5/5/98

REGISTERED PROFESSIONAL ENGINEER — PHILIP L. HANNAWI — No. 44747 — Exp. 3-31-2002 — CIVIL — STATE OF CALIFORNIA

MARK	REVISIONS	APPR.	DATE

DESIGNED BY RVZ DRAWN BY RVZ CHECKED BY

CITY OF RIVERSIDE, CALIFORNIA
PUBLIC WORKS DEPARTMENT

APPROVED BY	BY	DATE
DEPUTY P.W. DIRECTOR		
PRINCIPAL ENGINEER		5/6/98
~~CHIEF P.W. INSPECTOR~~		
TRAFFIC DIVISION		
SURVEYOR		5/6/98
STREET DIVISION		5/7/98
~~PARKS DEPARTMENT~~		

APPROVED BY R. McGrath
PUBLIC WORKS DIRECTOR
DATE 5-7-98

ARLINGTON AVENUE UNDERPASS STORM DRAIN

ACCOUNT NUMBER 230-541500-440223-30268

D-642

SHEET 1 OF 4

SCALE - HORIZONTAL ----, VERTICAL ----

FILE NO. :

AS-BUILT 9-7-2000 LFH

INDEXED 9-7-2000 LFH

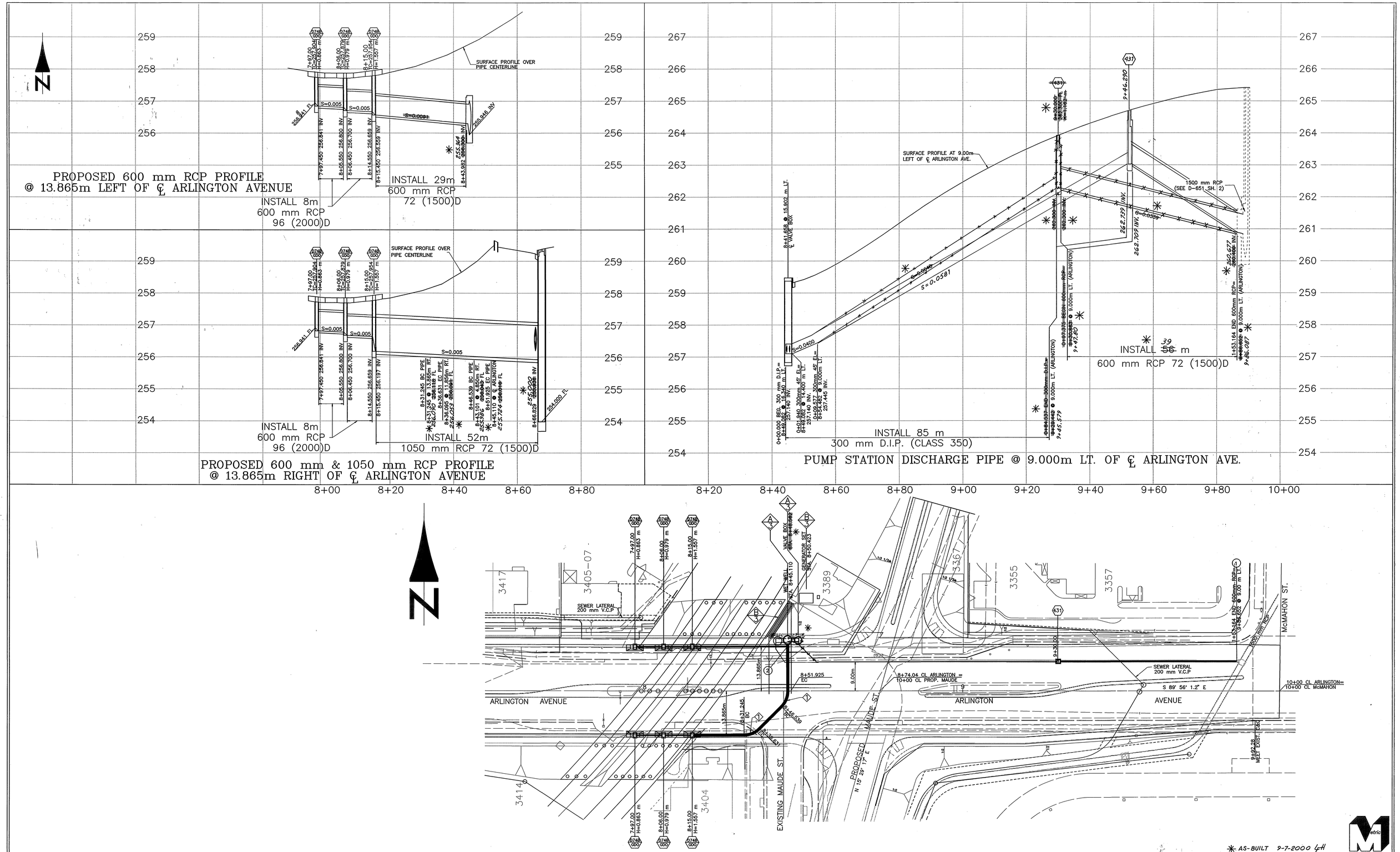

CURVE DATA				
◇	△	R (m)	L (m)	T (m)
1	45° 0' 0"	6.858	5.386	2.841

ENGINEER IN RESPONSIBLE CHARGE
PHILIP L. HANNAWI
R.C.E. No. 44747 Expires 3/31/2002
DATE 5/5/98

REGISTERED PROFESSIONAL ENGINEER PHILIP L. HANNAWI No. 44747 Exp. 3-31-2002 CIVIL STATE OF CALIFORNIA

MARK	REVISIONS	APPR.	DATE

DESIGNED BY RVZ DRAWN BY RVZ CHECKED BY

CITY OF RIVERSIDE, CALIFORNIA
PUBLIC WORKS DEPARTMENT

APPROVED BY	BY	DATE
DEPUTY P.W. DIRECTOR		
PRINCIPAL ENGINEER		5/6/98
CHIEF P.W. INSPECTOR		
TRAFFIC DIVISION		
SURVEYOR		
STREET DIVISION		5/5
PARKS DEPARTMENT		

APPROVED BY R. M. Grech
PUBLIC WORKS DIRECTOR
DATE 5-7-98

ARLINGTON AVENUE UNDERPASS STORM DRAINS

SCALE – HORIZONTAL 1:500, VERTICAL 1:50

ACCOUNT NUMBER 230-541500-440223-30268

D-642

SHEET 2 OF 4

FILE NO. :

✳ AS-BUILT 9-7-2000 LH

INDEXED 9-7-2000 LH

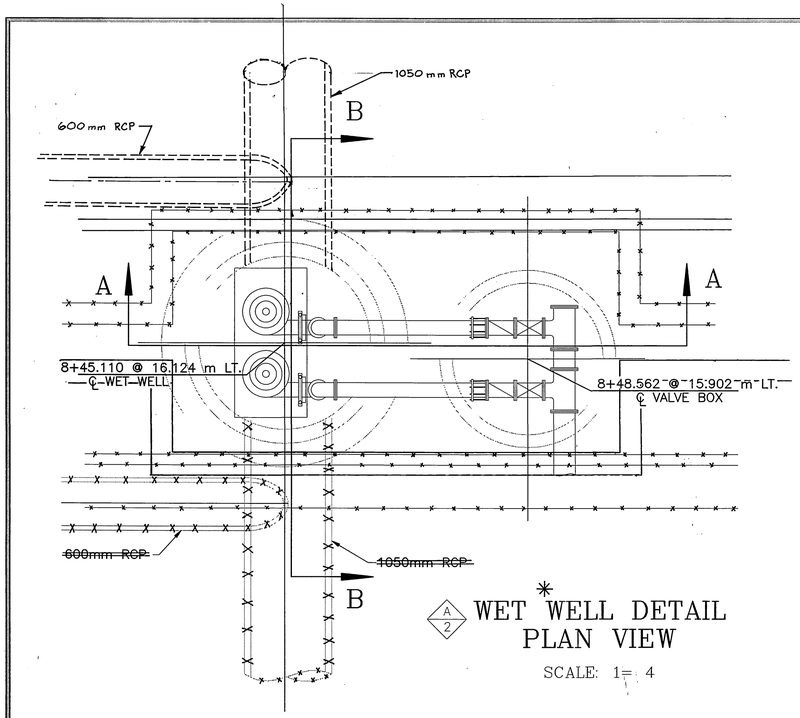

A/2 * WET WELL DETAIL PLAN VIEW

SCALE: 1= 4

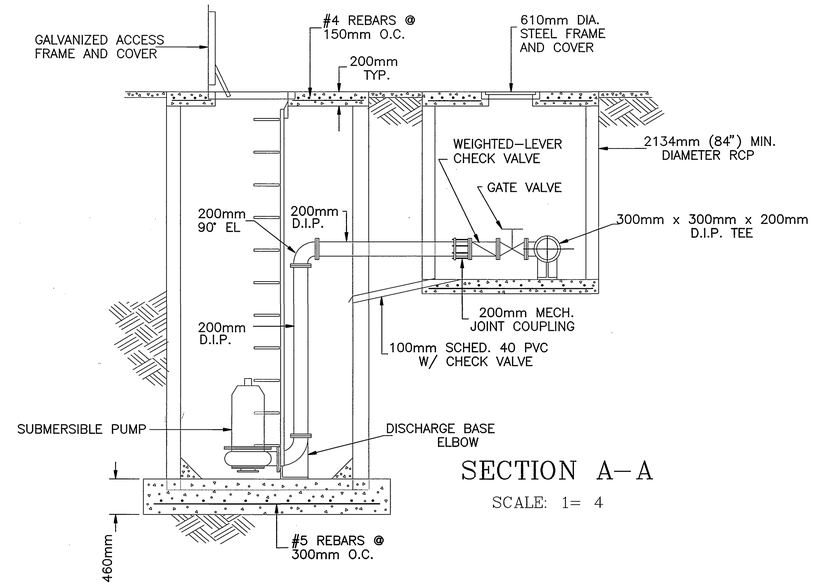

SECTION A–A

SCALE: 1= 4

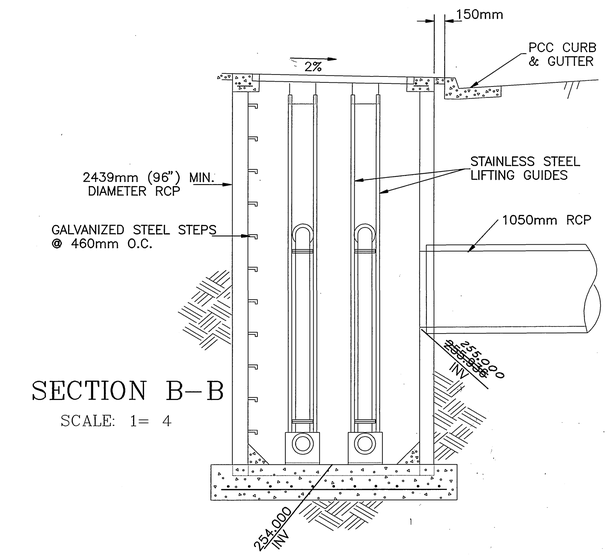

SECTION B–B

SCALE: 1= 4

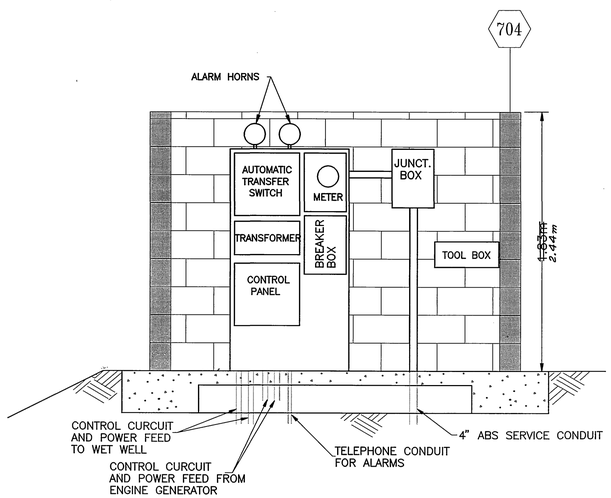

SECTION C–C

SCALE: 1= 20

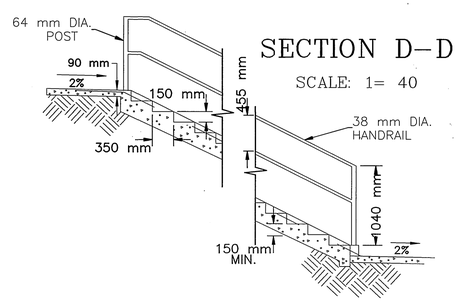

SECTION D–D

SCALE: 1= 40

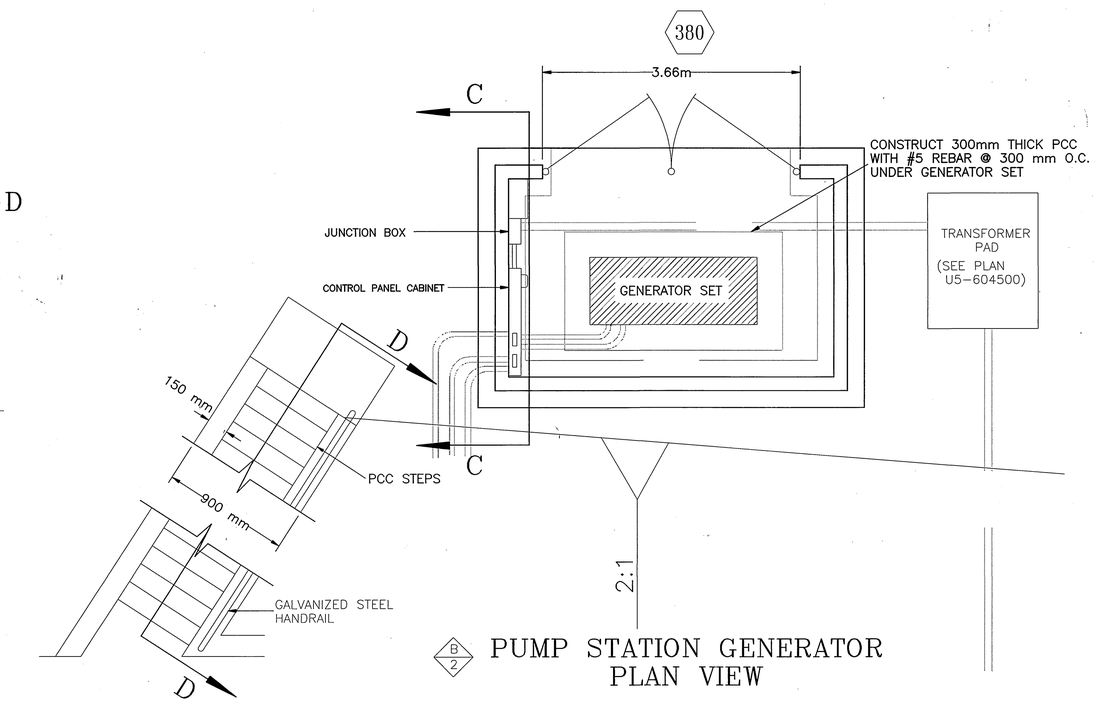

B/2 PUMP STATION GENERATOR PLAN VIEW

SCALE: 1= 40

PUMP DESIGN DATA

VERTICAL SUBMERSIBLE 8" NON-CLOG PUMP AND MOTOR.
PUMP SHALL BE CAPABLE OF PROVIDING THE FOLLOWING HYDRALIC CONDITIONS:
1,800 G.P.M. @ 31' T.D.H. TO 3,600 G.P.M. @ 40' T.D.H., 70% MINIMUM
EFFICIENCY @ 1,150 R.P.M.. MOTOR SHALL BE A 3 PHASE, 60 HERTZ, 460 VOLT
UNIT DEVELOPING A MAXIMUM OF 60 H.P..

ENGINEER IN RESPONSIBLE CHARGE

PHILIP L. HANNAWI
R.C.E. No. 44747 Expires 3/31/2002
DATE 5/5/98

REGISTERED PROFESSIONAL ENGINEER — PHILIP L. HANNAWI — No. 44747 — Exp. 3-31-2002 — CIVIL — STATE OF CALIFORNIA

MARK	REVISIONS	APPR.	DATE

DESIGNED BY RVZ DRAWN BY RVZ CHECKED BY

CITY OF RIVERSIDE, CALIFORNIA
PUBLIC WORKS DEPARTMENT

APPROVED BY	BY	DATE
DEPUTY P.W. DIRECTOR		
PRINCIPAL ENGINEER		6/6/98
CHIEF P.W. INSPECTOR		
TRAFFIC DIVISION		
SURVEYOR		7/22/98
STREET DIVISION		
PARKS DEPARTMENT		

APPROVED BY R. McGrath
PUBLIC WORKS DIRECTOR
DATE 5-7-98

ARLINGTON AVENUE UNDERPASS STORM DRAINS

SCALE – HORIZONTAL 1:500, VERTICAL 1:50

ACCOUNT NUMBER 230-541500-440223-30268

D-642

SHEET 3 OF 4

FILE NO. :

* AS-BUILT 9-7-2000 4H

INDEXED 9-7-2000 4H

PUMP STATION NOTES

GENERAL NOTES

1. THE CONTRACTOR SHALL SUBMIT COMPLETE MAINTENANCE AND SPARE PARTS INFORMATION FOR THE PUMPS, VALVES ELECTRICAL AND INSTRUMENTATION COMPONENTS. MECHANICAL COMPONENTS MUST HAVE SECTION VIEWS, EXPLODED VIEWS, AND A COMPLETE PARTS LISTING. THE NAME, ADDRESS AND TELEPHONE NUMBER FOR ALL SUPPLIERS MUST BE PROVIDED AND NOTED ON THE PLANS.
2. THE CONTRACTOR MUST PROVIDE A 6 m (20') JUMPER FROM THE CONTROL PANEL TO THE GENERATOR FOR EMERGENCY POWER CONNECTION.
3. CONTRACTOR MUST PROVIDE COMPLETE AS-BUILT DRAWINGS OF THE ELECTRICAL SYSTEM. THIS INCLUDES THE GENERAL WIRING OF THE PANELS. THE CITY REVIEW AND APPROVE THE DRAWINGS. THE CONTRACTOR SHALL MAKE ANY CHANGES AND SUBMIT FINAL SETS. COMPLETED RECORDED DRAWINGS ARE REQUIRED BEFORE FINAL PAYMENT IS RECEIVED BY THE CONTRACTOR.
4. ALL WIRES MUST BE INDIVIDUALLY TAGGED. THEY MUST BE TAGGED AT EVERY TERMINATION AND INSIDE EVERY JUNCTION BOX. WIRE NUMBERING AND TAGGING SYSTEMS MUST BE SUBMITTED TO THE CITY FOR REVIEW AND APPROVAL.
5. THREE PHASE WIRE IS REQUIRED FOR PUMP STATION (480 VOLT).
6. THE PUMP MOTORS MUST BE SIZED NOT TO EXCEED THEIR RATED HORSEPOWER AT ANY POINT ON THE PUMP CURVE.

INSTRUMENTATION AND CONTROL NOTES

1. CONTROL PANEL MUST BE CUSTOM BUILT TO THE CITY REQUIREMENTS.
2. CONTRACTOR MUST SUBMIT ALL WIRING DIAGRAMS FOR REVIEW BY THE CITY PRIOR TO ASSEMBLY.
3. CONTRACTOR MUST PROVIDE THE CITY THE OPPORTUNITY TO INSPECT THE PANEL DURING ASSEMBLY.
4. PUMPS SHALL BE CONTROLLED USING A SQUARE D PLC. NO SUBSTITUTIONS. THIS IS REQUIRED FOR STANDARDIZATION.
5. CONTRACTOR MUST SUBMIT A COPY OF THE PLC PROGRAM FOR REVIEW AND APPROVAL. A FINAL FULLY ANNOTATED PROGRAM MUST BE PROVIDED WITH THE AS-BUILT DRAWINGS.
6. WET WELL LEVEL MUST BE MONITORED WITH AN ULTRASONIC LEVEL METER. THE UNIT MUST BE FULLY COMPATIBLE WITH MILTRONIC MULTIRANGER UNITS. THIS IS REQUIRED FOR STANDARDIZATION.
7. THE PUMP STATION SHALL BE EQUIPPED WITH ULTRASONIC FAILURE INDICATOR.
8. THE CONTROL PANEL SHALL BE EQUIPPED WITH ACROSS THE LINE STARTING SO THE PUMPS CAN BE OPERATED MANUALLY IN THE EVENT OF PLC OR OTHER EQUIPMENT FAILURE.
9. CONTROL PANEL MUST BE EQUIPPED WITH A REMOTE TERMINAL UNIT. IT MUST BE FULLY COMPATIBLE WITH MOTOROLA INTRAC 200 UNITS. THIS IS REQUIRED FOR STANDARDIZATION. THE RTU WILL COMMINICATE WITH THE INTRAC BASE STATION AT THE CITY RECLAMATION PLANT.
10. THE CONTRACTOR MUST CONNECT AND TEST RTU TO ESTABLISH COMMUNICATION WITH PLANT BASE. CITY WILL INTEGRATE RTU INTO PLANT SCADA CONTROL SYSTEM.

CONTROL LOGIC NOTES

THE PLC WILL PERFORM THE FOLLOWING CONTROL FUNCTIONS:

1. CYCLE PUMPS ON AND OFF ACCORDING TO WET WELL LEVEL.
2. ALTERNATE LEAD AND LAG PUMPS EVERY 24-HOURS.
3. RECORD PUMP LAPSED TIME RUN HOURS.
4. PROVIDE LOW LEVEL AND HIGH LEVEL ALARMS.
5. TURN OFF PUMPS ON SEAL FAILURE.
6. TURN OFF PUMPS ON THERMAL OVERLOAD.
7. CALL LAG PUMP IN EVENT OF LEAD PUMP FAILURE.
8. RECOGNIZE ULTRASONIC LEVEL CONTROL SYSTEM FAILURE AND CLOSE ALARM CONTACT.
9. RECOGNIZE PUMP HAND SWITCH POSITION AND ADJUST CONTROL LOGIC.
10. RECOGNIZE ANY FAILURE CONDITION AND CLOSE BEACON LIGHT CONTACT.
11. RECOGNIZE POWER FAILURE AND CLOSE ALARM CONTACT.
12. RECOGNIZE SITE ENTRIES AND CLOSE ALARM CONTACT.
13. LEVEL CONTROLLERS SHALL PROVIDE BACKUP PUMP CONTROL IN THE EVENT OF PLC FAILURE.
14. ALL ALARM CONTACTS AND SIGNALS TO THE RTU SHALL BE CONTOLLED BY THE PLC.

PUMP DESIGN DATA

VERTICAL SUBMERSIBLE 8" NON-CLOG PUMP AND MOTOR.
PUMP SHALL BE CAPABLE OF PROVIDING THE FOLLOWING HYDRALIC CONDITIONS:
1,800 G.P.M. @ 31' T.D.H. TO 3,600 G.P.M. @ 40' T.D.H., 70% MINIMUM EFFICIENCY @ 1,150 R.P.M.. MOTOR SHALL BE A 3 PHASE, 60 HERTZ, 460 VOLT UNIT DEVELOPING A MAXIMUM OF 60 H.P..

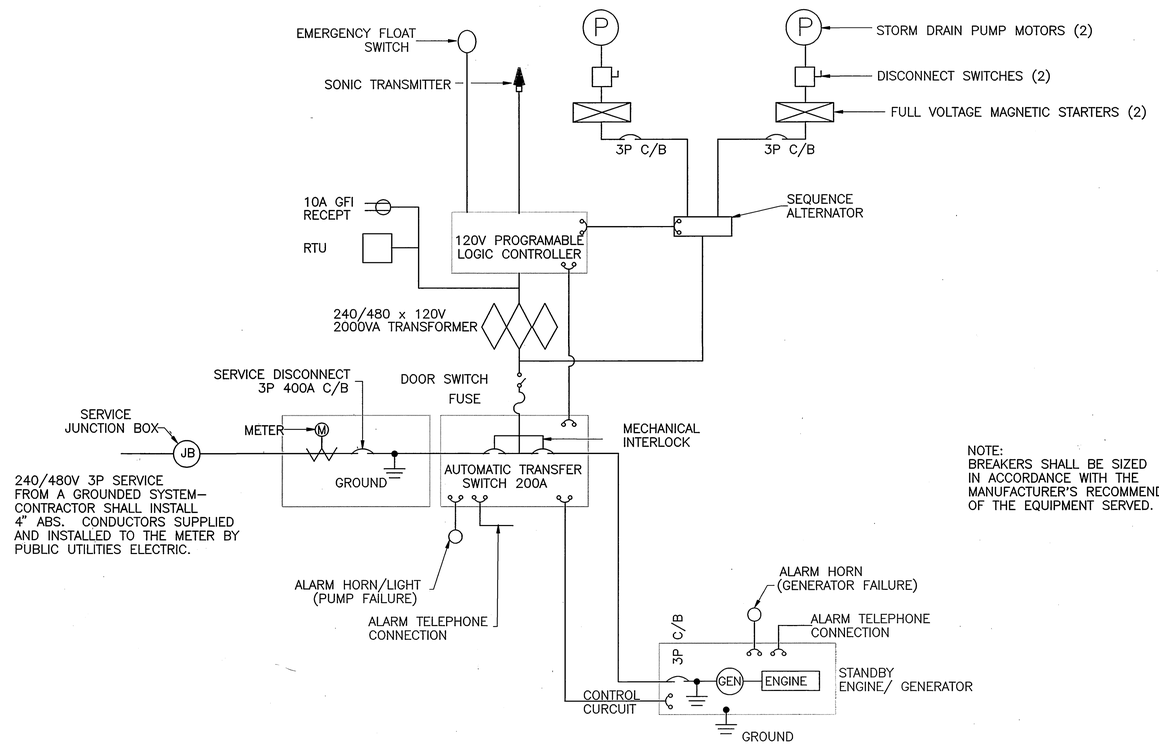

NOTE:
BREAKERS SHALL BE SIZED IN ACCORDANCE WITH THE MANUFACTURER'S RECOMMENDATIONS OF THE EQUIPMENT SERVED.

PUMP STATION SCHEMATIC WIRING DIAGRAM

* AS-BUILT 9-7-2000 LH

ENGINEER IN RESPONSIBLE CHARGE
PHILIP L. HANNAWI
R.C.E. No. 44747 Expires 3/31/2002
DATE 5/5/99

REGISTERED PROFESSIONAL ENGINEER PHILIP L. HANNAWI No. 44747 Exp. 3-31-2002 CIVIL STATE OF CALIFORNIA

MARK	REVISIONS	APPR.	DATE

DESIGNED BY RVZ DRAWN BY RVZ CHECKED BY

CITY OF RIVERSIDE, CALIFORNIA
PUBLIC WORKS DEPARTMENT

APPROVED BY	BY	DATE
DEPUTY P.W. DIRECTOR		
PRINCIPAL ENGINEER		5/6/99
CHIEF P.W. INSPECTOR	—	—
TRAFFIC DIVISION	—	—
SURVEYOR	—	—
STREET DIVISION		5/13
PARKS DEPARTMENT	—	—

APPROVED BY R. McGrath
PUBLIC WORKS DIRECTOR
DATE 5-7-99

ARLINGTON AVENUE UNDERPASS STORM DRAINS

SCALE - HORIZONTAL 1:500, VERTICAL 1:50

ACCOUNT NUMBER 230-541500-440223-30268

D-642

SHEET 4 OF 4

FILE NO. :

INDEXED 9-7-2000 LH