PLATE 1 - PLAN - PROFILE O.P.R.&R.E. STANDARD
KEUFFEL & ESSER CO., NEW YORK.
K & E CO. NO. 347-IR ALBANENE 1961 TRACING PAPER MADE IN U.S.A. 24529

PROFILE
NOTE BOOK
NO.
SURVEYED
PLOTTED
GRADES CHECKED
B. M.'S NOTED
STRUCTURE NOTAT'NS CH'KD
BY
DATE

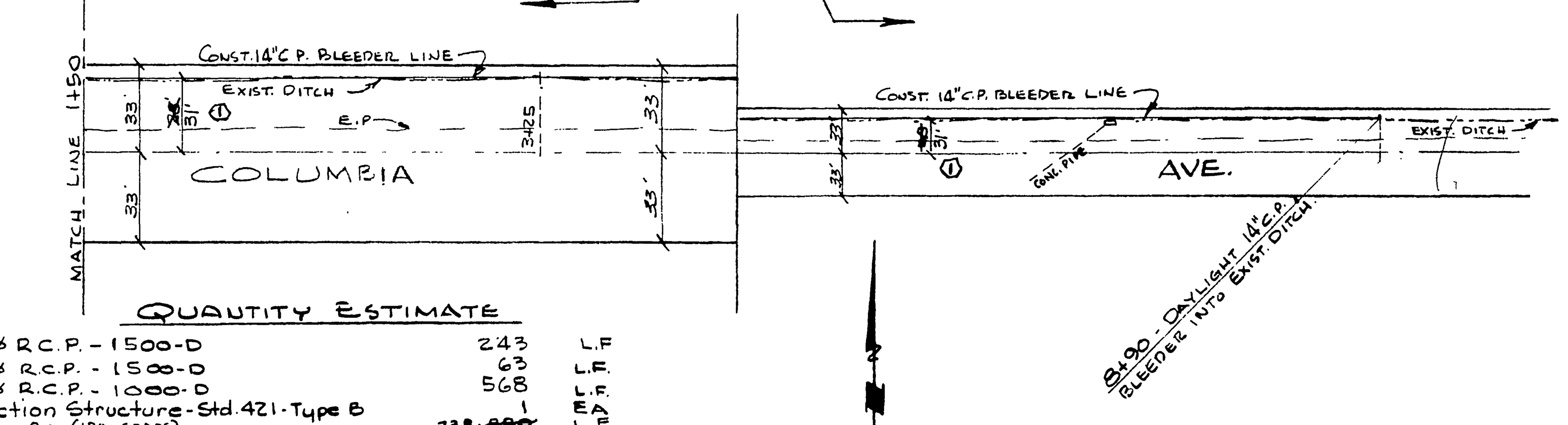

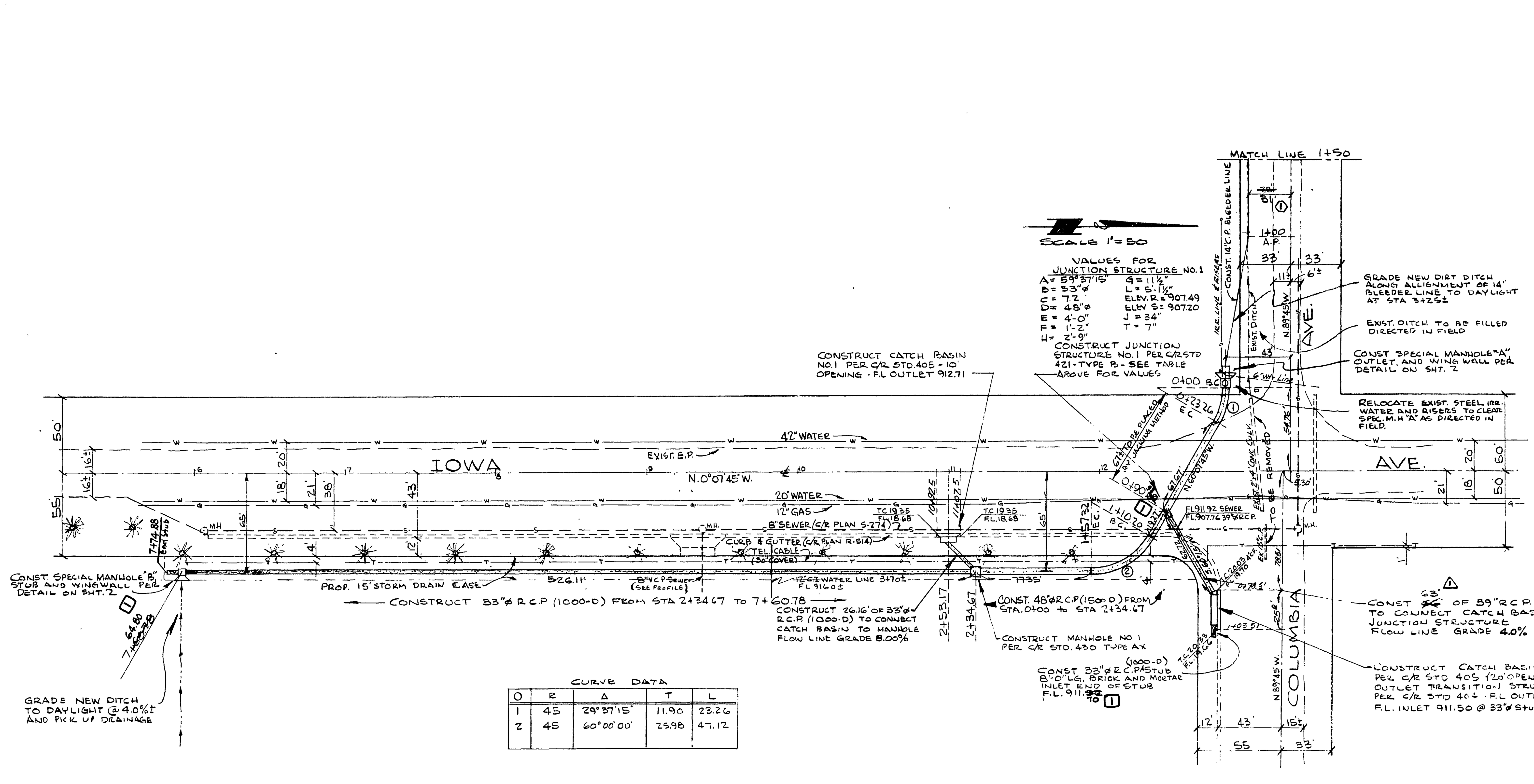

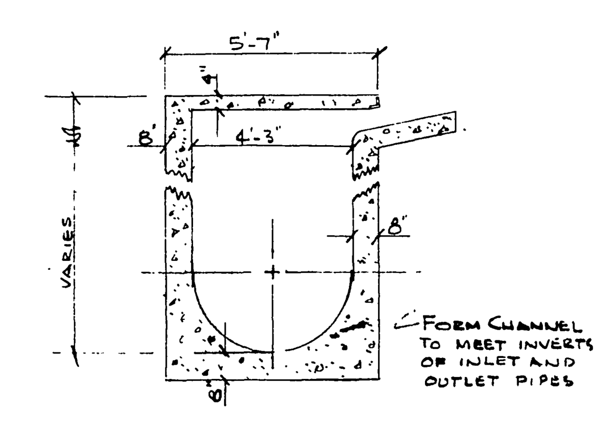

CROSS SECTION OF CATCH BASIN No 2
SCALE ¼" = 1'-0"

QUANTITY ESTIMATE

48" Ø R.C.P. - 1500-D	243	L.F.
39" Ø R.C.P. - 1500-D	63	L.F.
33" Ø R.C.P. - 1000-D	568	L.F.
Junction Structure - Std. 421 - Type B	1	EA
14" Conc. Pipe (IRR. GRADE)	738 ~~880~~	L.F.
Manhole AX - Std. 430	1	EA
Catch Basin No 1 - Std. 405 Type 3 (10' OPENING)	1	EA
Special Manhole "A" (Per Det. on Sht. 2)	1	EA.
Catch Basin No. 2 - Std. 405 - Type 3 (20' OPENING)	1	EA.
Special Manhole "B" (Per Det. on Sht. 2)	1	EA.
Transition Outlet Structure - Std 404	1	EA.
Wing Wall - Per Det. on Sht. 2	1	EA.
Remove Existing Drainage Structures (As Noted on Plan)		L.S.
RELOCATE IRRIG LINE & RISERS		L.S.

NOTES:

1. PRIOR TO RELEASE OF CUT SHEETS CONTRACTOR IS TO EXPOSE TOP OF 42" WATER LINE AND NOTIFY ENGINEER FOR VERIFICATION OF ELEVATION.
2. ALL PIPE TO BE BEDDED PER CLASS III BEDDING AS SHOWN ON CITY OF RIV. STD. DWG. NO. 452. THIS DOES NOT APPLY JACKED PORTION.
3. CONTRACTOR SHALL CONTACT PUBLIC UTILITIES DEPT. PRIOR TO JACKING.

PLAN
NOTE BOOK
NO.
SURVEYED
PLOTTED
ALIGNMENT CHECKED
RT. OF WAY CHECKED
BY
DATE

ALBERT A. WEBB ASSOCIATES
CIVIL ENGINEERS - RIVERSIDE, CALIFORNIA
APPROVED Ernest N. Webb R.E. 9876 DATE 9-1-61

REVISION

MARK	DATE	DESCRIPTION
△	9-28-61	Change 66' of 39" to read 63' dw Wdg 12/13/61
①	11/12/61	
⓵	12/27/61	Shortened pipe & added cut-off wall & moved pipe to 31' offset. ptd dw Wdg

CITY OF RIVERSIDE, CALIFORNIA
DEPARTMENT OF PUBLIC WORKS

COLUMBIA AVE STORM DRAIN
IOWA AVENUE SOUTHERLY FROM COLUMBIA AVE.

DATE MAR. 1961	SCALE HORIZ. 1" = 50' VERT. 1" = 5'	APPROVED BY [signature] DIRECTOR OF PUBLIC WORKS	NO. D-71
DRAWN dw	W.O. 61-31		
CHECKED Wdg	F.B. 338/54 428/40	DATE 9-18-61	SHEET 1 OF 2

INDEXED

DWG. No 61-31 D

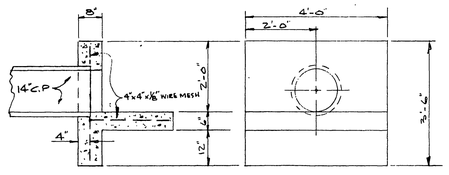

① CUT-OFF WALL
SCALE ½"=1'-0"

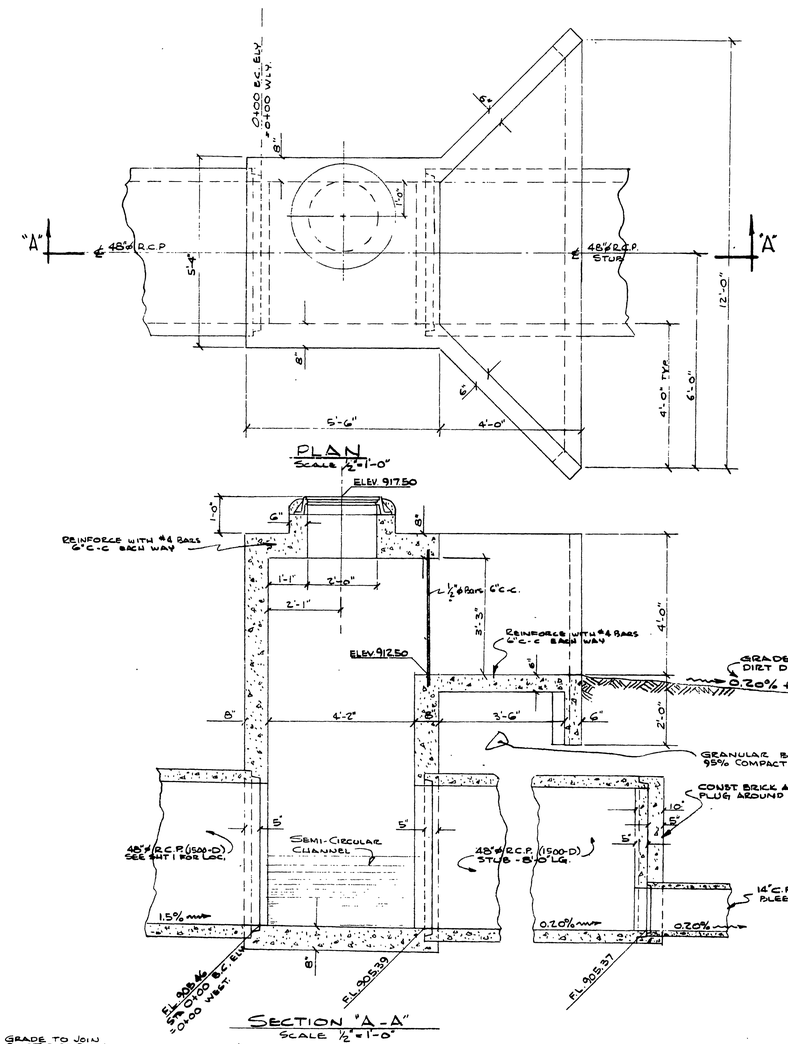

SPECIAL MANHOLE "A"

NOTE: DESIGN AND CONSTRUCTION OF THIS SPECIAL MANHOLE IS TO BE BASED ON CITY OF RIVERSIDE STD. DWG. No. 420, MANHOLE AX, WITH ONLY VARIATION BEING THE ADDITION OF THE UPPER OUTLET AND WING WALLS.

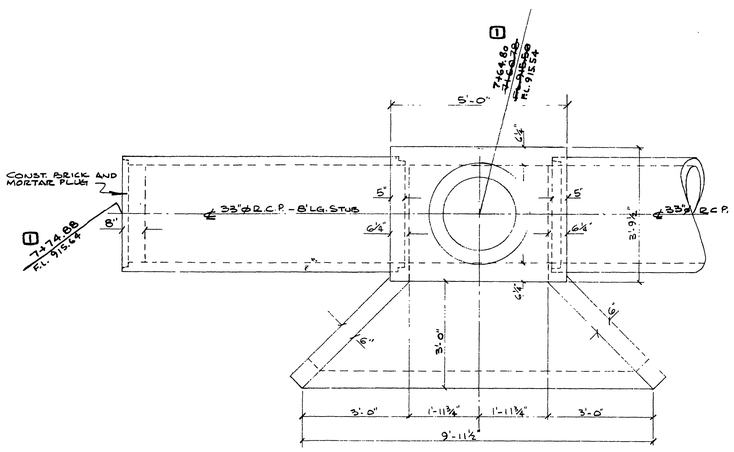

PLAN
Scale ½"=1'-0"

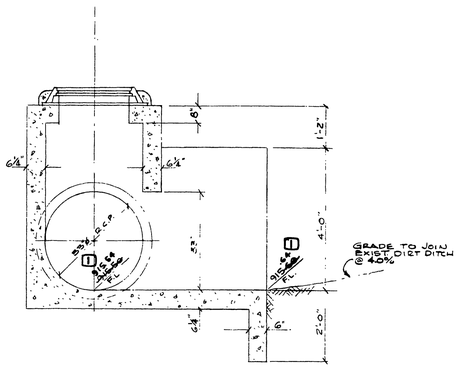

SECTION "A-A"
Scale ½"=1'-0"

SPECIAL MANHOLE "B"

NOTE: DESIGN AND CONSTRUCTION OF THIS SPECIAL MANHOLE IS TO BE BASED ON CITY OF RIVERSIDE STD. DWG. NO 420, MANHOLE AX, WITH ONLY VARIATION BEING ADDITION OF WING WALLS.

ALBERT A. WEBB ASSOCIATES
CIVIL ENGINEERS · RIVERSIDE, CALIFORNIA
APPROVED [signature] DATE 9-1-61
R.E. 9876

REVISION		
MARK	DATE	DESCRIPTION
①	11/12/61	Revised as shown at Mark ① W.O. 12/13/61
①	12/27/61	Added Cut-off Wall - Galt

CITY OF RIVERSIDE, CALIFORNIA
DEPARTMENT OF PUBLIC WORKS

COLUMBIA AVE. STORM DRAIN
DETAIL SHEET

DATE MAR 1961	SCALE As Noted	APPROVED BY [signature] DIRECTOR OF PUBLIC WORKS	NO. D-71
DRAWN dwr	W.O. 61-31		
CHECKED [signature]	F.B. 338 - 42B	DATE 9-18-61	SHEET 2 OF 2

DWG 61-31D
2 each