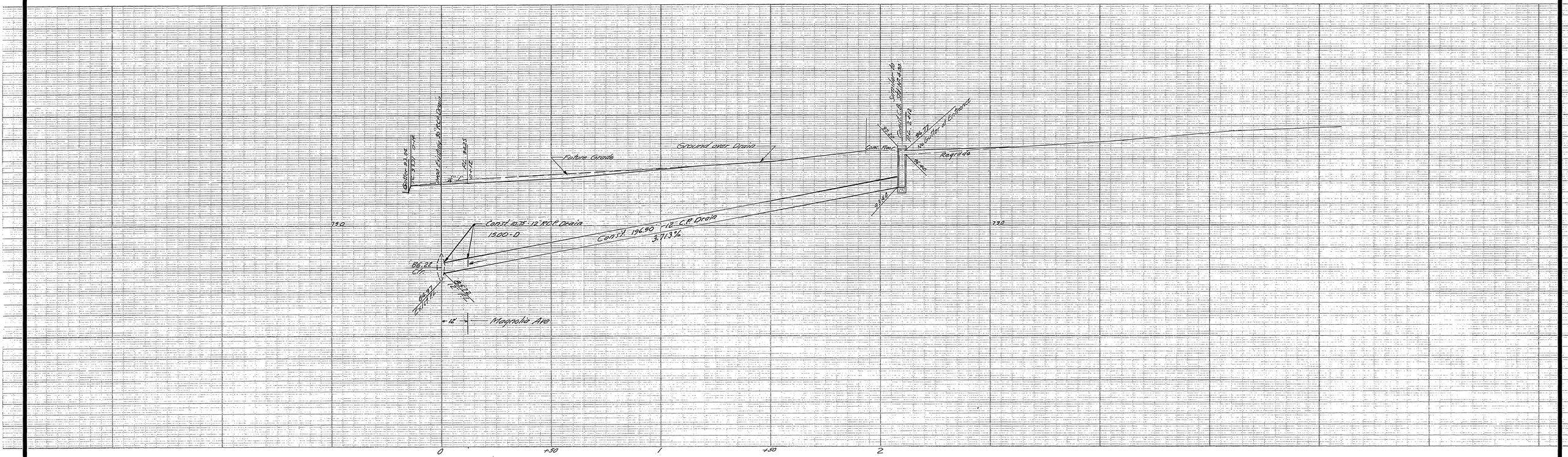

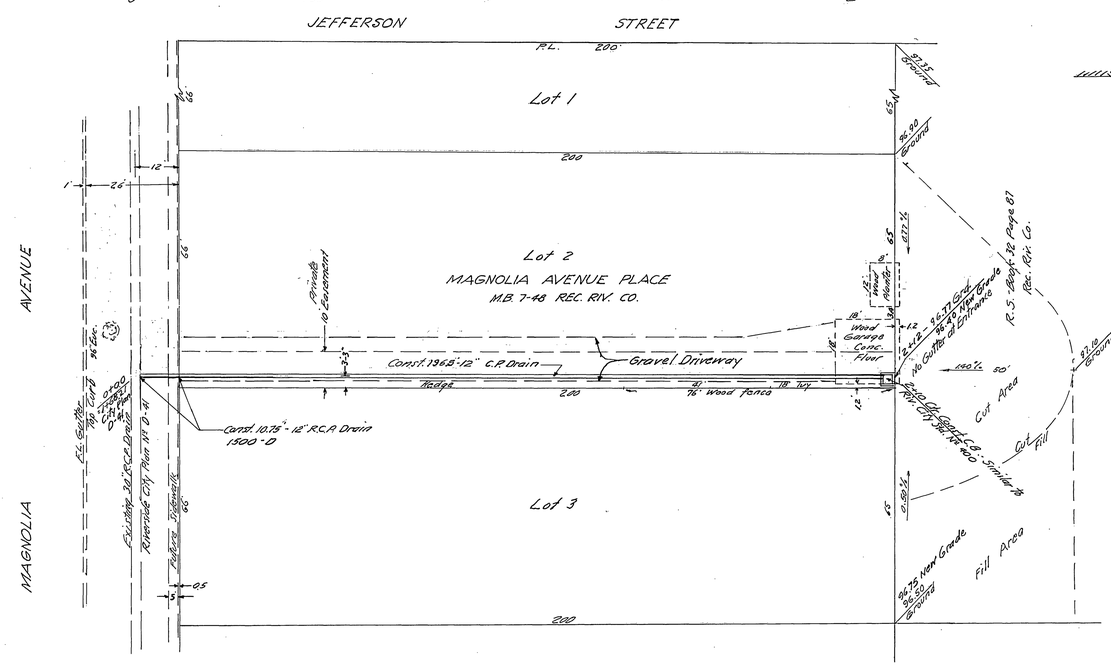

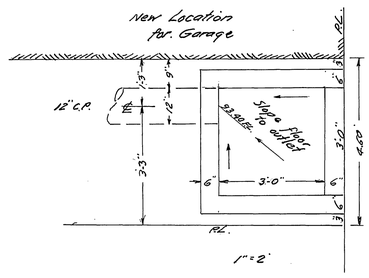

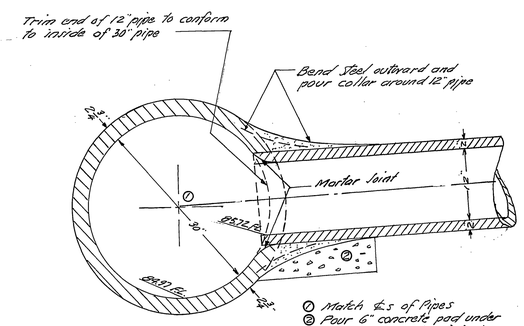

DETAIL OF CONNECTION
Scale: 1" = 1'

WITHIN MAGNOLIA AVENUE

1. Construction shall conform to Spec. 461.
2. Bedding Case II, Riv. Std. 452

NOTE: Approval by the Director of Public Works is for that portion within Magnolia Avenue only.

B.M. Spike & Lead in N.W. Curb Ref. at Jefferson St. and California Ave. Elev. = 771.47
City Plan No. D-41 Sheet 2

REVISIONS

MARK	DATE	DESCRIPTION

DESIGNED BY
DRAWN BY
CHECKED BY D.R.B.
RECOMMENDED BY O.R. Thiel
ASSISTANT CITY ENGINEER

F.B. 750-13

J. F. DAVIDSON-CIVIL ENGINEER
R.E. NO. 662
RIVERSIDE, CALIFORNIA
APPROVED BY J. F. Davidson DATE 11-6-61

CITY OF RIVERSIDE, CALIFORNIA
DEPARTMENT OF PUBLIC WORKS

STORM DRAIN PLAN & PROFILE FOR R.S. No 570 - ON LOT 2 - MAGNOLIA AVE. PLACE AND 168.75' WESTERLY ON MAGNOLIA AVE. FROM THE ℄ OF JEFFERSON STREET.

HORIZ. SCALE 1" = 20' VERT. SCALE 1" = 4'

APPROVED BY
Director of Public Works
(See Note above)
DATE 12-5-61

NO. D-72

SHEET 1 / 1

JUDGED

2174