RIVERSIDE CALIFORNIA

CITY OF RIVERSIDE

PUBLIC WORKS DEPARTMENT
JURUPA AVENUE EXTENSION
PHASE 2
FROM RUTLAND AVE. TO THE HOLE CULVERT CROSSING

SPECIFIC CONSTRUCTION NOTES

- (hexagon) NUMBERS ABOVE 100 IN A HEXAGON ON THE PLAN REFER TO THE RESPECTIVE STANDARD DRAWING AND SHALL BE CONSTRUCTED ACCORDINGLY. UNLESS MODIFICATIONS ARE NOTED ON THE PLAN OR COVER SHEET. ANY NUMBER SHOWN BELOW THE STANDARD DRAWING NUMBER INDICATES THE SPECIFIC ALTERNATE TO BE CONSTRUCTED.
- R.C.B. 12'X7' — INSTALL 12'X7' REINFORCED CONCRETE BOX CULVERT (JENSEN PRECAST) BEDDING PER THE RECOMMENDATIONS OF THE MANUFACTURER AND THE GEOTECHNICAL REPORT DATED APRIL 7, 2009 BY MEDALL, ARAGON GEOTECHNICAL INC., AND THE ADDENDUM DATED MARCH__, 2011.
- JOIN R.C.B. — JOIN R.C.P. TO R.C.B. PER THE AMERICAN PUBLIC WORKS ASSOCIATION STANDARD 333-1 AS SHOWN ON SHEET 2. ALL CONSTRUCTION SHALL COMPLY WITH APWA SPECIFICATIONS.
- R.C.P. Ø= — INSTALL REINFORCED CONCRETE PIPE SIZE AS INDICATED
- BASIN W= — INSTALL CATCH BASIN PER CITY OF RIVERSIDE STD. DWG 405 WIDTH AND DEPTH PER PLAN
- RIP RAP — INSTALL RIP RAP PAD 1/2 TON ROCK AS INDICATED, DIMENSIONS SHOWN ON PLAN, PLACEMENT PER METHOD A PER CALTRANS SPECIFICATIONS SECTION 72-2.03
- RSP — INSTALL ROCK SLOPE PROTECTION PER DETAIL ON SHEET 3. RSP GEOTEXTILE FABRIC TYPE AND METHOD OF ANCHORING AND PLACEMENT PER CALTRANS SPECIFICATIONS SECTIONS 72-2.025 AND 88-1.04. PLACEMENT PER METHOD A OR B.
- WING WALL — CONSTRUCT CONCRETE WING WALL PER CALTRANS STANDARD PLAN D84 WHILE MAINTAINING APPROPRIATE DRAINAGE TOP OF WALL AND FOOTING ELEVATIONS PER PLAN
- REM — REMOVE ITEM AS INDICATED

CONTACT INFORMATION

CITY OF RIVERSIDE PUBLIC UTILITIES ELECTIC.......... RUDY VILLAVICENCIO (951)826-5395
CITY OF RIVERSIDE PUBLIC UTILITIES WATER.............DAVID KRELL (951)826-5434
MEDALL, ARAGON GEOTECHNICAL INC.........................CARLOS F. ARAGON (951)776-0345
VHBC INC. (BIOLOGIST)...VICTOR HORCHAR (951)789-1015
JENSEN PRECAST (CULVERT MANUFACTURER)...........JOHN MERRILL (909)429-4102

GENERAL CONSTRUCTION NOTES

1. CONSTRUCTION SHALL BE IN ACCORDANCE WITH THE CITY OF RIVERSIDE STANDARD DWGS AND STANDARD SPECIFICATIONS FOR PUBLIC WORKS CONSTRUCTION, LATEST EDITION.
2. ALL ELEVATIONS SHOWN ON THE PLAN VIEW SHALL BE STAKED IN THE FIELD.
3. PRIME CONTRACTOR BIDDING THIS WORK SHALL HAVE A CLASS "A" or "C-34" LICENSE.
4. EXISTING UTILITIES SHOWN ON THIS PLAN ARE PLOTTED FROM UTILITY RECORDS. THE CONTRACTOR IS REQUIRED TO TAKE DUE PRECAUTIONARY MEASURES TO LOCATE AND PROTECT ALL UTILITIES WHETHER OR NOT SHOWN ON THIS PLAN. IF THE COVER OF A UTILITY IS KNOWN, IT IS SHOWN IN THE PROFILE. UTILITIES SHOWN IN THE PROFILE AS —?— INDICATES THAT THE COVER IS UNKNOWN, BUT THE UTILITY IS NOT EXPECTED TO CONFLICT WITH THE PROPOSED IMPROVEMENTS.

EXISTING UNDERGROUND & TOPOGRAPHY LEGEND

EXISTING UNDERGROUND UTILITIES:

Utility	Symbol	Utility	Symbol
SANITARY SEWER	8"S	TELEPHONE CONDUIT	T T
WATER LINE	6"W	ELECTRICAL CONDUIT	E E
STORM DRAIN	(double line)	ELECTROLIER LIGHTING CONDUIT	ELC
GAS LINE	3"G	TRAFFIC SIGNAL	SIG SIG
ABANDONDED UTILITY	6"G(ABAN'D.)	FIRE ALARM	F F

EXISTING TOPOGRAPHY:

BLOCK WALL
BOARD FENCE
WIRE FENCE
CHAIN LINK FENCE
TOP OF SLOPE
TOE OF SLOPE
DIRECTION OF FLOW
CENTER LINE ℄
RIGHT-OF-WAY R/W
SUBDIVISION LOT LINE PL

SANITARY SEWER M.H.
SANITARY SEWER CLEANOUT
STORM DRAIN M.H.
IRRIGATION WEIR
WATER M.H.
GAS M.H.
ELECTRIC M.H.
TELEPHONE M.H.
WATER METER
FIRE HYDRANT
SPRINKLER HEAD
VALVE
AIR VALVE
AIR VENT
BUS STOP SIGN
BLOW-OFF VALVE
IRRIGATION STAND PIPE
CONCRETE
ASPHALT
BUILDING
EDGE OF PAVEMENT

POLE & GUY ANCHOR
POWER POLE
TELEPHONE POLE
TELEPHONE RISER
JOINT USE POLE
PULL BOX
TRAFFIC SIGN
PARKING METER
FIRE ALARM BOX
STREET NAME SIGN
GAS METER
MAIL BOX
FAUCET
WALK-DON'T WALK PEDESTRIAN SIGNAL
ELECTROLYSIS TEST STATION
WHEEL STOP
A.C. BERM

PEDESTRIAN PUSH BUTTON
RAILROAD TRACKS
RAILROAD SIGN
RAILROAD SIGNAL
TRAFFIC SIGNAL
TRAFFIC SIGNAL ON MAST ARM
TRAFFIC SIGNAL CONTROLLER
TRAFFIC SIGNAL PRESSURE DETECTOR
TRAFFIC SIGNAL LOOP DETECTOR
STREET LIGHT & TRAFFIC SIGNAL ON MAST ARM
STREET LIGHT (UPRIGHT)
STREET LIGHT ON MAST ARM
STEEL POST
WOOD POST

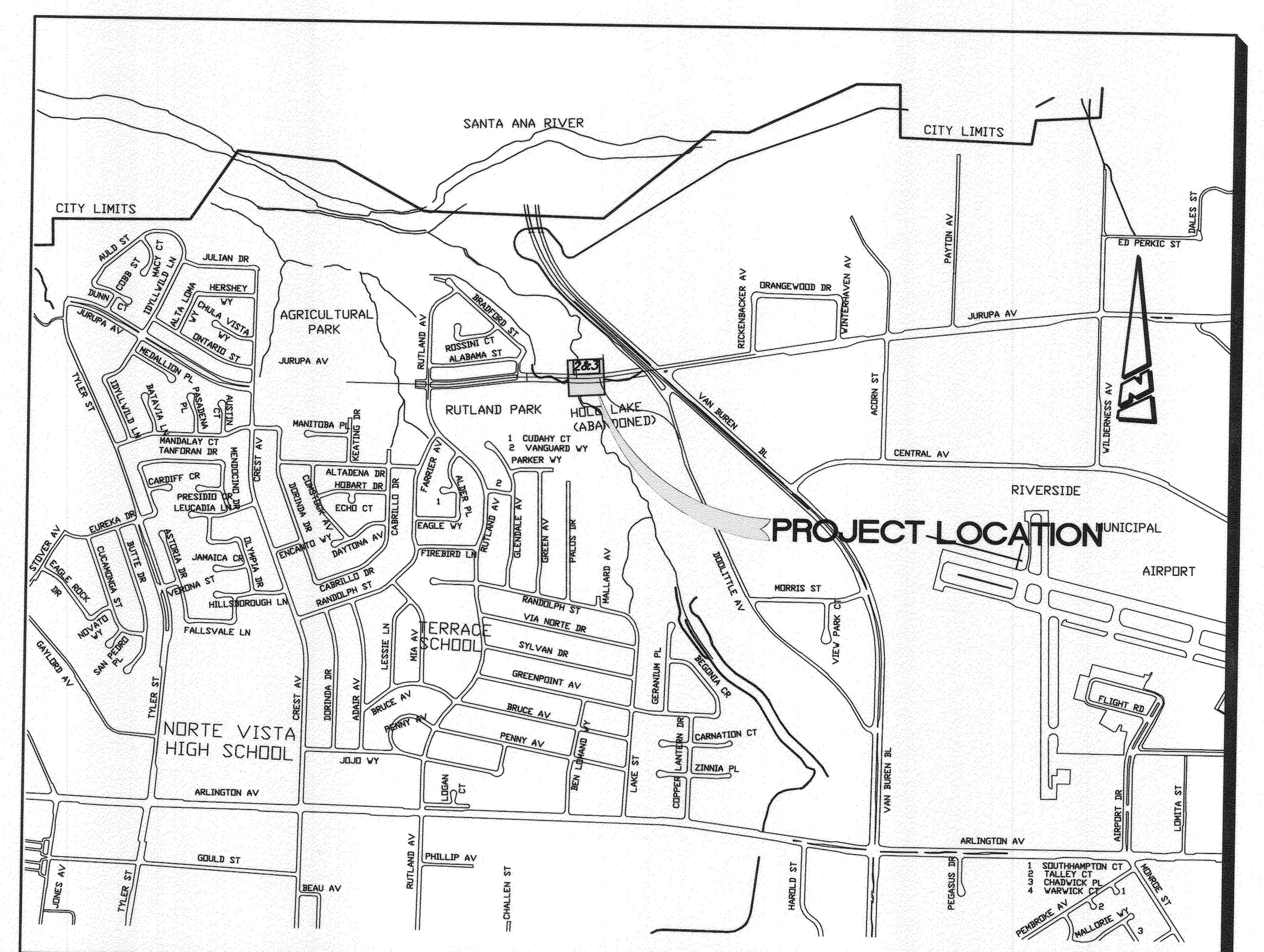

PROJECT LOCATION MAP

0 KM. 0.25 KM 0.5 KM. 1 KM. 1.5 KM.
0' 500' 1,000' 2,000' 3,000' 4,000' 5,000' 6,000'

SCALE: 1" = 1,000'

STORM DRAIN IMPROVEMENT GENERAL NOTES:

1. NO PERSON SHALL PERFORM ANY CONSTRUCTION ACTIVITY OR INSTALL ANY OBJECTS WITHIN THE PUBLIC RIGHTS-OF-WAY OR EASEMENTS OF THE CITY OF RIVERSIDE WITHOUT A VALID CONSTRUCTION PERMIT OR, A STREET OPENING PERMIT OR AN ENCROACHMENT PERMIT ISSUED BY THE CITY'S PUBLIC WORKS DEPARTMENT.
2. IT SHALL BE THE RESPONSIBILITY OF THE CONTRACTOR TO CLEAR THE RIGHT OF WAY IN ACCORDANCE WITH THE PROVISIONS OF LAW AS IT AFFECTS EACH UTILITY INCLUDING IRRIGATION LINES AND APPURTENANCES AND AT NO COST TO THE CITY.
3. CONSTRUCTION SHALL BE IN ACCORDANCE WITH THE CITY OF RIVERSIDE DEPARTMENT OF PUBLIC WORKS, STANDARD DRAWINGS, ITS SUPPLEMENTAL NOTES AND THE STANDARD SPECIFICATIONS FOR PUBLIC WORKS CONSTRUCTION, CURRENT EDITION.
4. THE PRIVATE ENGINEER SIGNING THESE PLANS IS RESPONSIBLE FOR ASSURING THE ACCURACY AND ACCEPTABILITY OF THE WORK HEREON. IN THE EVENT OF DISCREPANCIES ARISING DURING CONSTRUCTION, THE PRIVATE ENGINEER SHALL BE RESPONSIBLE FOR DETERMINING AN ACCEPTABLE SOLUTION AND REVISING THE PLANS FOR APPROVAL BY THE CITY (THIS NOTE REQUIRED ON ALL PLANS.)
5. QUANTITIES SHOWN ARE FOR INFORMATION ONLY AND THE CITY OF RIVERSIDE IS NOT RESPONSIBLE FOR THEIR ACCURACY.
6. THE CONTRACTOR SHALL CALL IN A LOCATION REQUEST TO UNDERGROUND SERVICE ALERT (USA), PHONE # 1-800-227-2600, TWO WORKING DAYS BEFORE DIGGING. NO CONSTRUCTION PERMIT WILL BE ISSUED BY THE PUBLIC WORKS DEPARTMENT INVOLVING EXCAVATION FOR UNDERGROUND FACILITIES UNLESS THE APPLICANT HAS BEEN PROVIDED AN INQUIRY IDENTIFICATION NUMBER BY U.S.A.
7. CONTRACTOR IS TO VERIFY EXISTING SEWER ELEVATION PRIOR TO CONSTRUCTION.
8. LOCATION OF LATERALS TO BE DETERMINED IN THE FIELD AT THE DIRECTION OF THE OWNER. AVOID CONFLICT WITH PROPOSED AND/OR EXISTING FACILITIES.
9. NO FINISHED FLOOR ELEVATION SHALL BE LESS THAN 6" ABOVE THE UPPER MANHOLE RIM ELEVATION OF THE SEWER LINE SEGMENT BEING CONNECTED TO, WITHOUT HAVING A PROPER BACKWATER VALVE INSTALLED IN THE LATERAL.
10. A PLUG SHALL BE INSTALLED AND WILL REMAIN IN PLACE WHERE THE NEW SEWER CONNECTS WITH THE EXISTING SEWER UNTIL THE NEW SEWER IS ACCEPTED BY THE CITY.
11. THE SEWER CONTRACTOR SHALL ADJUST MANHOLES TO FINAL GRADE AFTER PAVING IS COMPLETED.
12. DEVELOPER AND/OR CONTRACTOR TO GIVE RCFC 5-DAYS WRITTEN NOTICE PRIOR TO STARTING WORK ON STORM DRAIN (OR DOING ANY WORK WITHIN RCFC EASEMENTS).
13. BEFORE THE RIP-RAP AT THE OUTLET OF ANY DRAINAGE STRUCTURE IS ACCEPTED BY THE CITY, IT SHALL BE TESTED UNDER FLOWS AS CLOSE AS POSSIBLE TO DESIGN CONDITIONS WITH WATER OBTAINED FROM FIRE HYDRANTS IN THE IMMEDIATE AREA.

GRADING GENERAL NOTES:

1. ALL GRADING SHALL CONFORM TO THE RIVERSIDE MUNICIPAL CODE, TITLE 17 AND APPENDIX CHAPTER 33, VOL. 1 OF THE CURRENT CITY-ADOPTED EDITION OF THE UNIFORM BUILDING CODE.
2. ALL PROVISIONS OF THE PRELIMINARY SOILS REPORT PREPARED BY **MEDALL, ARAGON GEOTECHNICAL, INC.** DATED **APRIL 7,2009** AND THE ADENDUM DATED **MARCH , 2011** SHALL BE COMPLIED WITH DURING GRADING OPERATIONS. CITY BUSINESS TAX CERTIF. NO. BL00074701, EXP. DATE FEBRUARY 24, 2012.
3. THIS PLAN IS FOR GRADING PURPOSES ONLY AND IS NOT TO BE USED FOR THE PURPOSE OF CONSTRUCTING ON-SITE OR OFF-SITE IMPROVEMENTS. ISSUANCE OF A PERMIT BASED ON THIS PLAN DOES NOT CONSTITUTE APPROVAL OF DRIVEWAY LOCATIONS OR SIZES, PARKING LOT STRUCTURAL SECTIONS OR LAYOUT, ADA-RELATED REQUIREMENTS, BUILDING LOCATIONS OR FOUNDATIONS, WALLS, CURBING, OFF-SITE DRAINAGE FACILITIES OR OTHER ITEMS NOT RELATED DIRECTLY TO THE BASIC GRADING OPERATION. ON-SITE IMPROVEMENTS SHALL BE CONSTRUCTED FROM APPROVED BUILDING PERMIT PLANS. OFF-SITE IMPROVEMENTS SHALL BE CONSTRUCTED FROM PLANS APPROVED FOR THIS PURPOSE BY THE PUBLIC WORKS DEPARTMENT.
4. CERTIFICATION FROM THE REGISTERED (CIVIL ENGINEER/ARCHITECT/LANDSCAPE ARCHITECT) STATING THAT THE GRADING HAS BEEN COMPLETED PER THE APPROVED PLAN, AND A COMPACTION REPORT FROM THE SOIL ENGINEER FOR FILL AREAS ARE REQUIRED PRIOR TO BUILDING PERMITS BEING ISSUED.
5. CONTRACTOR IS RESPONSIBLE FOR EROSION, DUST AND TEMPORARY DRAINAGE CONTROL DURING GRADING OPERATIONS.
   A. ALL MANUFACTURED SLOPES IN EXCESS OF 5 FEET IN VERTICAL HEIGHT ARE TO BE PROTECTED FROM EROSION DURING ROUGH GRADING OPERATIONS AND, THEREAFTER, UNTIL INSTALLATION OF FINAL GROUNDCOVER. (SEE LANDSCAPE PLANS FOR FINAL GROUNDCOVER).
   B. ALL SLOPE PROTECTION SWALES TO BE CONSTRUCTED AT THE SAME TIME AS BANKS ARE GRADED.
   C. THE DEVELOPER AND HIS CONTRACTOR ARE RESPONSIBLE FOR IMPLEMENTATION AND MAINTENANCE OF THE EROSION CONTROL MEASURES SHOWN ON THIS PLAN AND SWPPP AND ALSO TO PROVIDE ANY ADDITIONAL EROSION CONTROL MEASURES (E.G., HYDROSEEDING, MULCHING OF STRAW, SAND-BAGGING, DIVERSION DITCHES, RETENTION BASINS, ETC.) DICTATED BY FIELD CONDITIONS TO PREVENT EROSION AND/OR THE INTRODUCTION OF DIRT, MUD OR DEBRIS INTO EXISTING PUBLIC STREETS AND/OR ONTO ADJACENT PROPERTIES DURING ANY PHASE OF CONSTRUCTION OPERATIONS. SPECIAL ATTENTION SHALL BE GIVEN TO ADDITIONAL EROSION CONTROL MEASURES NOTED ABOVE DURING THE PERIOD OCTOBER 15 TO APRIL 15.
   D. AFTER A RAINSTORM, ALL SILT AND DEBRIS SHALL BE REMOVED FROM CHECK BERMS AND CHECK DAMS. SILT AND DEBRIS SHALL BE REMOVED FROM CITY OF RIVERSIDE STREETS. THIS REQUIREMENT SHALL REMAIN IN EFFECT UNTIL CITY ACCEPTANCE OF THIS PROJECT.
6. ANY ON-SITE RETAINING WALLS SHOWN ON THIS PLAN THAT ARE UNDER 3 FEET IN HEIGHT AND SUPPORT A SURCHARGE OR THAT ARE OVER 3 FEET IN HEIGHT REQUIRE SEPARATE REVIEW, APPROVAL AND A BUILDING PERMIT FROM THE BUILDING DIVISION, PLANNING DEPARTMENT. ANY NECESSARY RETAINING WALLS ON THE PERIMETER OF THIS SITE SHALL BE IN PLACE AND APPROVED BY THE BUILDING INSPECTOR PRIOR TO ISSUANCE OF THE GRADING PERMIT. APPROVED SEQUENCED GRADING WITH 1 1/2:1 MAXIMUM SLOPES TO WITHIN 2 FEET OF THE ADJACENT PROPERTY LINE MAY BE ACCEPTABLE TO ALLOW FOR ISSUANCE OF A GRADING PERMIT PRIOR TO COMPLETION OF ANY NECESSARY PERIMETER RETAINING WALLS.
7. ANY IMPROVEMENTS CONSTRUCTED IN THE PUBLIC RIGHT-OF-WAY WILL REQUIRE A SEPARATE CONSTRUCTION PERMIT AND INSPECTION FROM THE PUBLIC WORKS DEPARTMENT.
8. ANY WALLS, FENCES, STRUCTURES AND/OR APPURTENANCES ADJACENT TO THIS PROJECT ARE TO BE PROTECTED IN PLACE. IF GRADING OPERATIONS DAMAGE OR ADVERSELY AFFECT SAID ITEMS IN ANY WAY, THE CONTRACTOR AND/OR DEVELOPER IS RESPONSIBLE FOR WORKING OUT AN ACCEPTABLE SOLUTION TO THE SATISFACTION OF THE AFFECTED PROPERTY OWNER(S).
9. THE CONTRACTOR/DEVELOPER IS RESPONSIBLE FOR ENSURING THAT RETAINING WALLS DO NOT INTERFERE WITH PROVISION OF UTILITIES.
10. IT IS THE GRADING CONTRACTOR'S RESPONSIBILITY TO ENSURE THAT ADEQUATE COMPACTION HAS BEEN ATTAINED ON THE ENTIRE GRADING SITE, INCLUDING FILL AREAS OUTSIDE THE BUILDING PADS AND ON ALL FILL SLOPES.
11. IT IS THE SOIL ENGINEER'S RESPONSIBILITY TO OBSERVE AND PERFORM COMPACTION TESTS DURING THE GRADING TO EVALUATE THE PREPARATION OF THE NATURAL GROUND SURFACE TO RECEIVE THE FILL AND THE COMPACTION ATTAINED IN THE FILL, INCLUDING FILL AREAS OUTSIDE THE BUILDING PADS AND ON ALL FILL SLOPES.
12. EARTHWORK QUANTITIES ARE SHOWN FOR GRADING PERMIT PURPOSES ONLY, AND THE CITY OF RIVERSIDE IS NOT RESPONSIBLE FOR THEIR ACCURACY.
13. FOR GRADING OF AREAS OF 1 ACRE OR MORE, A STORM WATER POLLUTION PREVENTION PLAN (SWPPP) SHALL BE KEPT ON-SITE AND MADE AVAILABLE UPON REQUEST OF A REPRESENTATIVE OF THE REGIONAL WATER QUALITY CONTROL BOARD (RWQCB) - SANTA ANA REGION AND/OR THE CITY OF RIVERSIDE.
14. GRADING OPERATIONS SHALL BE LIMITED TO BETWEEN THE HOURS OF 7 A.M. AND 7 P.M. ON WEEKDAYS AND BETWEEN 8 A.M. AND 5 P.M. ON SATURDAYS. NO GRADING WILL BE PERMITTED ON SUNDAY OR FEDERAL HOLIDAYS. (RIVERSIDE MUNICIPAL CODE, 7.35.010, ORDINANCE NO. 6273)

SHEET INDEX:

STORM DRAIN PLANS (D-725)

SHEET NO.	DESCRIPTION
1	TITLE SHEET
2	STORM DRAIN PLAN AND PROFILE
3	HOLE DAM CULVERT PLAN AND PROFILE
4	STILLING BASIN
5	WALL PROFILE
6-11	CALTRANS DETAILS

STREET IMPROVEMENT PLANS (R-4146)

SHEET NO.	DESCRIPTION
1	TITLE SHEET
2-5	PLAN AND PROFILE

LANDSCAPE & IRRIGATION PLANS (R-4146L)

SHEET NO.	DESCRIPTION
1-10	LANDSCAPE AND IRRIGATION PLANS

TEMPORARY GRADING PLANS (R-4146GR)

SHEET NO.	DESCRIPTION
1-13	DEMOLITION, GRADING AND TEMP. SERVICES

SEWER IMPROVEMENT PLANS (S-2084)

SHEET NO.	DESCRIPTION
1-2	SANITARY SEWER IMPROVEMENT PLAN

WATER PLANS (D5-0912963)

SHEET NO.	DESCRIPTION
1-11	POTABLE AND RECLAIMED WATER, PLAN AND PROFILE

ELECTRIC UNDERGROUND PLANS (100012)

SHEET NO.	DESCRIPTION
1-7	ELECTRICAL PLANS

STREET LIGHT PLANS (100024)

SHEET NO.	DESCRIPTION
1-2	STREET LIGHT PLANS

REFERENCE DRAWINGS

AS-BUILT 6-12-14 DC

R-3817 PUBLIC WORKS D5-0809464 WATER X-485 TRAFFIC
R-3943 PUBLIC WORKS 080015 ELECTRIC
R-2600 PUBLIC WORKS 070021 ELECTRIC
R-2505 PUBLIC WORKS

DESIGN W.O. - 0911041
CONSTRUCTION W.O. - 1015572

CITY OF RIVERSIDE BUSINESS TAX ACCT.#058833 EXP.1/1/12

811 Know what's below. Call before you dig.

REGISTERED PROFESSIONAL ENGINEER CHARISSA J.A. LEACH NO. 53390 EXP. 6-30-11 CIVIL STATE OF CALIFORNIA

PLANS PREPARED BY:
adkan ENGINEERS
Civil Engineering · Surveying · Planning
6820 Airport Drive, Riverside, CA 92504
Tel:(951) 688-0241 · Fax:(951) 688-0599
Under the Supervision of: [signature] 3-10-11
Charissa Leach, R.C.E. 53390 Exp. 06.30.11 Date:

BENCHMARK: G3-F2
CITY OF RIVERSIDE BENCHMARK No. G3-F2 BRASS DISK IN A MONUMENT WELL AT THE INTERSECTION OF ARLINGTON AVENUE AND VAN BUREN BOULEVARD

ELEVATION: 736.332

MARK	REVISIONS	APPR.	DATE

DESIGNED BY: MITCH DRAWN BY: R.D.R. CHECKED BY: C-

CITY OF RIVERSIDE
PUBLIC WORKS DEPARTMENT

APPROVED BY	DATE	BY
PRINCIPAL ENGINEER	3-11-11	[initials]
TRAFFIC DIVISION	3-11-11	[initials]
CONSTRUCTION ADMIN.	3/14/11	[initials]
SURVEYOR	CS	3/10/11
LANDSCAPE		
PARK & RECREATION		

APPROVED BY [signature]
CITY ENGINEER
DATE 3/15/11

STORM DRAIN PLAN
JURUPA AVENUE EXTENSION PHASE II
HOLE CULVERT AND STORM DRAIN
COVER SHEET

HORIZ. SCALE: AS NOTED VERT. SCALE: 1"=4'

D-725
SHEET 1 OF 11
J.N. 7669

PLOT DATE:3/10/2011 9:21 AM

U:\Projects\City of Riverside\7669\Engineering\Storm Drain\SD01.dwg

INDEXED 6-12-14 DC

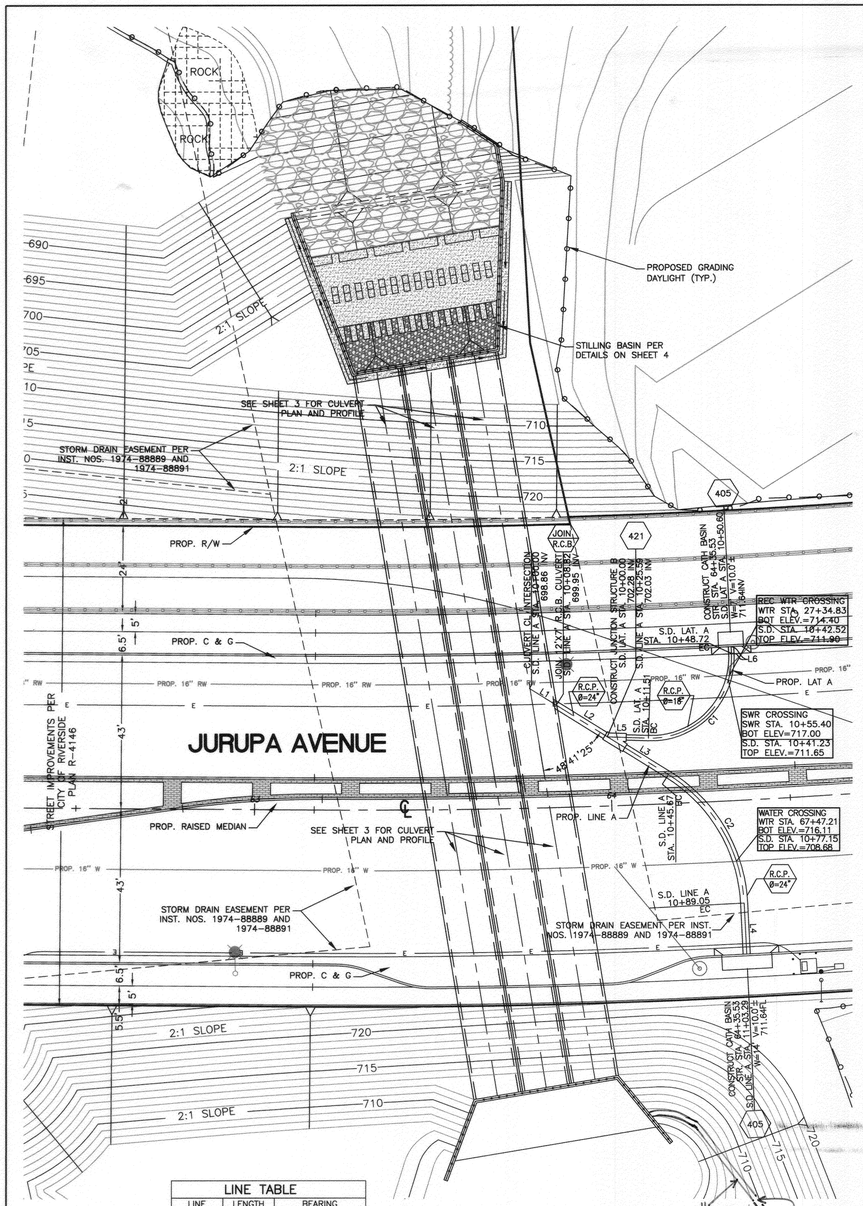

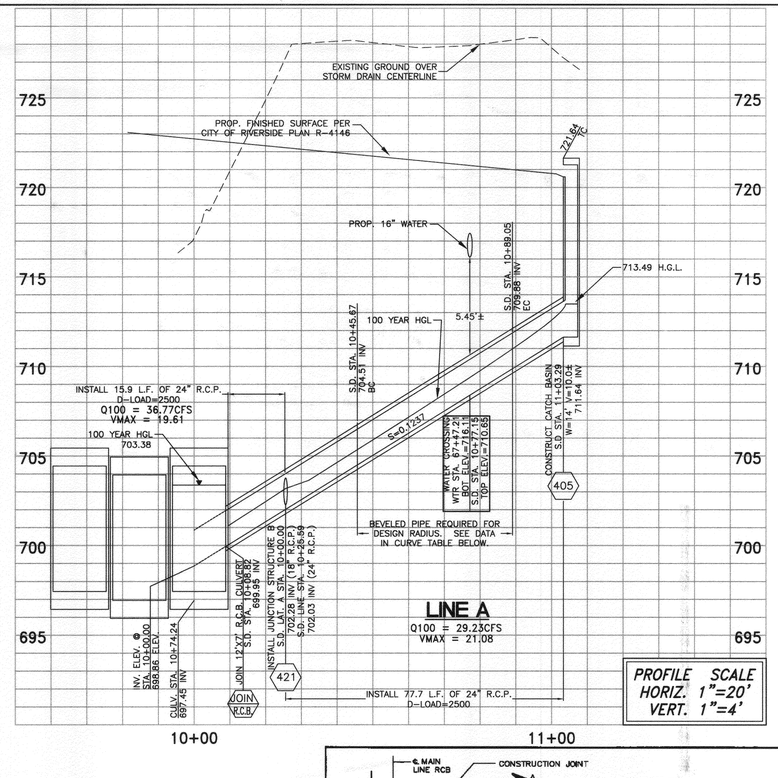

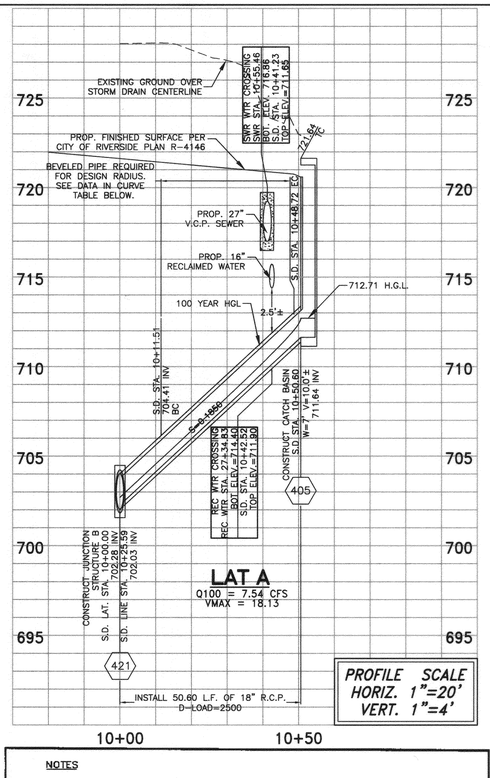

LINE TABLE		
LINE	LENGTH	BEARING
L1	8.82'	S58°10'18"E
L2	16.77'	S58°10'18"E
L3	20.08'	S58°10'18"E
L4	14.24'	S02°56'04"E
L5	11.51'	S88°10'18"E
L6	1.87'	N02°56'04"W

CURVE TABLE					BEVELED PIPE DATA			
CURVE	DELTA	RADIUS	LENGTH	TANGENT	LENGTH	PIPE Φ	WALL t	DROP
C1	94°45'46"	22.50'	37.21'	24.45'	4.0'	1.5"	3"	4"
C2	55°14'14"	45.00'	43.38'	23.54'	4.0'	2.0"	3"	2.5"

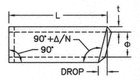

BEVELED PIPE DETAIL

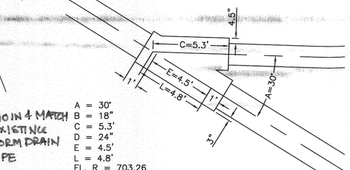

A = 30°
B = 18"
C = 5.3'
D = 24"
E = 4.5'
L = 4.8'
EL. R = 703.26
EL. S = 702.28

421 JUNCTION STRUCTURE B DETAIL

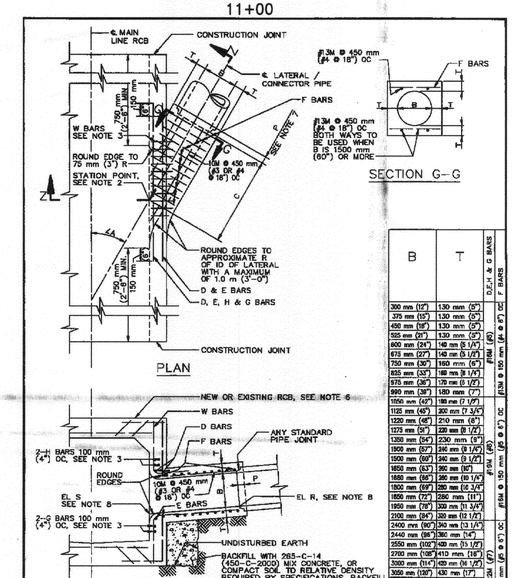

B	T	D,E,H & G BARS	F BARS	D & E BARS
300 mm (12")	130 mm (5")			
375 mm (15")	130 mm (5")			
450 mm (18")	130 mm (5")			
525 mm (21")	130 mm (5")			
600 mm (24")	140 mm (5 1/4")			
675 mm (27")	140 mm (5 1/4")			
750 mm (30")	160 mm (6")			
825 mm (33")	180 mm (7 1/2")			
975 mm (38")	170 mm (6 1/2")			
990 mm (39")	180 mm (7")			
1050 mm (42")	180 mm (7 1/2")			
1125 mm (45")	200 mm (7 3/4")			
1200 mm (48")	210 mm (8")			
1275 mm (51")	220 mm (8 1/2")			
1350 mm (54")	230 mm (9")			
1425 mm (57")	240 mm (9 1/4")			
1500 mm (60")	240 mm (9 1/2")			
1650 mm (63")	260 mm (10")			
1800 mm (66")	260 mm (10 1/4")			
1850 mm (69")	280 mm (10 3/4")			
1950 mm (72")	280 mm (11")			
2100 mm (78")	300 mm (11 3/4")			
2250 mm (84")	320 mm (12 1/2")			
2400 mm (90")	340 mm (13 1/4")			
2550 mm (96")	360 mm (14")			
2700 mm (102")	380 mm (13 1/2")			
2850 mm (108")	410 mm (16")			
3000 mm (114")	410 mm (16 1/2")			
3150 mm (120")	430 mm (17")			
3300 mm (126")	430 mm (17")			
3450 mm (132")	450 mm (17 1/2")			
3600 mm (144")	480 mm (18")			

JOIN R.C.B. R.C.P. TO R.C.B. JOIN DETAIL

STANDARD PLANS FOR PUBLIC WORKS CONSTRUCTION

PROMULGATED BY THE PUBLIC WORKS STANDARDS INC. GREENBOOK COMMITTEE 1994 REV. 1996

JUNCTION STRUCTURE – PIPE TO RCB

STANDARD PLAN METRIC 333-1

USE WITH STANDARD SPECIFICATIONS FOR PUBLIC WORKS CONSTRUCTION

SHEET 1 OF 2

NOTES

1. VALUES FOR A, B AND C SHALL BE SHOWN ON THE PLANS. ELEVATION R AND ELEVATION S SHALL BE SHOWN WHEN REQUIRED PER NOTE 8.
2. STATIONS SPECIFIED ON THE PLANS APPLY AT THE INTERSECTION OF CENTERLINES OF MAIN LINE AND LATERALS, EXCEPT THAT STATIONS FOR CATCH BASIN CONNECTOR PIPES APPLY AT INSIDE WALL OF STRUCTURE.
3. REINFORCING STEEL SHALL CONFORM TO ASTM A 615M, GRADE 300, (ASTM A 615, GRADE 40), AND SHALL TERMINATE 40 mm (1 1/2") CLEAR OF CONCRETE SURFACE UNLESS OTHERWISE SHOWN:
   a. W BARS ARE OF SIZE AND SPACING SPECIFIED FOR WALL STEEL ON PLANS, AND SHALL BE CUT IN CENTER OF OPENING AND BENT INTO TOP AND BOTTOM OF JUNCTION STRUCTURE.
   b. OMIT H BARS WHEN SOFFIT OF SPUR IS 300 mm (12") OR LESS BELOW SOFFIT OF MAIN LINE, AND OMIT G BARS WHEN INVERT OF SPUR IS 300 mm (12") OR LESS ABOVE FLOOR OF MAIN LINE.
4. JUNCTION STRUCTURE SHALL BE POURED MONOLITHICALLY WITH MAIN LINE, MANHOLE OR TRANSITION STRUCTURE.
5. FLOOR OF STRUCTURE SHALL BE STEEL-TROWELED TO THE SPRING LINE.
6. WHEN CONNECTING TO EXISTING RCB, BREAKOUT LIMITS AND DETAILS SHALL BE SHOWN ON THE PLANS.
7. EMBEDMENT, P, SHALL BE 130 mm (5") FOR B = 2400 mm (96") OR LESS 200 mm (8") FOR B OVER 2400 mm (96").
8. IF ELEVATION R AND ELEVATION S ARE NOT SHOWN ON THE PLANS THEN THE INLET OPENING SHALL FALL 150 mm (6") BELOW THE SOFFIT OF THE MAIN LINE WITH THE INLET PIPE LAID ON A STRAIGHT GRADE FROM MAIN LINE TO CATCH BASIN OR TO GRADE BREAK IN INLET LINE. ELEVATION S SHALL BE SHOWN ON THE PLANS IF THE INLET OPENING FALLS MORE THAN 150 mm (6") BELOW THE SOFFIT OF THE MAIN LINE WITH THE INLET PIPE LAID ON A STRAIGHT GRADE AS STATED ABOVE.
   ELEVATION R SHALL BE SHOWN ON THE PLANS ONLY WHEN A STUB IS TO BE PROVIDED FOR A FUTURE CONNECTION.
9. LATERALS OR CONNECTOR PIPES 600 mm (24") OR LESS IN DIAMETER SHALL BE NO MORE THAN 1.5 m (5') ABOVE THE INVERT. LATERALS OR CONNECTOR PIPES 675 mm (27") OR LARGER IN DIAMETER SHALL BE NO MORE THAN 450 mm (18") ABOVE THE INVERT, WITH THE EXCEPTION THAT CATCH BASIN CONNECTOR PIPES LESS THAN 15 m (50') IN LENGTH SHALL NOT BE MORE THAN 1.5 m (5') ABOVE THE INVERT.
10. THE NEED FOR AN EDGE BEAM AND/OR ADDITIONAL REINFORCEMENT SHALL BE INVESTIGATED BY THE ENGINEER FOR ANY ONE OF THE FOLLOWING CONDITIONS:
   a. ANGLE A IS LESS THAN 30°
   b. TOP OF INLET PIPE IS LESS THAN 150 mm (6") BELOW THE SOFFIT
   c. FLOW LINE OF INLET PIPE IS LESS THAN 180 mm (7") ABOVE THE THE FLOOR OF THE RCB AT THE INSIDE FACE

JOIN R.C.B. R.C.P. TO R.C.B. JOIN DETAIL NOTES

STANDARD PLANS FOR PUBLIC WORKS CONSTRUCTION

JUNCTION STRUCTURE – PIPE TO RCB

STANDARD PLAN METRIC 333-1

SHEET 2 OF 2

20 0 20 40 60

Scale 1" = 20'

811 Know what's below. Call before you dig.

REGISTERED PROFESSIONAL ENGINEER CHARISSA J.A. LEACH NO. 53390 EXP. 6-30-11 CIVIL STATE OF CALIFORNIA

CITY OF RIVERSIDE BUSINESS TAX ACCT.#058833 EXP.1/1/12

PLANS PREPARED BY: adkan ENGINEERS
Civil Engineering · Surveying · Planning
6820 Airport Drive, Riverside, CA 92504
Tel:(951) 688-0241 Fax:(951) 688-0599
Under the Supervision of: Charissa Leach, R.C.E. 53390 Exp. 06.30.11 Date: 3-10-11

BENCHMARK: G3-F2
CITY OF RIVERSIDE BENCHMARK No. G3-F2 BRASS DISK IN A MONUMENT WELL AT THE INTERSECTION OF ARLINGTON AVENUE AND VAN BUREN BOULEVARD

ELEVATION: 736.332

MARK	REVISIONS	APPR.	DATE

DESIGNED BY: MITCH DRAWN BY: R.D.R. CHECKED BY: C-

CITY OF RIVERSIDE
PUBLIC WORKS DEPARTMENT

APPROVED BY	DATE	BY
PRINCIPAL ENGINEER	3-11-11	
TRAFFIC DIVISION	3-11-11	
CONSTRUCTION ADMIN.	3/10/11	
SURVEYOR	3/10/11	
LANDSCAPE		
PARK & RECREATION		

APPROVED BY: CITY ENGINEER
DATE 3/15/11

STORM DRAIN PLAN
JURUPA AVENUE EXTENSION PHASE II
HOLE CULVERT AND STORM DRAIN
LINE A AND LAT A PLAN AND PROFILE

HORIZ. SCALE: AS NOTED VERT. SCALE: 1"=4'

DESIGN W.O. – 0911041
CONSTRUCTION W.O. – 1015572

D-725
SHEET 2 OF 11
J.N. 7669

PLOT DATE:3/10/2011 9:21 AM

U:\Projects\City of Riverside\7669\Engineering\Storm Drain\SD02.dwg

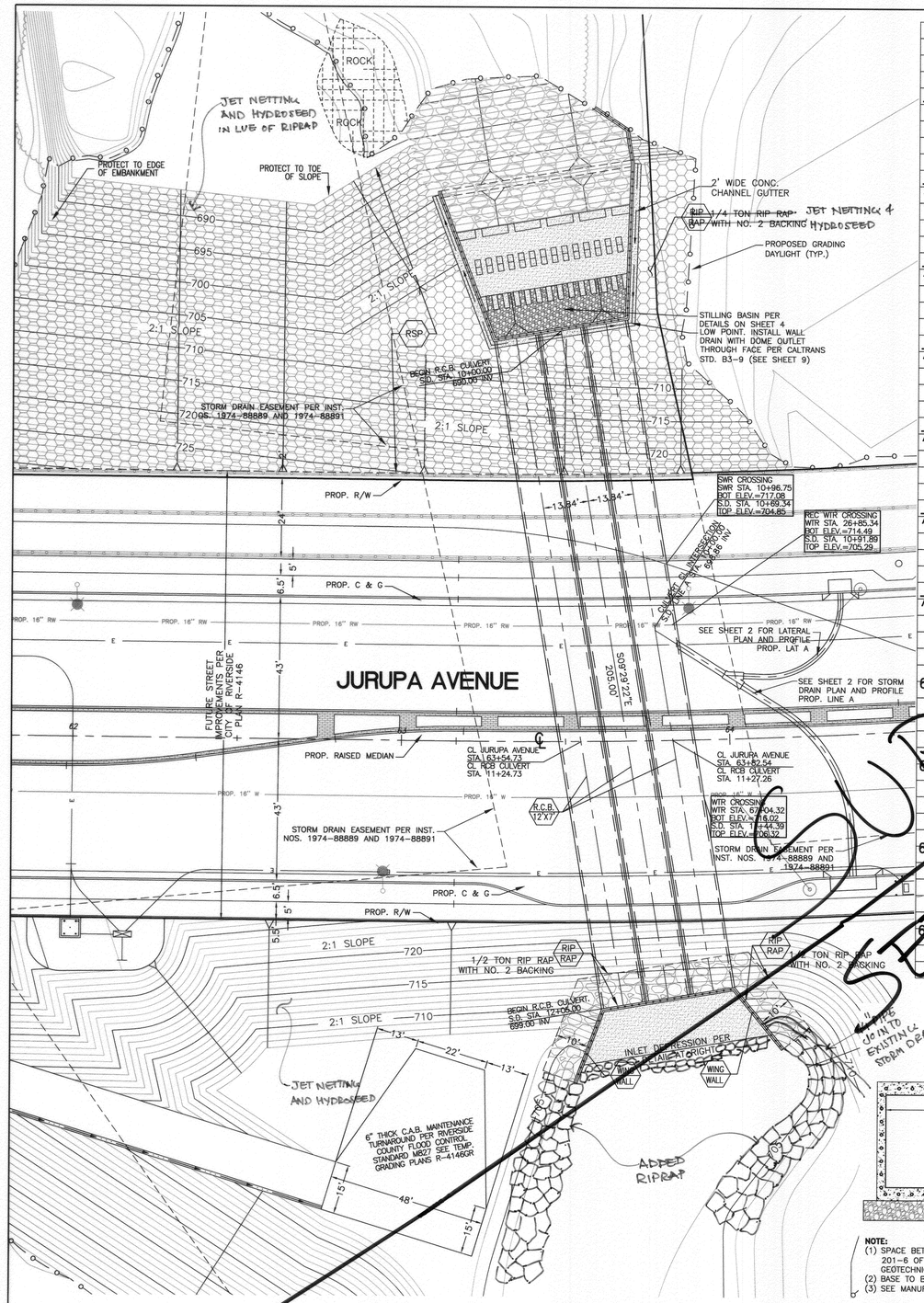

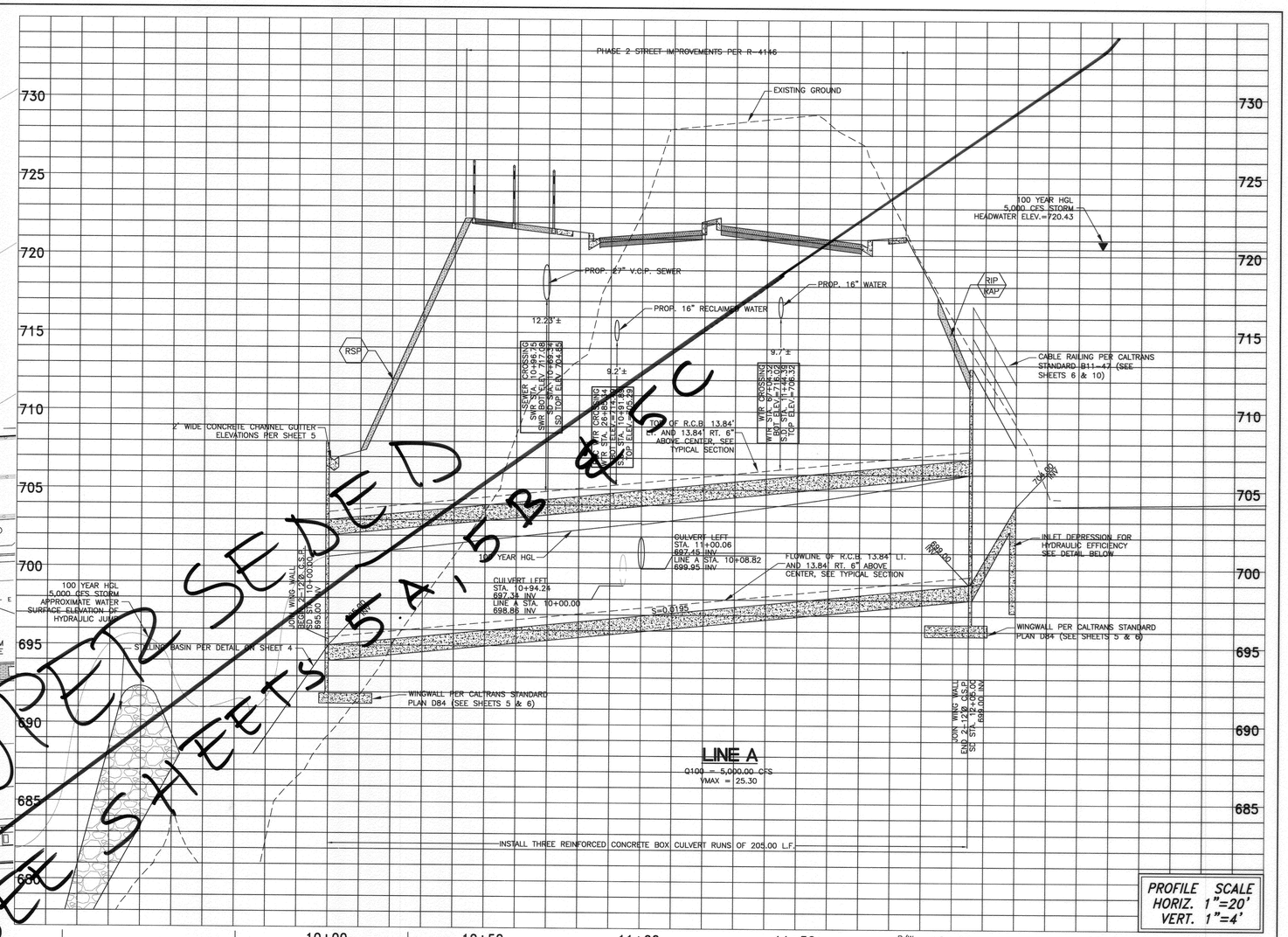

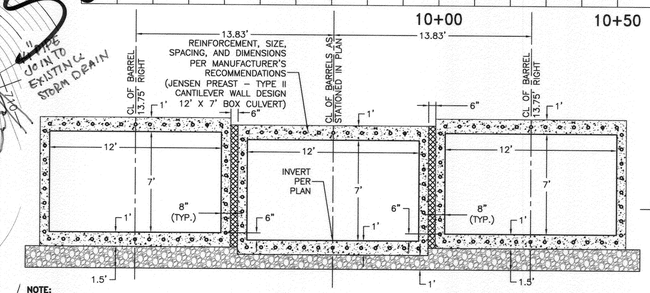

NOTE:
(1) SPACE BETWEEN CULVERTS TO BE FILLED WITH CONTROLLED LOW STRENGTH MATERIAL MEETING THE REQUIREMENTS IN SECTION 201-6 OF THE "GREENBOOK" SPECIFICATIONS FOR PUBLIC WORKS CONSTRUCTION. MIXTURE COMPOSITION TO BE SENT TO THE GEOTECHNICAL ENGINEER FOR REVIEW 14 DAYS PRIOR TO PLACEMENT
(2) BASE TO BE CLASS II AGGREGATE COMPACTED TO 95%.
(3) SEE MANUFACTURER'S RECOMMENDATIONS FOR CONNECTION DETAILS

R.C.B. 12'X7' **REINFORCED CONCRETE BOX (R.C.B.) TYPICAL SECTION**
NOT TO SCALE

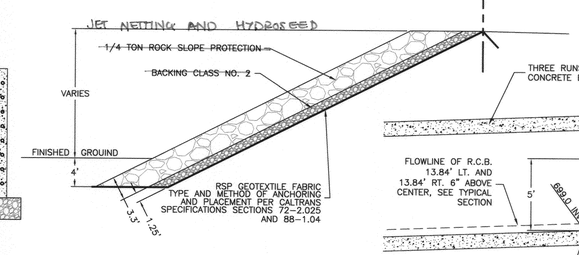

RSP **ROCK SLOPE PROTECTION DETAIL**
NOT TO SCALE

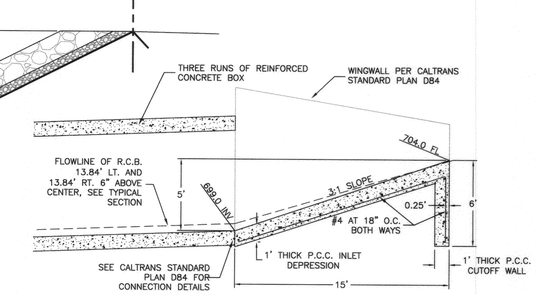

INLET DEPRESSION DETAIL
NOT TO SCALE

CITY OF RIVERSIDE BUSINESS TAX ACCT.#058833 EXP.1/1/12

Know what's below. Call before you dig. 811

REGISTERED PROFESSIONAL ENGINEER CHARISSA J.A. LEACH NO. 53390 EXP. 6-30-11 CIVIL STATE OF CALIFORNIA

PLANS PREPARED BY: adkan ENGINEERS
Civil Engineering · Surveying · Planning
6820 Airport Drive, Riverside, CA 92504
Tel:(951) 688-0240 Fax:(951) 688-0599
Under the Supervision of: Charissa Leach, R.C.E. 53390 Exp. 06.30.11 Date: 3-10-11

BENCHMARK: G3-F2
CITY OF RIVERSIDE BENCHMARK No. G3-F2 BRASS DISK IN A MONUMENT WELL AT THE INTERSECTION OF ARLINGTON AVENUE AND VAN BUREN BOULEVARD

ELEVATION: 736.332

MARK	REVISIONS	APPR.	DATE

DESIGNED BY: MITCH DRAWN BY: R.D.R. CHECKED BY: C-

CITY OF RIVERSIDE
PUBLIC WORKS DEPARTMENT

APPROVED BY	DATE	BY
PRINCIPAL ENGINEER	3-11-11	PH
TRAFFIC DIVISION	3-11-11	[illegible]
CONSTRUCTION ADMIN.	3/14/11	[illegible]
SURVEYOR		[illegible]
LANDSCAPE		
PARK & RECREATION		

APPROVED BY [signature] CITY ENGINEER
DATE 3/15/11

STORM DRAIN PLAN
JURUPA AVENUE EXTENSION PHASE II
HOLE CULVERT AND STORM DRAIN
R.C.B. CULVERT PLAN AND PROFILE

D-725
SHEET 3 OF 11

HORIZ. SCALE: AS NOTED VERT. SCALE: 1"=4'
J.N. 7669

DESIGN W.O. – 0911041
CONSTRUCTION W.O. – 1015572

U:\Projects\City of Riverside\7669\Engineering\Storm Drain\SD03.dwg
PLOT DATE:3/10/2011 9:19 AM

SEE SHEET 5 & 6

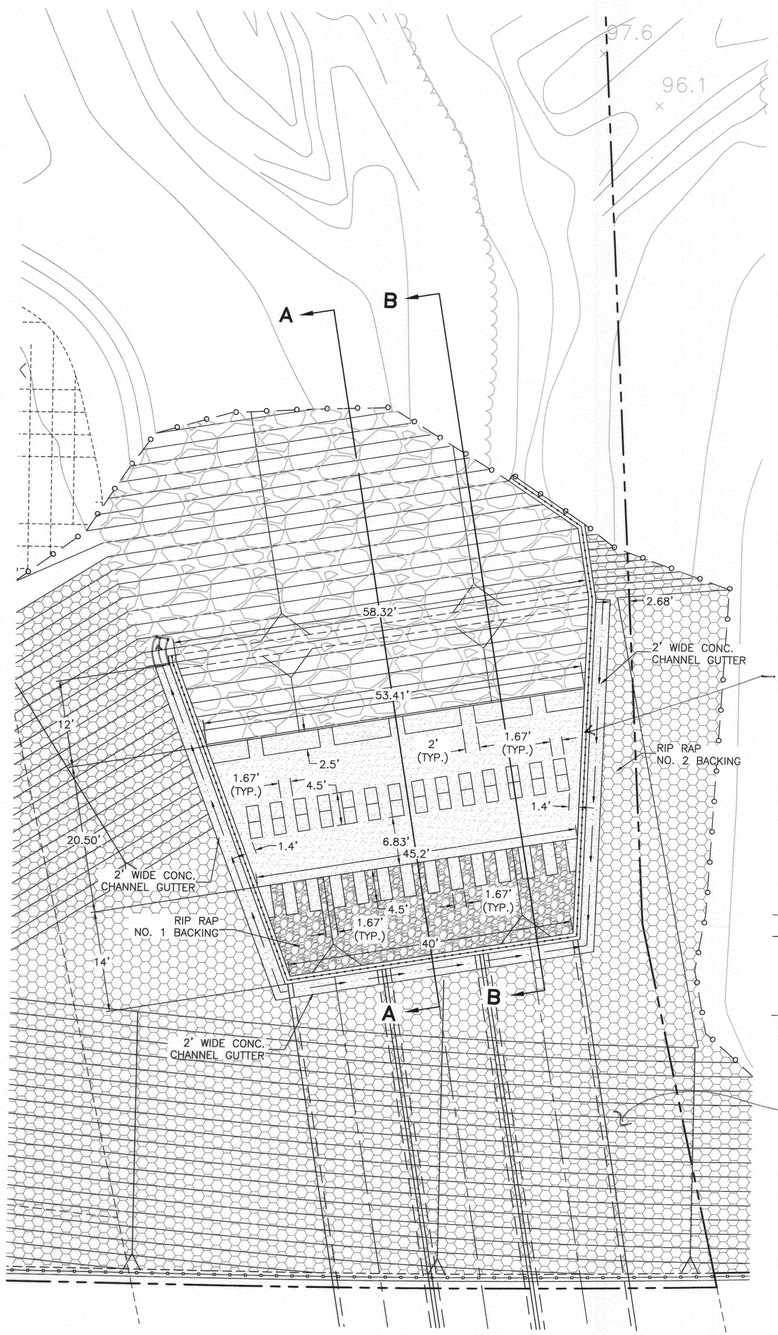

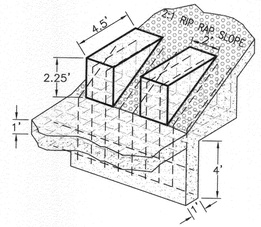

CHUTE DETAIL

N.T.S.

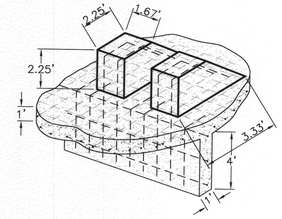

BAFFLE DETAIL

N.T.S.

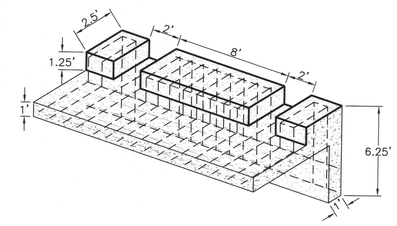

END SILL DETAIL

N.T.S.

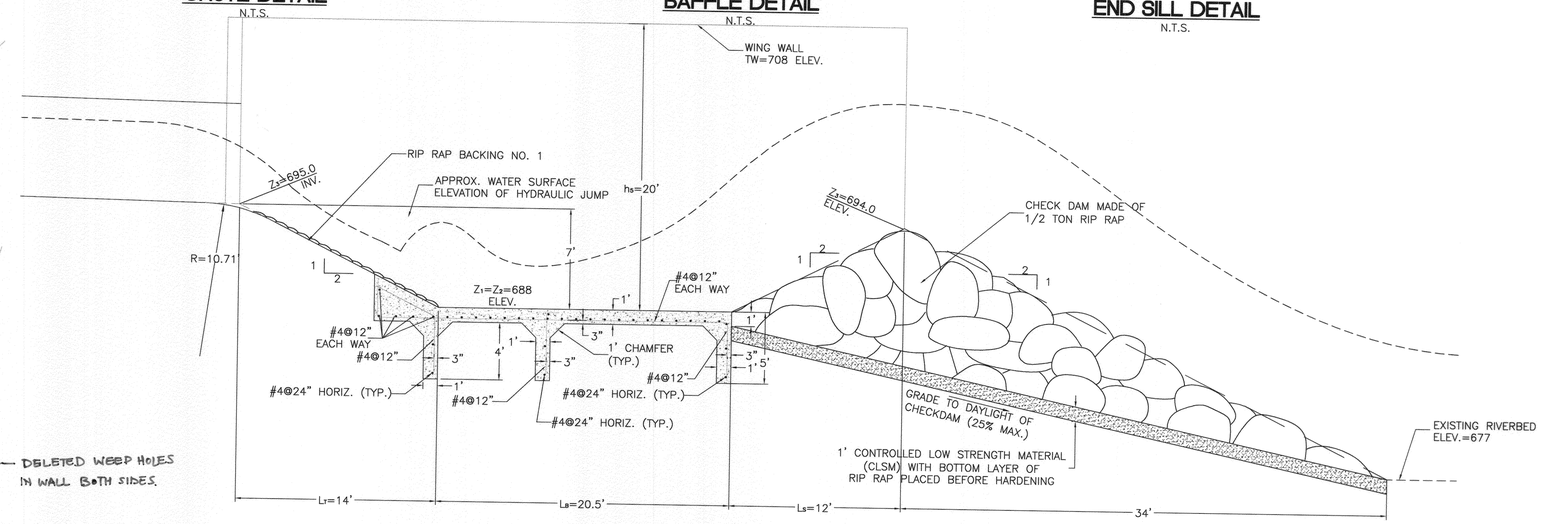

SECTION A-A

N.T.S.

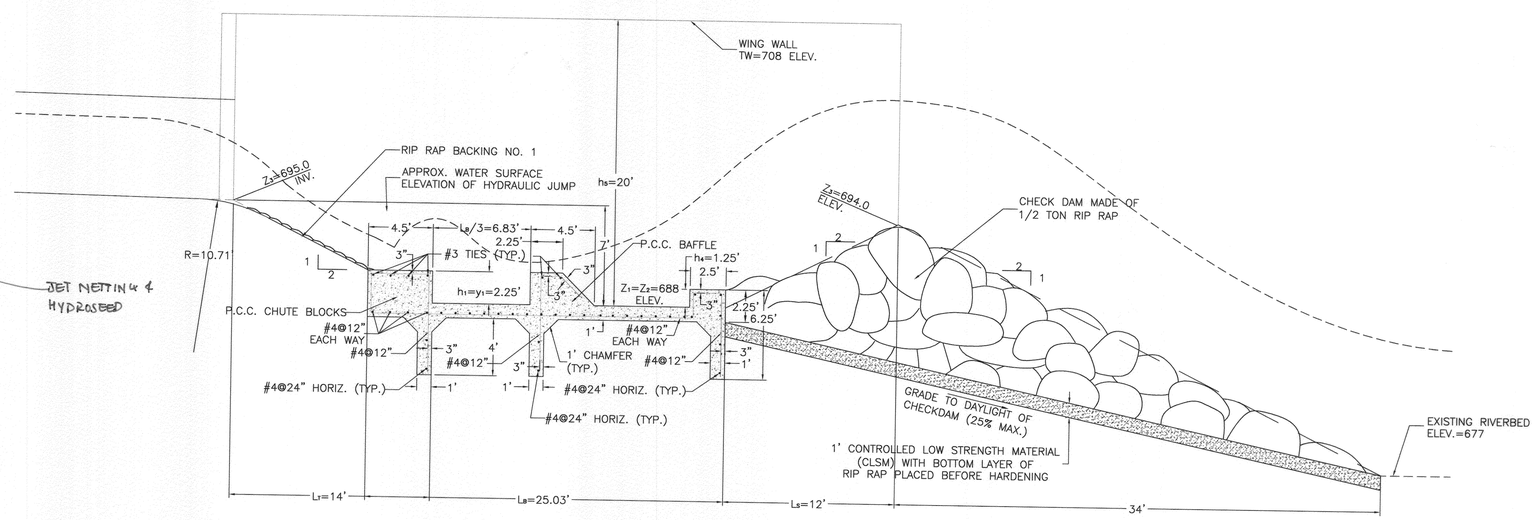

SECTION B-B

N.T.S.

10 0 10 20 30

Scale 1" = 10'

Know what's below. Call before you dig.

REGISTERED PROFESSIONAL ENGINEER CHARISSA J.A. LEACH NO. 53390 EXP. 6-30-11 CIVIL STATE OF CALIFORNIA

CITY OF RIVERSIDE BUSINESS TAX ACCT.#058833 EXP.1/1/12

PLANS PREPARED BY: adkan ENGINEERS
Civil Engineering · Surveying · Planning
6820 Airport Drive, Riverside, CA 92504
Tel:(951) 688-0241 · Fax:(951) 688-0599
Under the Supervision of: Charissa Leach, R.C.E. 53390 Exp. 06.30.11 Date: 3-10-11

BENCHMARK: G3-F2
CITY OF RIVERSIDE BENCHMARK No. G3-F2 BRASS DISK IN A MONUMENT WELL AT THE INTERSECTION OF ARLINGTON AVENUE AND VAN BUREN BOULEVARD

ELEVATION: 736.332

MARK	REVISIONS	APPR.	DATE

DESIGNED BY: MITCH DRAWN BY: R.D.R. CHECKED BY: C-

CITY OF RIVERSIDE
PUBLIC WORKS DEPARTMENT

APPROVED BY	DATE	BY
PRINCIPAL ENGINEER	3/14/11	
TRAFFIC DIVISION	3/14/11	
CONSTRUCTION ADMIN.	3/14/11	
SURVEYOR	3/16/11	
LANDSCAPE		
PARK & RECREATION		

APPROVED BY
CITY ENGINEER
DATE 3/15/11

DESIGN W.O. – 0911041
CONSTRUCTION W.O. – 1015572

STORM DRAIN PLAN
JURUPA AVENUE EXTENSION PHASE II
HOLE CULVERT AND STORM DRAIN
STILLING BASIN DETAILS

D-725

SHEET 4 OF 11

HORIZ. SCALE: AS NOTED VERT. SCALE: 1"=4'

J.N. 7669

U:\Projects\City of Riverside\7669\Engineering\Storm Drain\SD04.dwg

PLOT DATE:3/10/2011 9:18 AM

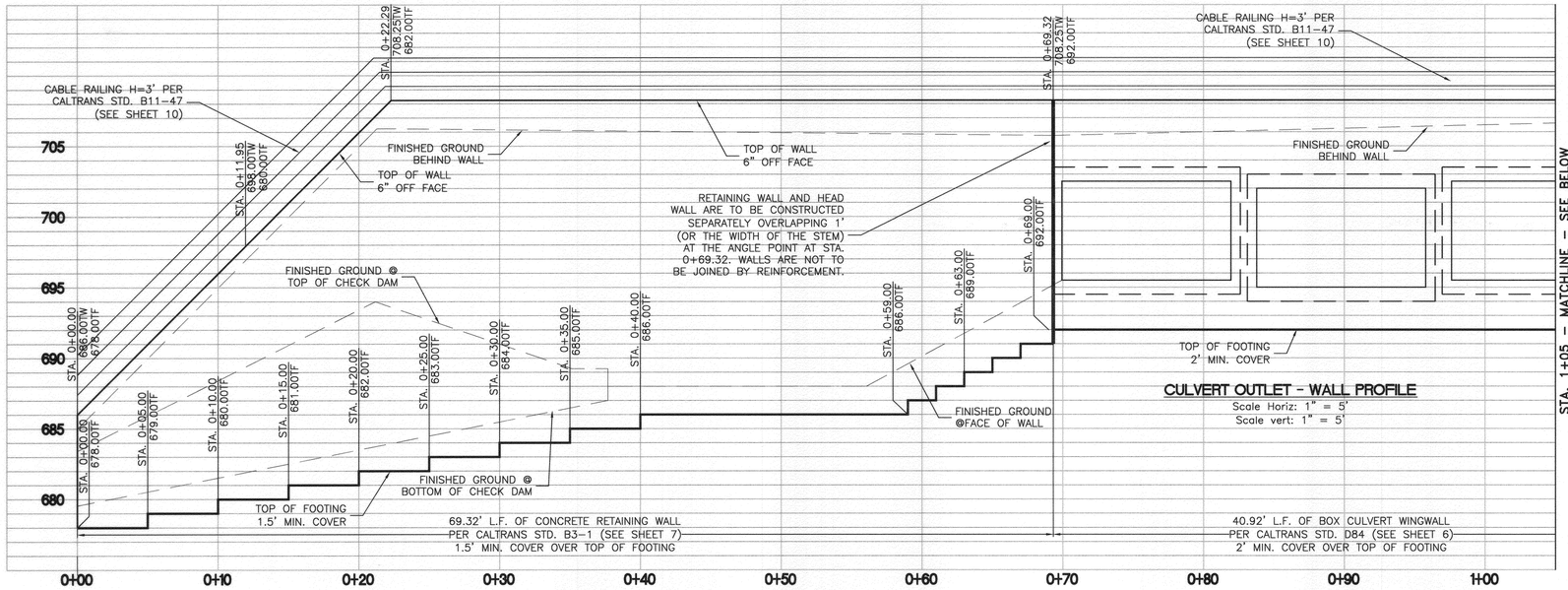

CULVERT OUTLET - WALL PROFILE

Scale Horiz: 1" = 5'
Scale vert: 1" = 5'

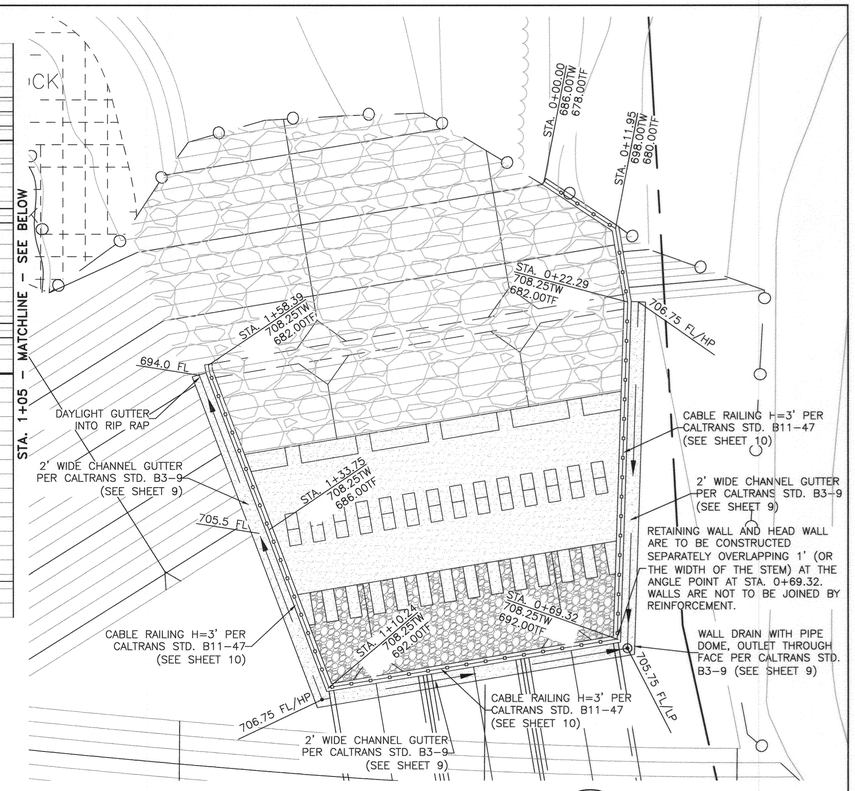

CULVERT OUTLET - WALL PLAN

Scale: 1" = 10'

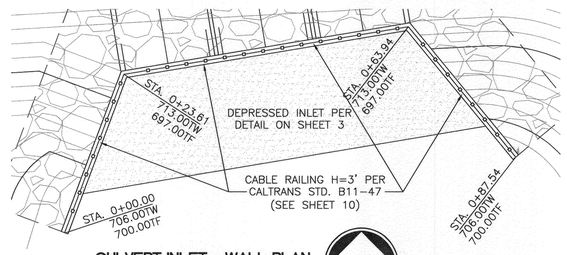

CULVERT INLET - WALL PLAN

Scale: 1" = 10'

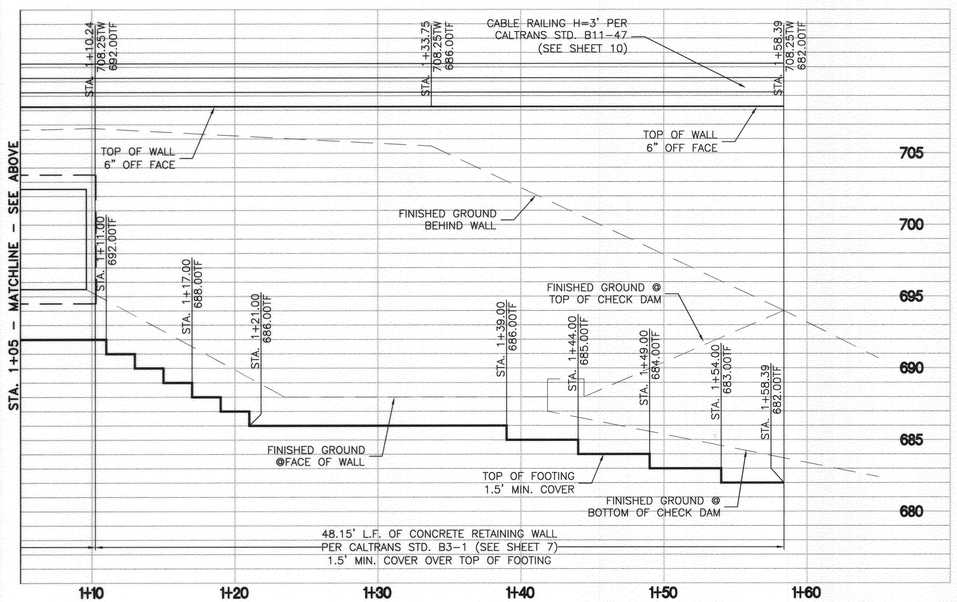

CULVERT OUTLET - WALL PROFILE

Scale Horiz: 1" = 5'
Scale vert: 1" = 5'

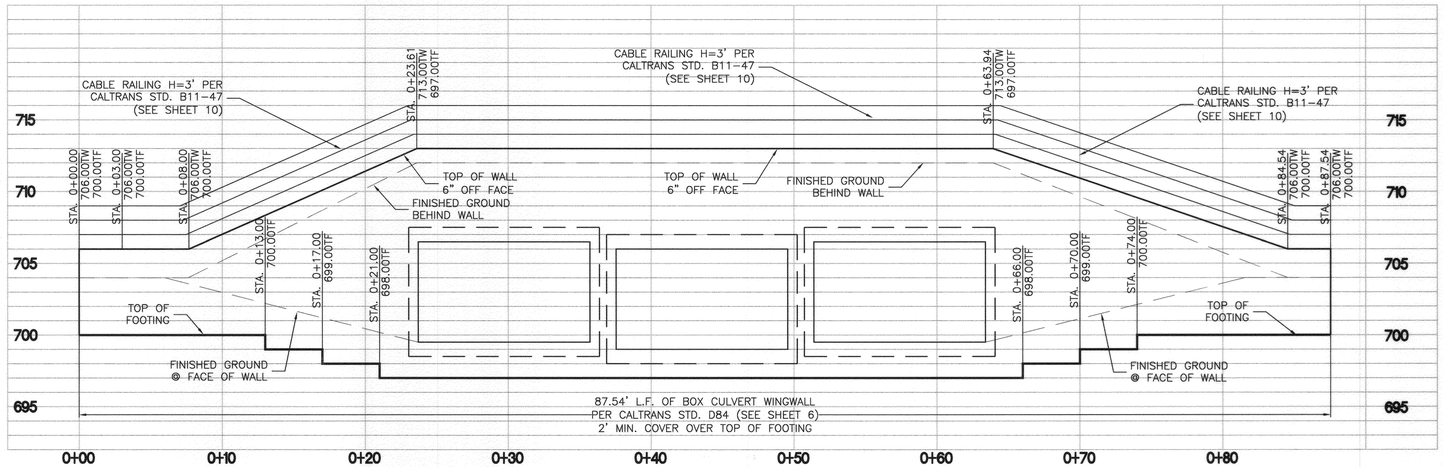

CULVERT INLET - WALL PROFILE

Scale Horiz: 1" = 5'
Scale vert: 1" = 5'

Know what's below. Call before you dig.

REGISTERED PROFESSIONAL ENGINEER CHARISSA J.A. LEACH NO. 53390 EXP. 6-30-11 CIVIL STATE OF CALIFORNIA

CITY OF RIVERSIDE BUSINESS TAX ACCT.#058833 EXP.1/1/12

PLANS PREPARED BY: adkan ENGINEERS
Civil Engineering · Surveying · Planning
6820 Airport Drive, Riverside, CA 92504
Tel:(951) 688-0241 Fax:(951) 688-0599
Under the Supervision of: 3-10-11
Charissa Leach, R.C.E. 53390 Exp. 06.30.11 Date:

BENCHMARK: G3-F2
CITY OF RIVERSIDE BENCHMARK No. G3-F2 BRASS DISK IN A MONUMENT WELL AT THE INTERSECTION OF ARLINGTON AVENUE AND VAN BUREN BOULEVARD

ELEVATION: 736.332

MARK	REVISIONS	APPR.	DATE

DESIGNED BY: MITCH DRAWN BY: R.D.R. CHECKED BY: C-

CITY OF RIVERSIDE
PUBLIC WORKS DEPARTMENT

APPROVED BY	DATE	BY
PRINCIPAL ENGINEER	3-10-11	
TRAFFIC DIVISION		
CONSTRUCTION ADMIN.	3/15/11	
SURVEYOR		3/16/11
LANDSCAPE		
PARK & RECREATION		

APPROVED BY: CITY ENGINEER
DATE 3/15/11

DESIGN W.O. - 0911041
CONSTRUCTION W.O. - 1015572

STORM DRAIN PLAN
JURUPA AVENUE EXTENSION PHASE II
HOLE CULVERT AND STORM DRAIN
CULVERT WALL PLAN AND PROFILE

D-725
SHEET 5 OF 11

HORIZ. SCALE: AS NOTED VERT. SCALE: 1"=4'
J.N. 7669

PLOT DATE:3/10/2011 9:17 AM
U:\Projects\City of Riverside\7669\Engineering\Storm Drain\SD05.dwg

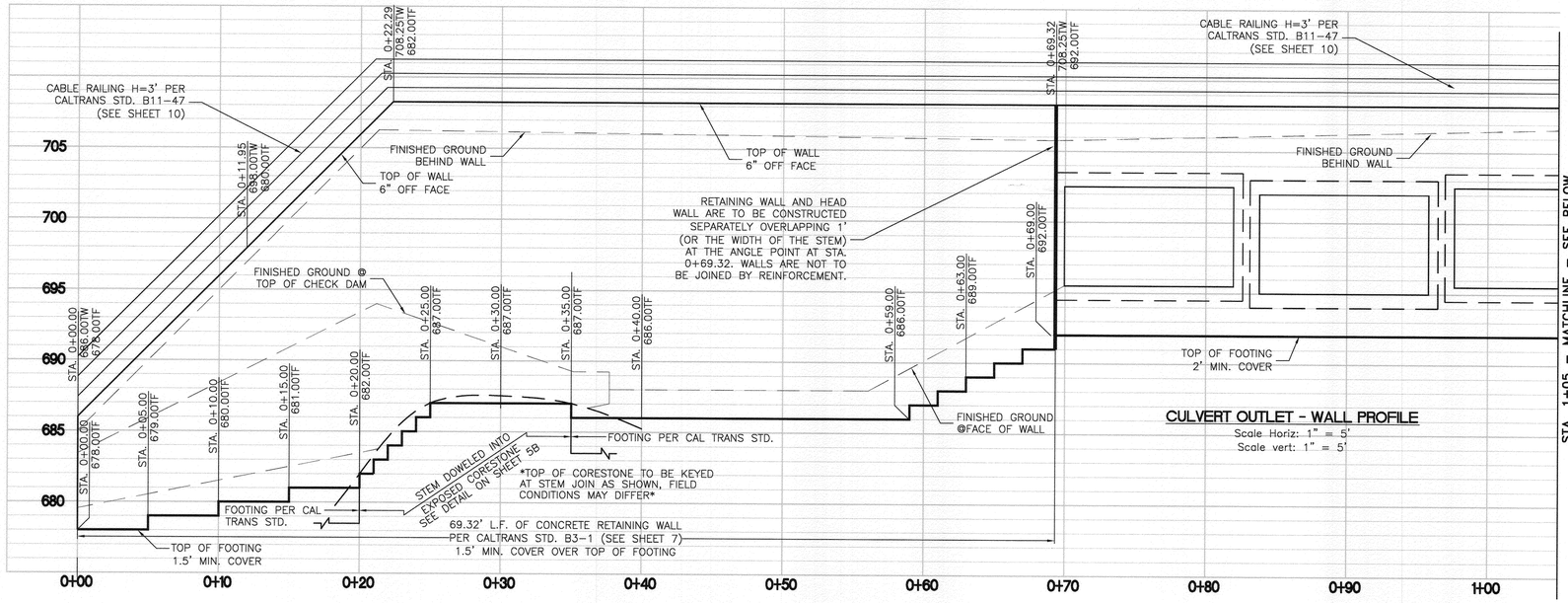

CULVERT OUTLET - WALL PROFILE

Scale Horiz: 1" = 5'
Scale vert: 1" = 5'

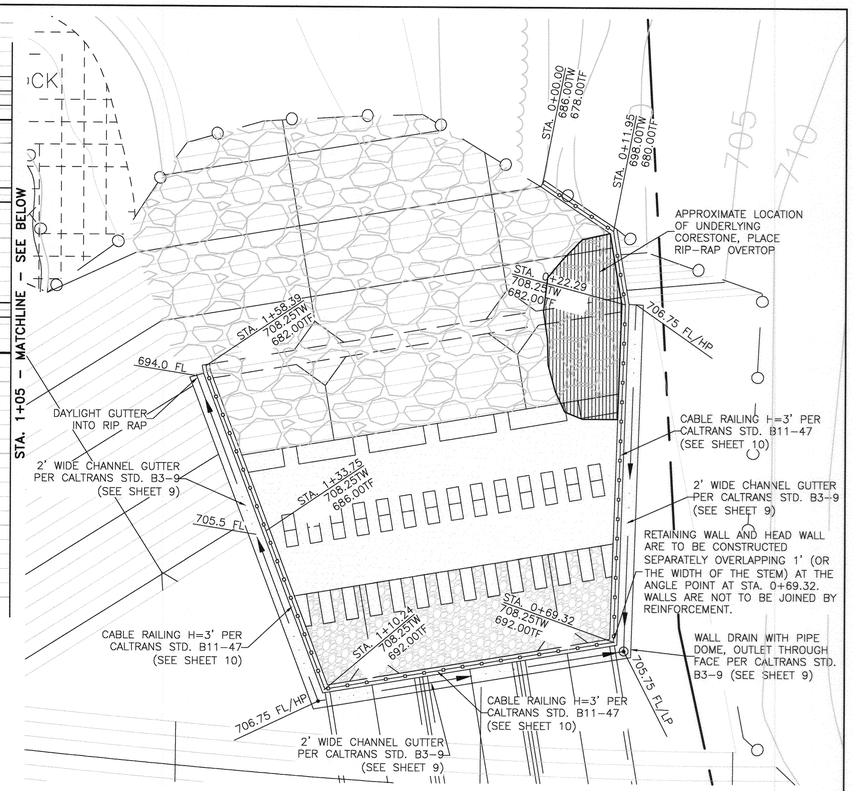

CULVERT OUTLET - WALL PLAN

Scale: 1" = 10'

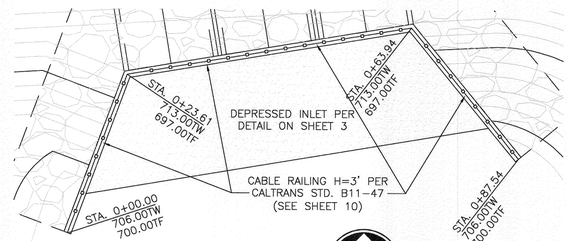

CULVERT INLET - WALL PLAN

Scale: 1" = 10'

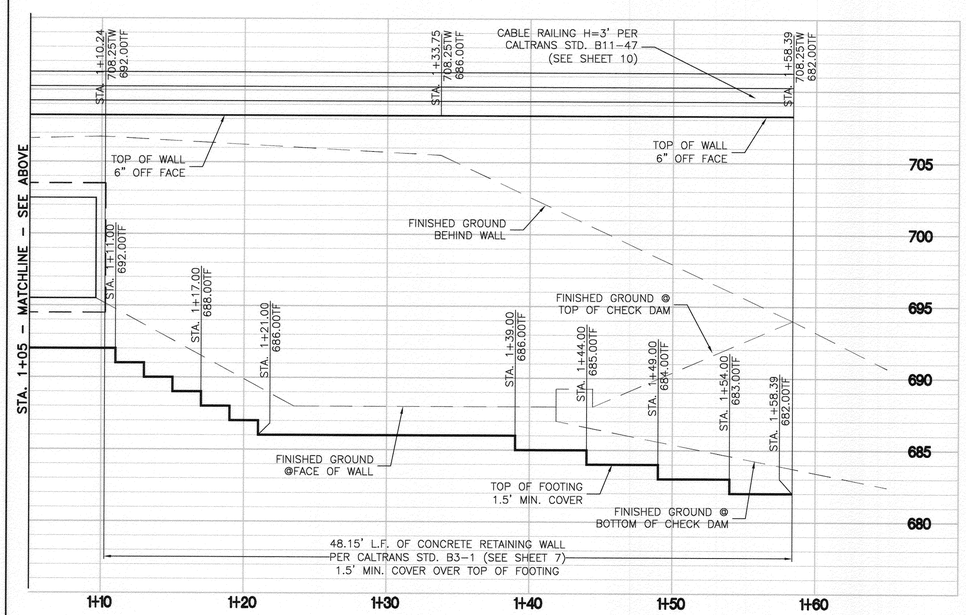

CULVERT OUTLET - WALL PROFILE

Scale Horiz: 1" = 5'
Scale vert: 1" = 5'

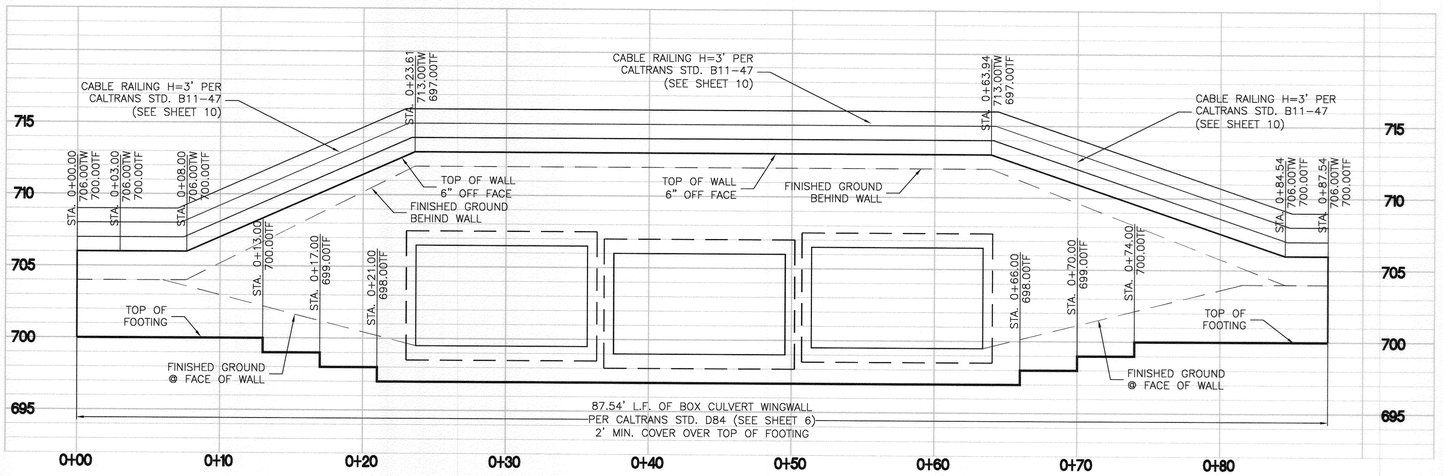

CULVERT INLET - WALL PROFILE

Scale Horiz: 1" = 5'
Scale vert: 1" = 5'

811 Know what's below. Call before you dig.

REGISTERED PROFESSIONAL ENGINEER CHARISSA J.A. LEACH NO. 53390 EXP. 6-30-11 CIVIL STATE OF CALIFORNIA

CITY OF RIVERSIDE BUSINESS TAX ACCT.#058833 EXP.1/1/12

PLANS PREPARED BY: adkan ENGINEERS
Civil Engineering · Surveying · Planning
6820 Airport Drive, Riverside, CA 92504
Tel:(951) 688-0241 · Fax:(951) 688-0599
Under the Supervision of: Charissa Leach, R.C.E. 53390 Exp. 06.30.11 Date:

BENCHMARK: G3-F2
CITY OF RIVERSIDE BENCHMARK No. G3-F2 BRASS DISK IN A MONUMENT WELL AT THE INTERSECTION OF ARLINGTON AVENUE AND VAN BUREN BOULEVARD

ELEVATION: 736.332

MARK	REVISIONS	APPR.	DATE

DESIGNED BY: MITCH DRAWN BY: R.D.R. CHECKED BY: C-

CITY OF RIVERSIDE
PUBLIC WORKS DEPARTMENT

APPROVED BY	DATE	BY
PRINCIPAL ENGINEER		
TRAFFIC DIVISION		
CONSTRUCTION ADMIN.		
SURVEYOR		
LANDSCAPE		
PARK & RECREATION		

APPROVED BY
CITY ENGINEER
DATE

DESIGN W.O. - 0911041
CONSTRUCTION W.O. - 1015572

STORM DRAIN PLAN
JURUPA AVENUE EXTENSION PHASE II
HOLE CULVERT AND STORM DRAIN
CULVERT WALL PLAN AND PROFILE

D-725
SHEET 5A OF 11

HORIZ. SCALE: AS NOTED VERT. SCALE: 1"=4'
J.N. 7669

U:\Projects\City of Riverside\7669\Engineering\Storm Drain\SD05Rev.dwg

PLOT DATE:1/11/2012 8:40 AM

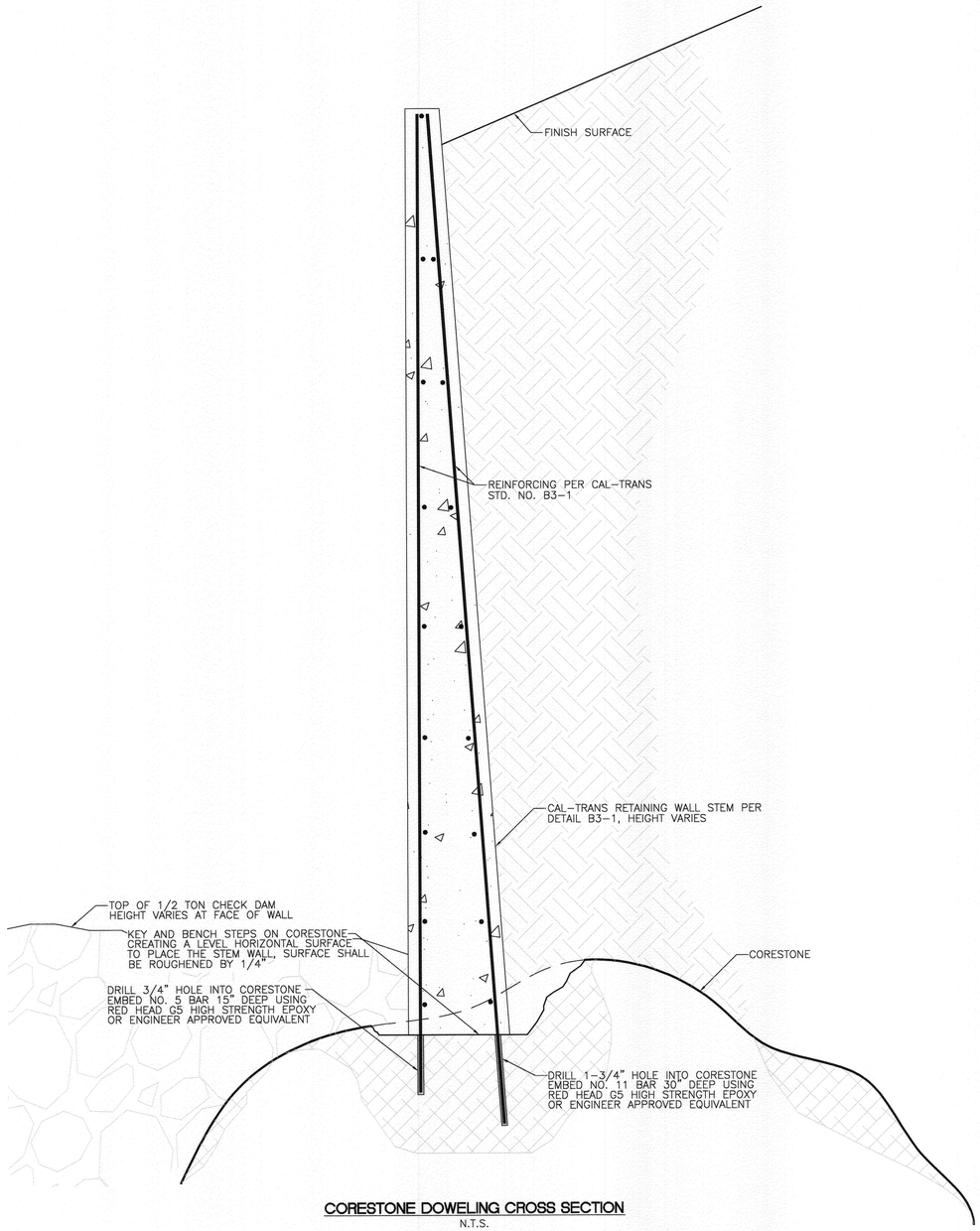

CORESTONE DOWELING CROSS SECTION
N.T.S.

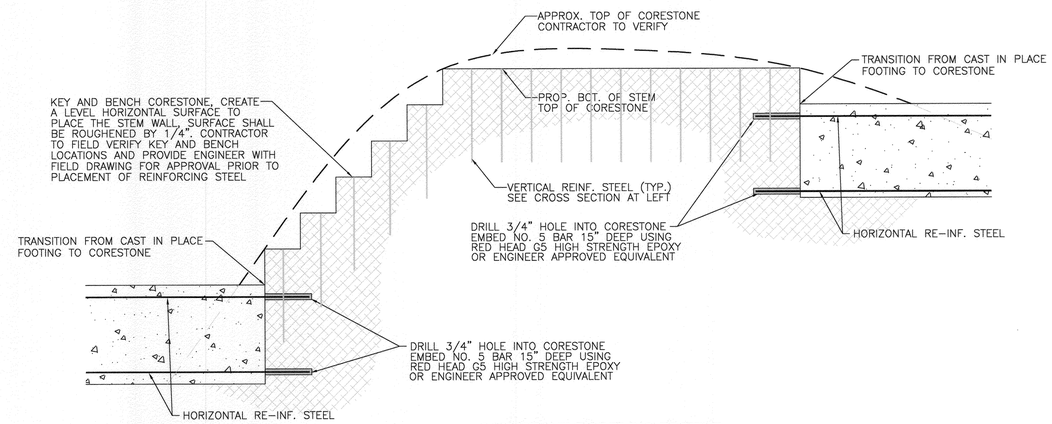

CORESTONE DOWELING PROFILE
N.T.S.

CITY OF RIVERSIDE BUSINESS TAX ACCT.#058833 EXP.1/1/12

811 Know what's below. Call before you dig.

REGISTERED PROFESSIONAL ENGINEER CHARISSA J.A. LEACH NO. 53390 EXP. 6-30-11 CIVIL STATE OF CALIFORNIA

PLANS PREPARED BY:
adkan ENGINEERS
Civil Engineering · Surveying · Planning
6820 Airport Drive, Riverside, CA 92504
Tel:(951) 688-0241 · Fax:(951) 688-0599

Under the Supervision of: Charissa Leach, R.C.E. 53390 Exp. 06.30.11 Date:

BENCHMARK: G3-F2
CITY OF RIVERSIDE BENCHMARK No. G3-F2 BRASS DISK IN A MONUMENT WELL AT THE INTERSECTION OF ARLINGTON AVENUE AND VAN BUREN BOULEVARD

ELEVATION: 736.332

MARK	REVISIONS	APPR.	DATE

DESIGNED BY: MITCH DRAWN BY: R.D.R. CHECKED BY: C-

CITY OF RIVERSIDE
PUBLIC WORKS DEPARTMENT

APPROVED BY	DATE	BY
PRINCIPAL ENGINEER		
TRAFFIC DIVISION		
CONSTRUCTION ADMIN.		
SURVEYOR		
LANDSCAPE		
PARK & RECREATION		

APPROVED BY
CITY ENGINEER
DATE

STORM DRAIN PLAN
JURUPA AVENUE EXTENSION
PHASE II
HOLE CULVERT AND STORM DRAIN
CORESTONE DETAILS

HORIZ. SCALE: AS NOTED VERT. SCALE: 1"=4'

D-725
SHEET 5B OF 11
J.N. 7669

DESIGN W.O. - 0911041
CONSTRUCTION W.O. - 1015572

PLOT DATE:1/11/2012 8:45 AM

U:\Projects\City of Riverside\7669\Engineering\Storm Drain\SD05Rev.dwg

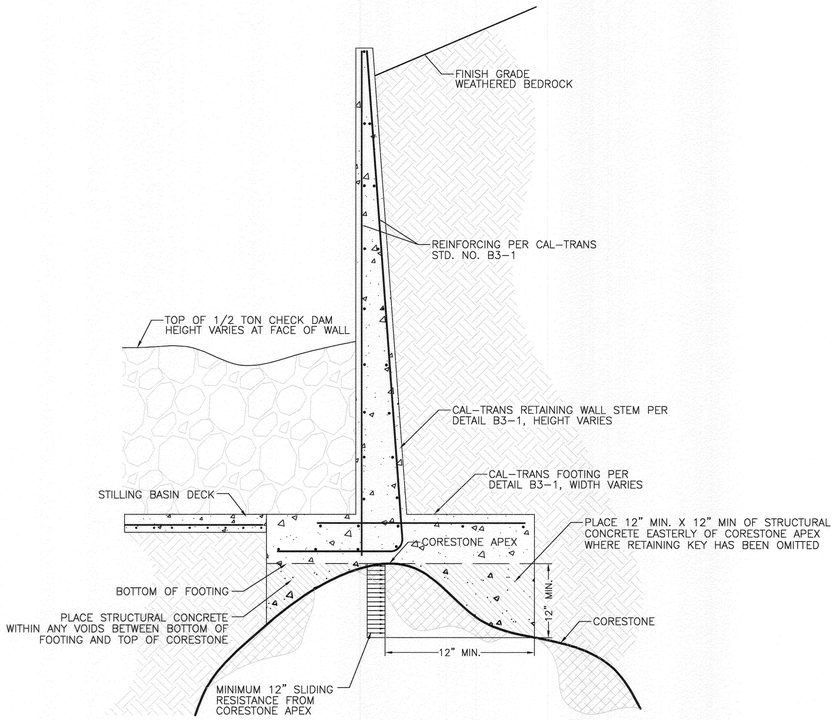

KEYWAY OMISSION DETAIL
N.T.S.

CITY OF RIVERSIDE BUSINESS TAX ACCT.#058833 EXP.1/1/12

Know what's below. Call before you dig.

REGISTERED PROFESSIONAL ENGINEER CHARISSA J.A. LEACH NO. 53390 EXP. 6-30-11 CIVIL STATE OF CALIFORNIA

PLANS PREPARED BY:
adkan ENGINEERS
Civil Engineering · Surveying · Planning
6820 Airport Drive, Riverside, CA 92504
Tel:(951) 688-0241 · Fax:(951) 688-0599
Under the Supervision of: Charissa Leach, R.C.E. 53390 Exp. 06.30.11 Date:

BENCHMARK: G3-F2
CITY OF RIVERSIDE BENCHMARK No. G3-F2
BRASS DISK IN A MONUMENT WELL AT THE INTERSECTION OF ARLINGTON AVENUE AND VAN BUREN BOULEVARD

ELEVATION: 736.332

MARK	REVISIONS	APPR.	DATE

DESIGNED BY: MITCH DRAWN BY: R.D.R. CHECKED BY: C-

CITY OF RIVERSIDE
PUBLIC WORKS DEPARTMENT

APPROVED BY	DATE	BY
PRINCIPAL ENGINEER		
TRAFFIC DIVISION		
CONSTRUCTION ADMIN.		
SURVEYOR		
LANDSCAPE		
PARK & RECREATION		

APPROVED BY
CITY ENGINEER
DATE

DESIGN W.O. - 0911041
CONSTRUCTION W.O. - 1015572

STORM DRAIN PLAN
JURUPA AVENUE EXTENSION
PHASE II
HOLE CULVERT AND STORM DRAIN
CORESTONE DETAILS

D-725
SHEET 5C OF 11

HORIZ. SCALE: AS NOTED VERT. SCALE: 1"=4'
J.N. 7669

PLOT DATE:1/23/2012 4:30 PM
U:\Projects\City of Riverside\7669\Engineering\Storm Drain\SD05RevKEYWAY.dwg

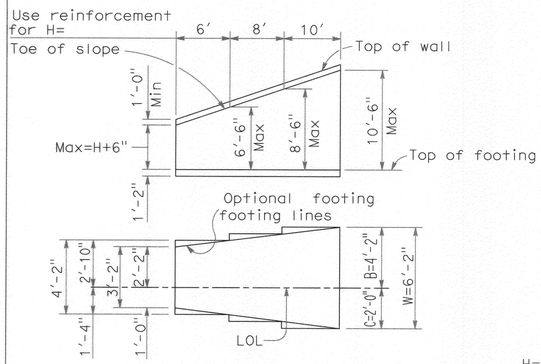

TYPICAL LAYOUT EXAMPLE

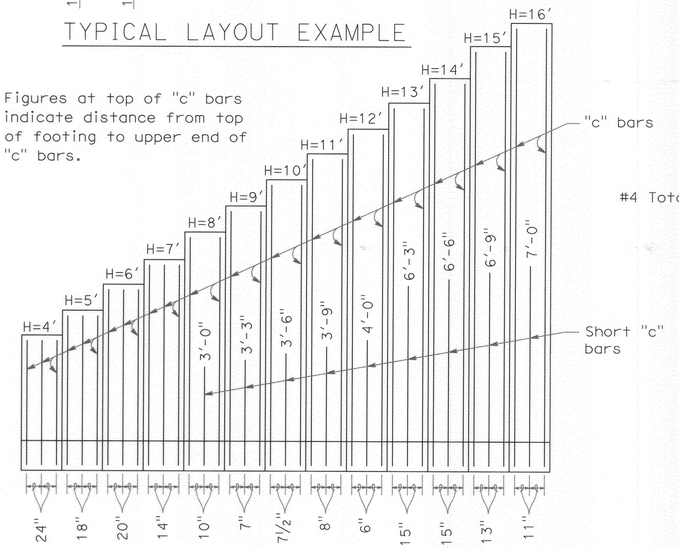

NOTE:

Where 1½:1 surcharge exceeds 5'-0", use Type 2 Retaining Wall.

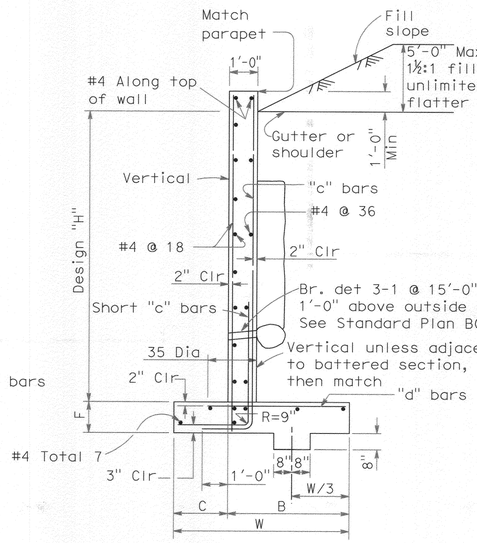

TYPICAL SECTION
H=4' THRU 12'

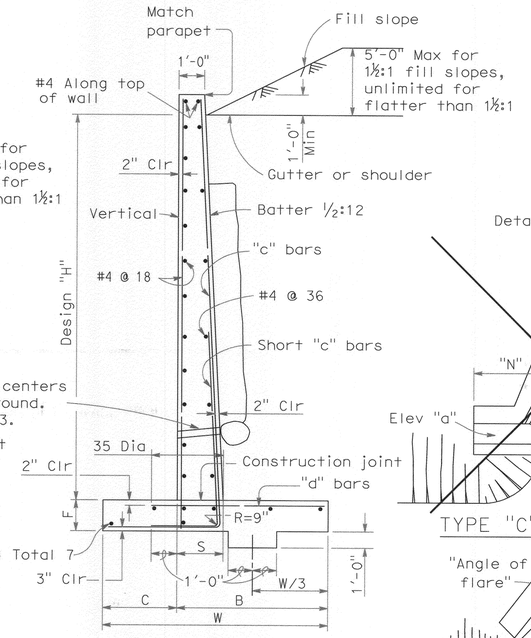

TYPICAL SECTION
H=13' THRU 16'

The State of California or its officers or agents shall not be responsible for the accuracy or completeness of electronic copies of this plan sheet.

To get to the Caltrans web site, go to: http://www.dot.ca.gov

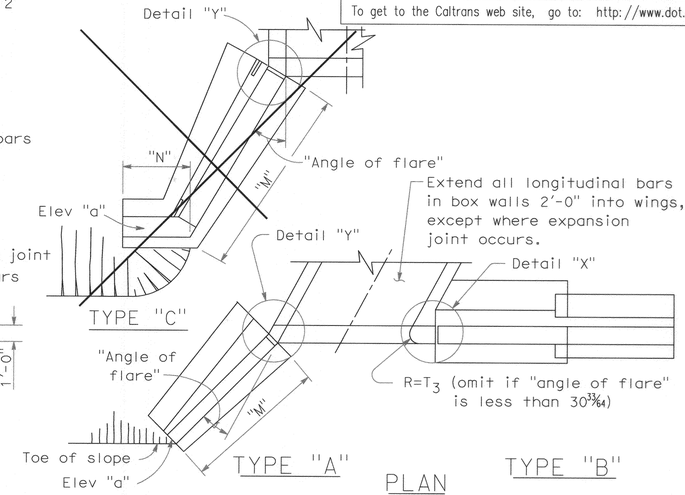

Where design "H" exceeds 9'-0" or length of wingwall exceeds 1.5 "H", place ½" Exp joint filler at junction of box and wall.

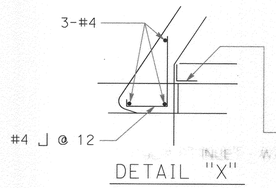

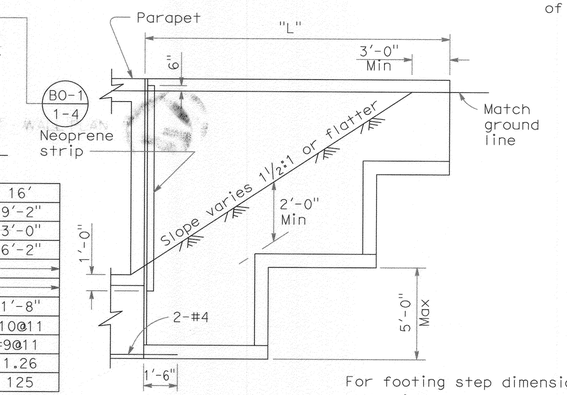

For footing step dimensions and reinforcement, see "Footing Step" on Std Plan B3-8.

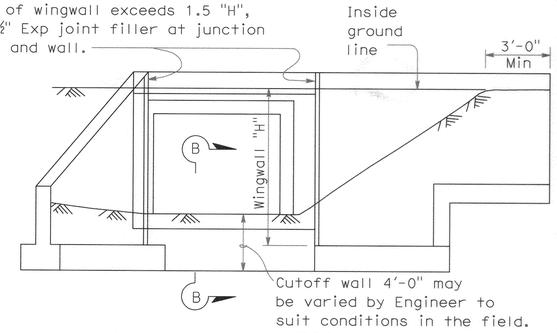

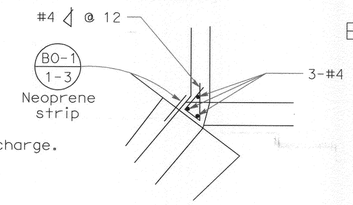

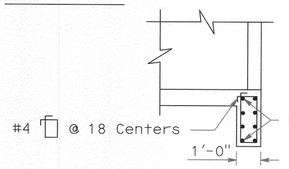

REINFORCED CONCRETE WINGWALLS

"H"	4'	5'	6'	7'	8'	9'	10'	11'	12'	13'	14'	15'	16'
W	3'-2"	3'-8"	4'-2"	4'-8"	5'-2"	5'-8"	6'-2"	6'-8"	7'-2"	7'-8"	8'-2"	8'-8"	9'-2"
C	1'-0"	1'-2"	1'-4"	1'-6"	1'-8"	1'-10"	2'-0"	2'-2"	2'-4"	2'-6"	2'-8"	2'-10"	3'-0"
B	2'-2"	2'-6"	2'-10"	3'-2"	3'-6"	3'-10"	4'-2"	4'-6"	4'-10"	5'-2"	5'-6"	5'-10"	6'-2"
F	1'-2"												
Batter	None									½:12			
S	1'-0"	1'-0"	1'-0"	1'-0"	1'-0"	1'-0"	1'-0"	1'-0"	1'-0"	1'-6½"	1'-7"	1'-7½"	1'-8"
"c" Bars	#4@24	#4@18	#5@20	#5@14	@5@10	#5@7	#6@7½	#7@8	#7@6	#9@15	#10@15	#10@13	#10@11
"d" Bars	#4@24	#4@18	#5@20	#5@14	@5@10	#6@14	#7@15	#8@16	#7@12	#8@15	#9@15	#9@13	#9@11
Conc CY/LF	0.32	0.38	0.44	0.49	0.55	0.61	0.67	0.73	0.79	1.02	1.10	1.18	1.26
Reinf LB/LF	13	16	19	25	30	37	49	62	76	73	90	104	125

Quantities do not include that portion above the design "H" limit.

NOTES:

Unit Stresses: f =24,000 psi, f =1300 psi, n=10

Maximum Toe Pressure = 1½ Tons/SQFT

Elevations, length and angle of flare of wings may be varied by the Engineer to suit conditions encountered in the field. Walls designed for 2'-0" liveload surcharge, 1½:1 sloping surcharge not to exceed 5'-0" in elevation plus 2'-0" liveload surcharge, or unlimited 2:1 surcharge.

Dimensions "H","L","M","N", Elevation "a" and "Angle of flare" (as apply) are shown on the plans.

Wall height may be exceeded by 6" before going to next greater "H".

Eliminate cutoff wall if adjacent channel is paved and skew is 20° maximum.

For wall offset values, see Standard Plan B3-8.

STATE OF CALIFORNIA
DEPARTMENT OF TRANSPORTATION

BOX CULVERT WINGWALLS TYPES A, B AND C

NO SCALE

D84

2006 STANDARD PLAN D84

DESIGN W.O. – 0911041
CONSTRUCTION W.O. – 1015572

30 0 30 60 90
Scale 1" = 30'

811 Know what's below. Call before you dig.

CITY OF RIVERSIDE BUSINESS TAX ACCT.#058833 EXP.1/1/12

REGISTERED PROFESSIONAL ENGINEER CHARISSA J.A. LEACH NO. 53390 EXP. 6-30-11 CIVIL STATE OF CALIFORNIA

PLANS PREPARED BY: adkan ENGINEERS
Civil Engineering · Surveying · Planning
6820 Airport Drive, Riverside, CA 92504
Tel:(951) 688-0241 Fax:(951) 688-0599
Under the Supervision of: Charissa Leach, R.C.E. 53390 Exp. 06.30.11 Date: 3-10-11

BENCHMARK: G3-F2
CITY OF RIVERSIDE BENCHMARK No. G3-F2 BRASS DISK IN A MONUMENT WELL AT THE INTERSECTION OF ARLINGTON AVENUE AND VAN BUREN BOULEVARD

ELEVATION: 736.332

MARK	REVISIONS	APPR.	DATE

DESIGNED BY: MITCH DRAWN BY: R.D.R. CHECKED BY: C–

CITY OF RIVERSIDE
PUBLIC WORKS DEPARTMENT

APPROVED BY	DATE	BY
PRINCIPAL ENGINEER	3-14-11	
TRAFFIC DIVISION	3-14-11	
CONSTRUCTION ADMIN.	3/14/11	
SURVEYOR	3/14/11	
LANDSCAPE		
PARK & RECREATION		

APPROVED BY
CITY ENGINEER
DATE 3/15/11

STORM DRAIN PLAN
JURUPA AVENUE EXTENSION PHASE II
HOLE CULVERT AND STORM DRAIN
WALL STRUCTURAL DETAILS

D-725
SHEET 6 OF 11
HORIZ. SCALE: AS NOTED VERT. SCALE: 1"=4'
J.N. 7669

U:\Projects\City of Riverside\7669\Engineering\Storm Drain\SD06.dwg
PLOT DATE:3/10/2011 9:15 AM

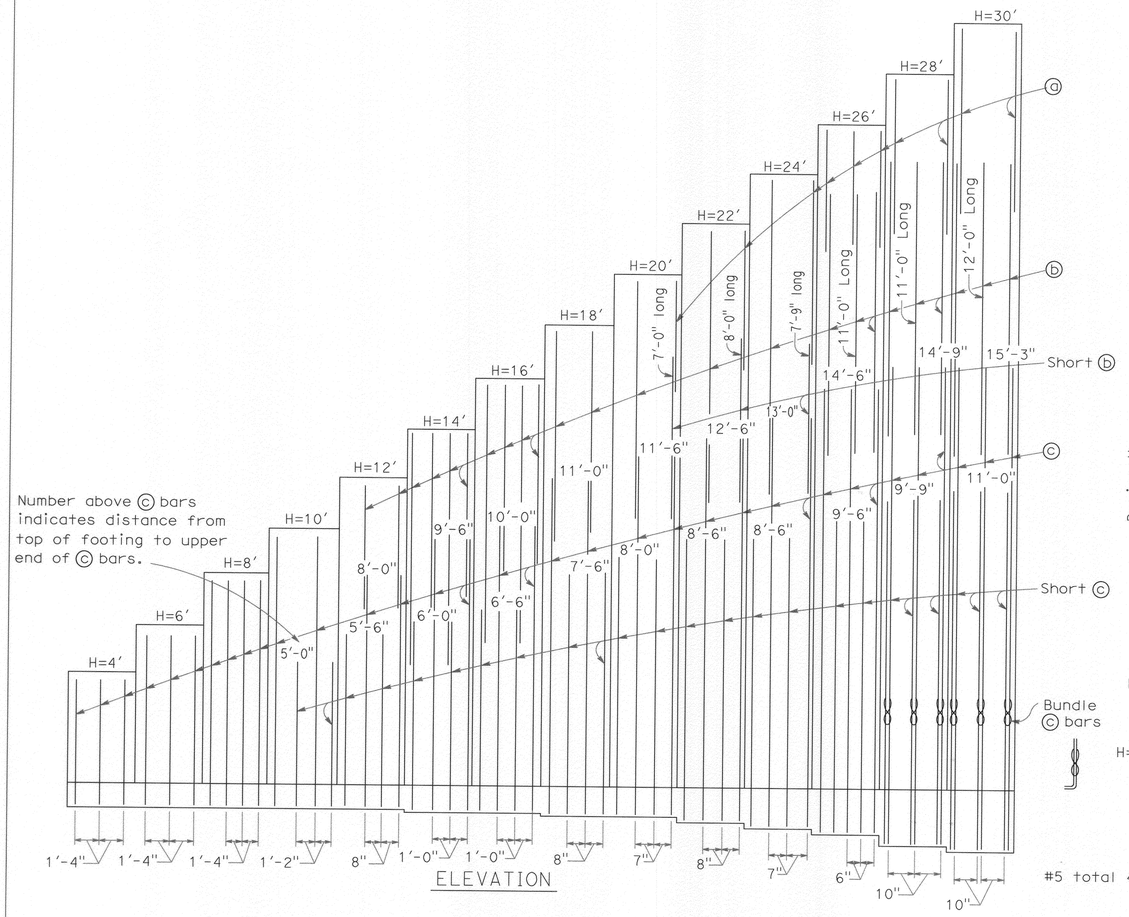

ELEVATION

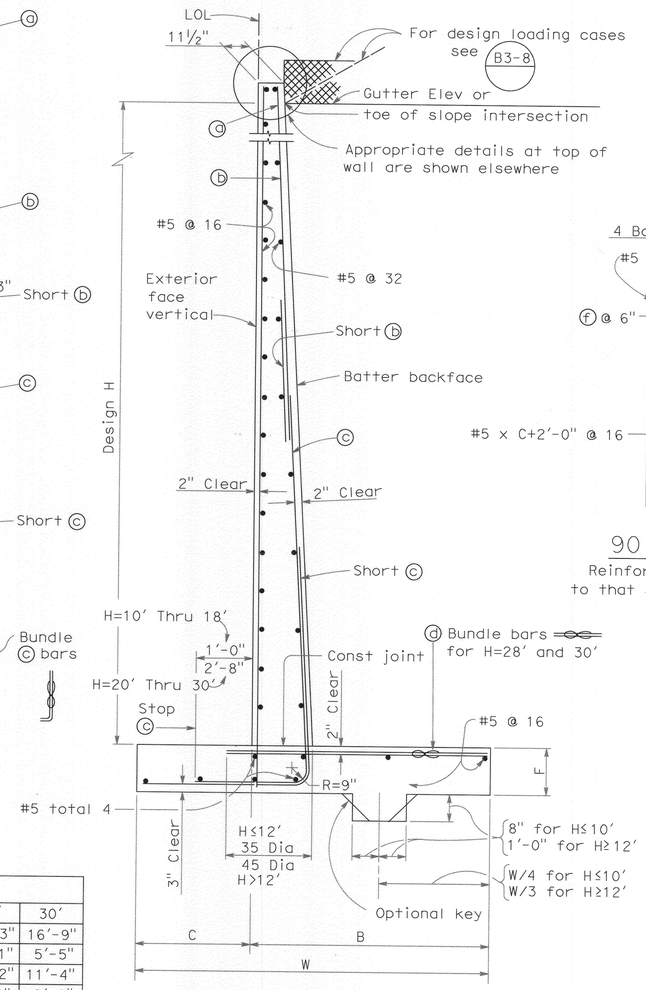

SPREAD FOOTING SECTION

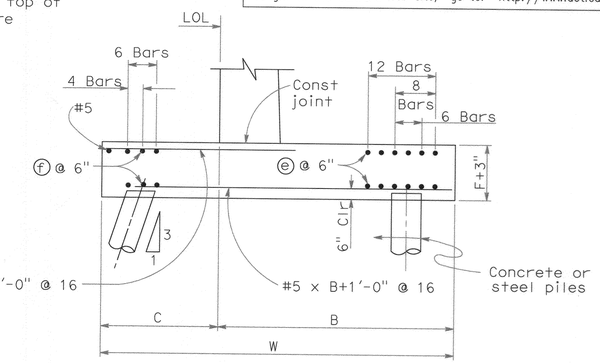

90 KIP PILE FOOTING SECTION

Reinforcement detailed is to be placed in addition to that shown for spread footing. All piles not shown, see pile layout on other sheets.

The State of California or its officers or agents shall not be responsible for the accuracy or completeness of electronic copies of this plan sheet.

To get to the Caltrans web site, go to: http://www.dot.ca.gov

2006 STANDARD PLAN B3-1

TABLE OF REINFORCING STEEL DIMENSIONS AND DATA

Design H		4′	6′	8′	10′	12′	14′	16′	18′	20′	22′	24′	26′	28′	30′
W		3′-3"	4′-3"	5′-3"	6′-3"	7′-3"	8′-0"	9′-0"	10′-0"	11′-0"	12′-1"	13′-3"	14′-3"	15′-3"	16′-9"
C		1′-0"	1′-4"	1′-8"	2′-0"	2′-4"	2′-7"	2′-11"	3′-3"	3′-7"	3′-11"	4′-5"	4′-9"	5′-1"	5′-5"
B		2′-3"	2′-11"	3′-7"	4′-3"	4′-11"	5′-5"	6′-1"	6′-9"	7′-5"	8′-2"	8′-10"	9′-6"	10′-2"	11′-4"
F		1′-4"	1′-4"	1′-4"	1′-4"	1′-4"	1′-6"	1′-6"	1′-6"	1′-6"	1′-8"	1′-10"	2′-2"	2′-6"	2′-9"
Batter		½:12	½:12	½:12	½:12	½:12	½:12	½:12	½:12	½:12	½:12	⅝:12	¾:12	¾:12	⅞:12
ⓐ bars		—	—	—	—	—	—	—	—	#5 @ 28	#5 @ 32	#5 @ 28	#5 @ 12	#5 @ 20	#8 @ 20
ⓑ bars		—	—	—	—	#5 @ 16	#5 @ 12	#5 @ 12	#6 @ 16	#8 @ 14	#8 @ 16	#8 @ 14	#8 @ 12	#8 @ 10	#9 @ 10
ⓒ bars		#5 @ 16	#5 @ 16	#5 @ 16	#6 @ 14	#6 @ 8	#8 @ 12	#9 @ 12	#9 @ 8	#9 @ 7	#11 @ 8	#11 @ 7	#11 @ 6	#11 @ 10 ⓧ	#11 @ 10 ⓧ
ⓓ bars		#5 @ 16	#5 @ 16	#5 @ 16	#5 @ 14	#5 @ 8	#8 @ 12	#9 @ 12	#9 @ 8	#9 @ 7	#11 @ 8	#11 @ 7	#11 @ 6	#11 @ 10 ⓧ	#11 @ 10 ⓧ
Total ⓔ bars		6-#6	6-#6	6-#6	12-#6	12-#6	12-#6	12-#6	8-#6	8-#6	8-#6	6-#6	6-#6	6-#6	6-#6
Total ⓕ bars		—	—	—	6-#6	6-#6	6-#6	6-#6	6-#6	6-#6	6-#6	4-#5	4-#5	4-#5	4-#5
Loading Case I	Toe Pressure ksf	1.7	1.9	2.2	2.5	2.8	3.3	3.5	4.0	4.3	4.6	4.9	5.3	5.7	6.3
Loading Case II	Toe Pressure ksf	1.1	1.5	2.0	2.3	2.7	3.3	3.7	4.2	4.7	5.5	6.0	6.5	7.1	7.5
Loading Case III	Toe Pressure ksf	1.4	1.7	2.1	2.5	2.9	3.4	3.8	4.3	4.8	5.4	5.8	6.5	7.2	7.5

ⓧ Denotes a bundle of 2 bars

NOTES:

1. For details not shown and drainage notes see B3-8
2. For wall stem joint details see B0-3/3-3 and B0-3/3-4
3. For pile footing for design H=4′ use same footing dimensions as for design H=6′.

STATE OF CALIFORNIA
DEPARTMENT OF TRANSPORTATION

RETAINING WALL TYPE 1 H=4′ THROUGH 30′

NO SCALE

B3-1

DESIGN W.O. – 0911041
CONSTRUCTION W.O. – 1015572

30 0 30 60 90
Scale 1" = 30′

Know what's below. Call before you dig.

REGISTERED PROFESSIONAL ENGINEER CHARISSA J.A. LEACH NO. 53390 EXP. 6-30-11 CIVIL STATE OF CALIFORNIA

CITY OF RIVERSIDE BUSINESS TAX ACCT.#058833 EXP.1/1/12

PLANS PREPARED BY: adkan ENGINEERS
Civil Engineering · Surveying · Planning
6820 Airport Drive, Riverside, CA 92504
Tel:(951) 688-0241 Fax:(951) 688-0599
Under the Supervision of: Cherissa Leach, R.C.E. 53390 Exp. 06.30.11 Date: 3/10/11

BENCHMARK: G3-F2
CITY OF RIVERSIDE BENCHMARK No. G3-F2 BRASS DISK IN A MONUMENT WELL AT THE INTERSECTION OF ARLINGTON AVENUE AND VAN BUREN BOULEVARD

ELEVATION: 736.332

MARK	REVISIONS	APPR.	DATE

DESIGNED BY: MITCH DRAWN BY: R.D.R. CHECKED BY: C–

CITY OF RIVERSIDE
PUBLIC WORKS DEPARTMENT

APPROVED BY	DATE	BY
PRINCIPAL ENGINEER	3-11-11	
TRAFFIC DIVISION	3-11-11	
CONSTRUCTION ADMIN.	3/14/11	
SURVEYOR	3/15/11	
LANDSCAPE		
PARK & RECREATION		

APPROVED BY CITY ENGINEER
DATE 3/15/11

STORM DRAIN PLAN
JURUPA AVENUE EXTENSION PHASE II
HOLE CULVERT AND STORM DRAIN
WALL STRUCTURAL DETAILS

D–725
SHEET 7 OF 11
HORIZ. SCALE: AS NOTED VERT. SCALE: 1"=4′
J.N. 7669

PLOT DATE:3/10/2011 9:15 AM
U:\Projects\City of Riverside\7669\Engineering\Storm Drain\SD07.dwg

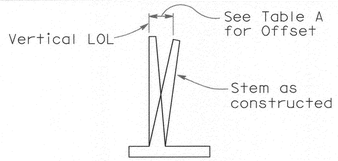

APPROXIMATE WALL OFFSET VALUES

Not required for wall Types 3 and 4. Values for offseting forms to be determined by the Engineer.

TABLE A

H	Offset
4'-12'	H/200
14'-16'	H/160
18'-20'	H/140
22'-24'	H/130
22'-24'	2½"

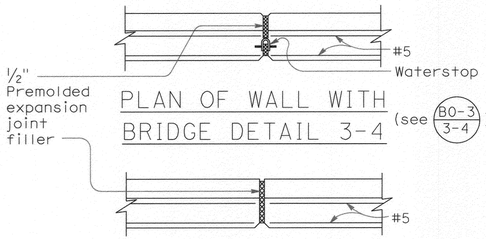

PLAN OF WALL WITH BRIDGE DETAIL 3-4

PLAN OF WALL WITH EXPANSION JOINT ONLY

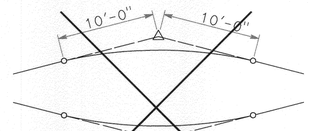

20'-0" VC AT TOP OF WALL SLOPE CHANGE

Where shown on the plans

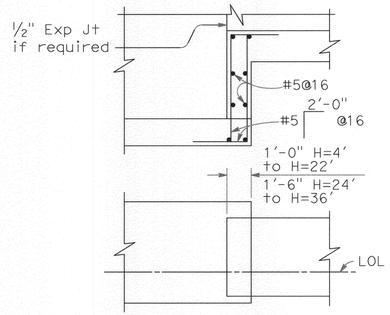

FOOTING STEP

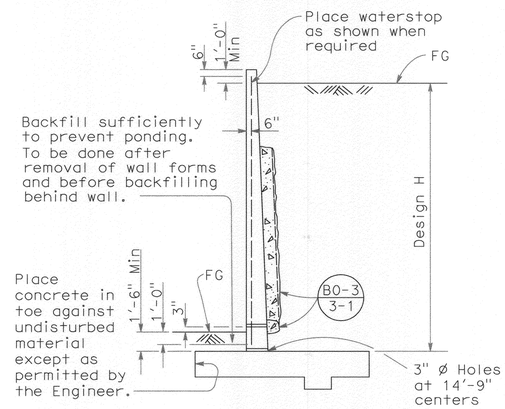

DESIGN AND DRAINAGE

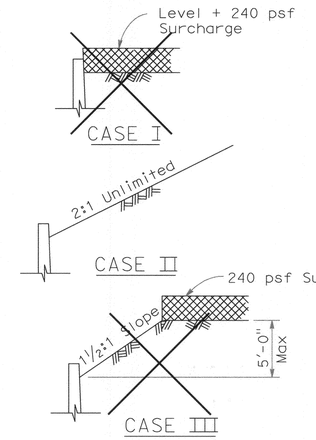

DETAIL OF DESIGN LOADING CASES

Case I Level + 240 psf surcharge
Case II 2:1 Unlimited slope
Case III 1½:1 Limited slope
5'-0" Max height)
+240 psf surcharge

NOTE: Surcharge Limits Shown Apply To Retaining Walls Type 1 and 3.

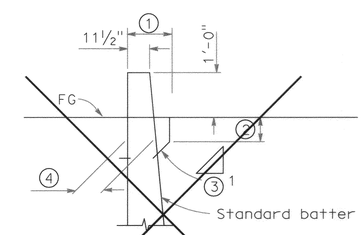

Dimensions 1, 2 and 3 to be as shown elsewhere in the Project Plans.

4 Stem width at base of haunch to be determined as shown.

STEM WIDTH AT BASE OF HAUNCH

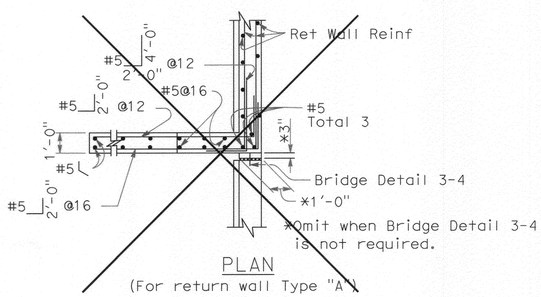

PLAN
(For return wall Type "A")

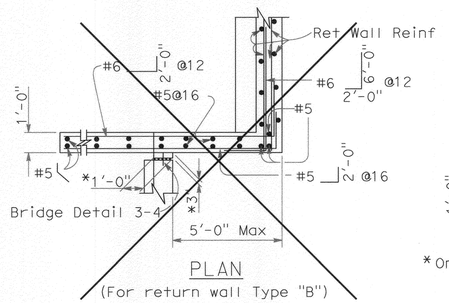

PLAN
(For return wall Type "B")

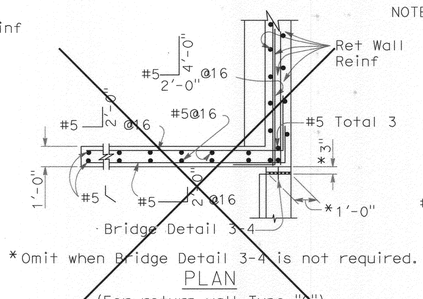

PLAN
(For return wall Type "C")

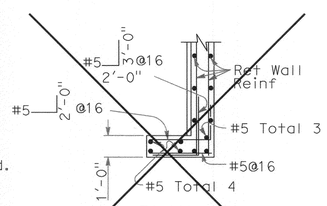

PLAN
(For return wall Type "D")

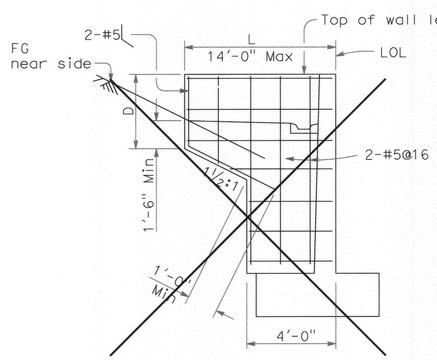

ELEVATION

RETURN WALL TYPE "A"

Use where H=8' or less

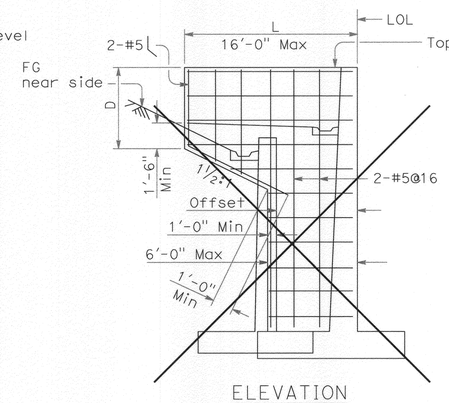

ELEVATION

RETURN WALL TYPE "B"

Use where H=10' or more on offset walls

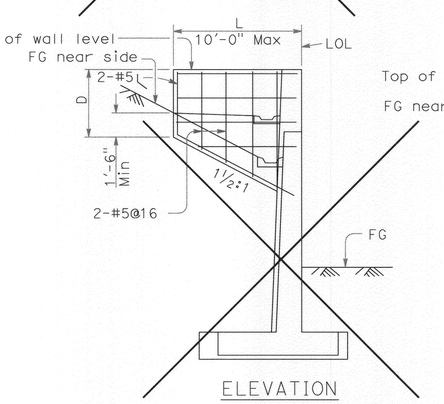

ELEVATION

RETURN WALL TYPE "C"

Use where H=10' or more on straight walls

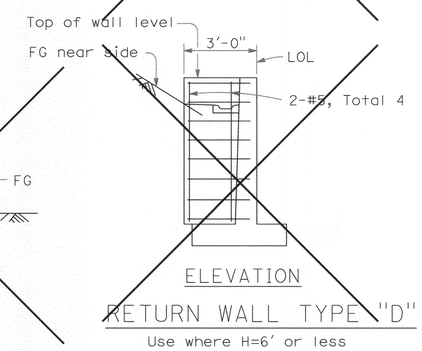

ELEVATION

RETURN WALL TYPE "D"

Use where H=6' or less

NOTES:

Design Conditions:

Design "H" may be exceeded by 6" before going to the next size. Special footing design is required where foundation material is incapable of supporting toe pressure listed in table.

Return wall not required unless shown elsewhere.

Design Data:

f_c = 1,450 psi f'_c = 3,600 psi f_s = 24,000 psi
n = 10 earth = 120 lb/ft³
240 psf surcharge:
Equivalent fluid pressure =
36 psf/Ft maximum for determination of toe pressure.
27 psf/Ft minimum for determination of heel pressure.

Earth pressures for 2:1 unlimited slope, 1½:1 slope, and 1½:1 unlimited slope, determined from Rankine's formula with ø=33°42'.

STATE OF CALIFORNIA
DEPARTMENT OF TRANSPORTATION

RETAINING WALL DETAILS No. 1

NO SCALE

The State of California or its officers or agents shall not be responsible for the accuracy or completeness of electronic copies of this plan sheet.

To get to the Caltrans web site, go to: http://www.dot.ca.gov

2006 STANDARD PLAN B3-8

B3-8

DESIGN W.O. – 0911041
CONSTRUCTION W.O. – 1015572

30 0 30 60 90
Scale 1" = 30'

Know what's below. Call before you dig.

REGISTERED PROFESSIONAL ENGINEER CHARISSA J.A. LEACH NO. 53390 EXP. 6-30-11 CIVIL STATE OF CALIFORNIA

CITY OF RIVERSIDE BUSINESS TAX ACCT.#058833 EXP.1/1/12

PLANS PREPARED BY: adkan ENGINEERS
Civil Engineering · Surveying · Planning
6820 Airport Drive, Riverside, CA 92504
Tel:(951) 688-0241 · Fax:(951) 688-0599
Under the Supervision of: 3-10-11
Charissa Leach, R.C.E. 53390 Exp. 06.30.11 Date:

BENCHMARK: G3-F2
CITY OF RIVERSIDE BENCHMARK No. G3-F2 BRASS DISK IN A MONUMENT WELL AT THE INTERSECTION OF ARLINGTON AVENUE AND VAN BUREN BOULEVARD

ELEVATION: 736.332

MARK	REVISIONS	APPR.	DATE

DESIGNED BY: MITCH DRAWN BY: R.D.R. CHECKED BY: C–

CITY OF RIVERSIDE
PUBLIC WORKS DEPARTMENT

	APPROVED BY	DATE	BY
PRINCIPAL ENGINEER	3-11-11		
TRAFFIC DIVISION	3-11-11		
CONSTRUCTION ADMIN.	3/14/11		
SURVEYOR		3/14/11	
LANDSCAPE			
PARK & RECREATION			

APPROVED BY: CITY ENGINEER
DATE 3/15/11

STORM DRAIN PLAN
JURUPA AVENUE EXTENSION PHASE II
HOLE CULVERT AND STORM DRAIN
WALL STRUCTURAL DETAILS

HORIZ. SCALE: AS NOTED VERT. SCALE: 1"=4'

D-725
SHEET 8 OF 11
J.N. 7669

U:\Projects\City of Riverside\7669\Engineering\Storm Drain\SD08.dwg

PLOT DATE:3/10/2011 9:15 AM

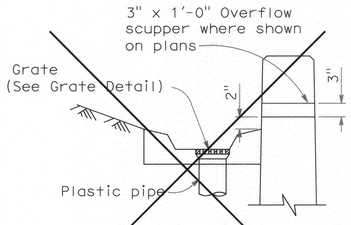

WALL DRAIN DETAIL

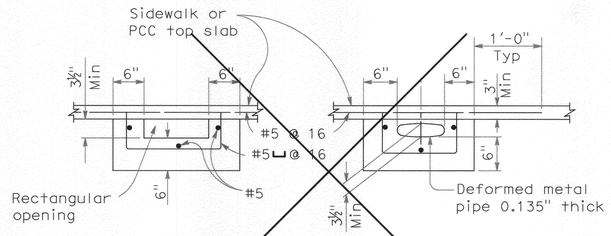

NOTE:

Area of opening to be not less than that of pipe from wall gutter. Make opening transition in wall. Edge opening in curb face to ¾" minimum radius.

OUTLET DETAIL - SECTION B-B

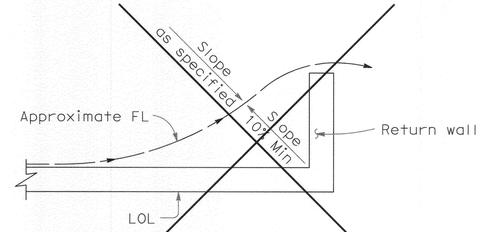

WALL DRAINAGE
WHERE GUTTER NOT REQUIRED

The State of California or its officers or agents shall not be responsible for the accuracy or completeness of electronic copies of this plan sheet.

To get to the Caltrans web site, go to: http://www.dot.ca.gov

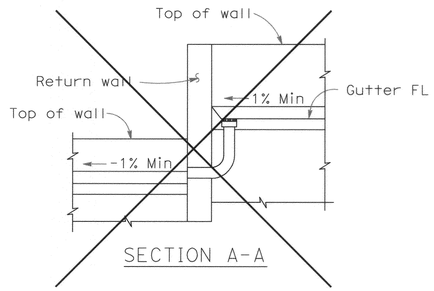

SECTION A-A

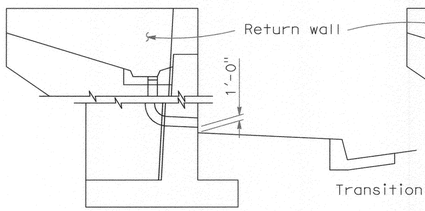

RETAINING WALL,
FACE OF WALL OUTLET

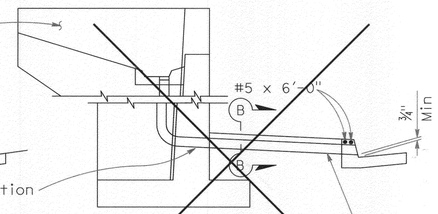

4" Plastic pipe when wall drain is 4" or less. For larger pipe see Outlet Detail-Section B-B.

RETAINING WALL, GUTTER OUTLET

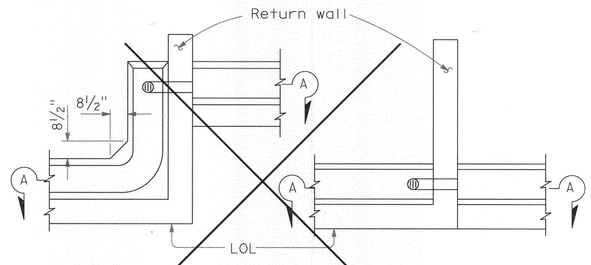

PLAN-OFFSET WALL PLAN-CONTINUOUS WALL

DRAIN THROUGH RETURN WALL

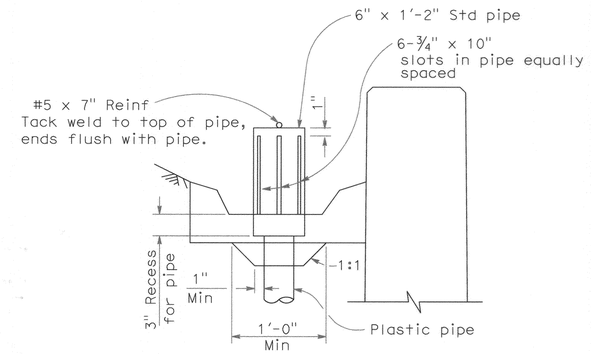

WALL DRAIN WITH PIPE DOME

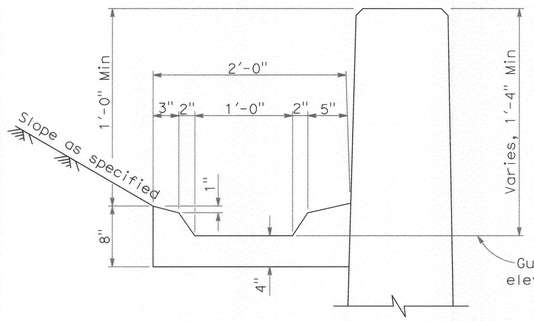

TYPICAL GUTTER DETAIL

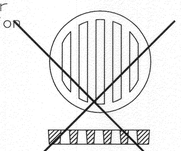

GRATE DETAIL

Sizes to fit standard hubs

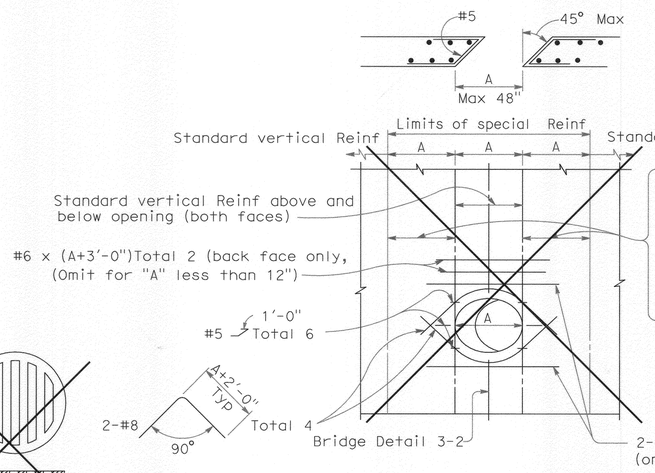

Standard vertical reinforcement plus additional vertical bars corresponding in size and number to bars cut by the opening. Place half on each side. Extend the additional bars into the footing the same as other vertical wall reinforcement and to a minimum of 60 bar diameters above the top of utility opening if wall height permits. Bundle bars as required.

Horizontal Reinf to be standard except as shown.

All Reinf to clear opening by 2" minimum.

Expansion joints shall not be located within the limits of special reinforcing.

RETAINING WALL UTILITY OPENING

Max size of opening (A) = 48"
To be used in conjunction with sheet B3-8

STATE OF CALIFORNIA
DEPARTMENT OF TRANSPORTATION

RETAINING WALL DETAILS No. 2

NO SCALE

2006 STANDARD PLAN B3-9

B3-9

DESIGN W.O. – 0911041
CONSTRUCTION W.O. – 1015572

30 0 30 60 90
Scale 1" = 30'

Know what's below. Call before you dig.

REGISTERED PROFESSIONAL ENGINEER CHARISSA J.A. LEACH NO. 53390 EXP. 6-30-11 CIVIL STATE OF CALIFORNIA

CITY OF RIVERSIDE BUSINESS TAX ACCT.#058833 EXP.1/1/12

PLANS PREPARED BY: adkan ENGINEERS
Civil Engineering · Surveying · Planning
6820 Airport Drive, Riverside, CA 92504
Tel:(951) 688-0241 · Fax:(951) 688-0599
Under the Supervision of: Charissa Leach, R.C.E. 53390 Exp. 06.30.11 Date: 3-10-11

BENCHMARK: G3-F2
CITY OF RIVERSIDE BENCHMARK No. G3-F2 BRASS DISK IN A MONUMENT WELL AT THE INTERSECTION OF ARLINGTON AVENUE AND VAN BUREN BOULEVARD

ELEVATION: 736.332

MARK	REVISIONS	APPR.	DATE

DESIGNED BY: MITCH DRAWN BY: R.D.R. CHECKED BY: C-

CITY OF RIVERSIDE
PUBLIC WORKS DEPARTMENT

APPROVED BY	DATE	BY
PRINCIPAL ENGINEER	3-11-11	
TRAFFIC DIVISION	3-11-11	
CONSTRUCTION ADMIN.	3/16/11	
SURVEYOR	03	3/16/11
LANDSCAPE		
PARK & RECREATION		

APPROVED BY
CITY ENGINEER
DATE 3/15/11

STORM DRAIN PLAN
JURUPA AVENUE EXTENSION PHASE II
HOLE CULVERT AND STORM DRAIN
WALL STRUCTURAL DETAILS

HORIZ. SCALE: AS NOTED VERT. SCALE: 1"=4'

D-725
SHEET 9 OF 11
J.N. 7669

U:\Projects\City of Riverside\7669\Engineering\Storm Drain\SD09.dwg

PLOT DATE:3/10/2011 9:15 AM

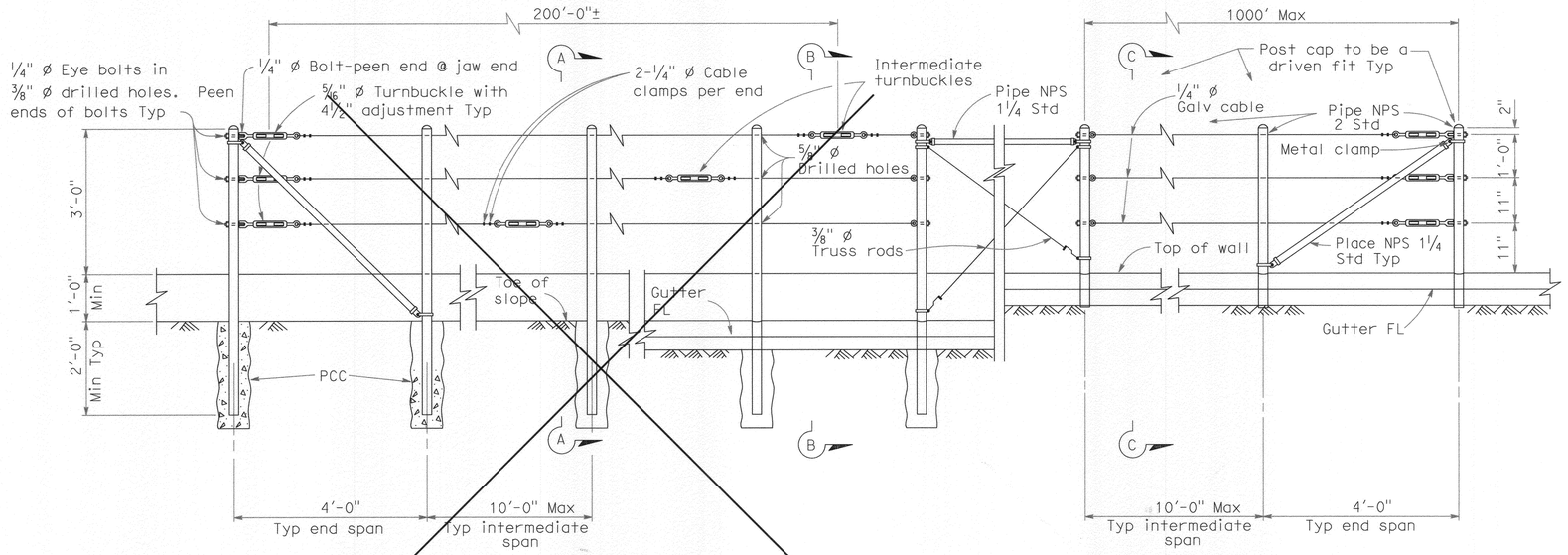

EXISTING WALL (WITHOUT GUTTER)
Existing

RETAINING WALL (WITH GUTTER)
Existing

RETAINING WALL (WITH GUTTER)
New construction

ELEVATION

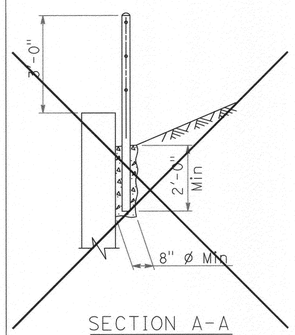

SECTION A-A
Existing

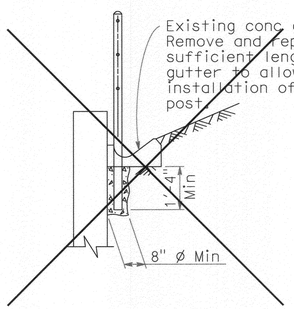

SECTION B-B
Existing

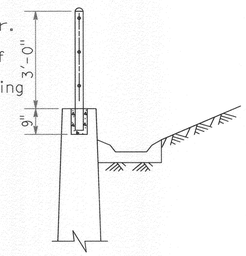

SECTION C-C
New construction

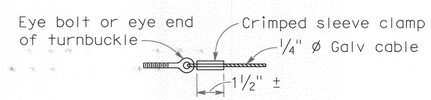

ALTERNATIVE CABLE CONNECTION

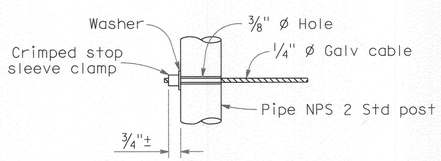

ALTERNATIVE DEAD END ANCHORAGE

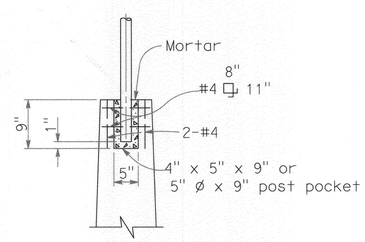

POST POCKET

The State of California or its officers or agents shall not be responsible for the accuracy or completeness of electronic copies of this plan sheet.

To get to the Caltrans web site, go to: http://www.dot.ca.gov

NOTES:

1. Maximum distance between turnbuckles shall be 200'-0"±.
2. Intermediate turnbuckles to be placed in adjacent spans.
3. Cable shall not be spliced between intermediate turnbuckles and end posts.
4. All posts, cable, and hardware to be galvanized.
5. Posts to be vertical.
6. Alignment of holes in posts may vary to conform to slope of top of retaining wall.
7. The Contractor shall verify all dependent dimensions in the field before ordering or fabricating any material.
8. Alternative details may be submitted by the Contractor for approval by the Engineer.
9. Line posts shall be braced horizontally and trussed diagonally in both directions at intervals not to exceed 1000'.
10. Post pockets to be centered in top of wall.
11. Typical end spans, braced in both directions, shall be constructed at changes in line where the angle of deflection is 15° or more.
12. Provide thimbles at all cable loops.

STATE OF CALIFORNIA
DEPARTMENT OF TRANSPORTATION

CABLE RAILING

NO SCALE

B11-47

2006 STANDARD PLAN B11-47

DESIGN W.O. – 0911041
CONSTRUCTION W.O. – 1015572

30 0 30 60 90
Scale 1" = 30'

Know what's below. Call before you dig.

REGISTERED PROFESSIONAL ENGINEER CHARISSA J.A. LEACH NO. 53390 EXP. 6-30-11 CIVIL STATE OF CALIFORNIA

CITY OF RIVERSIDE BUSINESS TAX ACCT.#058833 EXP.1/1/12

PLANS PREPARED BY: adkan ENGINEERS
Civil Engineering · Surveying · Planning
6820 Airport Drive, Riverside, CA 92504
Tel:(951) 688-0241 Fax:(951) 688-0599
Under the Supervision of: Charissa J.Leach, R.C.E. 53390 Exp. 06.30.11 Date: 3-10-11

BENCHMARK: G3-F2
CITY OF RIVERSIDE BENCHMARK No. G3-F2 BRASS DISK IN A MONUMENT WELL AT THE INTERSECTION OF ARLINGTON AVENUE AND VAN BUREN BOULEVARD

ELEVATION: 736.332

MARK	REVISIONS	APPR.	DATE

DESIGNED BY: MITCH DRAWN BY: R.D.R. CHECKED BY: C–

CITY OF RIVERSIDE
PUBLIC WORKS DEPARTMENT

APPROVED BY	DATE	BY
PRINCIPAL ENGINEER	3-11-11	[illegible]
TRAFFIC DIVISION	3-11-11	[illegible]
CONSTRUCTION ADMIN.	3/14/11	[illegible]
SURVEYOR	CS	3/14/11
LANDSCAPE		
PARK & RECREATION		

APPROVED BY
CITY ENGINEER
DATE 3/15/11

STORM DRAIN PLAN
JURUPA AVENUE EXTENSION
PHASE II
HOLE CULVERT AND STORM DRAIN
WALL STRUCTURAL DETAILS

D-725
SHEET 10 OF 11

HORIZ. SCALE: AS NOTED VERT. SCALE: 1"=4'
J.N. 7669

PLOT DATE:3/10/2011 9:15 AM
U:\Projects\City of Riverside\7669\Engineering\Storm Drain\SD10.dwg

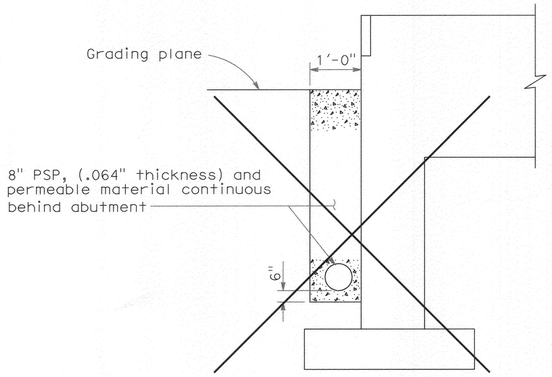

BRIDGE DETAIL 3-5

8" PSP AND PERMEABLE MATERIAL

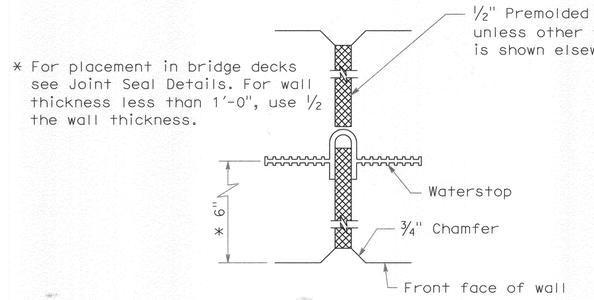

BRIDGE DETAIL 3-4

WALL EXPANSION JOINT

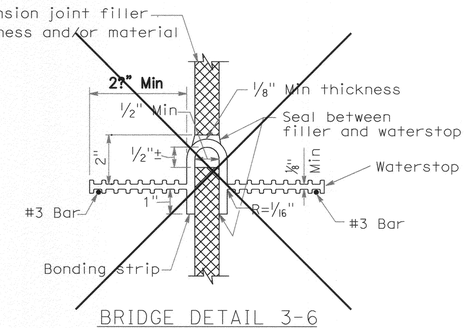

BRIDGE DETAIL 3-6

WATERSTOP

The State of California or its officers or agents shall not be responsible for the accuracy or completeness of electronic copies of this plan sheet.

To get to the Caltrans web site, go to: http://www.dot.ca.gov

NOTES:

Holes will be permitted in the outer ½" of the web for wire, rings, etc. Tie web to #3 reinforcing bars @ 12 maximum intervals to support the waterstop in proper position during concrete placement. Alternative detail may be submitted for approval of the Engineer.

Waterstop to have 5 or more pairs of of raised ribs to provide 0.1 square inches minimum rib cross-section area on each half of the waterstop.

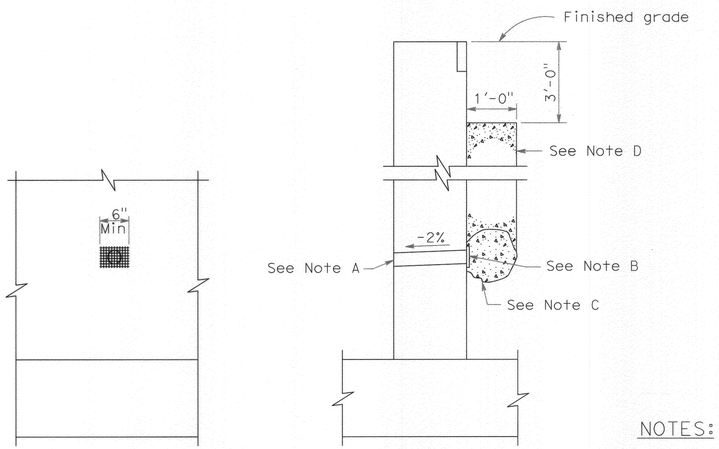

ELEVATION SECTION

BRIDGE DETAIL 3-1

WEEP HOLE AND PERVIOUS BACKFILL

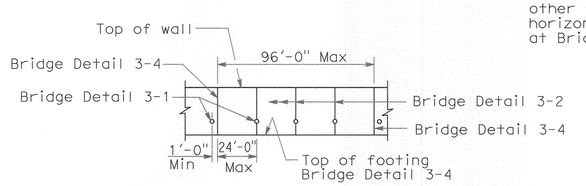

BRIDGE DETAIL 3-3

WALL EXPANSION JOINTS AND WEAKENED PLANES

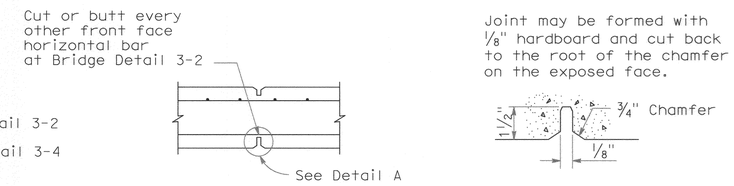

SECTION DETAIL A

BRIDGE DETAIL 3-2

WEAKENED PLANES

NOTES:

A. 4" Ø Drains @ 25'-0" maximum center to center, 9'-0" center to center for Type 3 and 9'-3" center to center for Type 4 retaining walls. For walls adjacent to sidewalks or curbs, provide 4" plastic pipe under the sidewalk to discharge thru curb face. Exposed wall drains shall be located 3"± above finished grade.

B. 6" square aluminum or galvanized steel wire ¼" mesh hardware cloth, minimum wire diameter 0.025". Anchor firmly to backface.

C. One cubic foot pervious backfill material in a nonwoven filter fabric, securely tied.

D. Pervious backfill material continuous behind retaining wall or abutment.

STATE OF CALIFORNIA
DEPARTMENT OF TRANSPORTATION

BRIDGE DETAILS

NO SCALE

B0-3

2006 STANDARD PLAN B0-3

30 0 30 60 90

Scale 1" = 30'

Know what's below. Call before you dig.

REGISTERED PROFESSIONAL ENGINEER CHARISSA J.A. LEACH NO. 53390 EXP. 6-30-11 CIVIL STATE OF CALIFORNIA

CITY OF RIVERSIDE BUSINESS TAX ACCT.#058833 EXP.1/1/12

PLANS PREPARED BY: adkan ENGINEERS
Civil Engineering · Surveying · Planning
6820 Airport Drive, Riverside, CA 92504
Tel:(951) 688-0241 Fax:(951) 688-0599
Under the Supervision of: Charissa Leach, R.C.E. 53390 Exp. 06.30.11 Date: 3-10-11

BENCHMARK: G3-F2
CITY OF RIVERSIDE BENCHMARK No. G3-F2 BRASS DISK IN A MONUMENT WELL AT THE INTERSECTION OF ARLINGTON AVENUE AND VAN BUREN BOULEVARD

ELEVATION: 736.332

MARK	REVISIONS	APPR.	DATE

DESIGNED BY: MITCH DRAWN BY: R.D.R. CHECKED BY: C-

CITY OF RIVERSIDE
PUBLIC WORKS DEPARTMENT

APPROVED BY	DATE	BY
PRINCIPAL ENGINEER	3-11-11	DH
TRAFFIC DIVISION	3-11-11	[illegible]
CONSTRUCTION ADMIN.	3/14/11	KS
SURVEYOR	CS	3/10/11
LANDSCAPE		
PARK & RECREATION		

APPROVED BY CITY ENGINEER

DATE 3/15/11

STORM DRAIN PLAN

JURUPA AVENUE EXTENSION PHASE II

HOLE CULVERT AND STORM DRAIN

WALL STRUCTURAL DETAILS

HORIZ. SCALE: AS NOTED VERT. SCALE: 1"=4'

D-725

SHEET 11 OF 11

J.N. 7669

DESIGN W.O. – 0911041

CONSTRUCTION W.O. – 1015572

U:\Projects\City of Riverside\7669\Engineering\Storm Drain\SD11.dwg

PLOT DATE:3/10/2011 9:14 AM