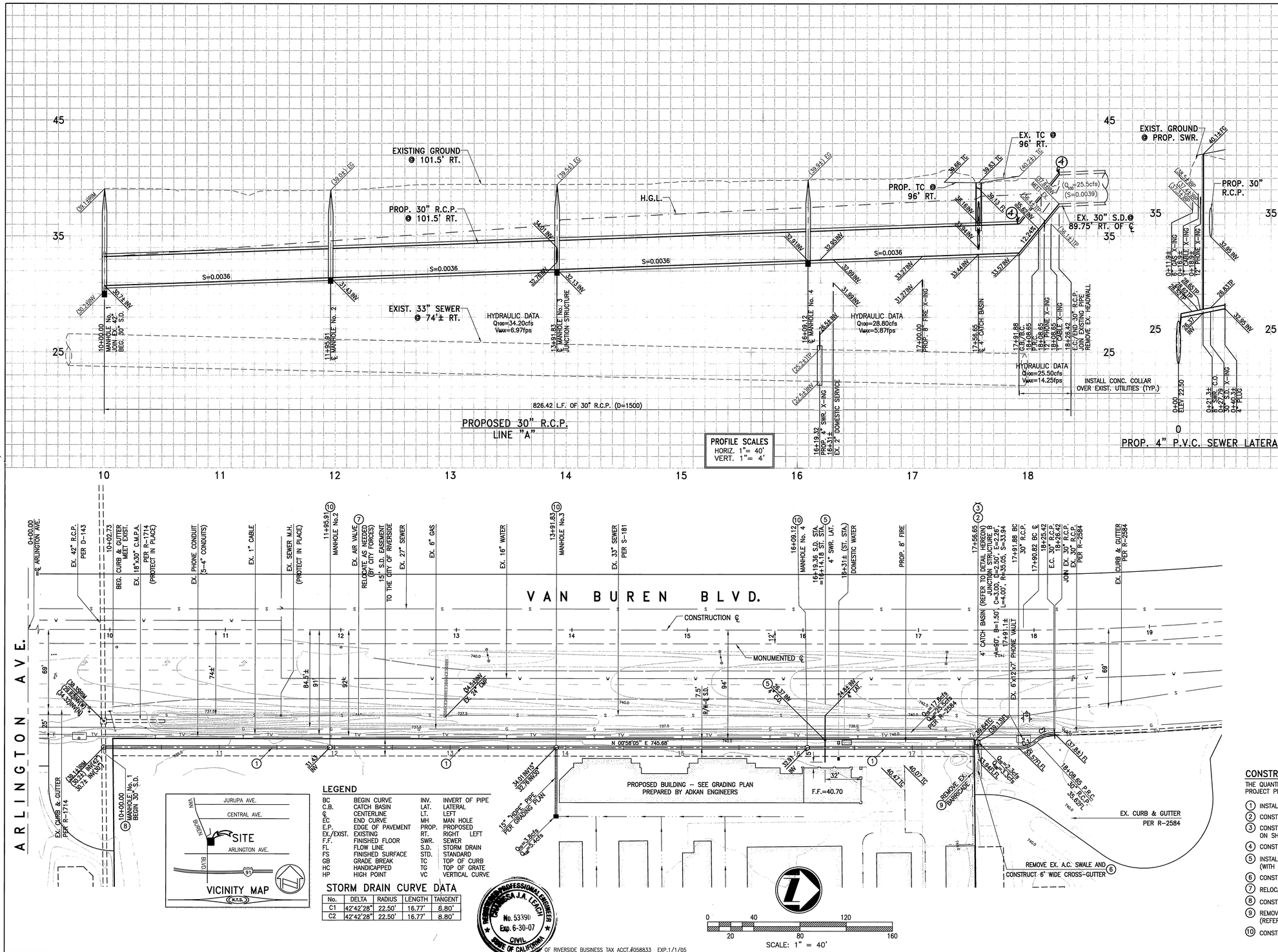

STORM DRAIN CONSTRUCTION GENERAL NOTES

1. NO PERSON SHALL PERFORM ANY CONSTRUCTION ACTIVITY OR INSTALL ANY OBJECTS WITHIN THE PUBLIC RIGHT-OF-WAY OR EASEMENTS OF THE CITY OF RIVERSIDE WITHOUT A VALID CONSTRUCTION PERMIT OR, A STREET OPENING PERMIT OR AN ENCROACHMENT PERMIT ISSUED BY THE CITY'S PUBLIC WORKS DEPARTMENT.

2. IT SHALL BE THE RESPONSIBILITY OF THE CONTRACTOR TO CLEAR THE RIGHT OF WAY IN ACCORDANCE WITH THE PROVISIONS OF LAW AS IT AFFECTS EACH UTILITY INCLUDING IRRIGATION LINES AND APPURTENANCES AND AT NO COST TO THE CITY.

3. CONSTRUCTION SHALL BE IN ACCORDANCE WITH THE CITY OF RIVERSIDE DEPARTMENT OF PUBLIC WORKS, STANDARD DRAWINGS, ITS SUPPLEMENTAL NOTES AND THE STANDARD SPECIFICATIONS FOR PUBLIC WORKS CONSTRUCTION, CURRENT EDITION.

4. THE PRIVATE ENGINEER SIGNING THESE PLANS IS RESPONSIBLE FOR ASSURING THE ACCURACY AND ACCEPTABILITY OF THE WORK HEREON. IN THE EVENT OF DISCREPANCIES ARISING DURING CONSTRUCTION, THE PRIVATE ENGINEER SHALL BE RESPONSIBLE FOR DETERMINING AN ACCEPTABLE SOLUTION AND REVISING THE PLANS FOR APPROVAL BY THE CITY.

5. QUANTITIES SHOWN ARE FOR INFORMATION ONLY AND THE CITY OF RIVERSIDE IS NOT RESPONSIBLE FOR THEIR ACCURACY.

6. THE DEVELOPER SHALL BE RESPONSIBLE FOR PRESERVING OR RE-ESTABLISHING AND REFERENCING SURVEY MONUMENTS DESTORYED, DISTURBED OR BURIED AS A RESULT OF CONSTRUCTION SHOWN HEREON.

7. THE CONTRACTOR SHALL COORDINATE TRENCHING FOR CABLE TELEVISION WITH OTHER TRENCHING WITHIN THE PROJECT.

8. ALL FLAGGED ELEVATIONS SHALL BE STAKED IN THE FIELD BY THE PRIVATE ENGINEER.

9. ON ALL AREAS WITHIN PUBLIC RIGHT OF WAY WHERE THE FILL IS ONE (1) FOOT OR GREATER, A LETTER WILL BE REQUIRED FROM THE SOILS ENGINEER, CERTIFYING THE COMPACTION OF THE FILL BELOW SUBGRADE, PRIOR TO ISSUANCE OF THE CONSTRUCTION PERMIT/CUT SHEETS.

10. THE CONTRACTOR SHALL CALL IN A LOCATION REQUEST TO UNDERGROUND SERVICE ALERT (USA), PHONE # 1-800-227-2600, TWO WORKING DAYS BEFORE DIGGING. NO CONSTRUCTION PERMIT WILL BE ISSUED BY THE PUBLIC WORKS DEPARTMENT INVOLVING EXCAVATION FOR UNDERGROUND FACILITIES UNLESS THE APPLICANT HAS BEEN PROVIDED AN INQUIRY IDENTIFICATION NUMBER BY U.S.A.

11. THE DEVELOPER AND/OR CONTRACTOR SHALL CONTACT THE STREET DIVISION (351-6127) TO PICK UP ANY EXISTING STD. 180 BARRICADES THAT ARE BEING REMOVED. THE CITY'S INSPECTOR WILL MAKE THE FINAL DETERMINATION ON WHETHER A BARRICADE CAN BE RELOCATED.

WATER DEPARTMENT NOTE

DEVELOPER TO GIVE CITY WATER DIVISION FIVE (5) WORKING DAYS WRITTEN NOTICE PRIOR TO START OF CONSTRUCTION AND ALLOW CITY TEN (10) WORKING DAYS FOR COMPLETION OF WORK. (909) 351-6368

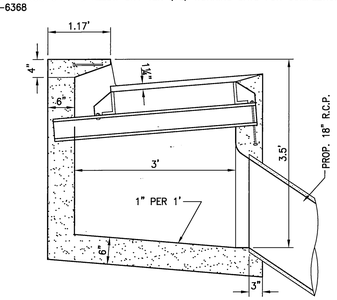

CATCH BASIN DETAIL

CITY STANDARD No. 406 (MODIFIED FOR FRONT EXIT)

N.T.S.

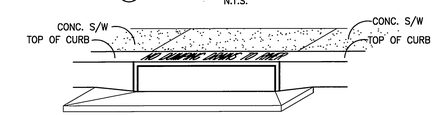

1. STENCILS TO HAVE 2" LETTERS AS FOLLOWS: "NO DUMPING DRAINS TO RIVER"
2. PLACE BOTH STENCILS CENTERED WITHIN THE CATCH BASIN OPENING & WITHIN THE TOP OF CURB
3. SPRAY BOTH STENCILS WITH WHITE PAINT
4. REMOVE STENCILS WHEN PAINT IS DRY

CATCH BASIN STENCILING DETAIL

N.T.S.

CONSTRUCTION NOTES AND QUANTITY ESTIMATE

THE QUANTITIES SHOWN BELOW ARE FOR BONDING INFORMATION ONLY. THE CONTRACTOR IS TO CONSTRUCT PROJECT PER THESE PLANS AND SUBMIT CONSTRUCTION BID BASED ON THEIR OWN QUANTITY "TAKE-OFF".

1	INSTALL 30" R.C.P. (1500-D) WITH CASE I BEDDING PER CITY STD. 452	827	L.F.
2	CONSTRUCT JUNCTION STRUCTURE "B" PER CITY STD. 421	1	EA.
3	CONSTRUCT 4' CATCH BASIN PER CITY STD, DWG No. 406 (MODIFIED PER DETAIL ON SHEET 1) INSTALL "FOSSIL FILTER" INSERT (KRISTAR OR EQUAL)	1	EA.
4	CONSTRUCT CONCRETE COLLAR PER CITY STD. DWG. No. 424	2	EA.
5	INSTALL SEWER LATERAL PER CITY STD. DWG. No. 562A (S=0.250) (WITH CLEANOUT LOCATED AT PROPERTY LINE)	40	L.F.
6	CONSTRUCT 6' WIDE CROSS GUTTER PER CITY STD. 220	35	L.F.
7	RELOCATE EXISTING AIR RELEASE VALVE (BY CITY FORCES)	1	EA.
8	CONSTRUCT MANHOLE 'AX' PER CITY STD. DWG. No. 430	1	EA.
9	REMOVE & SALVAGE EXISTING STREET BARRICADE (REFER TO GENERAL NOTE # 11)	28	L.F.
10	CONSTRUCT MANHOLE 'EZ' PER CITY STD. DWG. No. 431	3	EA.

LEGEND

BC	BEGIN CURVE	INV.	INVERT OF PIPE
C.B.	CATCH BASIN	LAT.	LATERAL
℄	CENTERLINE	LT.	LEFT
EC	END CURVE	MH	MAN HOLE
E.P.	EDGE OF PAVEMENT	PROP.	PROPOSED
EX./EXIST.	EXISTING	RT.	RIGHT LEFT
F.F.	FINISHED FLOOR	SWR.	SEWER
FL	FLOW LINE	S.D.	STORM DRAIN
FS	FINISHED SURFACE	STD.	STANDARD
GB	GRADE BREAK	TC	TOP OF CURB
HC	HANDICAPPED	TG	TOP OF GRATE
HP	HIGH POINT	VC	VERTICAL CURVE

STORM DRAIN CURVE DATA

No.	DELTA	RADIUS	LENGTH	TANGENT
C1	42°42'28"	22.50'	16.77'	8.80'
C2	42°42'28"	22.50'	16.77'	8.80'

REGISTERED PROFESSIONAL ENGINEER CHARLESA J.A. LEACH No. 53390 Exp. 6-30-07 CIVIL STATE OF CALIFORNIA

CITY OF RIVERSIDE BUSINESS TAX ACCT.#058833 EXP.1/1/05

CITY OF RIVERSIDE WATER DEPT.	CITY OF RIVERSIDE PUBLIC UTILITIES DEPARTMENT–ELECTRICAL OVERHEAD & UNDERGROUND	Underground Service Alert	PLANS PREPARED BY: adkan ENGINEERS Civil Engineering · Surveying · Planning 6820 Airport Drive, Riverside, CA 92504 Tel:(951) 688-0241 Fax:(951) 688-0599	BENCHMARK: CITY OF RIVERSIDE BENCHMARK No. G3-F2 BRASS DISK IN A MONUMENT WELL AT THE INTERSECTION OF ARLINGTON AVENUE AND VAN BUREN BOULEVARD	CITY OF RIVERSIDE PUBLIC WORKS DEPARTMENT	STORM DRAIN IMPROVEMENT PLAN	ACCOUNT NO.
APPROVED BY: 11/15/04 DATE	APPROVED BY: 11/15/04 DATE	Call: TOLL FREE 1-800 227-2600 TWO WORKING DAYS BEFORE YOU DIG	Under the Supervision of: 10-27-04 Charles Leach, R.C.E. 53390 Exp. 06.30.07 Date:	ELEVATION: 736.332	APPROVED BY / DATE / BY: PRINCIPAL ENGINEER 12/1/04; PARK DEPARTMENT; TRAFFIC DIVISION; STREET SERVICES 11/30/04	6589 VAN BUREN BLVD. EAST SIDE OF STREET FROM 1000± TO 1750± NORTHERLY OF ARLINGTON AVENUE DR-070-012 – A.P.N. 189-290-008	D-764
SO. CA. GAS CO. APPROVED BY DATE	PACIFIC BELL APPROVED BY 11/01/04 DATE	CHARTER COMMUNICATIONS APPROVED BY 10/28/04 DATE		MARK / REVISIONS / APPR. / DATE	APPROVED BY: CITY ENGINEER DATE 12/1/04	HORIZ. SCALE: 1"=40' VERT. SCALE: 1"=4'	SHEET 1 OF 1 J.N. 6639

DESIGNED BY: CMW DRAWN BY: CMW CHECKED BY: C–

SEXTON\6639\6639S001.DWG PLOT DATE: 10/19/04

INDEXED 12-6-04 LH