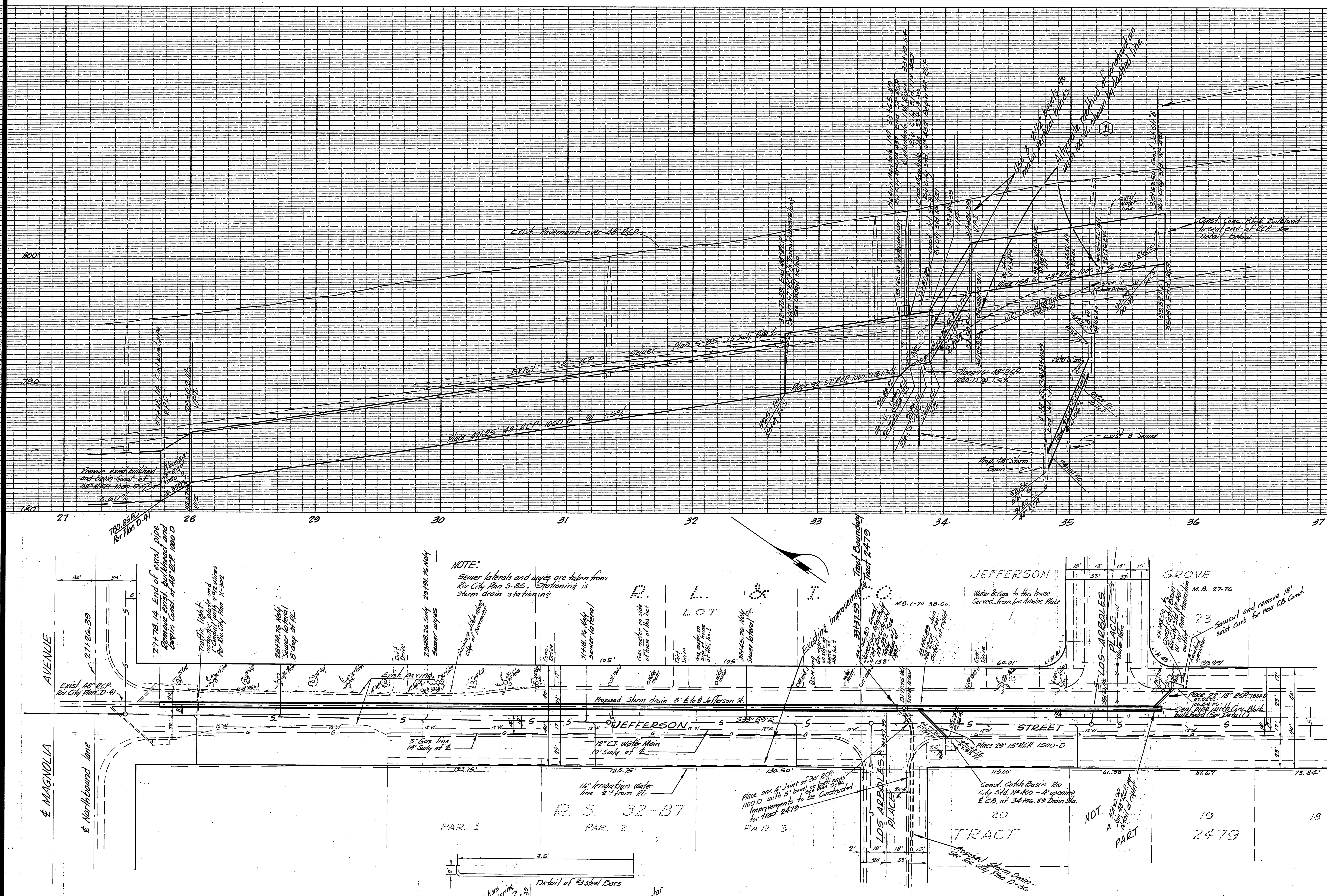

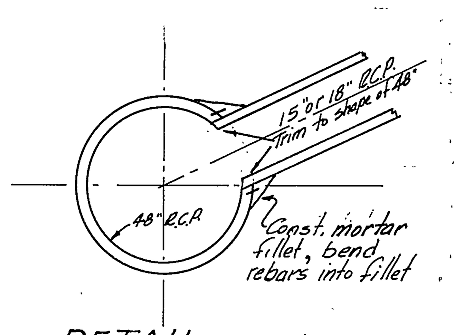

DETAIL
Fillet at entrance of 15" RCP at Sta 33+81.89 and 18" RCP at Sta. 35+69.50
No Scale

Table of values for Man Hole J.M. Std. 432	
Station 33+66.39	A = 45°
	B = 30"
	C = 6.22'
	D_1 = 48"
	D_2 = 57"
	E = 7'
	L = 8'
	R(elev.) = 91.01
	S(elev.) = 90.99

BENCH MARK:
Nail in lead in Nly curb of Magnolia Avenue 70' ± Wly ℄ Jefferson.
Elevation 793.14

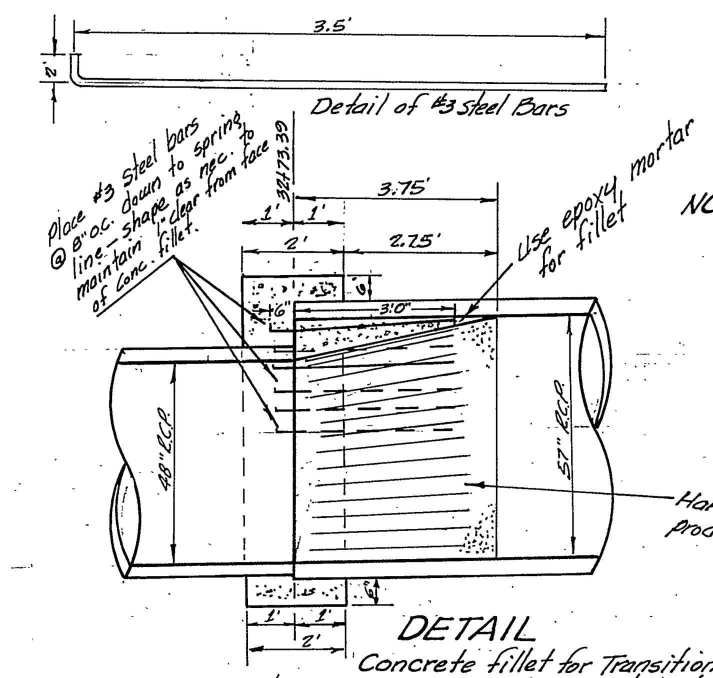

DETAIL
Concrete fillet for Transition from 57" RCP to 48" RCP and poured concrete collar around joint
No Scale

NOTE:
Sewer house Connections to be remodeled Per Riv. City Std. No 454 where ever necessary and per details below:
Sta. 27+78.14 to Sta 33+89.39 use case "A" or "B" as shown on Std. 454, case determination to be made in the field
Sta. 33+89.39 to 35+80 use cases "C" to "H" as directed in the field. "M" to be 6' (From "as built" Sewer plan S-85 it appears that no remodeling will be required since no laterals are shown)
Backfill under laterals & water mains to be mechanically tamped to 95% relative compaction to the springline of the lateral or main

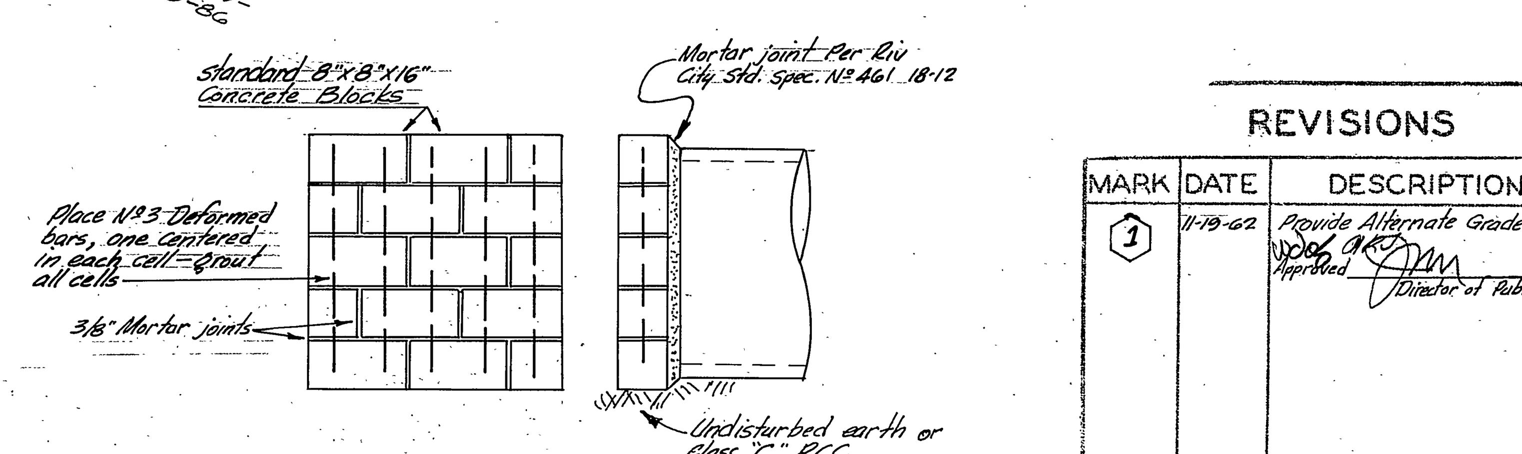

DETAIL---
CONCRETE BLOCK BULKHEAD
NO SCALE

GENERAL NOTES

452

II 1

sibi

REVISIONS

MARK	DATE	DESCRIPTION
1	11-19-62	Provide Alternate Grade for pipe. Approved [signature] Director of Public Works

DESIGNED BY
DRAWN BY
CHECKED BY WDG
RECOMMENDED BY
ASSISTANT CITY ENGINEER

J. F. DAVIDSON-CIVIL ENGINEER
R.E. NO. 862
RIVERSIDE, CALIFORNIA
APPROVED BY George E. McCarty RE 10688 DATE 10/22/62

CITY OF RIVERSIDE, CALIFORNIA
DEPARTMENT OF PUBLIC WORKS

STORM DRAIN PLAN & PROFILE
JEFFERSON STREET
Magnolia Avenue to Los Arboles Place
Station 27+78.14 to 35+80
HORIZ. SCALE 1" = 40' VERT. SCALE 1" = 4'

APPROVED BY [signature]
Director of Public Works
DATE 11-5-62

NO. D-85
SHEET 1 OF 1