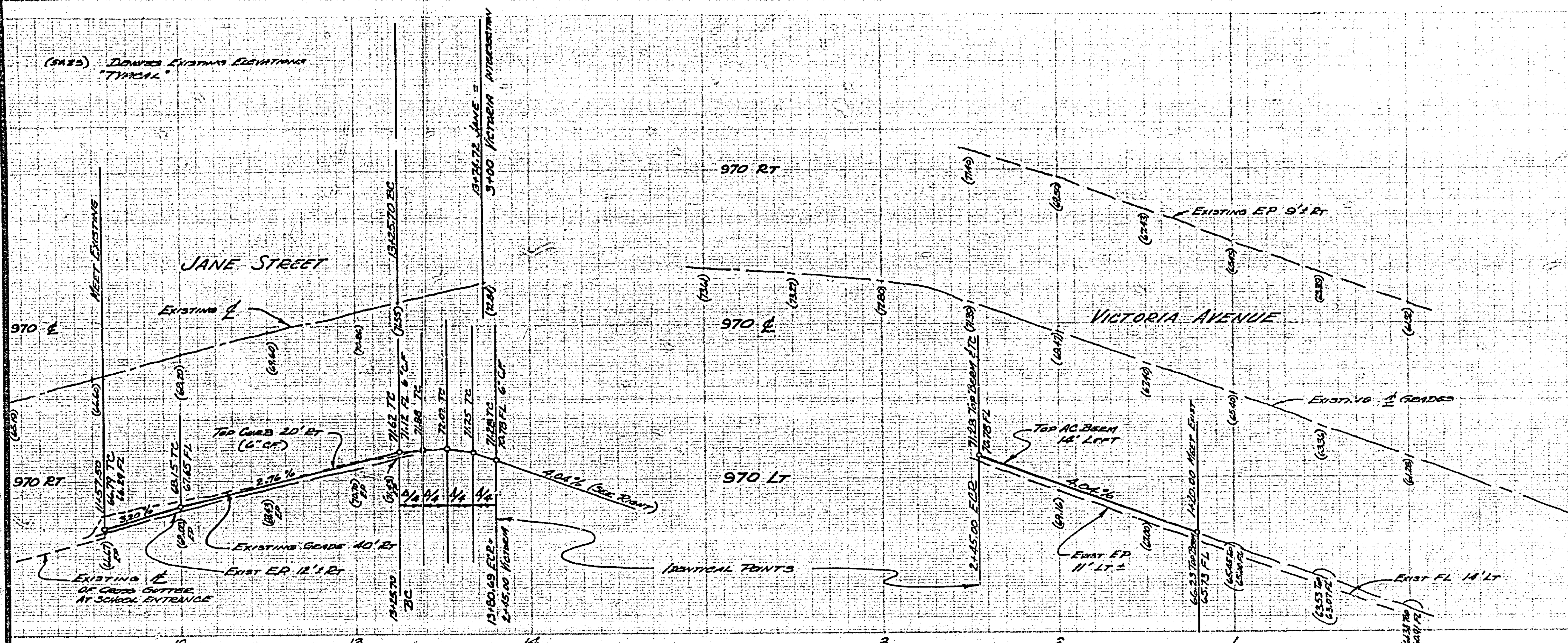

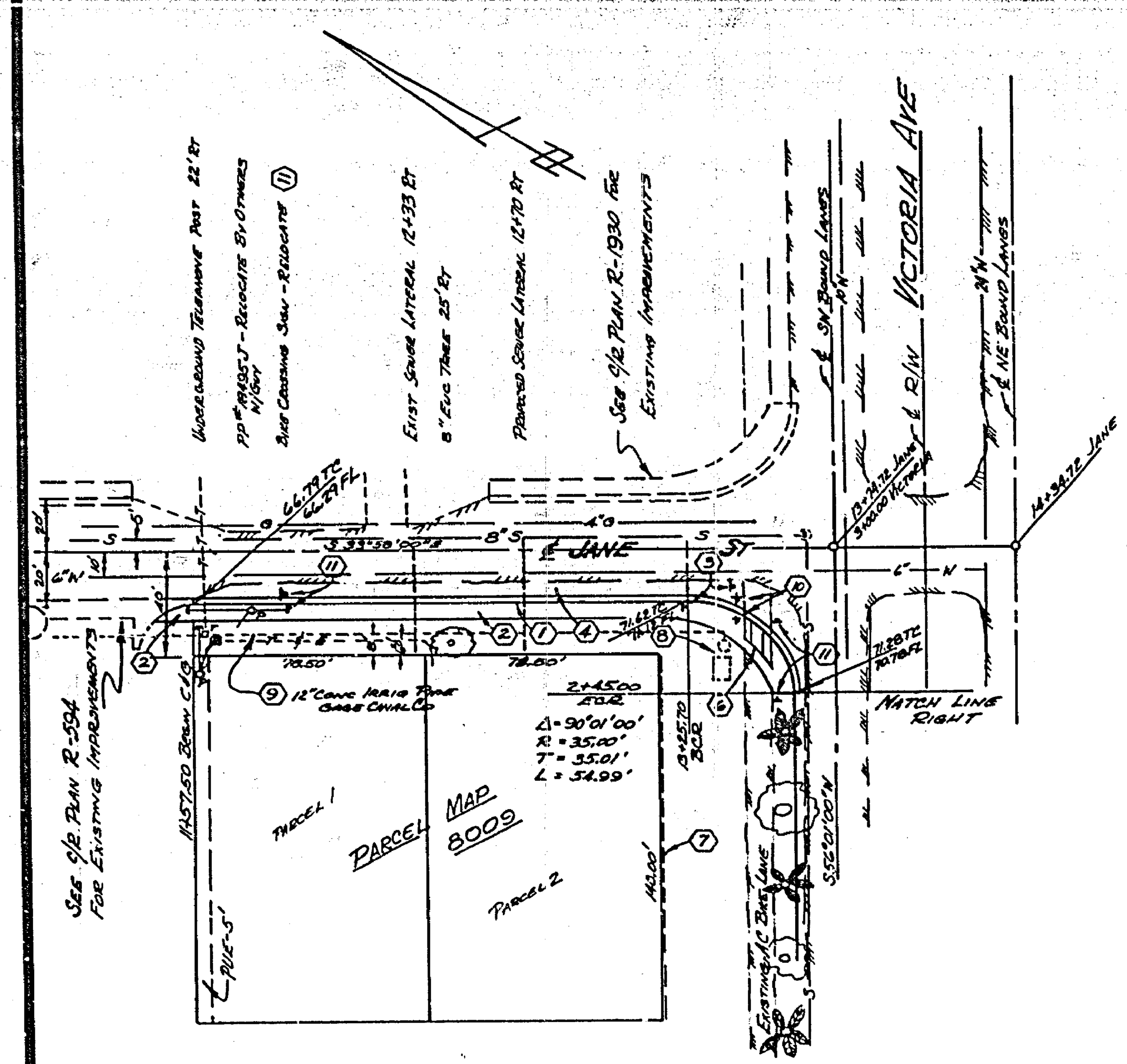

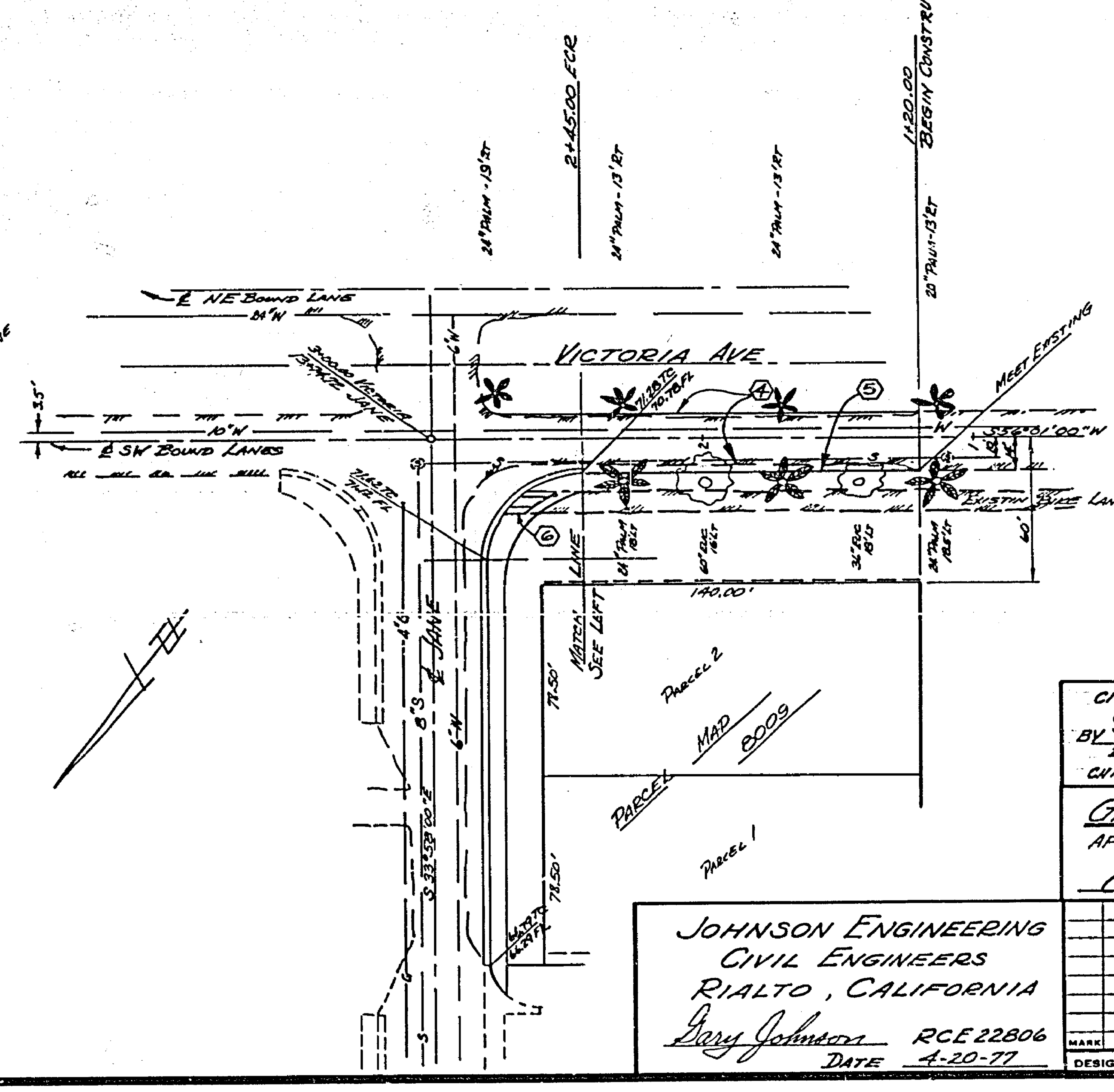

General Notes:

1. Construction Shall Be In Accordance With The Standard Specifications For Public Works Construction, 1976 Edition And Per City Of Riverside Standard Drawings.
2. 4" x 4" Blockouts For Mailboxes Required In Curb Sidewalk.
3. Location Of Driveway Approaches (Std No 802) To Be Determined At The Time Of Construction As Approved By The Traffic Engineer.
4. It Shall Be The Responsibility Of The Contractor To Clear The Right Of Way In Accordance With The Provisions Of Law As It Affects Each Utility Including Irrigation Lines And Appurtenances And At No Cost To The City.
5. See Landscape And Sprinkler System Plans For Parkway On Victoria Ave.
6. Curb & Gutter & AC Berm To Be Staked At 3' Offset And 25' Intervals.
7. All Overhanging Tree Limbs That Are Less Than 15' Above The Street Grade Shall Be Trimmed Back.
8. Trim Edge Of Existing Pavement Where New Pavement Joins To A Smooth, Straight Line. Construct Match Up Paving As Shown On This Plan And Overlay Paving As Directed In The Field To Produce A Smooth Section. Engineer Estimates Overlay To Be 5± Tons
9. The Private Engineer Signing These Plans Is Responsible For Assuring The Accuracy And Acceptability Of The Work Hereon. In The Event Of Discrepancies Arising During Construction As A Result Of Errors Or Omissions, The Private Engineer Shall Be Responsible For Determining An Acceptable Solution And Revising The Plans For Approval By The City.
10. All Flagged Elevations Shall Be Staked In The Field By The Engineer

Construction Notes:

① Construct PCC Curb & Gutter Per Riverside City Std. No. 200 (6" C.F.)
② Construct 6' PCC Curb Sidewalk Per Riverside City Std. No. 325
③ Relocate Stop Sign — Provide Temporary Signs During Construction As Required By City Traffic Engineer
④ Construct Paving Section Per Typical Section
⑤ Construct Std. 250 AC Berm - Type 1
⑥ Construct Wheelchair Ramp Per Riverside City Std. No. 304
⑦ Construct Conc. Block Wall Per Riverside City Std. No. 704 See Landscape Plan For Details
⑧ Remove And Dispose Of Irrigation Weir Box And Standpipe
⑨ 12" Conc. Irrig Pipe - Plug At Prop. Line & Remove Pipe Or Crush In Place
⑩ Relocate Street Name Sign
⑪ Relocate Traffic Control Signs (2 EA)

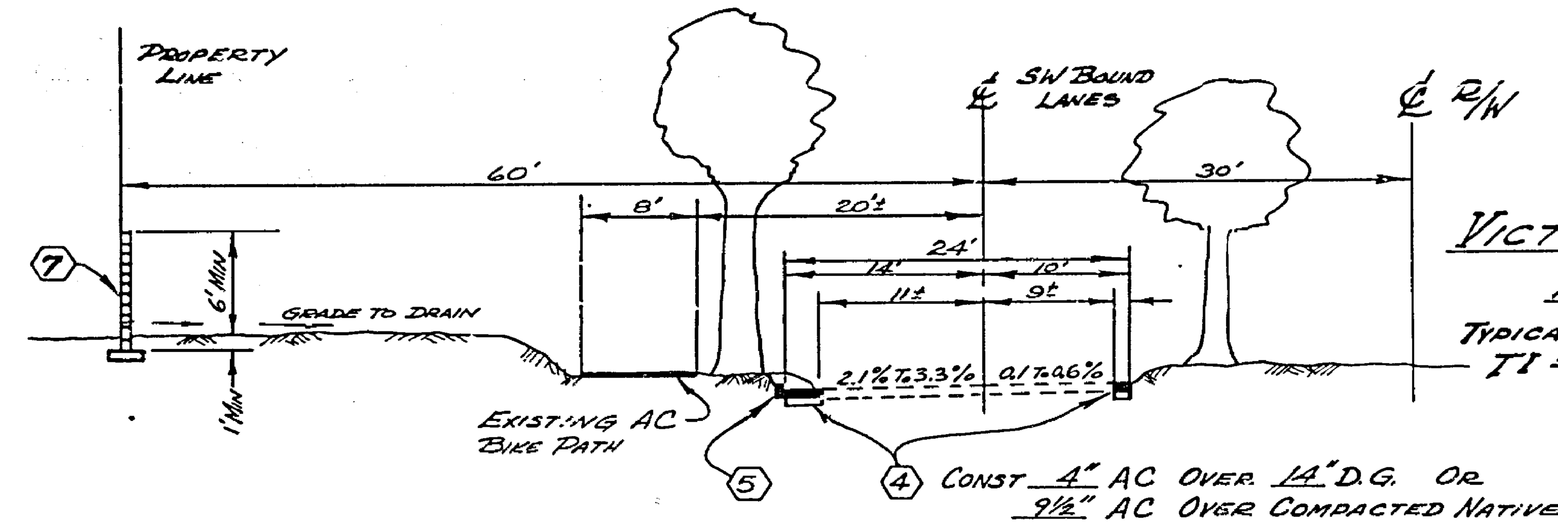

Victoria Avenue
Typical Section
TI = 7 No Scale

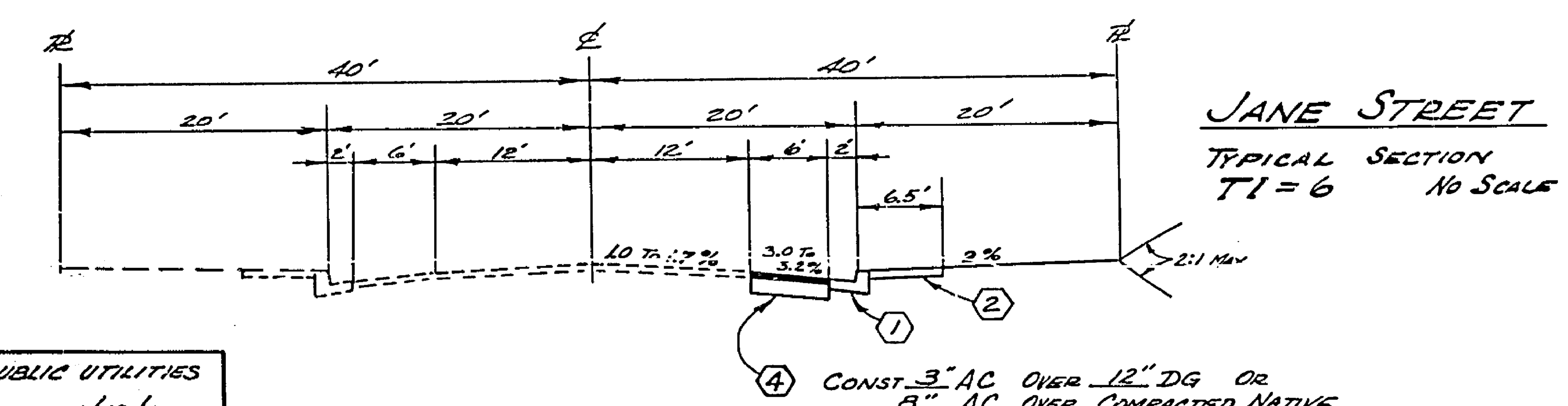

Jane Street
Typical Section
TI = 6 No Scale

Basis Of Bearings: RS 37/2
Victoria S 56°01' W ; Jane S 33°58' E

Bench Mark: (GC-B) Brass Disk At Intersection Of Victoria Ave And Mary Street, FB 735/5 Elev 944.502

City Of Riverside - Public Utilities
By Don Campbell 6/22/77
Don D Campbell Date
Chief Utilities Engineer - Electric

Gage Canal Company
Approved:
C E Hare Date 6/14/77

Johnson Engineering
Civil Engineers
Rialto, California
Gary Johnson RCE 22806
Date 4-20-77

Mark	Revisions	Appr.	Date

Designed by G J Drawn by [illegible] Checked by [illegible]

CITY OF RIVERSIDE, CALIFORNIA
DEPARTMENT OF PUBLIC WORKS

Approved by	By	Date
Principal Engineer	[illegible]	7/15
Park Department	WS	7/18
Traffic Division	[illegible]	[illegible]
Chief P. W. Engr.	[illegible]	7-15
Planning	JC	7/8

Approved by [signature] Director of Public Works
Date 7-15-77

Street Plan & Profile
Parcel Map 8009
Jane Street
Victoria Avenue
Horiz. Scale: 1" = 40' Vert. Scale: 1" = 4'

Indexed E T
Project No. R-1994
Sheet 1 of 1
File No.