RIVERSIDE CALIFORNIA

CITY OF RIVERSIDE — INCORPORATED 1883

PUBLIC WORKS DEPARTMENT

MAIN STREET AT S.P. AND U.P. BRIDGES HES-R045(5) T.I. = 8.0

CONSTRUCTION LEGEND

CENTER LINE	——℄—— – ——	TOP OF SLOPE	
RIGHT-OF-WAY LINE	——R/W——	TOE OF SLOPE	
SUBDIVISION LOT LINE	——R——	DIRECTION OF FLOW	

(A) REMOVE EXISTING A.C. OVER P.C.C. PAVEMENT AND REPLACE WITH STRUCTURAL SECTION OF 0.90' A.C. OVER NATIVE SOIL OR 0.30' A.C. OVER 1.45' AGGREGATE BASE MATERIAL.

(B) CONSTRUCT STRUCTURAL SECTION OF 0.90' A.C. OVER NATIVE SOIL OR 0.30' A.C. OVER 1.45' AGGREGATE BASE MATERIAL.

(C) OVERLAY EXISTING A.C. PAVEMENT WITH A VARIABLE THICKNESS OF ASPHALT CONCRETE. MINIMUM OVERLAY TO BE 0.05' THICK.

SPECIFIC CONSTRUCTION NOTES

NUMBERS ABOVE 100 IN A HEXAGON ON THE PLAN REFER TO THE RESPECTIVE STANDARD DRAWING AND SHALL BE CONSTRUCTED ACCORDINGLY, UNLESS MODIFICATIONS ARE NOTED ON THE PLAN OR COVER SHEET BELOW. ANY NUMBER SHOWN BELOW THE STANDARD DRAWING NUMBER INDICATES THE SPECIFIC ALTERNATE TO BE CONSTRUCTED.

(406) CATCH BASIN AT STA. 8+21.87 - CONSTRUCT AS SHOWN IN STD. 406, EXCEPT THE DIMENSION FROM THE INTERIOR SURFACE OF THE SIDE WALL TO THE ℄ OF THE PIPE WILL BE 2'.

CATCH BASIN AT STA. 8+24.95 - CONSTRUCT AS SHOWN IN STD. 406, EXCEPT AS INDICATED IN THE DETAIL ON SHT. 3.

(200) IF THE A.C./BASE ALTERNATE IS CHOSEN, BASE MATERIAL SHALL BE PLACED UNDER THE CURB AND GUTTER TO THE SAME DEPTH AS THE STRUCTURAL SECTION.

GENERAL CONSTRUCTION NOTES

1. RIGHTS OF ENTRY HAVE BEEN OBTAINED FOR WORK SHOWN ON PRIVATE PROPERTY.
2. ALL ELEVATIONS SHOWN ON THE PLAN SHALL BE STAKED IN THE FIELD.
3. EXISTING UTILITIES SHOWN ON THIS PLAN ARE PLOTTED FROM UTILITY RECORDS. THE CONTRACTOR IS REQUIRED TO TAKE DUE PRECAUTIONARY MEASURES TO LOCATE AND PROTECT ALL UTILITIES, WHETHER OR NOT SHOWN ON THIS PLAN. IF THE COVER OF A UTILITY IS KNOWN, IT IS SHOWN IN THE PROFILE.
4. UTILITIES SHOWN IN CONFLICT WITH PROPOSED STORM DRAIN FACILITIES (PROFILE SHT. 3) WILL BE RELOCATED BENEATH THE PROPOSED 39" STORM DRAIN PRIOR TO CONSTRUCTION.

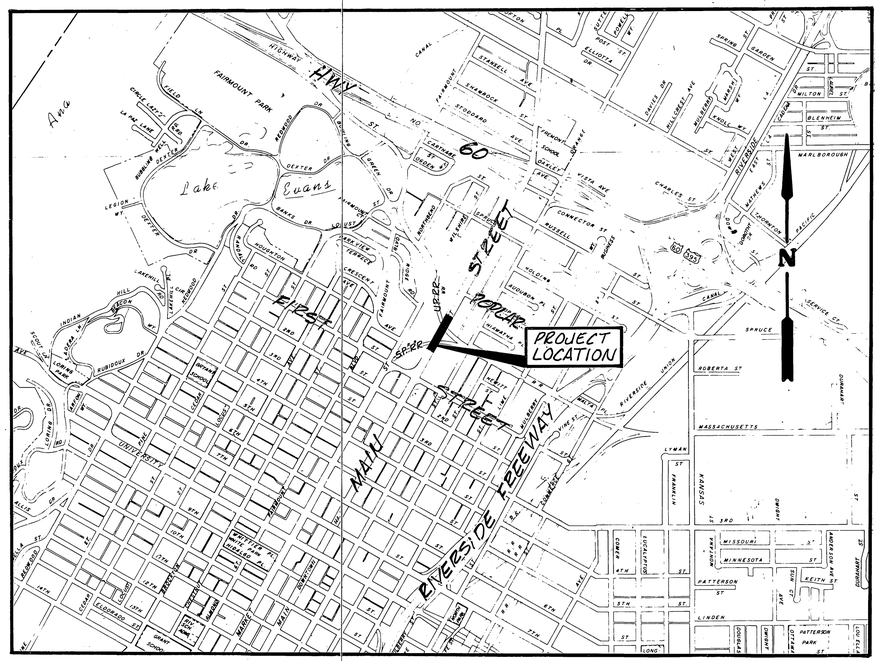

PROJECT LOCATION PLAN

0 KM. 0.5 KM. 1 KM. 1.5 KM.

0' 500' 1000' 2000' 3000' 4000' 5000' 6000'

SCALE 1" = 1000'

EXISTING UNDERGROUND & TOPOGRAPHY LEGEND

EXISTING UNDERGROUND UTILITIES:

SANITARY SEWER	——8"S——	TELEPHONE CONDUIT	——T——T——
WATER LINE	——6"W——	ELECTRICAL CONDUIT	——E——E——
STORM DRAIN	——24"S.D.——	STREET LIGHTING	——SL——SL——
GAS LINE	——3"G——	TRAFFIC SIGNAL	——SIG——SIG——
IRRIGATION LINE	——20" IRR.——	FIRE ALARM	——F——F——
ABANDONED UTILITY	———6"G(ABAN'D.)———		

EXISTING TOPOGRAPHY:

BLOCK WALL	TOP OF SLOPE
BOARD FENCE	TOE OF SLOPE
WIRE FENCE	DIRECTION OF FLOW
CHAIN LINK FENCE	

SANITARY SEWER M.H.	POLE & GUY ANCHOR	PEDESTRIAN PUSH BUTTON
SANITARY SEWER CLEANOUT	ELECTRIC POLE	RAILROAD TRACKS
STORM DRAIN M.H.	TELEPHONE POLE	RAILROAD SIGN
IRRIGATION WEIR	JOINT USE POLE	RAILROAD SIGNAL
WATER M.H.	PULL BOX	STREET LIGHT & TRAFFIC SIGNAL ON MAST ARM
GAS M.H.	TRAFFIC SIGN	STREET LIGHT (UPRIGHT)
ELECTRIC M.H.	PARKING METER	STREET LIGHT
TELEPHONE M.H. OR VAULT	FIRE ALARM BOX	TRAFFIC SIGNAL
WATER METER	STREET NAME SIGN	TRAFFIC SIGNAL ON MAST ARM
FIRE HYDRANT	GAS METER	TRAFFIC SIGNAL CONTROLLER
SPRINKLER HEAD	MAIL BOX	TRAFFIC SIGNAL PRESSURE DETECTOR
VALVE	FAUCET	TRAFFIC SIGNAL LOOP DETECTOR
AIR VALVE	TELEPHONE RISER	
AIR VENT	WHEEL STOP	
	A.C. BERM	
	STEEL POST	
	WOOD POST	

CONCRETE		CITRUS TREE
ASPHALT	OR	DECIDUOUS TREE
EDGE OF PAVEMENT	OR	PALM TREE
BUILDINGS	OR	SHRUBBERY
UNDERGROUND STRUCTURE		TREE STUMP
OVERHANGING STRUCTURE		EVERGREEN TREE

"AS BUILT" 2-24-84 BLD

INDEX UF

CITY OF RIVERSIDE
PUBLIC WORKS DEPARTMENT

	BY	DATE
APPROVED BY		
PRINCIPAL ENGINEER		
PARK DEPARTMENT		
TRAFFIC DIVISION	[illegible]	6-13-83
CHIEF P.W. ENGINEER	[illegible]	6-13-83
[illegible]	[illegible]	4-24-83

APPROVED BY: [signature]
PUBLIC WORKS DIRECTOR
DATE 6/13/83

MAIN STREET AT S.P. AND U.P. BRIDGES

DESIGNED BY SE DRAWN BY CB CHECKED BY GHH

ACCOUNT No. 30-575-287-05,07
DRAWING NUMBER
R-2262
SHEET 1 OF 4

4-7 11-3

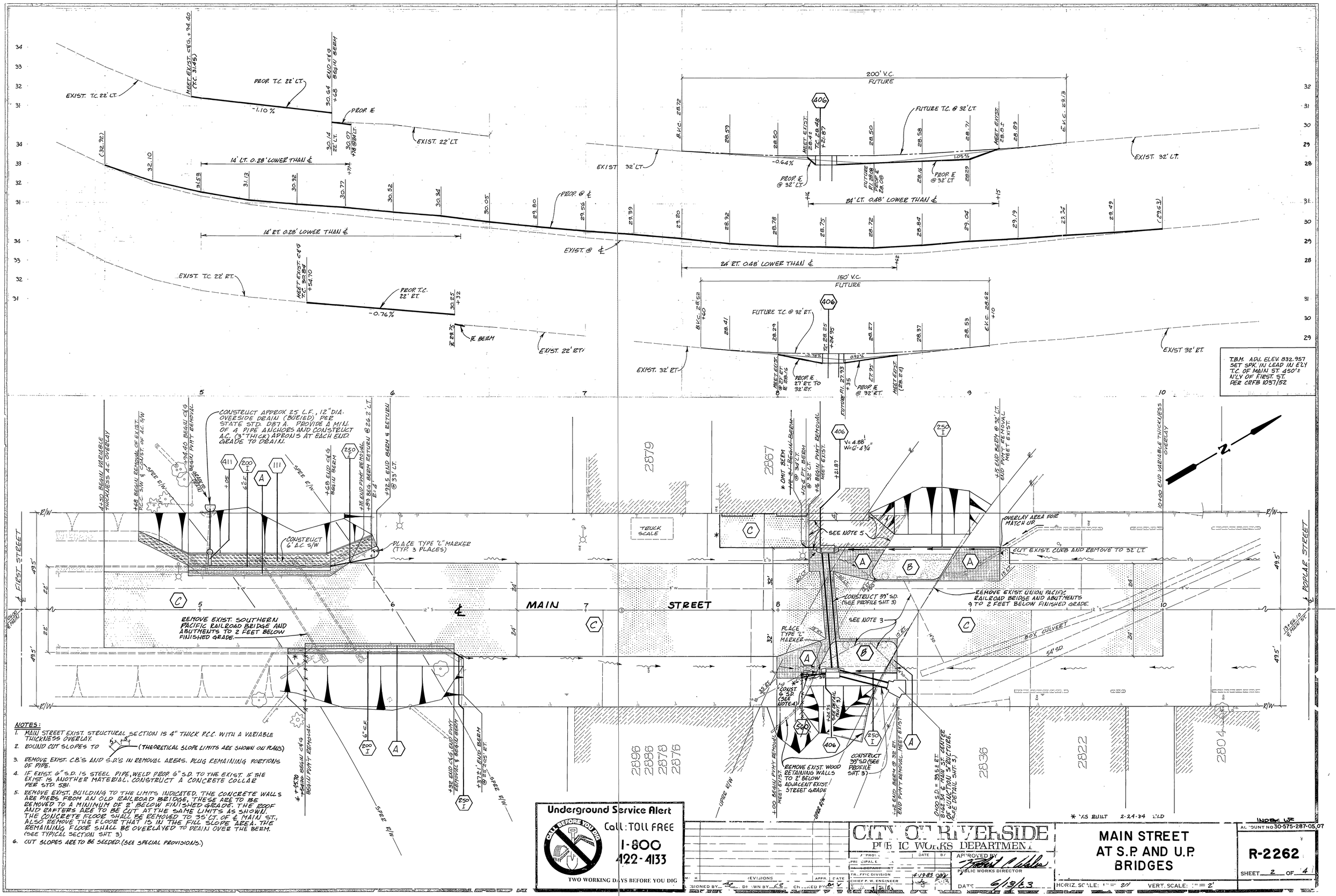
EXIST. T.C. 22' LT.
MEET EXIST. C&G ± 34.40 (T.C. 31.45)
PROP. T.C. 22' LT.
-1.10%
30.64 +68
END C&G & BEGIN BERM
PROP. E
EXIST. 22' LT.
30.14 22' LT.
30.07 +78 @ 22' LT.
(32.32)
32.10
14' LT. 0.28' LOWER THAN ℄
31.53
31.12
30.32
30.77
30.52
30.34
30.05
29.80
PROP. @ ℄
29.56
EXIST. @ ℄
14' RT. 0.28' LOWER THAN ℄
EXIST. T.C. 22' RT.
MEET EXIST. C&G @ 32.82 +54.70
PROP. T.C. 22' RT.
-0.76%
30.25 +32
E 29.25
E. BERM
EXIST. 22' RT.
200' V.C. FUTURE
406
B.V.C. 28.72
28.59
28.50
MEET EXIST. 28.41 +43.48
+21.87
FUTURE T.C. @ 32' LT.
28.50
28.58
28.71
MEET EXIST. 28.84 28.89
E.V.C. 29.13
-0.64%
1.05%
EXIST 32' LT.
PROP. E @ 32' LT.
FUTURE P.I. 28.58 +8 28.08
28.16
PROP. E @ 32' LT.
28.23
EXIST. 32' LT.
+16
24' LT. 0.48' LOWER THAN ℄
+15
29.39
29.20
28.92
28.78
28.75
28.72
28.84
29.04
29.19
29.34
29.49
(29.63)
24' RT. 0.48' LOWER THAN ℄
+42
150' V.C. FUTURE
406
B.V.C. 28.52 +60
28.41
28.29
FUTURE T.C. @ 32' RT.
FUTURE P.I. 28.25 +84.95
28.27
28.37
28.53
E.V.C. 28.62 +10
-0.78%
0.92%
EXIST. 32' ET.
MEET EXIST. @ 28.27 +84.16
PROP. E 27' RT. TO 32' RT.
FUTURE P.I. 27.93 +35
27.95
PROP. E @ 32' RT.
MEET EXIST. (28.24)
EXIST 32' ET.
T.B.M. ADJ. ELEV. 832.957
SET SPK. IN LEAD IN E'LY
T.C. OF MAIN ST. 450'±
N'LY OF FIRST ST.
PER CRFB 1057/52
5
6
7
9
10
CONSTRUCT APPROX 25 L.F., 12" DIA. OVERSIDE DRAIN (BURIED) PER STATE STD. D87A. PROVIDE A MIN. OF 4 PIPE ANCHORS AND CONSTRUCT A.C. (3" THICK) APRONS AT EACH END. GRADE TO DRAIN.
+30 BEGIN VARIABLE THICKNESS A.C. OVERLAY
+68 BEGIN REMOVAL OF EXIST. R.C.C. S/W & CONST. OF A.C. S/W
SPEE E/W
+94.40 BEGIN C&G REMOVAL
BEGIN PVMT REMOVAL
REMOVE TREE
411
200 I
6" C.F.
A
111
250 I
+05
+68 END C&G & BEGIN BERM
+88 BEGIN BERM RETURN @ 26.2' LT.
+98 END PVMT REMOVAL
+89 BEGIN BERM RETURN @ 22' LT.
+92.5 END BERM & RETURN @ 33' LT.
2879
2867
* OMIT BERM
+6 BEGIN BERM @ 32' LT.
+43 END BERM @ 32' LT.
+6 BEGIN PVMT REMOVAL
MEET EXIST.
406
+21.87
Vc = 4.88' W = 6'-4¾"
250 I
+15 END BERM @ 32' LT.
END PVMT REMOVAL MEET EXIST.
10+20 END VARIABLE THICKNESS OVERLAY
TRUCK SCALE
SEE NOTE 5
OVERLAY AREA FOR MATCH UP
CUT EXIST. CURB AND REMOVE TO 32' LT.
CONSTRUCT 6' A.C. S/W
PLACE TYPE "L" MARKER (TYP. 3 PLACES)
℄ FIRST STREET
℄ POPLAR STREET
MAIN STREET
R/W
49.5'
22'
24'
32'
8" W
12" S
CONSTRUCT 39" S.D. (SEE PROFILE SHT. 3)
REMOVE EXIST. UNION PACIFIC RAILROAD BRIDGE AND ABUTMENTS 9 TO 2 FEET BELOW FINISHED GRADE.
SEE NOTE 3
PLACE TYPE "L" MARKER
BOX CULVERT
54" SD
REMOVE EXIST. SOUTHERN PACIFIC RAILROAD BRIDGE AND ABUTMENTS TO 2 FEET BELOW FINISHED GRADE.
CONST. 6" S.D. (SEE NOTE 4)
+84.95 MEET EXIST. 36" S.D.
560
REMOVE EXIST. WOOD RETAINING WALLS TO 2' BELOW ADJACENT EXIST. STREET GRADE
CONSTRUCT 39" S.D. (SEE PROFILE SHT. 3)
D.I.D.S.D. = 93.54 ET. @ 343.34' ℄ MAIN ST. CENTER OF JUNCTION STRUCTURE. SEE DETAIL SHT. 3)
+28 END BERM @ 32' RT. END PVMT REMOVAL. MEET EXIST.
+00 BEGIN PVMT REMOVAL MEET EXIST.
UPSEE E/W
2896
2886
2878
2876
2836
2822
2804
* +45.70 +54.70 BEGIN C&G & BEGIN PVMT REMOVAL
+37 ± END BERM & RETURN @ 25.5' ET.
END BERM & RETURN @ 25.5' ET.
SLOPE E/W
6" C.F.
200 I
A
250 I
NOTES:
1. MAIN STREET EXIST. STRUCTURAL SECTION IS 4" THICK P.C.C. WITH A VARIABLE THICKNESS OVERLAY.
2. ROUND CUT SLOPES TO 2:1 (THEORETICAL SLOPE LIMITS ARE SHOWN ON RAILS)
3. REMOVE EXIST. C.B.'S AND S.D.'S IN REMOVAL AREAS. PLUG REMAINING PORTIONS OF PIPE.
4. IF EXIST. 6" S.D. IS STEEL PIPE, WELD PROP. 6" S.D. TO THE EXIST. IF THE EXIST. IS ANOTHER MATERIAL, CONSTRUCT A CONCRETE COLLAR PER STD. 581.
5. REMOVE EXIST. BUILDING TO THE LIMITS INDICATED. THE CONCRETE WALLS ARE PIERS FROM AN OLD RAILROAD BRIDGE. THESE ARE TO BE REMOVED TO A MINIMUM OF 2' BELOW FINISHED GRADE. THE ROOF AND RAFTERS ARE TO BE CUT AT THE SAME LIMITS AS SHOWN. THE CONCRETE FLOOR SHALL BE REMOVED TO 35' LT. OF ℄ MAIN ST., ALSO REMOVE THE FLOOR THAT IS IN THE FILL SLOPE AREA. THE REMAINING FLOOR SHALL BE OVERLAYED TO DRAIN OVER THE BERM. (SEE TYPICAL SECTION SHT. 3)
6. CUT SLOPES ARE TO BE SEEDED. (SEE SPECIAL PROVISIONS.)
Underground Service Alert
CALL BEFORE YOU DIG
Call: TOLL FREE
1-800 422-4133
TWO WORKING DAYS BEFORE YOU DIG
* AS BUILT 2-24-84 L.L.D
INDEX NO
ACCOUNT NO 30-575-287-05,07
CITY OF RIVERSIDE
PUBLIC WORKS DEPARTMENT
PROJ. ENGR.
PRINCIPAL E
DEPUTY DIR.
TR., FFIC DIVISION
CHIEF F. W. ENGINEER
DATE
BY
APPROVED BY
PUBLIC WORKS DIRECTOR
DATE 6/13/83
REVISIONS
APPR
DATE
4-19-83 GW
DESIGNED BY
DRAWN BY
CHECKED BY
HORIZ. SCALE: 1" = 20'
VERT. SCALE: 1" = 2'
MAIN STREET AT S.P. AND U.P. BRIDGES
R-2262
SHEET 2 OF 4

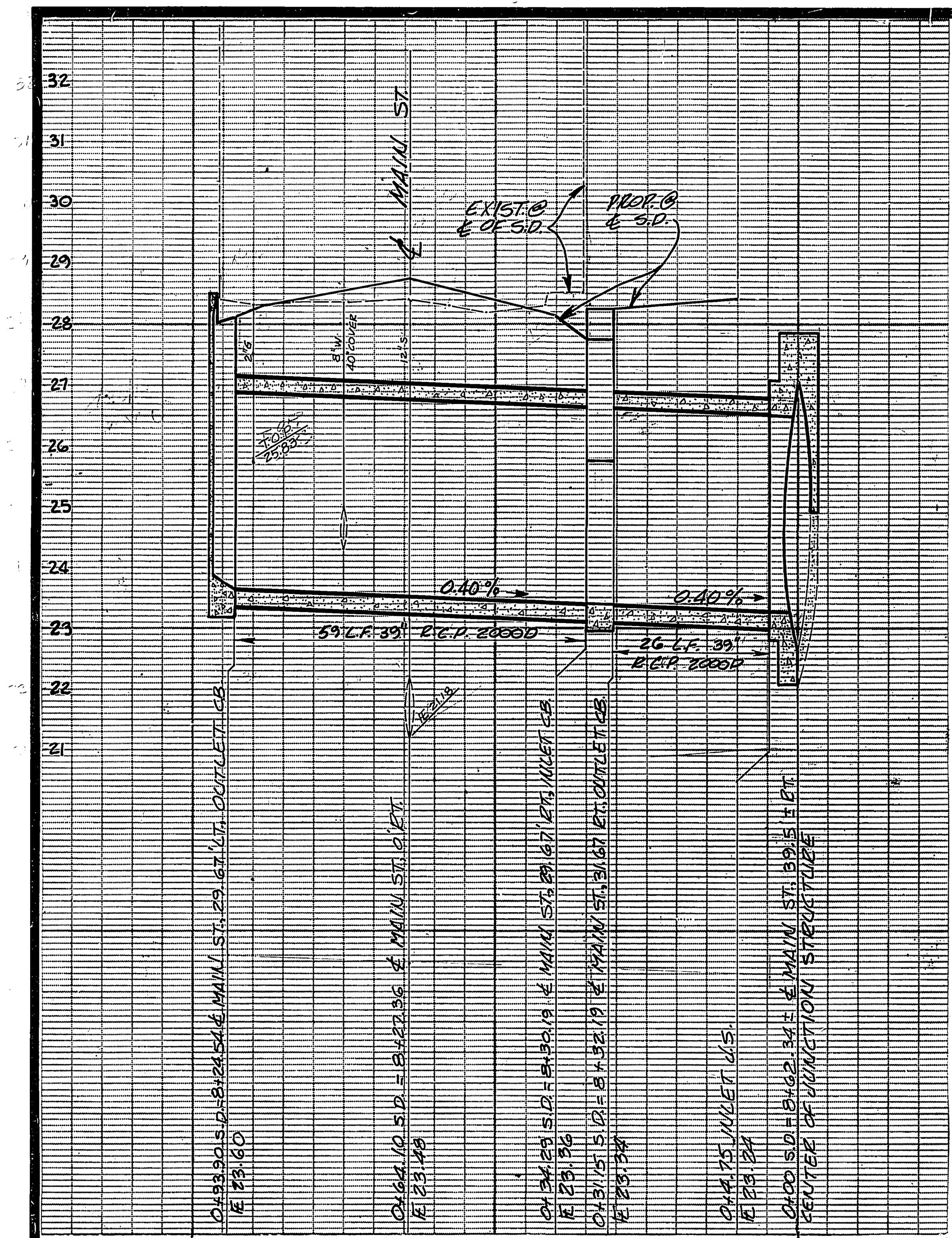

STORM DRAIN PROFILE

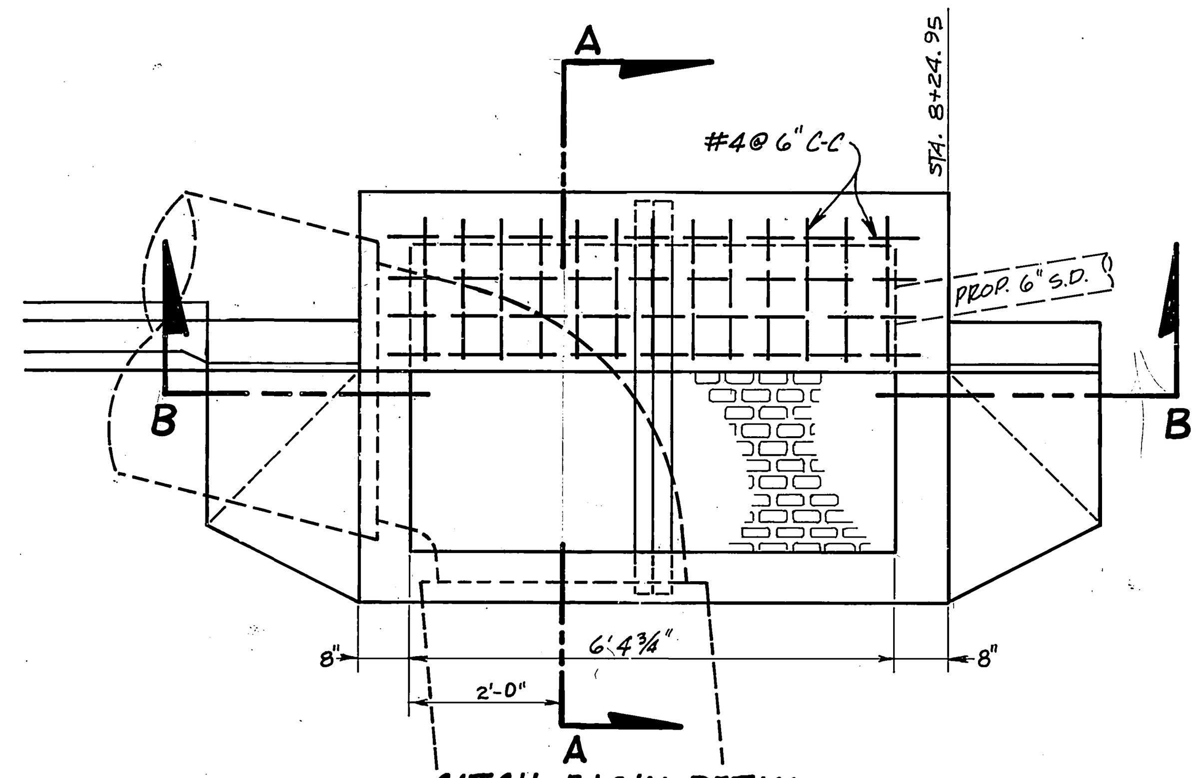

CATCH BASIN DETAIL (STA. 8+24.95, RT)
N.T.S.

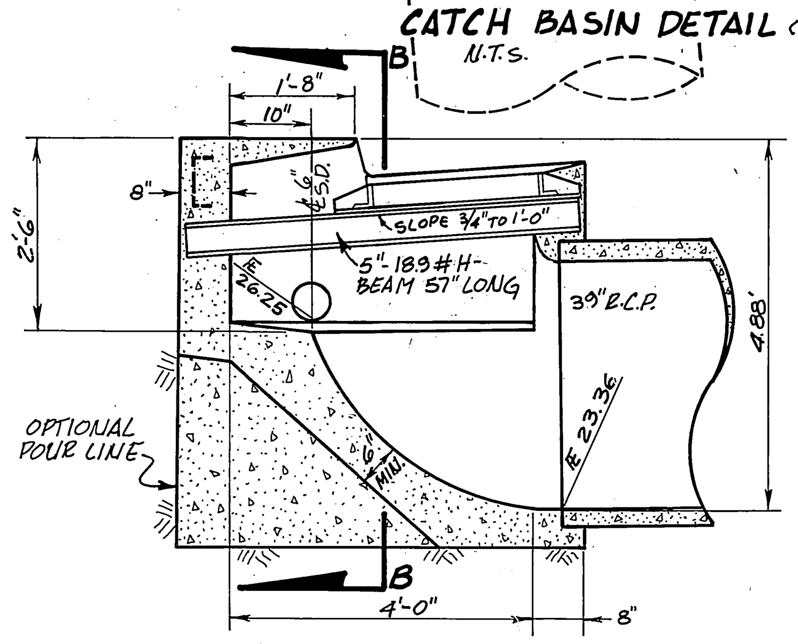

SECTION A-A
N.T.S.

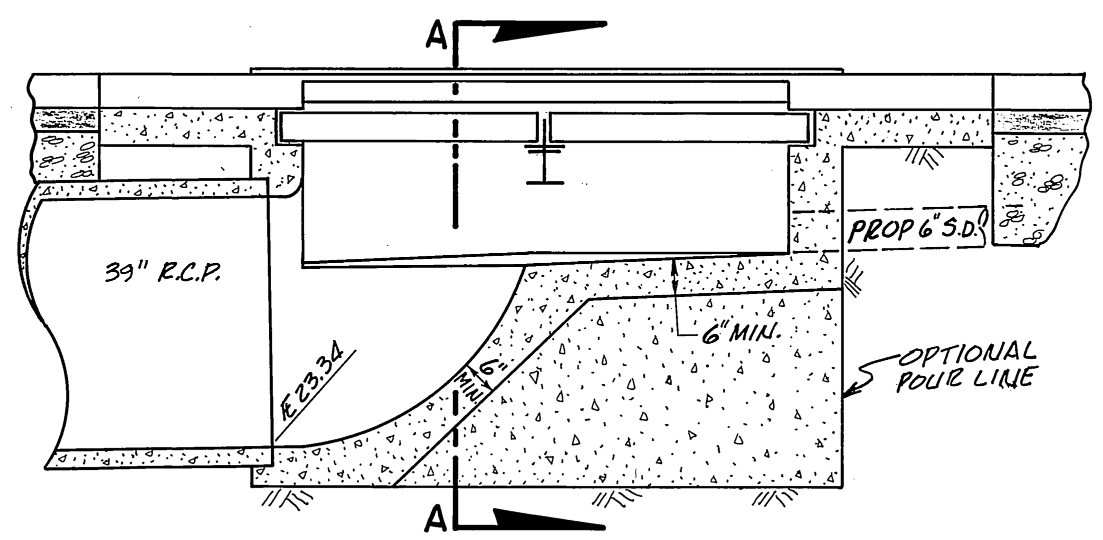

SECTION B-B
N.T.S.

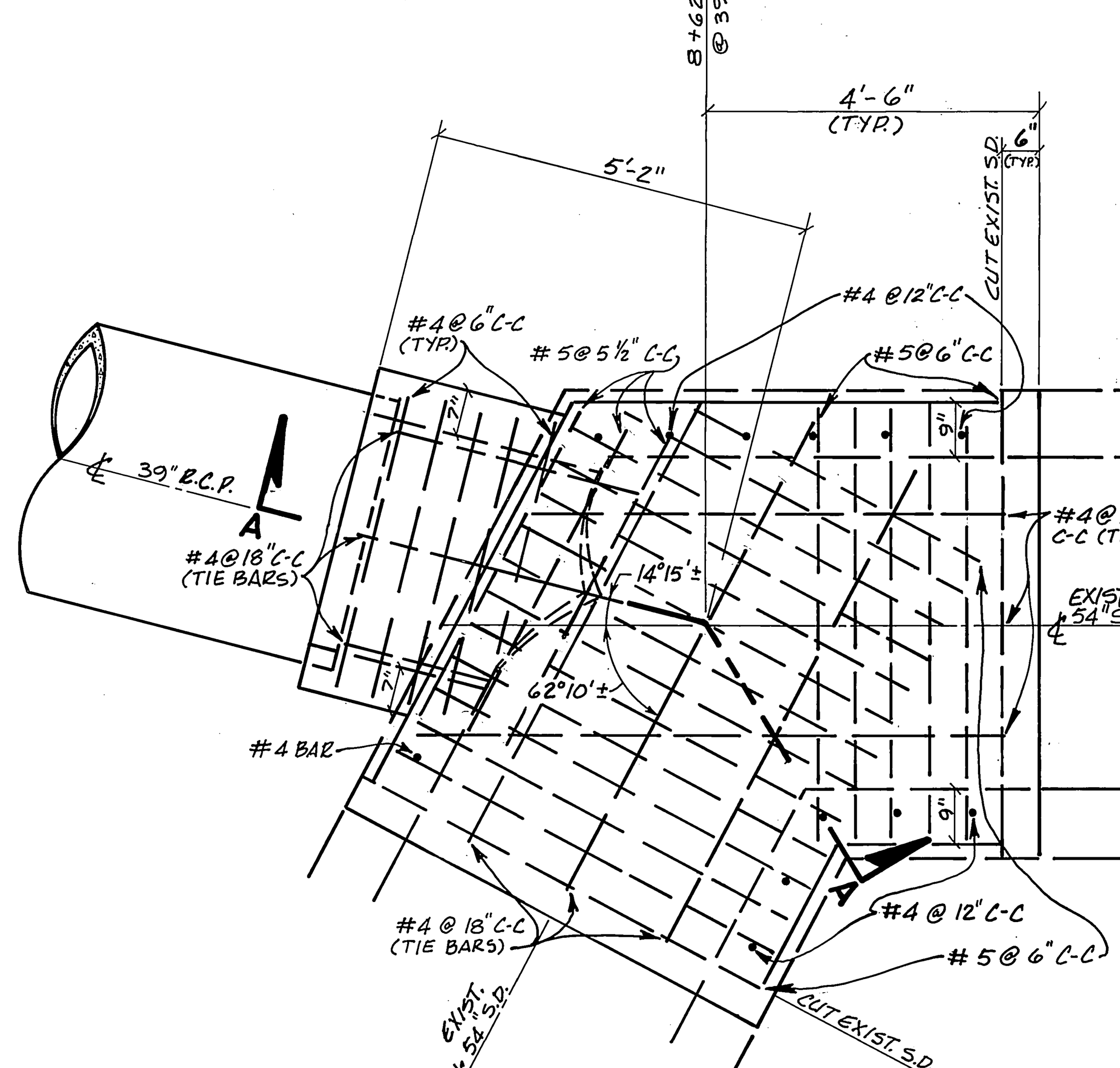

JUNCTION STRUCTURE DETAIL
STA. 8+62.34± @ 39.5' RT., ℄ MAIN ST.
N.T.S.

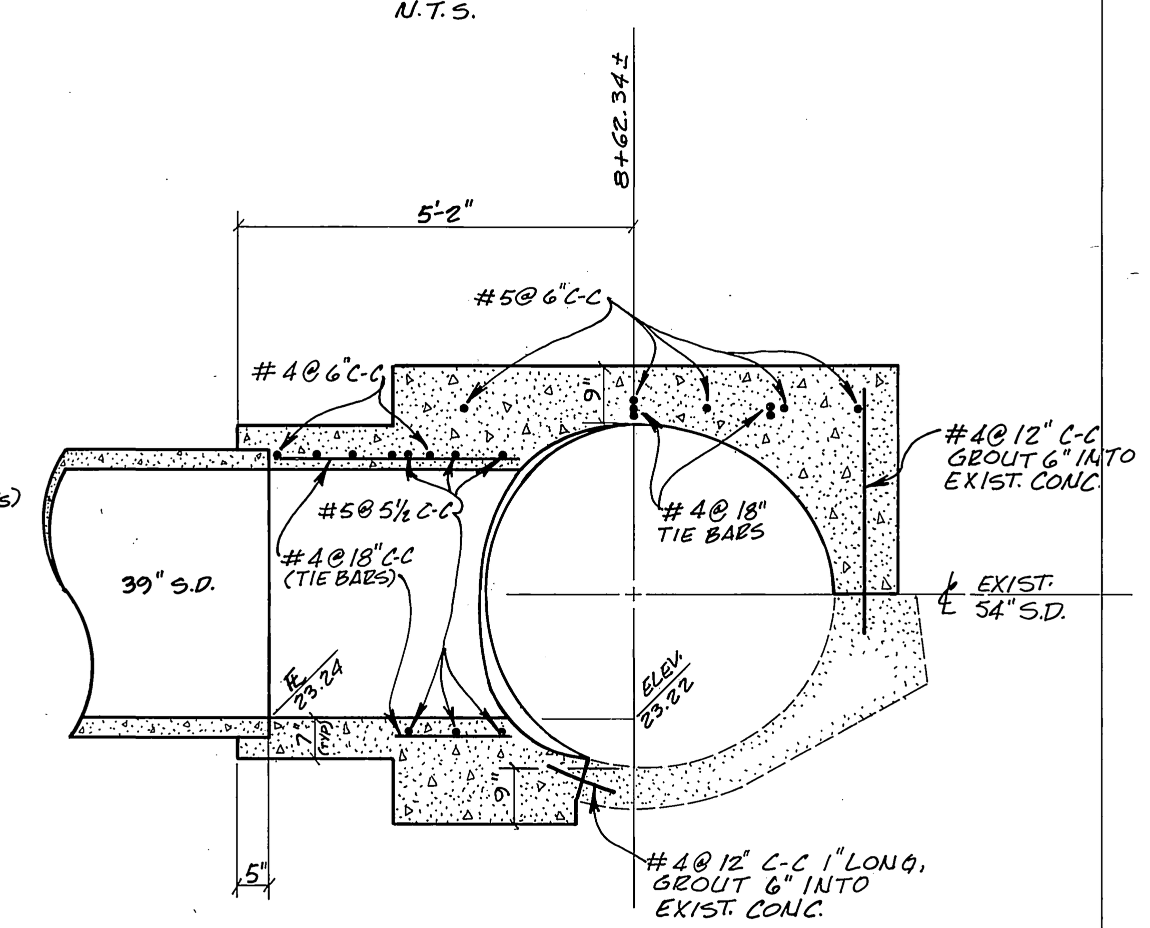

SECTION A-A
N.T.S.

NOTE:

1. WHEREVER NEW CONCRETE CONTACTS EXIST. CONCRETE, AN EPOXY BONDING AGENT SHALL BE USED.
2. LOCATION AND SHAPE OF EXIST. 54" S.D. IS ACCORDING TO "AS BUILT" PLANS. ADJUSTMENTS MAY BE NECESSARY TO FACILITATE THE CONSTRUCTION OF THE JUNCTION STRUCTURE.

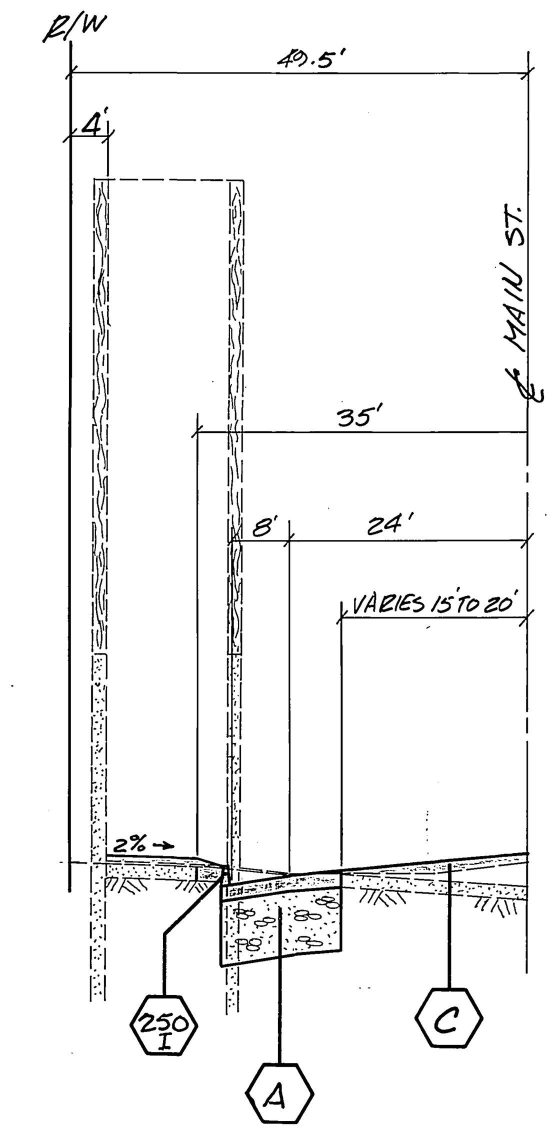

TYPICAL SECTION
STA. 8+16 TO STA. 8+55
N.T.S.

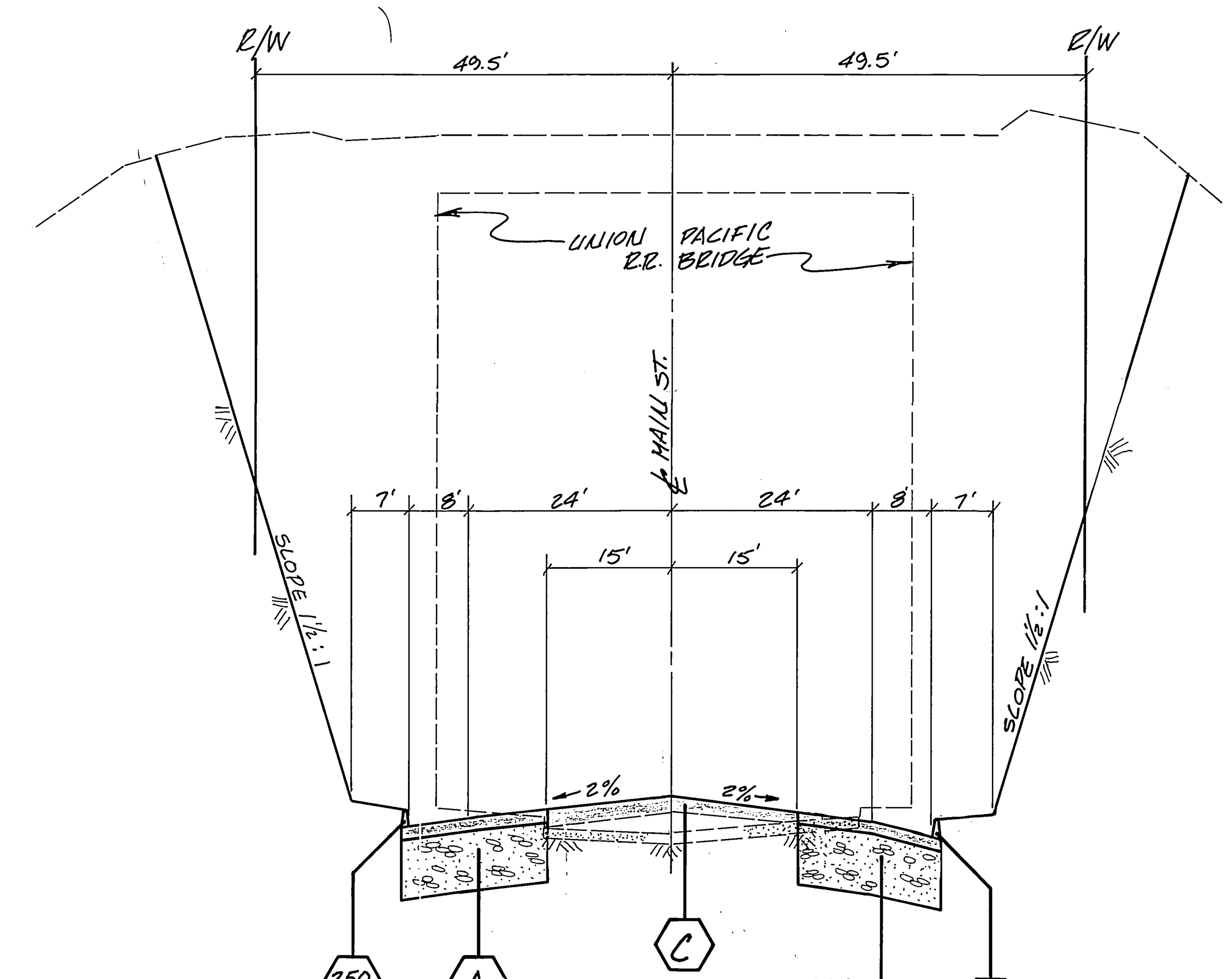

TYPICAL SECTION
LT. SIDE STA. 8+55 TO STA. 9+15
RT. SIDE STA. 8+20 TO STA. 8+62
N.T.S.

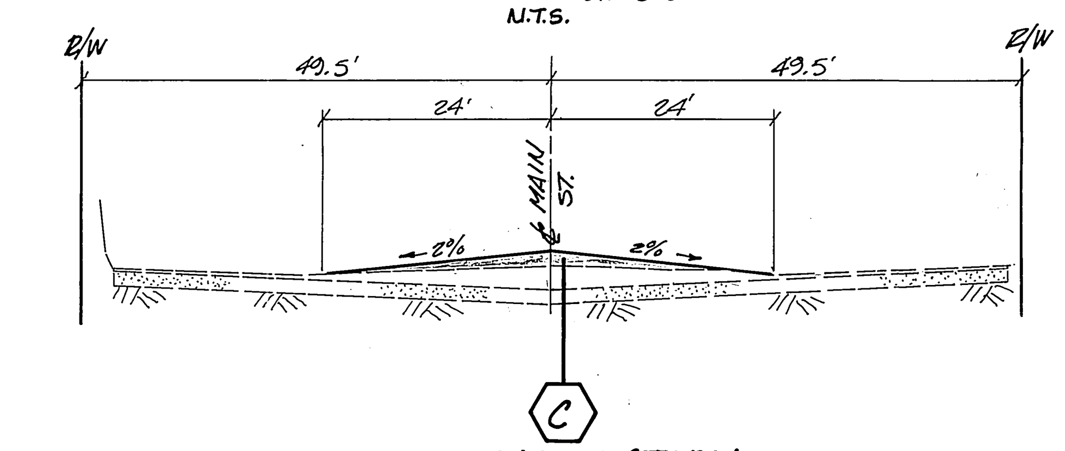

TYPICAL SECTION
LT. SIDE
STA. 5+78 TO STA. 8+16
STA. 9+15 TO STA. 9+50
RT. SIDE
STA. 6+37 TO STA. 8+00
STA. 8+62 TO STA. 9+50
N.T.S.

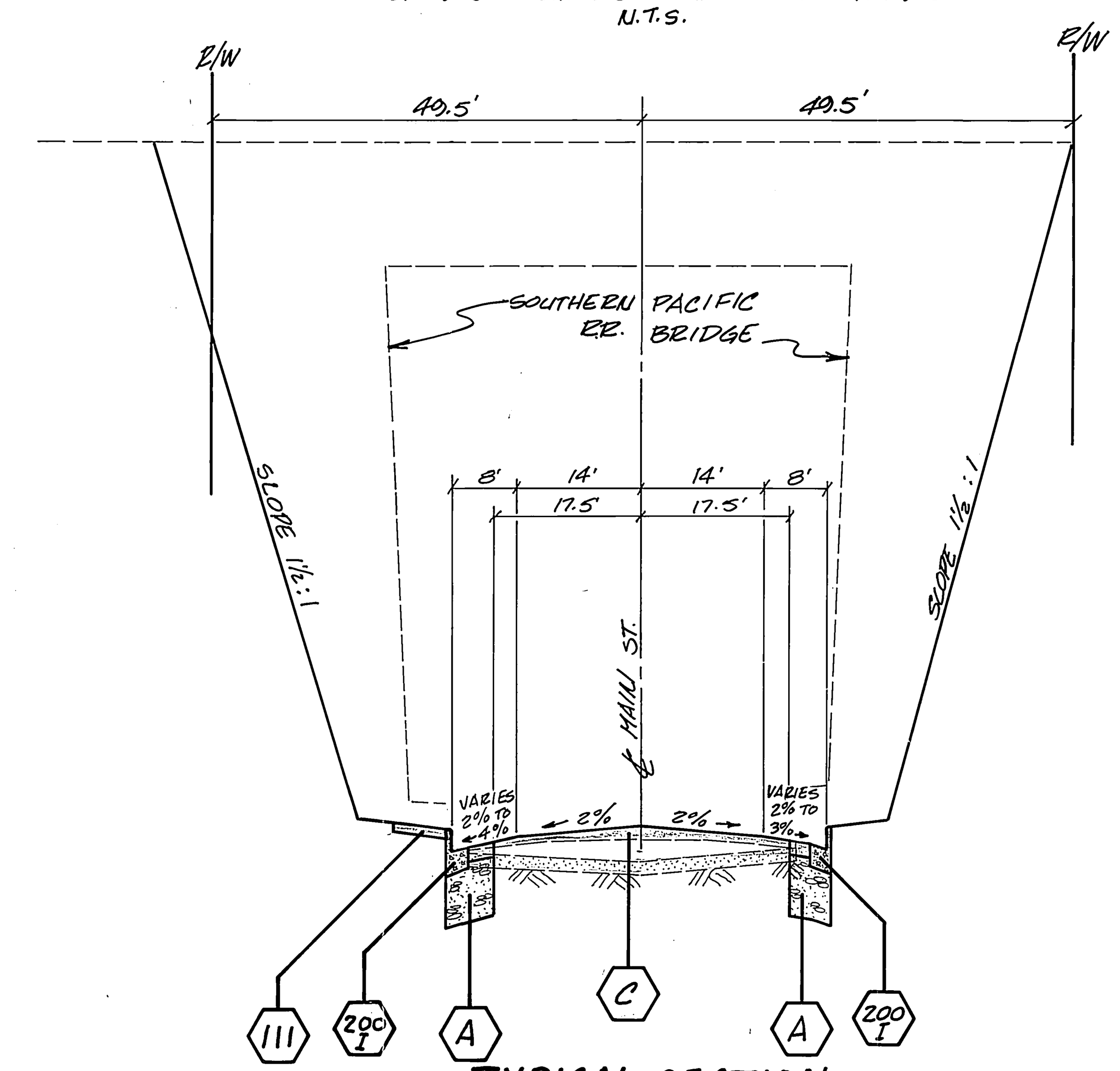

TYPICAL SECTION
LT. SIDE STA. 4+94.40 TO STA 5+68
RT. SIDE STA. 5+54.70 TO STA. 6+32
N.T.S.

"AS BUILT" 2-24-84 BLD

INDEX WF

MARK	REVISIONS	APPR.	DATE

DESIGNED BY JC DRAWN BY CR CHECKED BY AH

CITY OF RIVERSIDE
PUBLIC WORKS DEPARTMENT

APPROVED BY	DATE	BY
PRINCIPAL ENGINEER		
~~PARK DEPARTMENT~~		
TRAFFIC DIVISION	4-19-83	JMW
CHIEF P. W. ENGINEER		6/13
4/21/83		

APPROVED BY [signature]
PUBLIC WORKS DIRECTOR
DATE 6/13/83

MAIN STREET AT S.P. AND U.P. BRIDGES

HORIZ. SCALE: 1" = AS NOTED VERT. SCALE: 1" = AS NOTED

ACCOUNT NO 30-575-287-05,07

R-2262

SHEET 3 OF 4

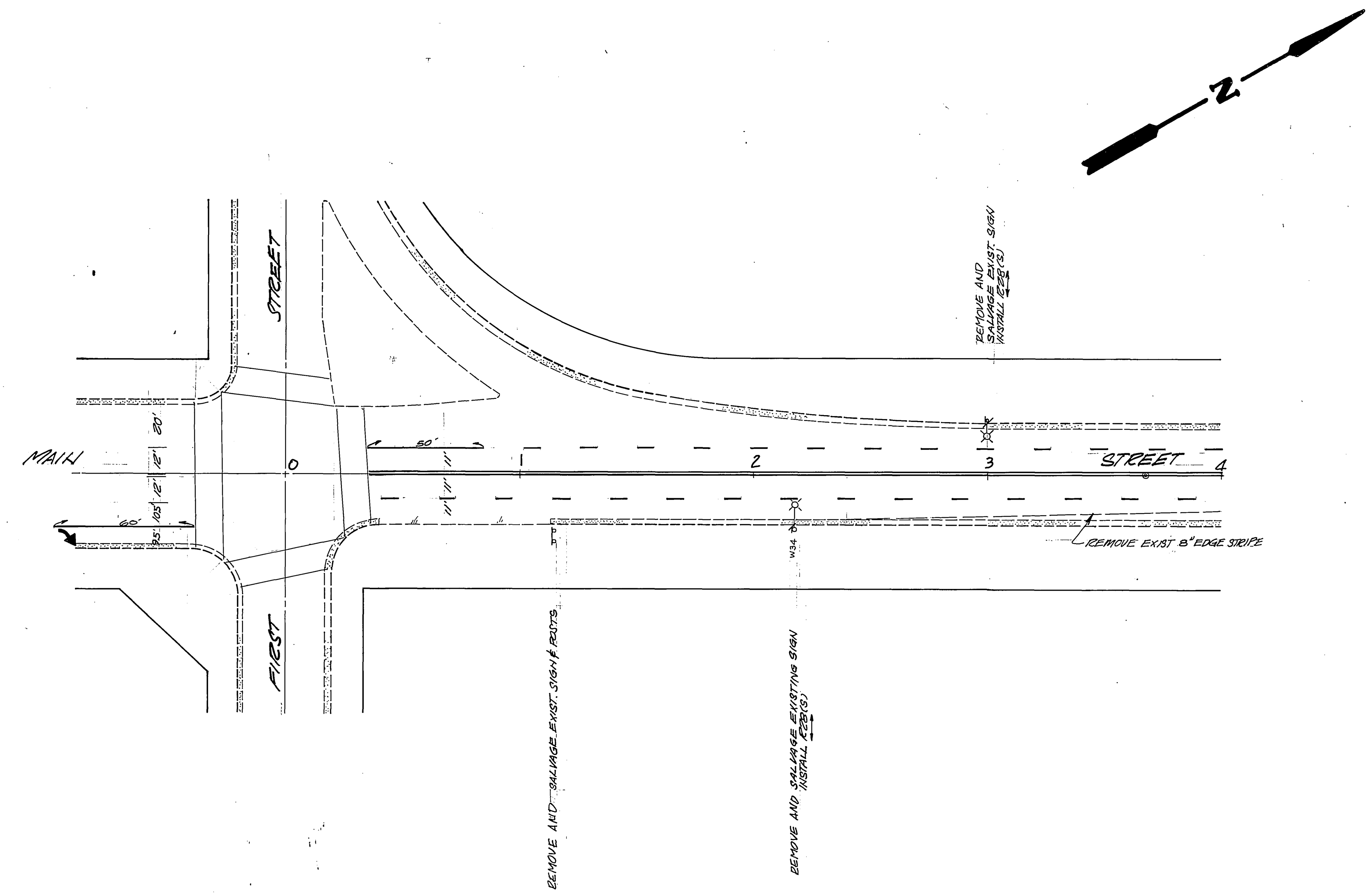

SIGNING AND STRIPING NOTES

1) STRIPING * ~~LIMITS - FIRST TO POPLAR INCLUDING RIGHT TURN LANE AND ARROW SOUTH OF FIRST.~~ *NO STRIPING WAS PLACED EXCEPT DOUBLE YELLOW THROUGH OVERLAYED AREA.

2) PLACE EXISTING R32'S ON NEW POSTS AND PLACE NEW R24'S BELOW EXISTING R32'S; SALVAGE POST.

3) ALL R24'S, R28(S) AND R32'S NEW AND EXISTING SHALL BE ERECTED OR TURNED 45° TOWARD THE ROADWAY.

4) ALL SIGN INSTALLATIONS TO BE IN ACCORDANCE WITH CITY STANDARD DRAWING 666.

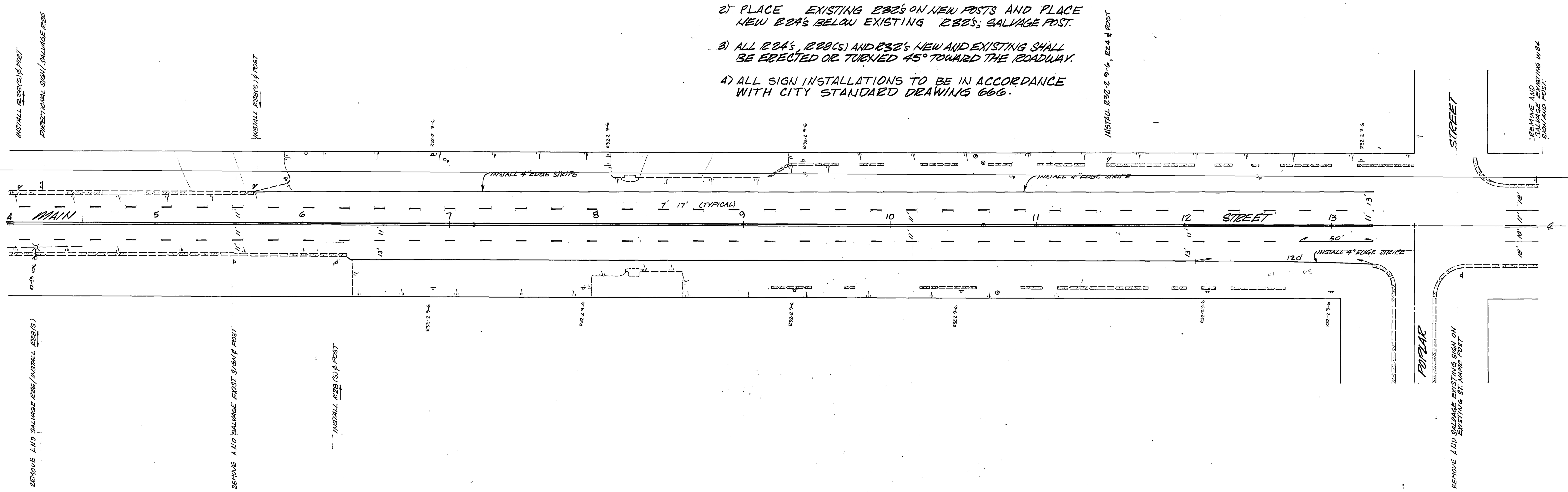

*'AS BUILT' 2-24-84 BLD

INDEX WF

MARK	REVISIONS	APPR.	DATE

DESIGNED BY JMW DRAWN BY MWL CHECKED BY JMW

CITY OF RIVERSIDE
PUBLIC WORKS DEPARTMENT

APPROVED BY	DATE	BY
PRINCIPAL ENGINEER		
~~PARK DEPARTMENT~~		
TRAFFIC DIVISION	4-19-83	JMW
CHIEF P. W. ENGINEER		6-13

APPROVED BY Robert C. Wales
PUBLIC WORKS DIRECTOR
DATE 6/13/83

STRIPING & SIGNING PLAN

MAIN STREET AT S.P. AND U.P. BRIDGES

HORIZ. SCALE: 1" = 40' VERT. SCALE: 1" =

ACCOUNT NO. 30-575-287-05, 07

DRAWING NUMBER

R-2262

SHEET 4 OF 4