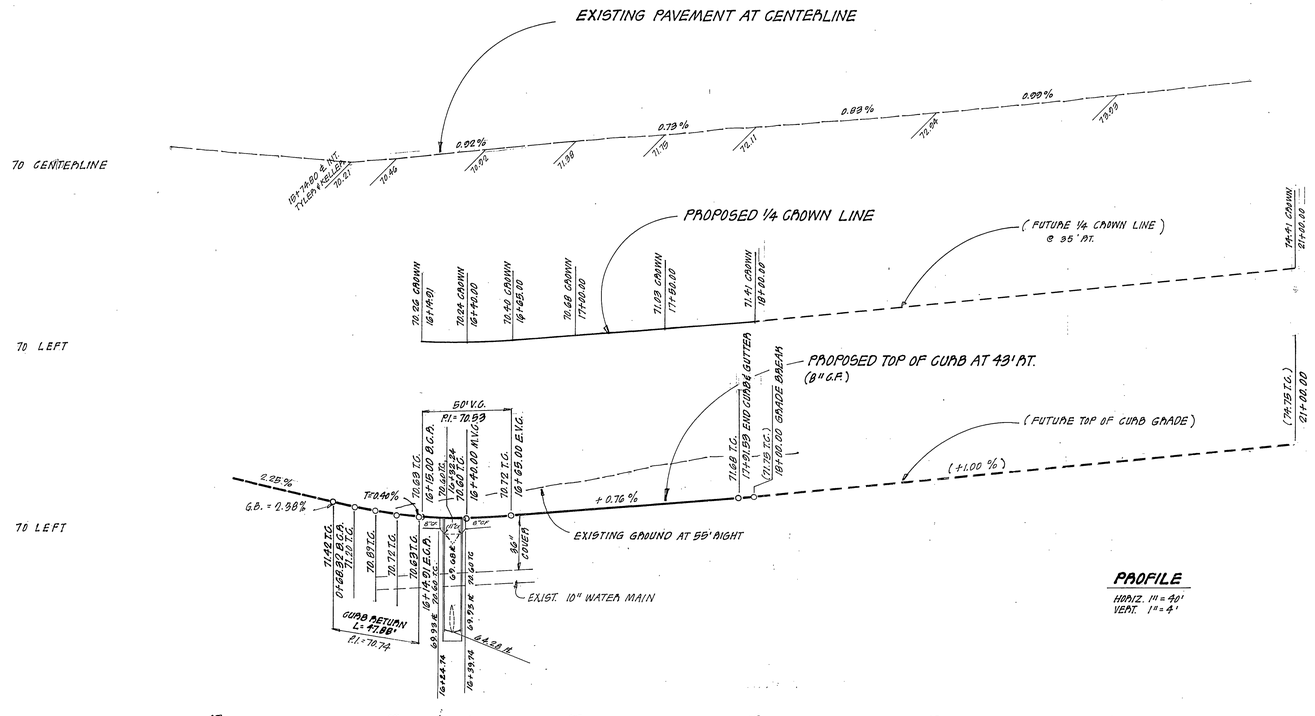

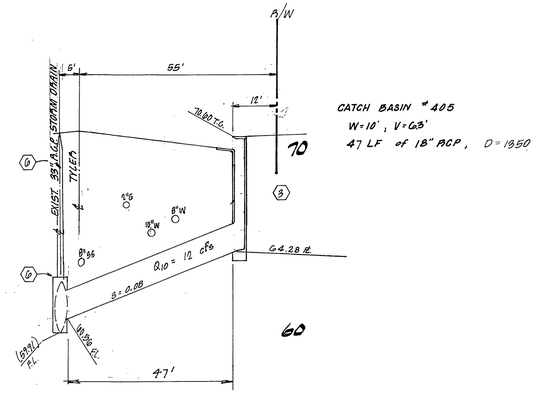

CATCH BASIN # 405
W=10', V=G3'
47 LF of 18" RCP, D=1350

PROFILE - 18" R.C.P. D=1350
Scale: 1"=20' Horiz.
1"=4 Vert.

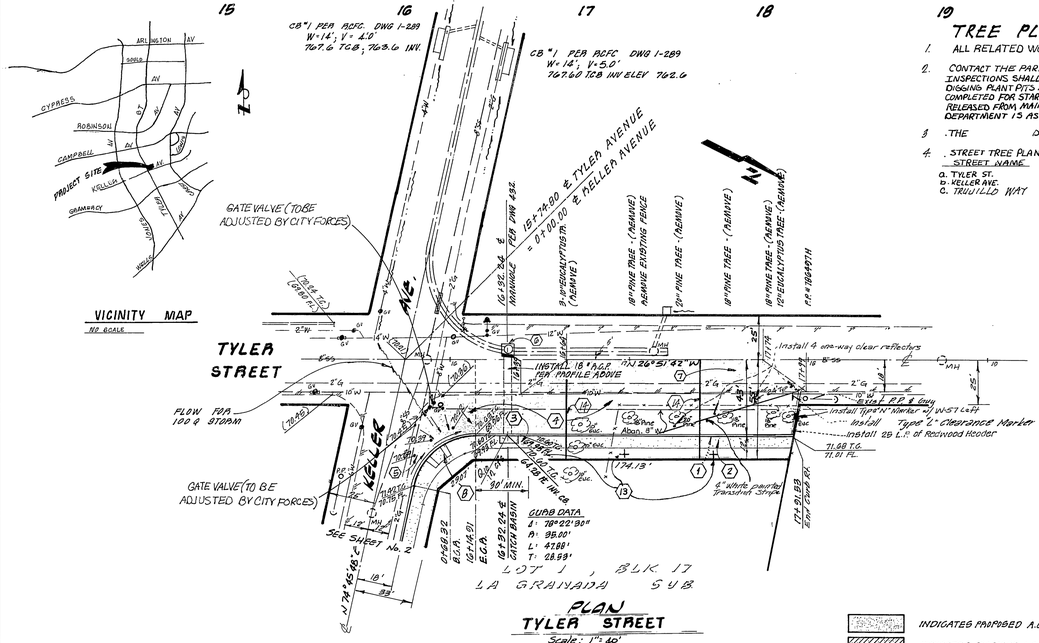

INDICATES PROPOSED A.C. PAVING

INDICATES PROPOSED A.C. PAVING OVERLAY

TREE PLANTING NOTES:

1. ALL RELATED WORK SHALL CONFORM TO THE CITY OF RIVERSIDE, PARK AND RECREATION DEPARTMENT STANDARDS.
2. CONTACT THE PARK PROJECTS INSPECTOR A MINIMUM OF 48 HOURS IN ADVANCE AT 787-7223 TO SCHEDULE INSPECTIONS. INSPECTIONS SHALL BE REQUIRED: a) WHEN PLANT LOCATIONS HAVE BEEN SPOTTED IN THE FIELD PRIOR TO DIGGING PLANT PITS, b) WHILE DIGGING PLANT PITS AND PLANTING/RELOCATING TREES, c) AFTER PLANTING AND ALL OTHER INDICATED OR SPECIFIED WORK HAS BEEN COMPLETED FOR START OF MAINTENANCE AND d) AT END OF MAINTENANCE/FINAL ACCEPTANCE. DEVELOPER WILL BE RELEASED FROM MAINTENANCE ONLY UPON RECEIPT OF WRITTEN NOTIFICATION FROM THE CITY THAT THE PARK AND RECREATION DEPARTMENT IS ASSUMING MAINTENANCE RESPONSIBILITY).
3. THE DEVELOPER SHALL MAINTAIN ALL PLANTING FOR A MINIMUM PERIOD OF ONE (1) YEAR.
4. STREET TREE PLANTING SHALL BE AS FOLLOWS:

STREET NAME	BOTANICAL/COMMON NAME	MIN. SIZE	APPROX. SPACING
a. TYLER ST.	PYRUS CALLERYANA 'BRADFORD'/BRADFORD PEAR	15 GAL.	± 50'
b. KELLER AVE.	EUCALYPTUS POLYANTHEMAS/RED BOX EUCALYPTUS	15 GAL.	± 50'
c. TRUJILLO WAY	QUERCUS ILEX/HOLLY OAK	15 GAL.	± 50'

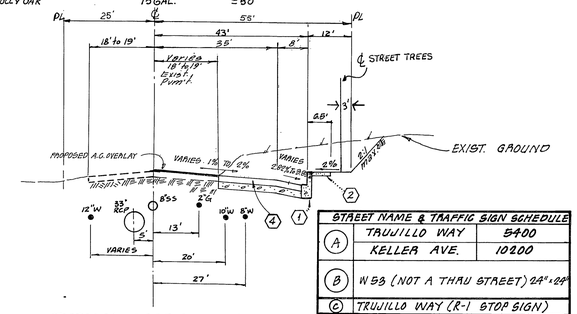

TYPICAL SECTION - TYLER STREET
NO SCALE
T.I. = 8
CONST. PER CITY OF RIVERSIDE STANDARD NO. 6621-A.

STREET NAME & TRAFFIC SIGN SCHEDULE		
A	TRUJILLO WAY	5400
	KELLER AVE.	10200
B	W 53 (NOT A THRU STREET) 24"x24"	
C	TRUJILLO WAY (R-1 STOP SIGN)	

ITEM	QUANTITIES
6" CURB AND GUTTER	174 LF
CROSS GUTTER & SPANDREL	344 SF
BARRICADE	1 EA.
8" Curb and Gutter	594 L.F.
Conc. Sidewalk	5755 S.F.
2½" A.C. Pvmt.	7870 S.F.
3" A.C. Pvmt.	4810 S.F.
Warning Signs	3 Each
Catch Basin	1 Each
18" R.C.P.	48 L.F.
Junction Structure	1.9 C.Y.
2"x 4" Redwood Header	253 L.F.
CONC. DRIVEWAY APPROACH	1 EA.

CONSTRUCTION NOTES CONT'D

(9) PLACE ___" AC. PAVEMENT OVER ___" D.G. BASE, OVER COMPACTED SUBGRADE (TRUJILLO WAY) PER G.R. ____ R. = ____
(10) INSTALL 2"x4" REDWOOD HEADER
(11) CONSTRUCT CONCRETE CURB & GUTTER PER STD. NO. 200 (6"CF) TYPE I
(12) CONSTRUCT CONCRETE CROSS GUTTER PER CITY STD NO. 230
(13) PLANT STREET TREES PER CITY OF RIVERSIDE PARKS AND RECREATION STANDARDS @ 50' CENTERS.
(14) CONST. 4" V.C.P. LATERAL PER CITY OF RIVERSIDE STD. NO. 502.
(15) CONST. BARRICADE PER CITY STD. 180
(16) CONST. CONC. DRIVEWAY APPROACH PER CITY OF R.I.V. STD. 302 (TYPE 'E')

GENERAL NOTES

1. DEVELOPER TO GIVE CITY WATER DIVISION FIVE(5) WORKING DAYS, WRITTEN NOTICE PRIOR TO START OF CONSTRUCTION AND TO ALLOW CITY TEN (10) WORKING DAYS FOR COMPLETION OF WORK. (787-7611)
2. It shall be the responsibility of the contractor to clear the right of way in accordance with the provisions of law as it affects each utility including irrigation lines and appurtenances and at no cost to the city.
3. Construction shall be in accordance with the City of Riverside, Department of Public Works, Standard Drawings, and the Standard Specifications of Public Works Construction, 1979 Edition.
4. Trim edge of existing pavement where new pavement joins to a smooth straight edge. Match up paving as shown on plan and overlay paving as directed in the field to produce a smooth section. Engineer estimates overlay to be 4.0 tons.
5. Curb and gutter shall be staked with 3' offsets at 25' intervals.
6. Construct driveway approaches per Std. Dwg. No. 302.
7. FOR LOCATION OF ALL EXIST. UNDERGROUND UTILITIES CONTACT UNDERGROUND SERVICE ALERT (U.S.A.) @ 1-800-422-4133.
8. Quantities shown are for information only and the City of Riverside is not responsible for their accuracy.
9. The subdivider shall arrange for a soil test to be made by a soils engineer after the streets have been prepared to rough grade. Depth of base material and A.C. paving shall be determined by the City of Riverside design standards and test procedures.
10. All flagged elevations shall be staked in the field by the private engineer.
11. All testing and certification of the treated base shall be at the developers cost.
12. Developer to give R.C.F.C. 5 days written notice prior to starting work on storm drain, (or doing any work within R.C.F.C. easements.)
13. 4"x 4" blockouts for mail boxes required in curb sidewalk.
14. Notify Parks and Recreation Department at 787-7518 48 hours prior to tree removal

CONSTRUCTION NOTES

(1) Construct conc. Curb and gutter per Std. No. 200 (8"C.F.) Type I
(2) Construct conc. Sidewalk per Std. No. 325
(3) Construct conc. catch basin per Std. No. 405 W=10', V=G.3'
(4) Place ___" A.C. pavement over ___" D.G. base over compacted subgrade. (TYLER AVENUE) PER G.R. NO. ____ R=
(5) PLACE ___ AC. PAVEMENT OVER ___ D.G. BASE OVER COMPACTED SUBGRADE (KELLER AVENUE) PER G.R. No. ____ R=
(6) CONSTRUCT MANHOLE J.M. PER CITY STD. NO. 482 (Δ=90°; R=18'; G=21-6"; D=98"; D_2=98"; E=1.93'; L=2'-6" R=760.56'; S=7.62.98)
(7) CONSTRUCT VARIABLE A.C. PAVEMENT OVERLAY
(8) Construct Wheelchair Ramp per Std. No. 304

ENGINEERS NOTE

The private engineer signing these plans is responsible for assuring the accuracy and acceptability of the work thereon. In event of discrepancies arising during construction as a result of errors or ommissions, the private engineer shall be responsible for determining an acceptable solution and revising the plans for approval by the city.

William J. McKeever — 10-4-77
WILLIAM J. McKEEVER R.C.E. 22502 — DATE

PLANS CHECKED AND FOUND TO COMPLY WITH CITY OF RIVERSIDE REQUIREMENTS:
BY W.B.C. BERNHARD & STEPHENSON INC. R.C.E. 10354 — 3-10-81 DATE

SOUTHERN CALIFORNIA GAS CO.
APPROVED BY: O.M. Jones — 3/9/81 DATE

PUBLIC UTILITIES DEPARTMENT, WATER
APPROVED Glad Lantz — DATE 12/10/80
FOR WATER SYSTEM MANAGER

BENCH MARK 62-P
P.K. nail & tag in the center of the N.W. curb return at Tyler and Campbell.
Elevation 780.14

W. J. McKEEVER INC.
CIVIL ENGINEERING
RIVERSIDE CALIFORNIA
APPROVED BY William J. McKeever DATE 10-4-77
R.C.E. 22502

MARK	REVISIONS	APP.	DATE

DESIGNED BY DCS DRAWN BY DCS CHECKED BY ____

CITY OF RIVERSIDE CALIFORNIA
DEPARTMENT OF PUBLIC WORKS

	BY	DATE
APPROVED BY		
PRINCIPAL ENGINEER		
PARK DEPARTMENT		
TRAFFIC DEPARTMENT		
CHIEF R.W. ENGINEER		

APPROVED BY William D. Sanders DIRECTOR OF PUBLIC WORKS
DATE MAY 6, 1981

STREET PLAN AND PROFILE
ZONING CASE NO. R-8-778
TYLER STREET
KELLER AVE. TO 215' NORTH

HORIZ. SCALE 1"=40' VERT. SCALE 1"=4'

INDEXED BLD
PROJ. NO. R-2361
SHEET 1 OF 3
FILE NO.

P4-5

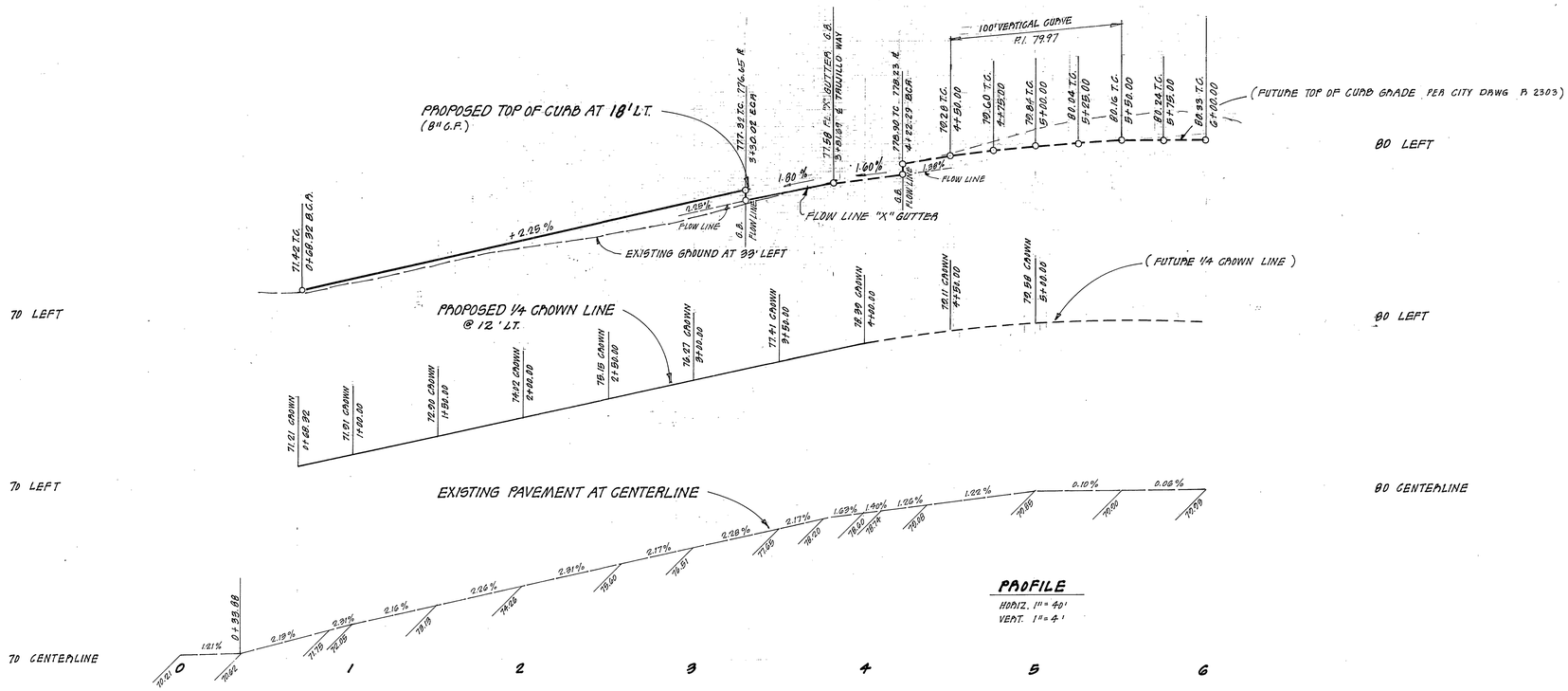

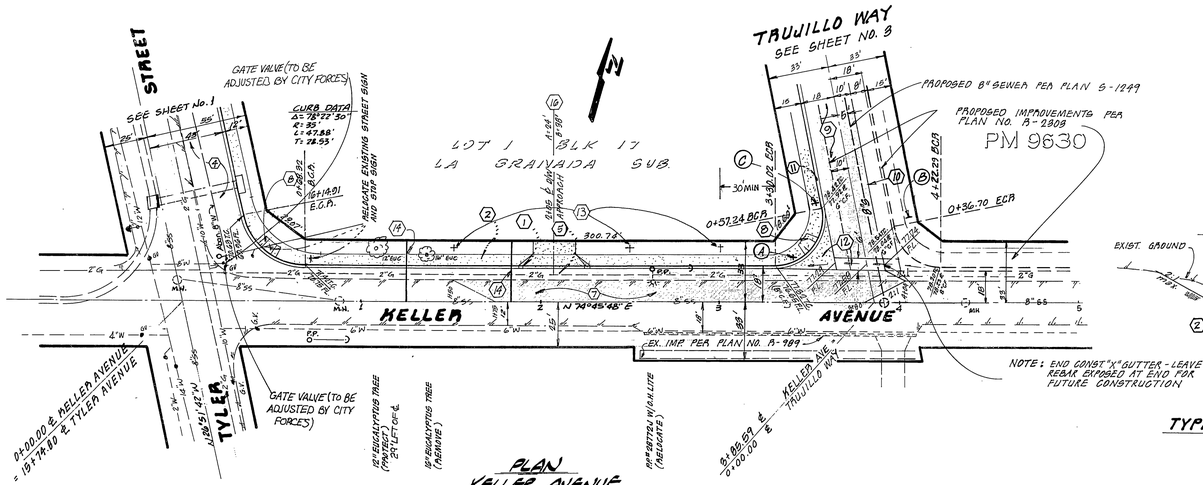

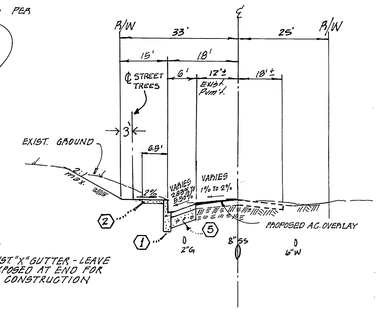

TYPICAL SECTION - KELLER AVENUE
NO SCALE
T.I. = 7

INDICATES PROPOSED A.C. PAVING
INDICATES PROPOSED A.C. PAVING OVERLAY

PLANS CHECKED AND FOUND TO COMPLY WITH CITY OF RIVERSIDE REQUIREMENTS:
BY Max Sloan RCE 10354 3-10-81
BERRYMAN & STEPHENSON INC. DATE

PUBLIC UTILITIES DEPARTMENT, WATER
APPROVED Fred Lantz DATE 12/10/80
FOR WATER SYSTEMS MANAGER

BENCH MARK G2-F
P.K. nail & tag in the center of the N.W. curb return at Tyler & Campbell
Elevation 780.14

W. J. McKEEVER INC.
CIVIL ENGINEERING
RIVERSIDE CALIFORNIA
APPROVED BY William J. McKeever DATE 10-4-77
R.C.E. 22502

CITY OF RIVERSIDE ELECTRIC CO.
APPROVED BY: [signature] 3-6-81
DATE

SOUTHERN CALIFORNIA GAS COMPANY
APPROVED BY: [signature] 3/2/81
DATE

MARK	REVISIONS	APP	DATE

DESIGNED BY DCS DRAWN BY DCS CHECKED BY W.J.M.

CITY OF RIVERSIDE CALIFORNIA
DEPARTMENT OF PUBLIC WORKS

APPROVED BY	BY	DATE
PRINCIPAL ENGINEER	-	-
PARK DEPARTMENT	[signature]	3/27/81
TRAFFIC DEPARTMENT	[signature]	3/26/81
CHIEF R.W. ENGINEER	[signature]	

APPROVED BY William D. Gardner
DIRECTOR OF PUBLIC WORKS
DATE May 6, 1981

STREET PLAN AND PROFILE
ZONING CASE NO. R-8-778
KELLER AVE.
FROM TYLER ST. TO 392' FEET EAST

HORZ. SCALE 1" = 40' VERT. SCALE 1" = 4'

INDEXED BLD
PROJ. NO. R-2361
SHEET 2 OF 3
FILE NO.

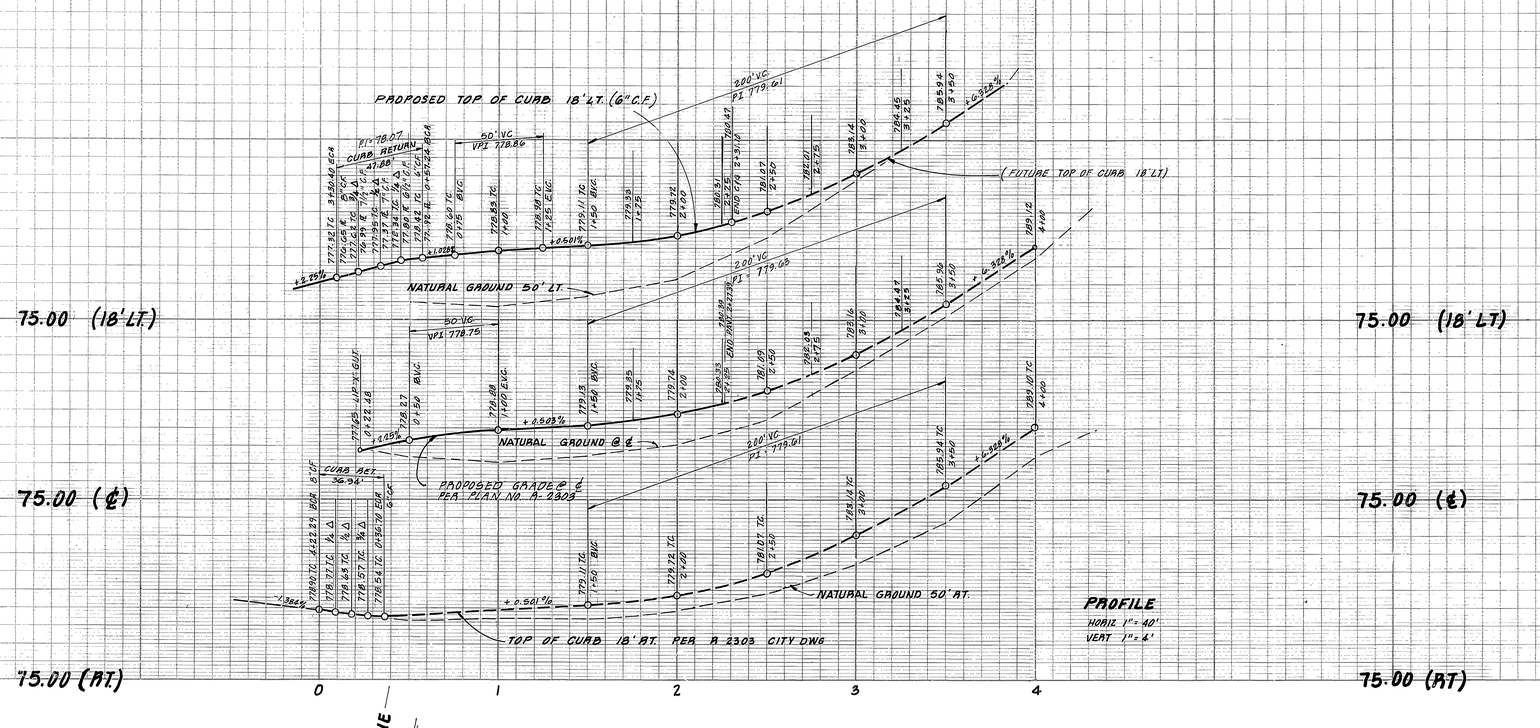

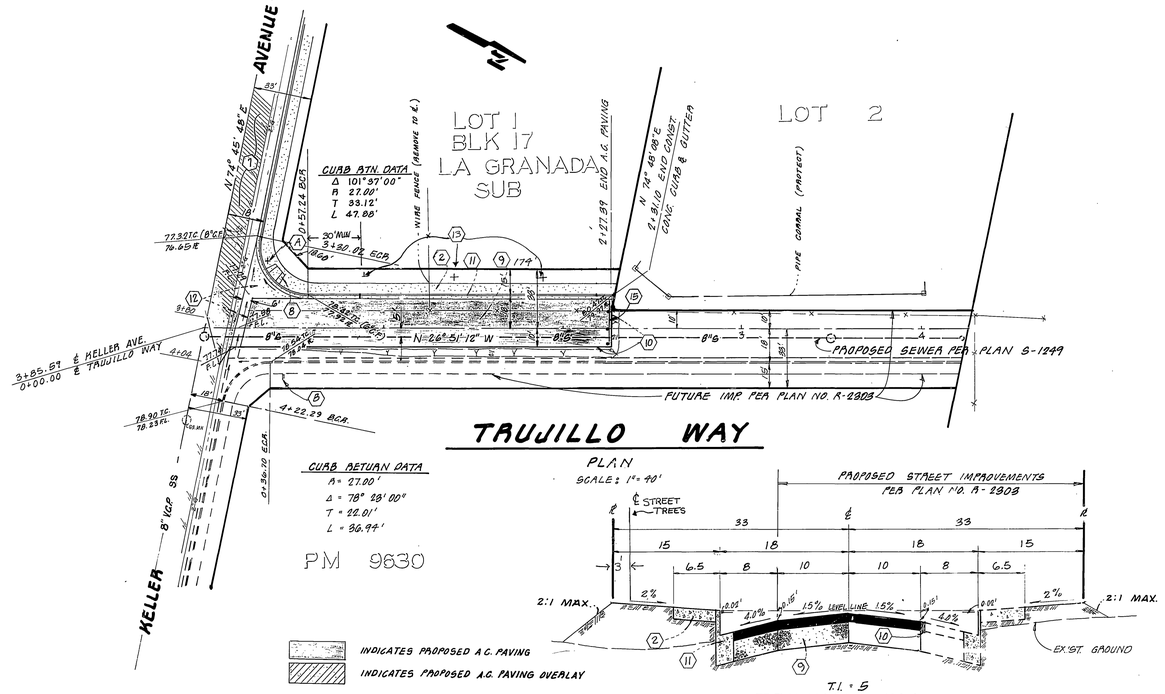

PLANS CHECKED AND FOUND TO COMPLY WITH CITY OF RIVERSIDE REQUIREMENTS:
BY Max Sloan RCE 10354 3-10-81
BERRYMAN & STEPHENSON INC. DATE

PUBLIC UTILITIES DEPARTMENT, WATER
APPROVED Fred Rantz DATE 12/10/80
FOR WATER SYSTEMS MANAGER

BENCH MARK 62-F
P.K. nail & tag in the center of the N.W. curb return at Tyler and Campbell
Elevation 780.14

W. J. McKEEVER INC.
CIVIL ENGINEERING
RIVERSIDE CALIFORNIA
APPROVED BY William J. McKeever DATE 11-6-80
R.C.E. 22502

MARK	REVISIONS	APP	DATE

DESIGNED BY R.J.F. DRAWN BY R.J.F. CHECKED BY W.J.McK.

CITY OF RIVERSIDE CALIFORNIA
DEPARTMENT OF PUBLIC WORKS

APPROVED BY	BY	DATE
PRINCIPAL ENGINEER		
PARK DEPARTMENT		4/27/81
TRAFFIC DEPARTMENT		5/1/81
CHIEF R.W. ENGINEER		3-24-81

APPROVED BY William D. Gardner
DIRECTOR OF PUBLIC WORKS
MAY 6, 1981

STREET PLAN AND PROFILE
ZONING CASE NO. R-8-778
TRUJILLO WAY
KELLER AVE. TO 230' NORTH

HORIZ SCALE 1" = 40' VERT. SCALE 1" = 4'

INDEXED BLD
PROJ. NO. R-2361
SHEET 3 OF 3
FILE NO.

OR M. Gowan 3/2/81

PC-1049

P4-5