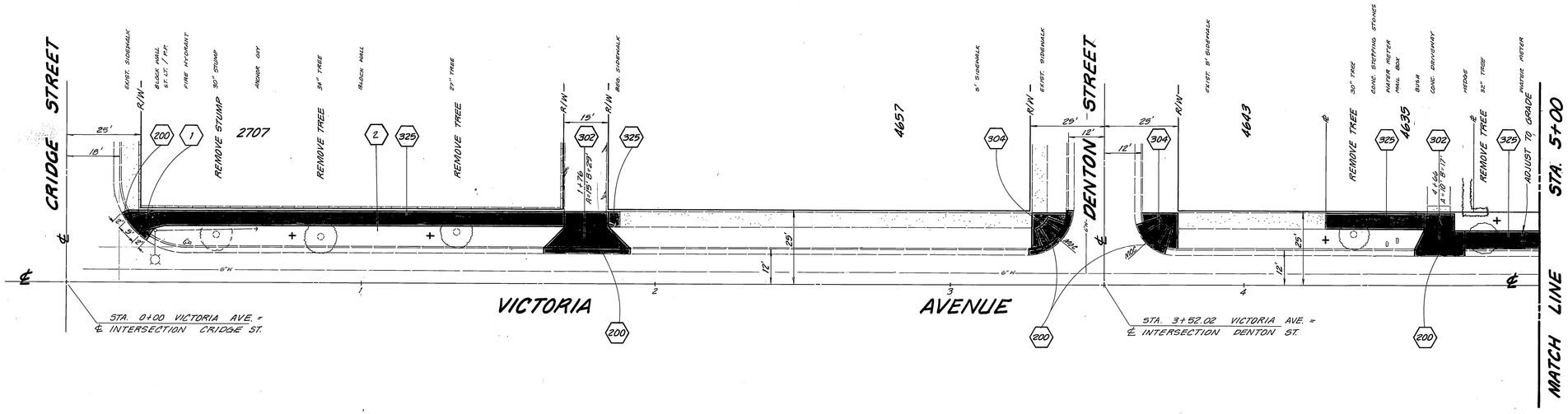

CONSTRUCTION NOTES:

- 200 -- CONSTRUCT CONC. CURB & GUTTER PER STD. DWG. NO. 200, 6" C.F.
- 302 -- CONSTRUCT CONC. DRIVEWAY APP. PER STD. DWG. NO. 302, A & B AS NOTED.
- 304 -- CONSTRUCT WHEELCHAIR RAMP PER STD. DWG. NO. 304.
- 325 -- CONSTRUCT CONC. SIDEWALK PER STD. DWG. NO. 325.
- 200 II -- CONSTRUCT CONC. CURB (TYPE II) ONLY. PER STD. DWG. NO. 200
- \+ -- INDICATES PLANTING LOCATION FOR MAGNOLIA GRANDIFLORA (MAGNOLIA TREE.) 15 GALLON SIZE.
- 1 -- CONST. MODIFIED WHEELCHAIR RAMP
- 2 -- GRADE PARKWAY

GENERAL NOTES:

1. ALL CONSTRUCTION SHALL BE IN ACCORDANCE WITH THE CITY OF RIVERSIDE STANDARD DRAWINGS, AND THE STANDARD SPECIFICATIONS FOR PUBLIC WORKS CONSTRUCTION, 1982 EDITION.

N

MARK	REVISIONS	APPR.	DATE

DESIGNED BY Karl Y DRAWN BY Bret I CHECKED BY

CITY OF RIVERSIDE
PUBLIC WORKS DEPARTMENT

APPROVED BY	DATE	BY
PRINCIPAL ENGINEER	[illegible]	10/5/82
PARK DEPARTMENT	[illegible]	2/25/82
TRAFFIC DIVISION	[illegible]	7-28-82
CHIEF P. W. ENGINEER	[illegible]	12.2

APPROVED BY Robert C. Wales
PUBLIC WORKS DIRECTOR
DATE 12/2/82

VICTORIA AVENUE SIDEWALKS

BETWEEN UNIVERSITY AVE. AND CRIDGE ST.

HORIZ. SCALE: 1" = 20'

INDEX WF
ACCOUNT NO. 15-550-580

R-2465

SHEET 1 OF 4

CRFB 1036/46-60, 64-68

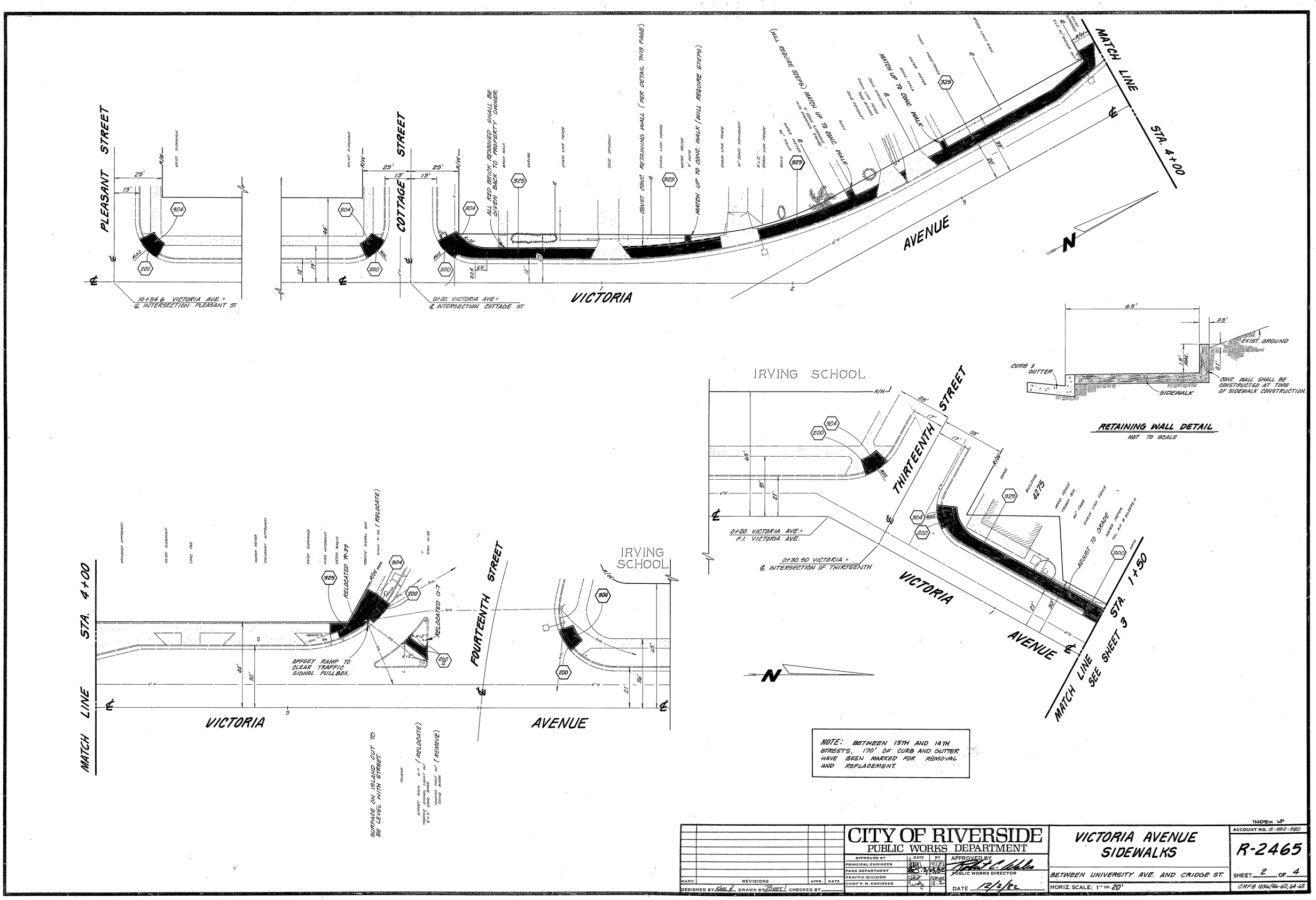

NOTE: BETWEEN 13TH AND 14TH STREETS, 170' OF CURB AND GUTTER HAVE BEEN MARKED FOR REMOVAL AND REPLACEMENT.

MARK	REVISIONS	APPR.	DATE

DESIGNED BY Karl J. DRAWN BY Brett CHECKED BY

CITY OF RIVERSIDE
PUBLIC WORKS DEPARTMENT

APPROVED BY	DATE	BY
PRINCIPAL ENGINEER		
PARK DEPARTMENT	10/5/82	
TRAFFIC DIVISION		
CHIEF P. W. ENGINEER	12.2	

APPROVED BY Robert C. Wales
PUBLIC WORKS DIRECTOR
DATE 12/2/82

VICTORIA AVENUE SIDEWALKS

BETWEEN UNIVERSITY AVE. AND CRIDGE ST.

HORIZ. SCALE: 1" = 20'

INDEX WF
ACCOUNT NO. 15-550-580
R-2465
SHEET 2 OF 4
CRFB 1036/46-60, 64-68

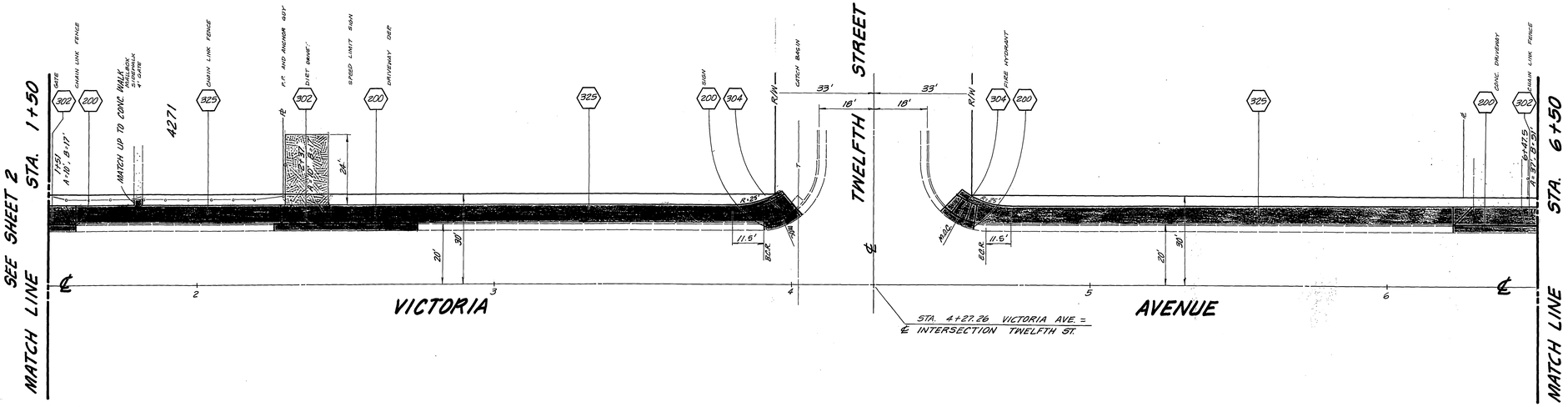

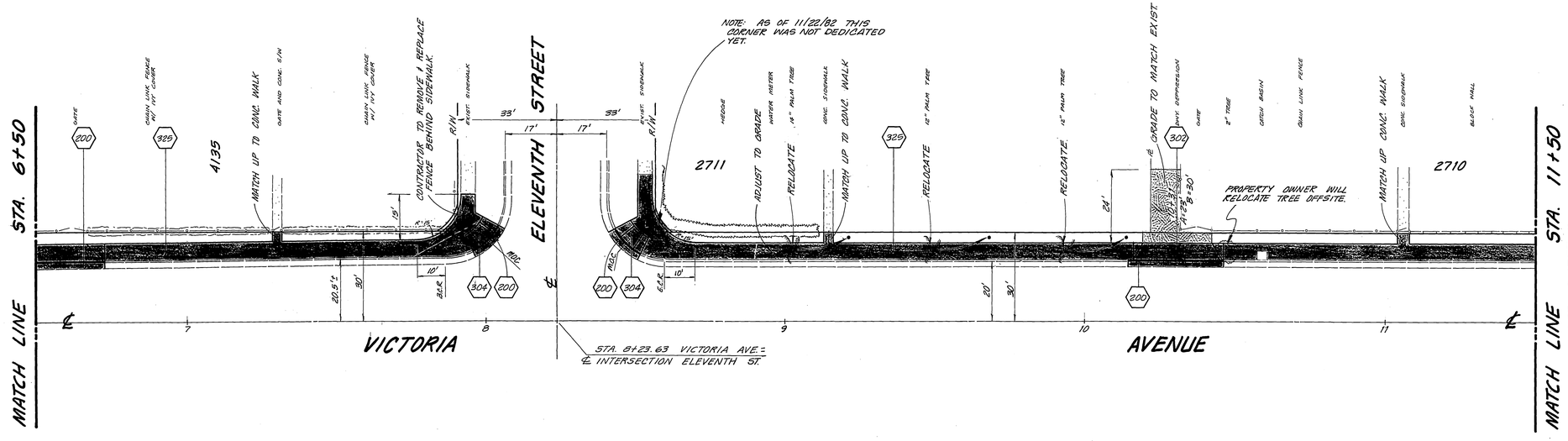

N

MARK	REVISIONS	APPR.	DATE

DESIGNED BY Karl J. DRAWN BY Robert L. CHECKED BY

CITY OF RIVERSIDE
PUBLIC WORKS DEPARTMENT

APPROVED BY	DATE	BY
PRINCIPAL ENGINEER		
PARK DEPARTMENT	8/25/82	
TRAFFIC DIVISION		
CHIEF P. W. ENGINEER	12.2	

APPROVED BY Robert C. Ashley
PUBLIC WORKS DIRECTOR
DATE 12/2/82

VICTORIA AVENUE SIDEWALKS

BETWEEN UNIVERSITY AVE. & CRIDGE ST.

HORIZ. SCALE: 1" = 20'

INDEX UF
ACCOUNT NO. 15-550-580

R-2465

SHEET 3 OF 4

CRFB 1036/46-60, 64-68

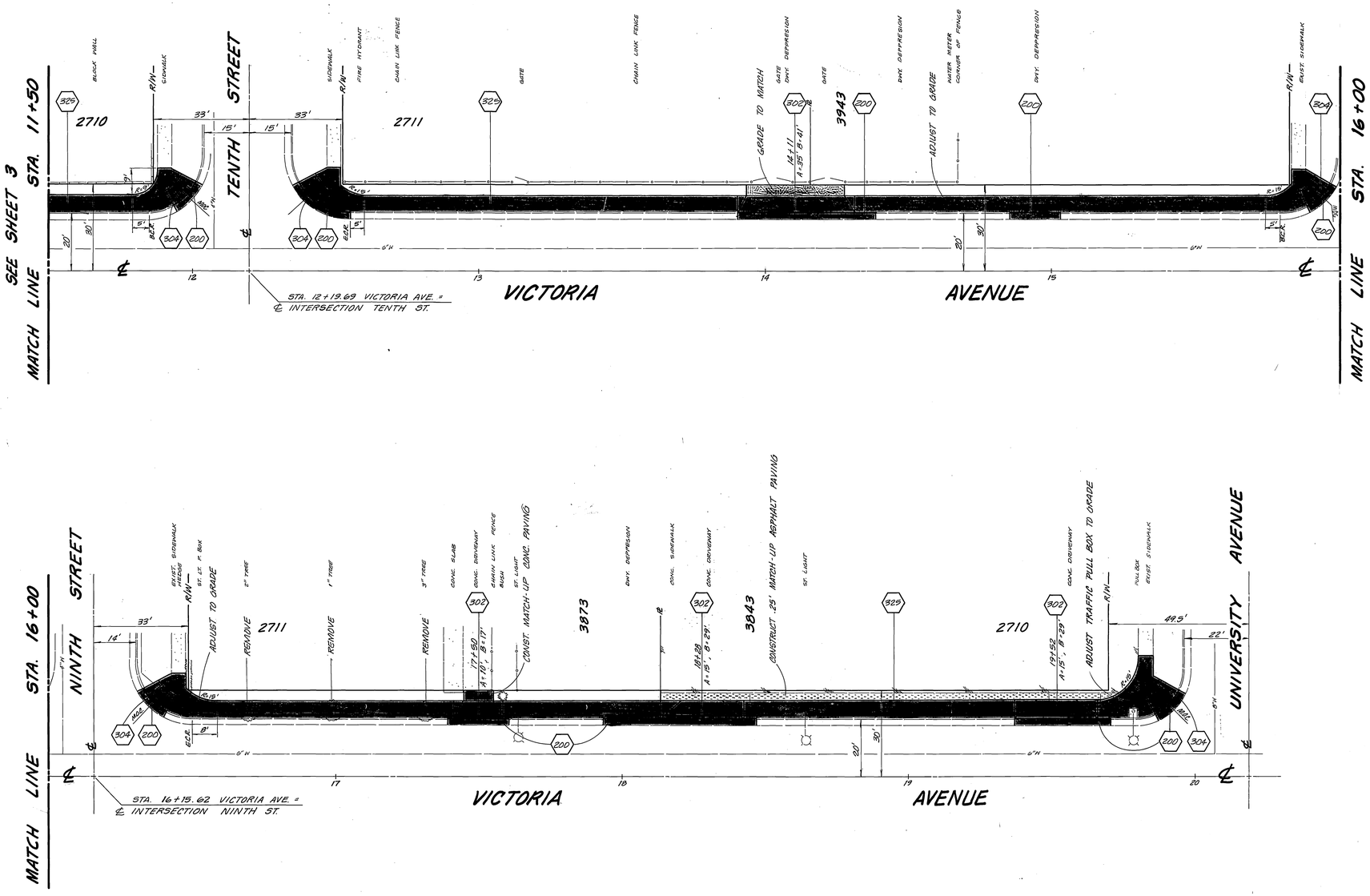

MARK	REVISIONS	APPR.	DATE

DESIGNED BY Karl P. DRAWN BY Brett I. CHECKED BY

CITY OF RIVERSIDE
PUBLIC WORKS DEPARTMENT

APPROVED BY	DATE	BY
PRINCIPAL ENGINEER		
PARK DEPARTMENT	8/25/82	
TRAFFIC DIVISION		
CHIEF P. W. ENGINEER	12.2	

APPROVED BY [signature]
PUBLIC WORKS DIRECTOR
DATE 12/2/82

VICTORIA AVENUE SIDEWALKS

BETWEEN UNIVERSITY AVE. AND CRIDGE ST.

HORIZ. SCALE: 1" = 20'

INDEX LF
ACCOUNT NO. 15-550-580

R-2465

SHEET 4 OF 4

CRFB 1036/46-60, 64-68