RIVERSIDE CALIFORNIA

CITY OF RIVERSIDE — INCORPORATED 1883

PUBLIC WORKS DEPARTMENT

DOWNTOWN STREET REHABILITATION 1985
PHASE II
THIRD STREET TO UNIVERSITY AVENUE
&
MARKET STREET TO RIVERSIDE FREEWAY (91)
ALSO INCLUDING
CHESTNUT STREET ~~STORM DRAIN~~ (13TH TO 10TH ST.)
OLIVEWOOD AVENUE (PROSPECT AVE. TO 14TH ST.)
SEVENTH STREET (PINE ST. TO REDWOOD DR.)
FAIRMOUNT BLVD. (7TH ST. TO 5TH ST.)
ORANGE ST. IMPROVEMENTS (BETWEEN 1ST & HIAWATHA, 3RD ST. TO 1ST ST. & 7TH ST. TO 5TH)

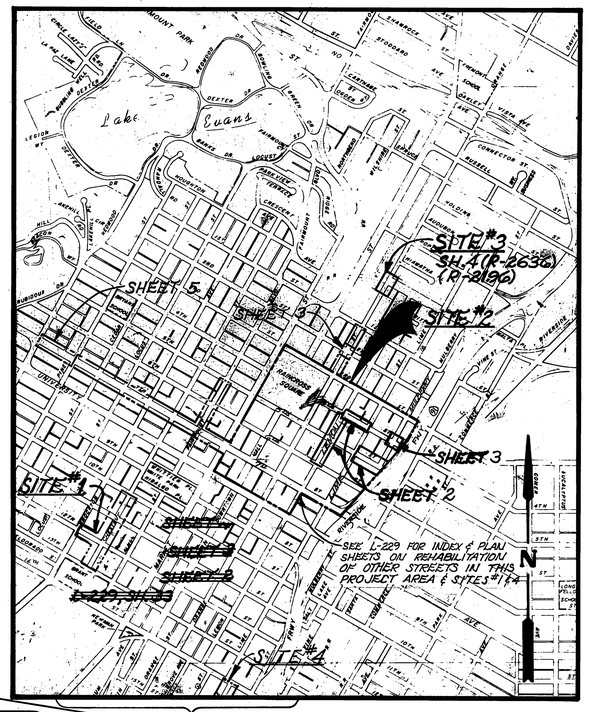

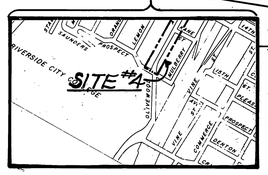

PROJECT LOCATION PLAN

0 KM. 0.5 KM. 1 KM. 1.5 KM.
0' 500' 1000' 2000' 3000' 4000' 5000' 6000'

SCALE 1" = 1000'

CONSTRUCTION LEGEND

CENTER LINE	——℄——	TOP OF SLOPE	
RIGHT-OF-WAY LINE	——R/W——	TOE OF SLOPE	
SUBDIVISION LOT LINE	——℄——	DIRECTION OF FLOW	——→

ADJ	ADJUST SEWER, SD, ELECTRICAL & WATER MH'S. & GATE VALVES TO GRADE. ADJUSTMENT TO GRADE OR RELOCATION OF GAS CO. & TEL. CO. FACILITIES WILL BE DONE BY OTHERS.
G1	GRIND EXIST. AC 0.0'(5' FROM GUTTER LIP) TO 0.05' BELOW GUTTER LIP (AT EDGE OF GUTTER) - TYPE I GRINDING.
G SG	GRIND EXIST. AC TO MACADAM BASE (TYPE II GRINDING) & REPLACE WITH 0.05' OF OPEN GRADED AC (OGAC) OVER 0.21' DENSE GRADED AC (DGAC).
OL VAC	0.05' MIN. OGAC OVER VARIABLE THICKNESS OF DGAC (0.00' TO 0.28') OVERLAY.
O RC	0.05' MIN. OGAC OVER ASPHALT RUBBER STRESS ABSORBING TREATMENT (ARSAT).
R S1	REMOVE & REPLACE EXIST. AC WITH 0.05' MIN. OGAC OVER 0.25 DGAC OVER 0.67' AGGREGATE BASE. (1ST ST. SD RESURFACING OPTION: 7" FULL DEPTH DGAC OVER NATIVE SOIL)
R S2	REMOVE & REPLACE EXIST. STRUC. SEC. WITH 0.05' MIN. OGAC OVER 0.25' DGAC OVER 0.5' CAB.
R S3	CONST. STRUCTURAL SECTION OF 0.05' MIN. OGAC OVER 0.45' DGAC OVER NATIVE SOIL.

SPECIFIC CONSTRUCTION NOTES

⬢ NUMBERS ABOVE 100 IN A HEXAGON ON THE PLAN REFER TO THE RESPECTIVE STANDARD DRAWING AND SHALL BE CONSTRUCTED ACCORDINGLY, UNLESS MODIFICATIONS ARE NOTED ON THE PLAN OR COVER SHEET BELOW. ANY NUMBER SHOWN BELOW THE STANDARD DRAWING NUMBER INDICATES THE SPECIFIC ALTERNATE TO BE CONSTRUCTED.

⬡

GENERAL CONSTRUCTION NOTES

1. ALL ELEVS. SHOWN ON THE PLAN SHALL BE STAKED IN THE FIELD.
2. EXIST. UTILITIES SHOWN ON THE PLAN ARE PLOTTED FROM UTILITY RECORDS. THE CONTRACTOR IS REQUIRED TO TAKE DUE PRECAUTIONARY MEASURES TO LOCATE & PROTECT ALL UTILITIES WHETHER OR NOT SHOWN ON THE PLAN. (i.e GAS SVCS.). THE COVER OF A UTILITY IS SHOWN IN THE PROFILE. UTILITIES SHOWN IN THE PROFILE AS "I" INDICATES THAT COVER IS UNKNOWN; HOWEVER, THE UTILITY IS NOT EXPECTED TO CONFLICT WITH THE PROPOSED IMPROVEMENTS.
3. WHERE ASPHALT RUBBER STRESS ABSORBING TREATMENT IS APPLIED, CRACKS SHALL BE FILLED WITH A BITUMINOUS MATERIAL WHERE INDICATED BY THE INSPECTOR.
4. PROTECT EXISTING LANDSCAPING AND SPRINKLER SYSTEMS.
5. STANDARD DRAWINGS NO. 1 AND NO. 3 HAVE BEEN MODIFIED AND SUPPLEMENTED BY THE TOPO AND SHADING LEGENDS NOTED HEREON.
6. GRINDING (TYPES I & II) ARE DEFINED IN THE SPECIFICATIONS.
7. CONTRACTOR SHALL EXPOSE ALL CROSSING SEWER LATERALS & UNDERGROUND UTILITIES PRIOR TO ISSUING GRADE SHEETS. ALL SEWER LATS. THAT ARE NOT ABANDONED SHALL BE PROTECTED IN PLACE WITH A CONC. ENCASEMENT PER STD. DWG. 664 WHERE THEY CROSS THE PROPOSED STORM DRAINS.

EXISTING UNDERGROUND & TOPOGRAPHY LEGEND

EXISTING UNDERGROUND UTILITIES:

SANITARY SEWER	——8" S——	TELEPHONE CONDUIT	——T——T——
WATER LINE	——6" W——	ELECTRICAL CONDUIT	——E——E——
STORM DRAIN	——24" S.D.——	ELECTROLIER LIGHTING CONDUIT	——ELC——
GAS LINE	——3" G——	TRAFFIC SIGNAL	——SIG——SIG——
IRRIGATION LINE	——20" IRR.——	FIRE ALARM	——F——F——
ABANDONED UTILITY	———6" G(ABAN'D).———		

EXISTING TOPOGRAPHY:

BLOCK WALL		TOP OF SLOPE	
BOARD FENCE		TOE OF SLOPE	
WIRE FENCE		DIRECTION OF FLOW	
CHAIN LINK FENCE			

SANITARY SEWER M.H.	POLE & GUY ANCHOR	PEDESTRIAN PUSH BUTTON	
SANITARY SEWER CLEANOUT	ELECTRIC POLE	RAILROAD TRACKS	
STORM DRAIN M.H.	TELEPHONE POLE	RAILROAD SIGN	
IRRIGATION WEIR	JOINT USE POLE	RAILROAD SIGNAL	
WATER M.H.	PULL BOX	STREET LIGHT & TRAFFIC SIGNAL ON MAST ARM	
GAS M.H.	TRAFFIC SIGN	STREET LIGHT (UPRIGHT)	
ELECTRIC M.H.	PARKING METER	STREET LIGHT	
TELEPHONE M.H. OR VAULT	FIRE ALARM BOX	TRAFFIC SIGNAL	
WATER METER	STREET NAME SIGN	TRAFFIC SIGNAL ON MAST ARM	
FIRE HYDRANT	GAS METER	TRAFFIC SIGNAL CONTROLLER	
SPRINKLER HEAD	MAIL BOX	TRAFFIC SIGNAL PRESSURE DETECTOR	
VALVE	FAUCET	TRAFFIC SIGNAL LOOP DETECTOR	
AIR VALVE	TELEPHONE RISER		
AIR VENT	WHEEL STOP		
	A.C. BERM		
	STEEL POST		
	WOOD POST		

CONCRETE		CITRUS TREE
ASPHALT	OR	DECIDUOUS TREE
EDGE OF PAVEMENT	OR	PALM TREE
BUILDING	OR	SHRUBBERY
UNDERGROUND STRUCTURE		TREE STUMP
OVERHANGING STRUCTURE		EVERGREEN TREE

AS BUILT 12/1/86 RM

Underground Service Alert
CALL BEFORE YOU DIG
Call: TOLL FREE
1-800 422-4133
TWO WORKING DAYS BEFORE YOU DIG

INDEXED KB.

CITY OF RIVERSIDE
PUBLIC WORKS DEPARTMENT

	BY	DATE
APPROVED BY		
PRINCIPAL ENGINEER	[illegible]	2/21/86
PARK DEPARTMENT	—	—
TRAFFIC DIVISION	[illegible]	2-21-86
CHIEF P.W. INSPECTOR	[illegible]	2/20/86
SURVEYOR	[illegible]	2/20/86

APPROVED BY: William D. Hardman
PUBLIC WORKS DIRECTOR
DATE 2-21-86

DOWNTOWN STREETS REHABILITATION - NE 1984 - 1985

ACCOUNT No. 30-5751-2286-09
DRAWING NUMBER R-2636
SHEET 1 OF 5

DESIGNED BY J.H. DRAWN BY [illegible] CHECKED BY RCM

Underground Service Alert
Call: TOLL FREE
1-800
422-4133
TWO WORKING DAYS BEFORE YOU DIG

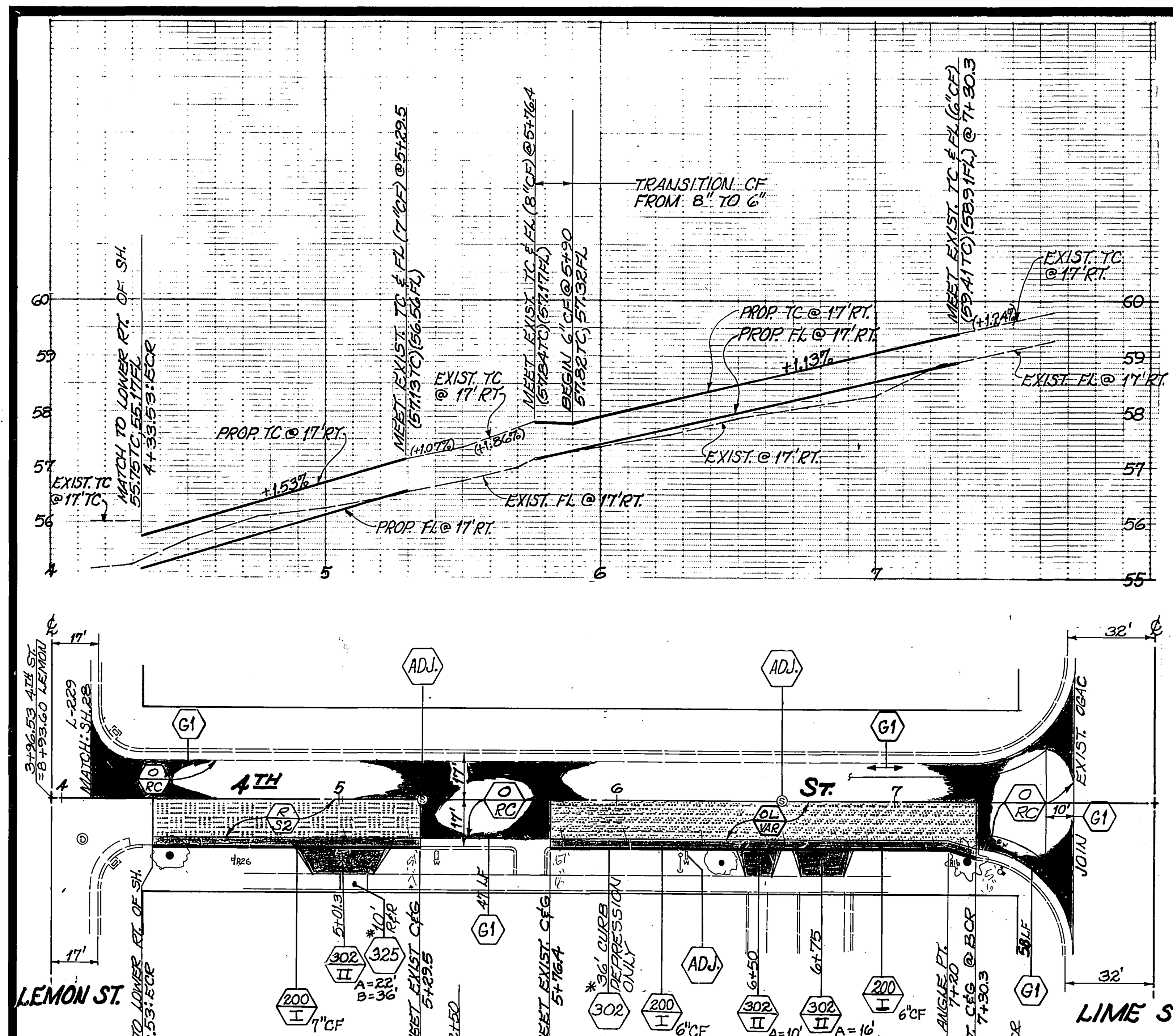

1	EXCAVATION (C.Y.)	61
2	BASE (C.Y.)	27
3	GRINDING TYPE I (L.F.)	569
4	REMOVE & REPLACE C&G (L.F.)	250
5	MORTAR CURB ONLY (L.F.)	—
6	CROSS GUTTER (S.F.)	—
7	SIDEWALK (S.F.)	*50
8	D/W APPR. (S.F.)	620
9	DENSE GRADED A.C. (TON)	53
10	RUBBERIZED A.C. (S.Y.)	1,000
11	OPEN GRADED A.C. (TON)	63
12	SLURRY SEAL (S.Y.)	—
13	ADJ. MH (EA.)	2
14	ADJ. WATER VALVE (EA.)	—
15	ADJ. ELEC. VAULT (EA.)	—

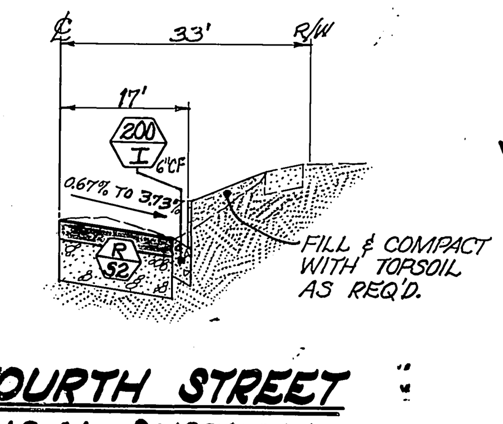

FOURTH STREET TYPICAL SECTION
STA. 4+33.53 TO 5+29.5
SCALE: HOR. 1"=20' VERT. 1"=2'

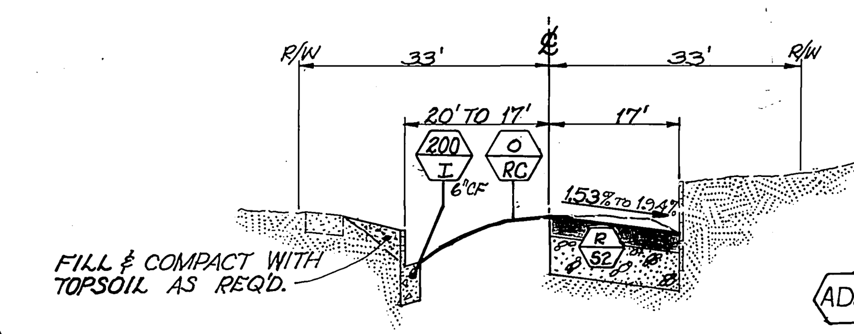

FIFTH STREET TYPICAL SECTION
STA. 0+67 TO 2+32
SCALE: HOR. 1"=20' VERT. 1"=2'

1	EXCAVATION (C.Y.)	193* ~~168~~
2	BASE (C.Y.)	79
3	GRINDING TYPE I (L.F.)	307
4	CONSTRUCT C&G (L.F.)	161.41* ~~165~~
5	MORTAR CURB ONLY (L.F.)	—
6	CROSS GUTTER (S.F.)	—
7	SIDEWALK (S.F.)	—
8	D/W APPR. (S.F.)	*555.68 ~~638~~
9	DENSE GRADED A.C. (TON)	*105 ~~88~~
10	RUBBERIZED A.C. (S.Y.)	1,499
11	OPEN GRADED A.C. (TON)	81
12	SLURRY SEAL (S.Y.)	—
13	ADJ. MH (EA.)	2
14	ADJ. WATER VALVE (EA.)	1
15	ADJ. ELEC. VAULT (EA.)	—

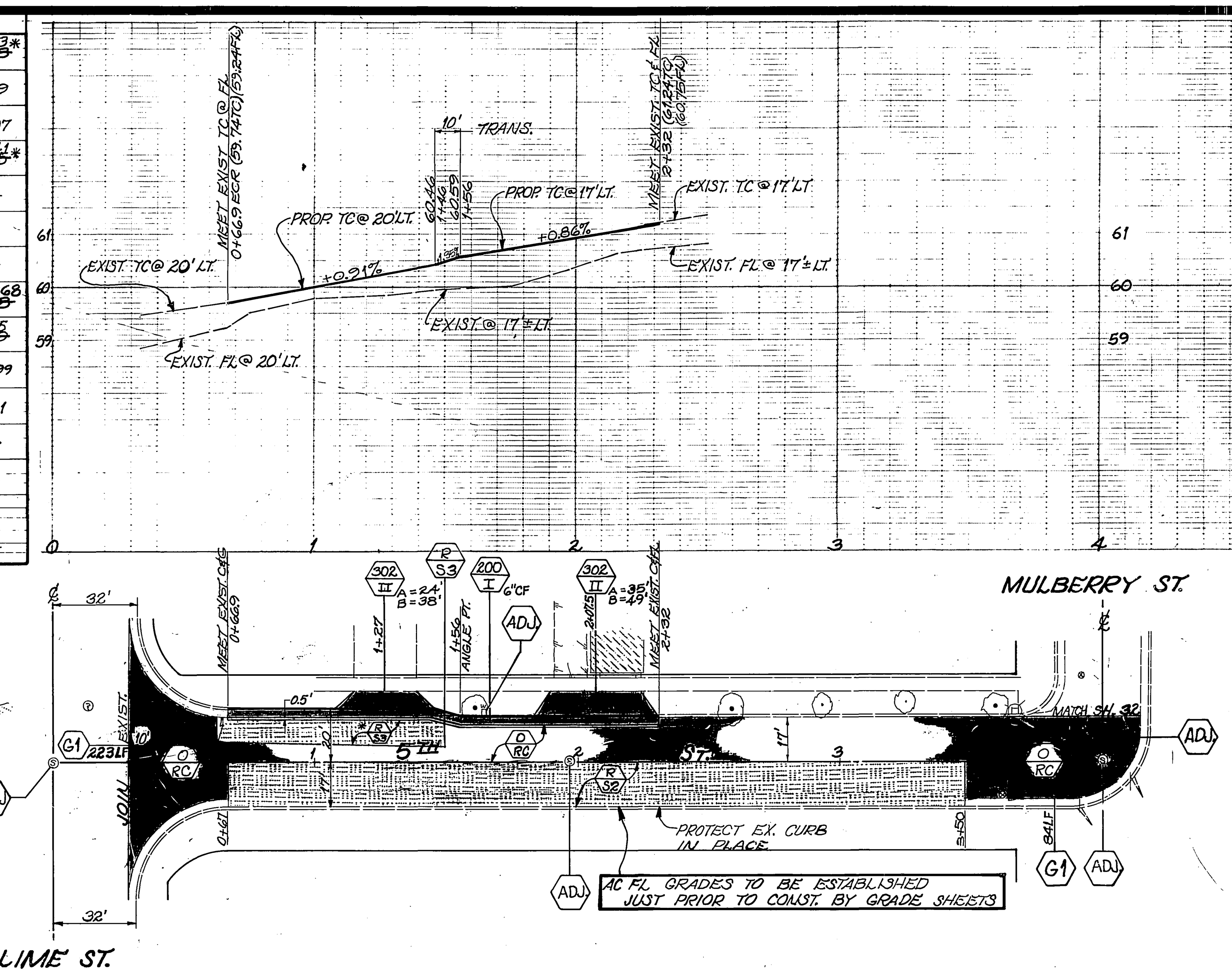

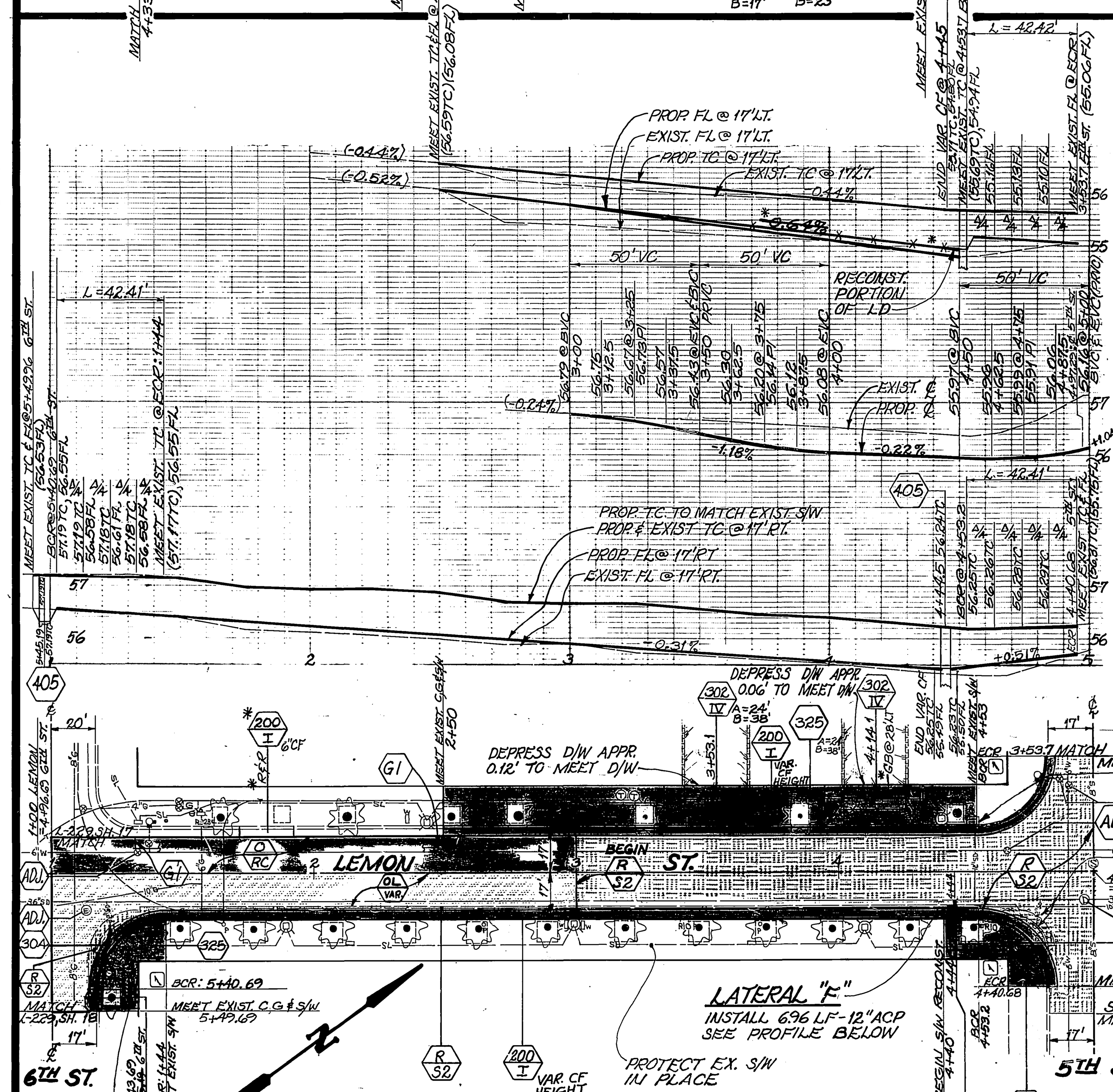

1	EXCAVATION (C.Y.)	281
2	BASE (C.Y.)	138
3	GRINDING TYPE I (L.F.)	120
4	REMOVE & REPLACE C&G (L.F.)	626
5	D/W APPR. (S.F.)	1,140
6	ADJ. MH (EA.)	2
7	SIDEWALK (S.F.)	2,958
8	12" ACP, D2000 (LF)	33
9	DENSE GRADED A.C. (TON)	140
10	RUBBERIZED A.C. (S.Y.)	746
11	OPEN GRADED A.C. (TON)	85
12	CATCH BASIN (STD. 405) (EA.)	2
13	WHEEL CHAIR RAMP (EA.)	2
14	ADJ. WATER VALVE (EA.)	4
15	LEVELING COURSE (TONS)	28
	MODIFY EX. CB	1

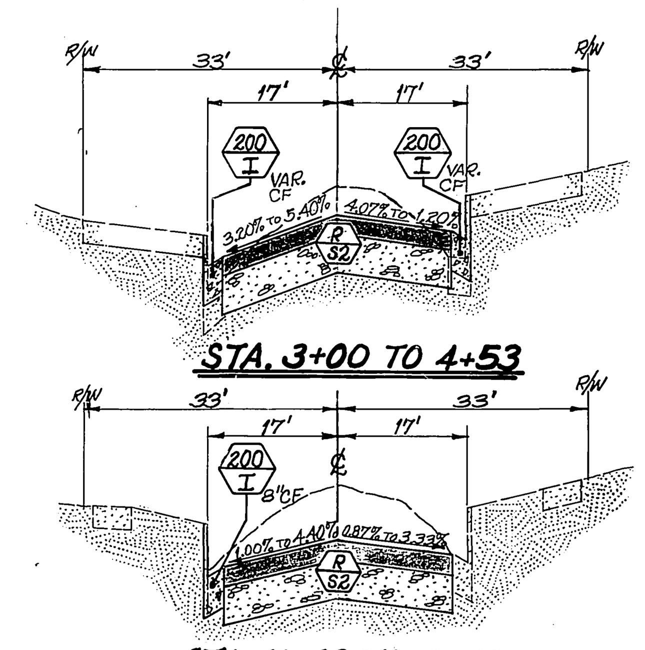

STA. 3+00 TO 4+53

STA. 5+42 TO 8+49

LEMON STREET TYPICAL SECTIONS
SCALE: HOR. 1"=20' VERT. 1"=2'

1	EXCAVATION (C.Y.)	708
2	BASE (C.Y.)	264
3	GRINDING TYPE I (L.F.)	—
4	REMOVE & REPLACE C&G (L.F.)	456
5	MORTAR CURB ONLY (L.F.)	—
6	CROSS GUTTER (S.F.)	—
7	SIDEWALK (S.F.)	1,285
8		—
9	DENSE GRADED A.C. (TON)	267
10	WHEEL CHAIR RAMP (EA.)	4
11	OPEN GRADED A.C. (TON)	85
12	12" ACP, D2000 (L.F.)	30
13	ADJ. MH (EA.)	2
14	ADJ. WATER VALVE (EA.)	5
15	CATCH BASIN (STD. 405)	2

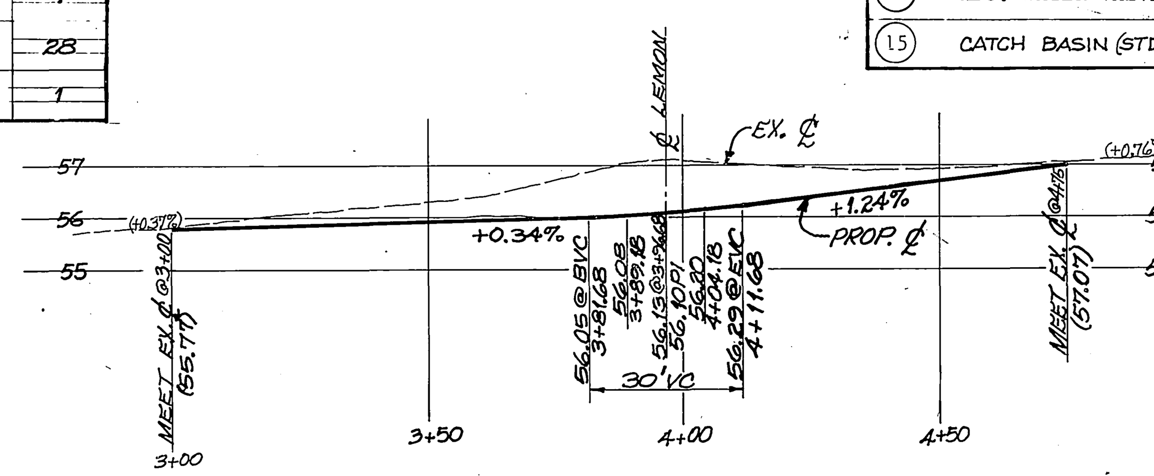

℄ PROFILE OF 5TH ST. @ LEMON ST.
SCALE: HOR. 1" = 30' VERT. 1" = 3'

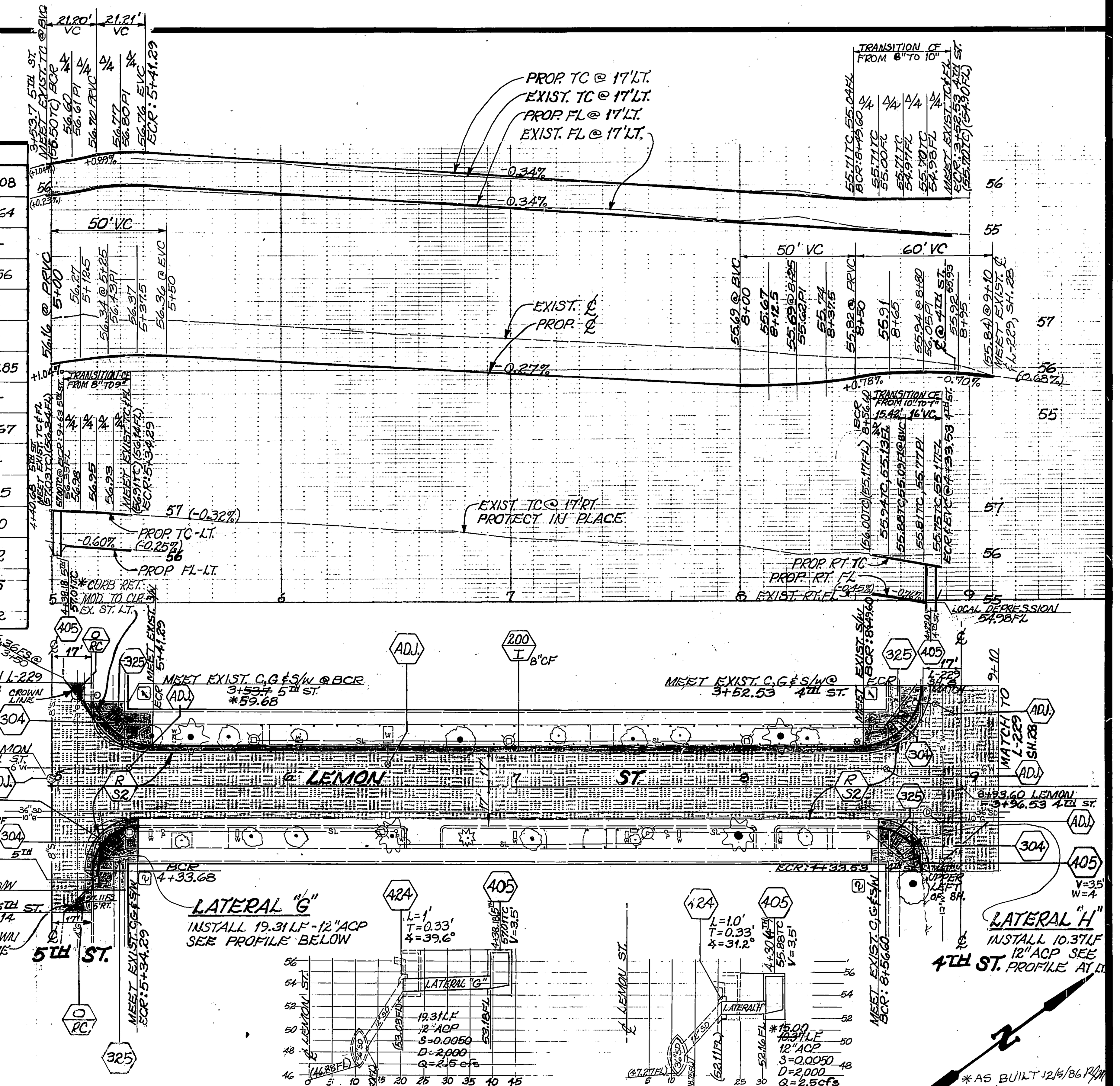

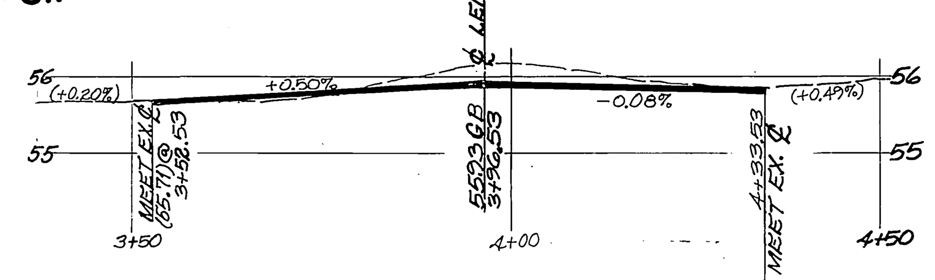

℄ PROFILE OF 4TH ST. @ LEMON ST.
SCALE: HOR. 1"=20' VERT. 1"=2'

CURVE DATA

INDEX	R	Δ	T	L
1	27'	90°	27'	42.41'
2	20'	90°	20'	31.42'

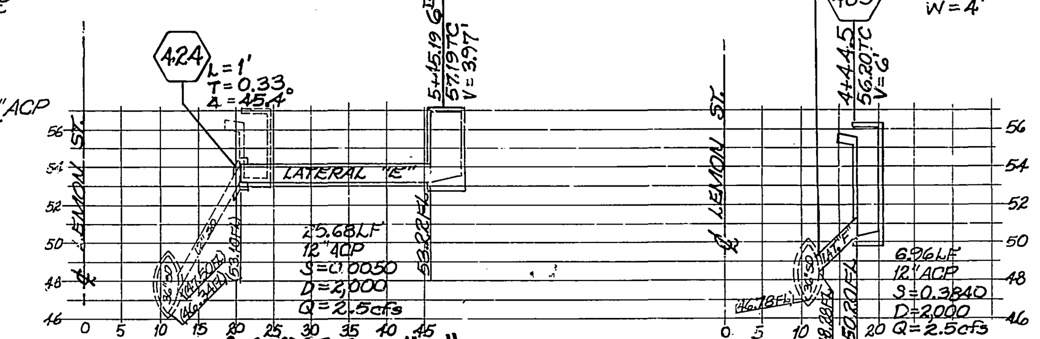

STORM DRAIN LATERAL PROFILES
SCALE: HOR. 1"=20' VERT. 1"=8'

*AS BUILT 12/5/86
INDEXED K.B.

MARK	REVISIONS	APPR.	DATE

DESIGNED BY J.H. DRAWN BY RM CHECKED BY RCM

CITY OF RIVERSIDE
PUBLIC WORKS DEPARTMENT

APPROVED BY	DATE	BY
PRINCIPAL ENGINEER		2/21/86
PARK DEPARTMENT		
TRAFFIC DIVISION	2-21-86	
CHIEF P. W. INSPECTOR		
SURVEYOR		2/20/86

APPROVED BY William D. Gardner
PUBLIC WORKS DIRECTOR
DATE 2-21-86

DOWNTOWN STREETS REHABILITATION - 1985
FOURTH ST. (LEMON TO LIME)
FIFTH ST. (LIME TO MULBERRY)
LEMON ST. (SIXTH TO FOURTH)

HORIZ. SCALE: 1" = 40' VERT. SCALE: 1" = 2'

ACCOUNT NO. 30-575-288-09
R-2636
SHEET 2 OF 5

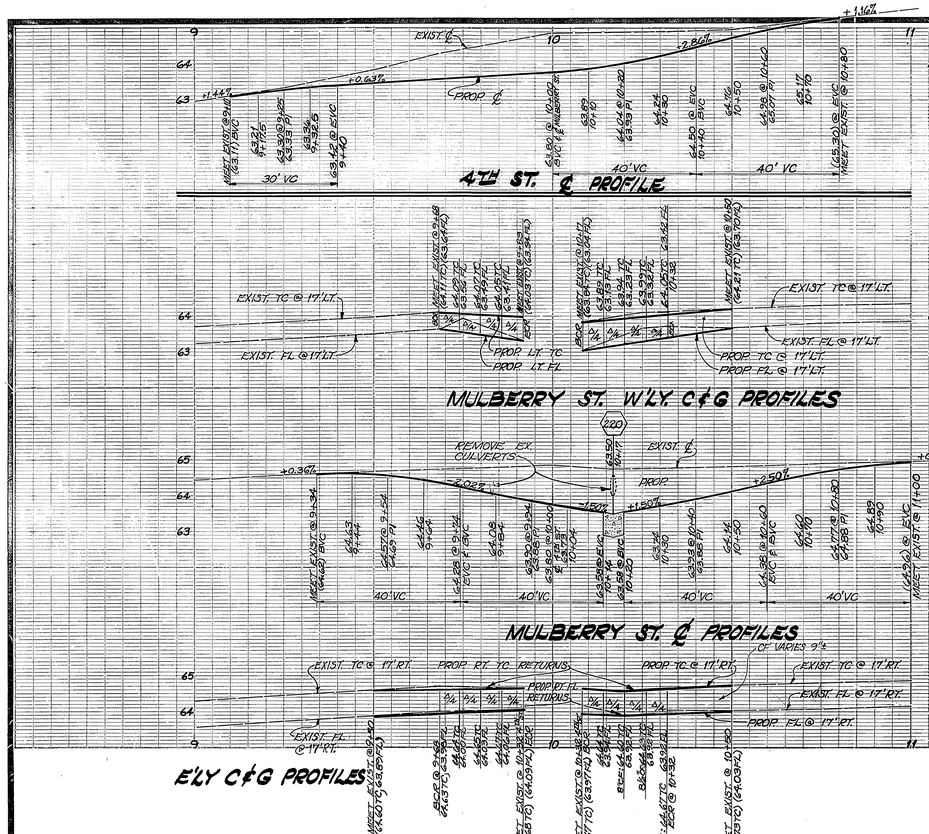

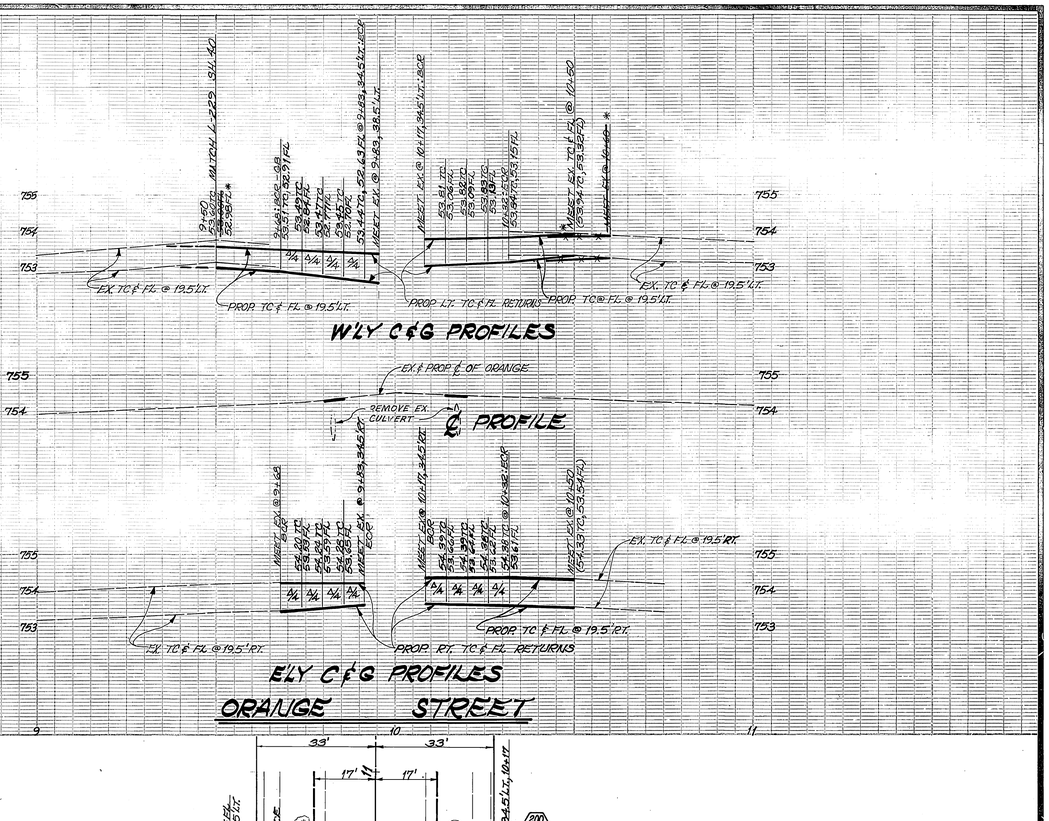

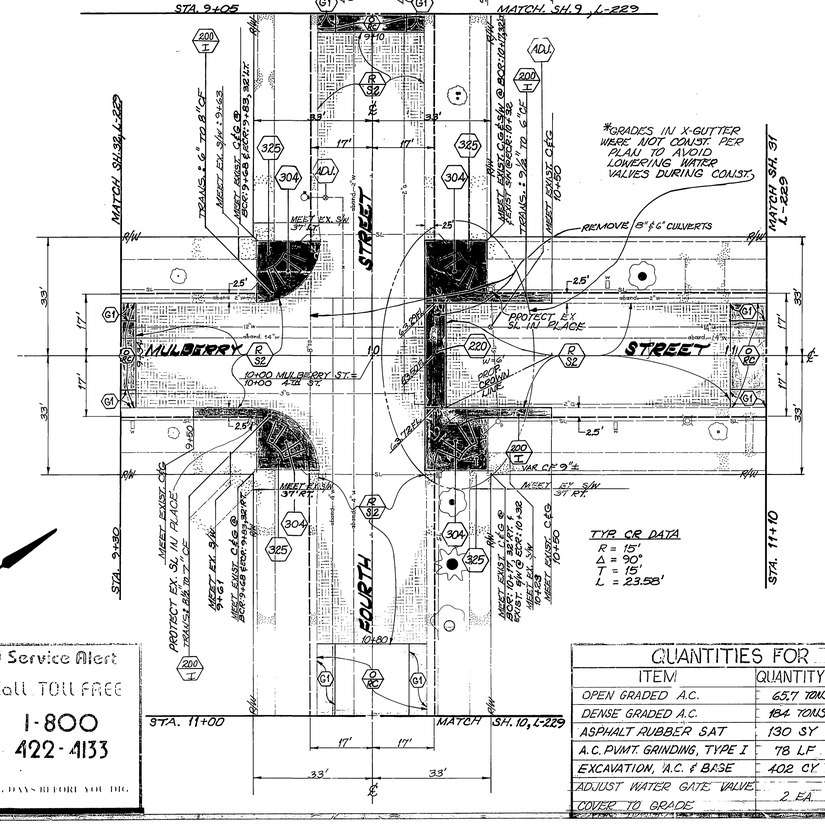

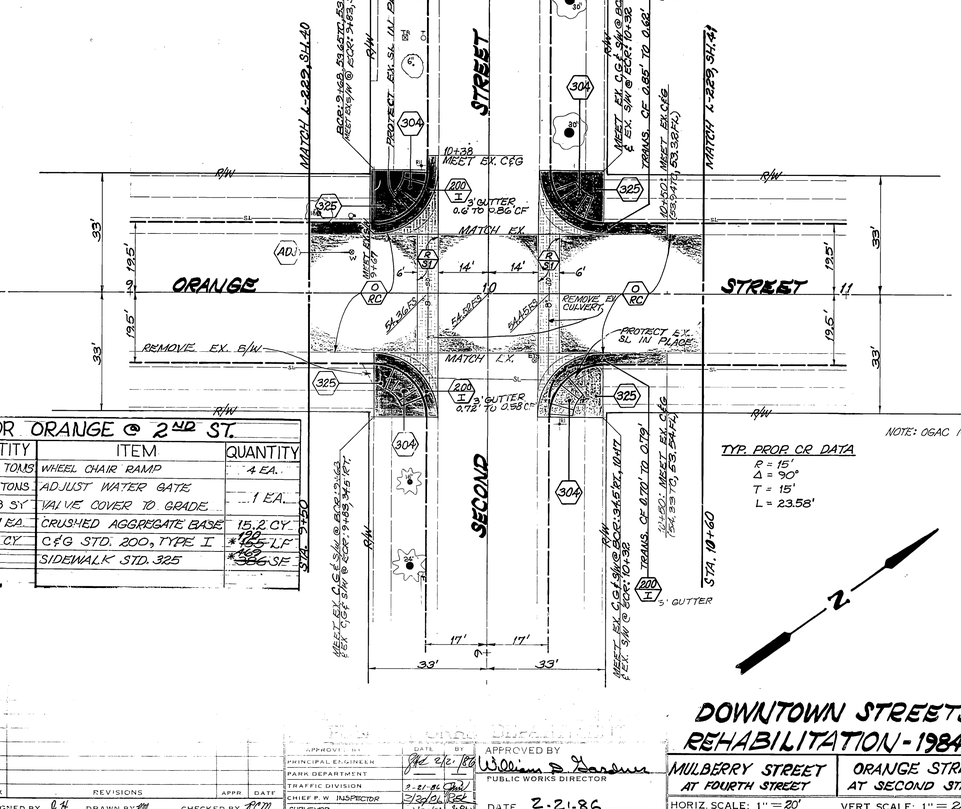

QUANTITIES FOR ORANGE @ 2ND ST.			
ITEM	QUANTITY	ITEM	QUANTITY
OPEN GRADED A.C.	23.1 TONS	WHEEL CHAIR RAMP	4 EA.
DENSE GRADED A.C.	11.5 TONS	ADJUST WATER GATE	1 EA.
ASPHALT RUBBER SAT	359.3 SY	VALVE COVER TO GRADE	1 EA.
BLUE FIRE HYDRANT MARKER	1 EA.	CRUSHED AGGREGATE BASE	15.2 CY
EXCAVATION, A.C. & BASE	21 CY	C&G STD. 200, TYPE I	*~~129~~ 125 LF
		SIDEWALK STD. 325	*~~356~~ SF

QUANTITIES FOR MULBERRY @ 4TH ST.			
ITEM	QUANTITY	ITEM	QUANTITY
OPEN GRADED A.C.	65.7 TONS	C&G STD. 200, TYPE I	~~149~~ 148 LF
DENSE GRADED A.C.	18.1 TONS	WHEEL CHAIR RAMP	4 EA.
ASPHALT RUBBER SAT	130 SY	SIDEWALK STD. 325	454 *~~434~~ SF
A.C. PVMT. GRINDING, TYPE I	78 LF	CRUSHED AGGREGATE BASE	18.2 CY
EXCAVATION, A.C. & BASE	40.2 CY	CROSS GUTTER STD. 220	29.8 SF
ADJUST WATER GATE VALVE	2 EA.	BLUE FIRE HYDRANT MARKER	2 EA.
COVER TO GRADE			

Underground Service Alert
Call TOLL FREE
1-800
422-4133
TWO WORKING DAYS BEFORE YOU DIG.

MARK	REVISIONS	APPR	DATE

DESIGNED BY JH DRAWN BY RM CHECKED BY RCM

APPROVED BY		DATE
PRINCIPAL ENGINEER	JHC 2/2/86	
PARK DEPARTMENT		
TRAFFIC DIVISION	2-21-86	
CHIEF P. W. INSPECTOR	2/24/86	
SURVEYOR	1/30/86	

APPROVED BY
William D. Landrum
PUBLIC WORKS DIRECTOR
DATE 2-21-86

*AS BUILT 12/6/86 RM
INDEX KB
30-576-288-09

DOWNTOWN STREETS REHABILITATION - 1984/85

R-2636

MULBERRY STREET AT FOURTH STREET
ORANGE STREET AT SECOND STREET

SHEET 3 OF 5

HORIZ. SCALE: 1" = 20'
VERT. SCALE: 1" = 2'

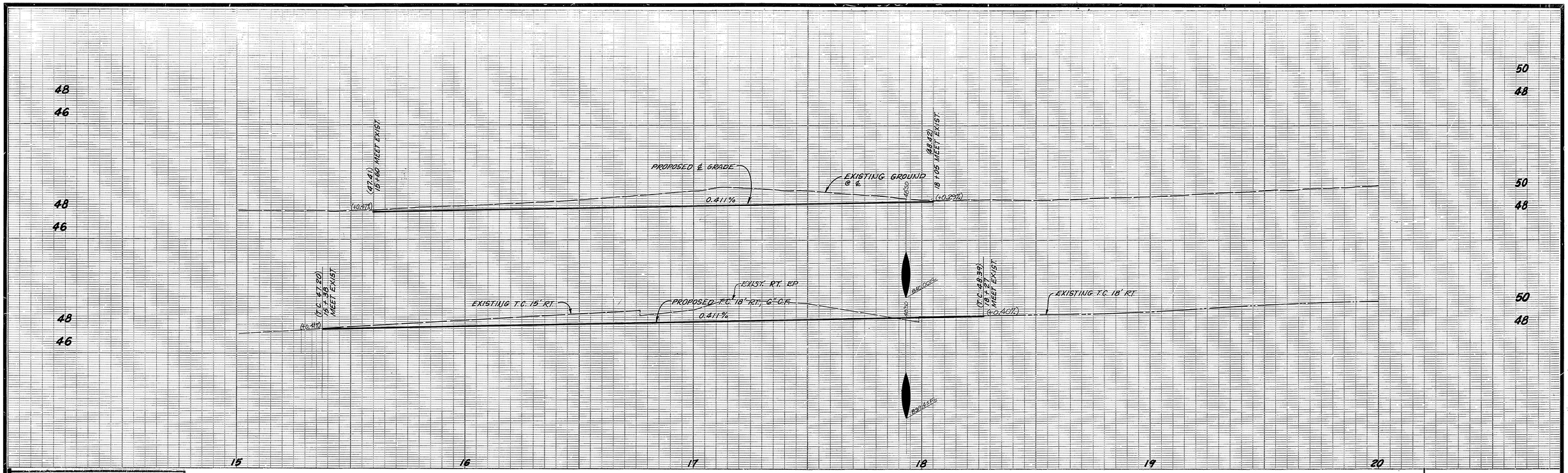

Underground Service Alert

Call: TOLL FREE

1-800 422-4133

TWO WORKING DAYS BEFORE YOU DIG.

NOTE: ~~WORK TO BE DONE PRIOR TO OVERLAYING OF ORANGE ST~~

BENCH MARK
PRECISE B.M. I7-F
ELEV: 833.211

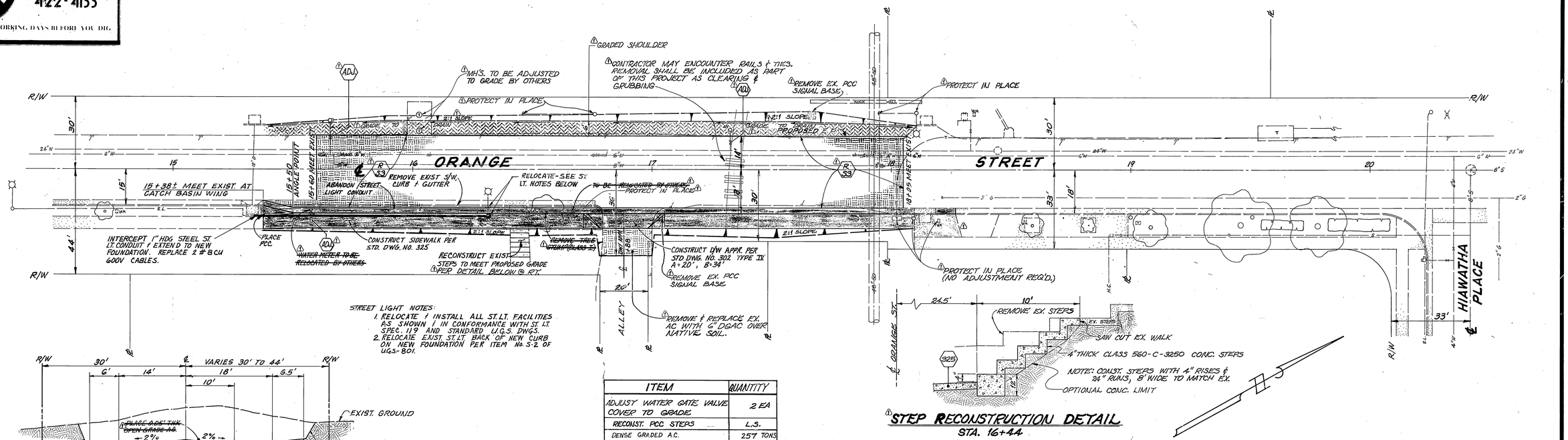

STREET LIGHT NOTES:

1. RELOCATE & INSTALL ALL ST. LT. FACILITIES AS SHOWN & IN CONFORMANCE WITH ST. LT. SPEC. 119 AND STANDARD U.G.S. DWGS.
2. RELOCATE EXIST. ST. LT. BACK OF NEW CURB ON NEW FOUNDATION PER ITEM No. S-2 OF U.G.S.-801.

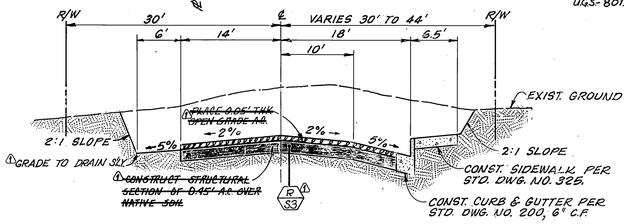

TYPICAL SECTION
NOT TO SCALE
T.I. = 6.0

ITEM	QUANTITY
ADJUST WATER GATE VALVE COVER TO GRADE	2 EA
RECONST. PCC STEPS	L.S.
DENSE GRADED A.C.	257 TONS
CURB & GUTTER	~~293~~ 303 C.F.
SIDEWALK	~~1,614~~ 1,615 S.F.
CURB & GUTTER REMOVAL	204 L.F.
S/W REMOVAL	710 S.F.
RELOCATE ST. LT.	1 EA.
EXCAVATION	466 C.Y.
D/W APPR. (PCC)	~~283~~ 287 S.F.
OPEN GRADED AC	53 TONS

⊕ INCLUDED IN CLEARING & GRUBBING

STEP RECONSTRUCTION DETAIL
STA. 16+44
NOT TO SCALE

MARK	REVISIONS	APPR.
1	REFLECTS PRESENT CONDITIONS & ADDS THIS DWG. TO R-2236	

DESIGNED BY RC DRAWN BY KET CHECKED BY

CITY OF RIVERSIDE
PUBLIC WORKS DEPARTMENT

APPROVED BY	
PRINCIPAL ENGINEER	
PARK DEPARTMENT	—
TRAFFIC DIVISION	—
CHIEF P. W. ENGINEER	

APPROVED BY: PUBLIC WORKS DIRECTOR
DATE 6/21/84

ORANGE STREET IMPROVEMENTS

BETWEEN FIRST STREET & HIAWATHA PLACE

HORIZ. SCALE: 1" = 20' VERT. SCALE: 1" = 4'

* AS BUILT 12/26/86 KM

INDEX MAP

ACCOUNT NO. 30-575-291-09
30-576-288-09

R-2196

FILE WITH R-2636

SHEET 1 OF 1

SHEET 4 OF 5 OF R-2636
(SHEET 3 OF 3 M-307)

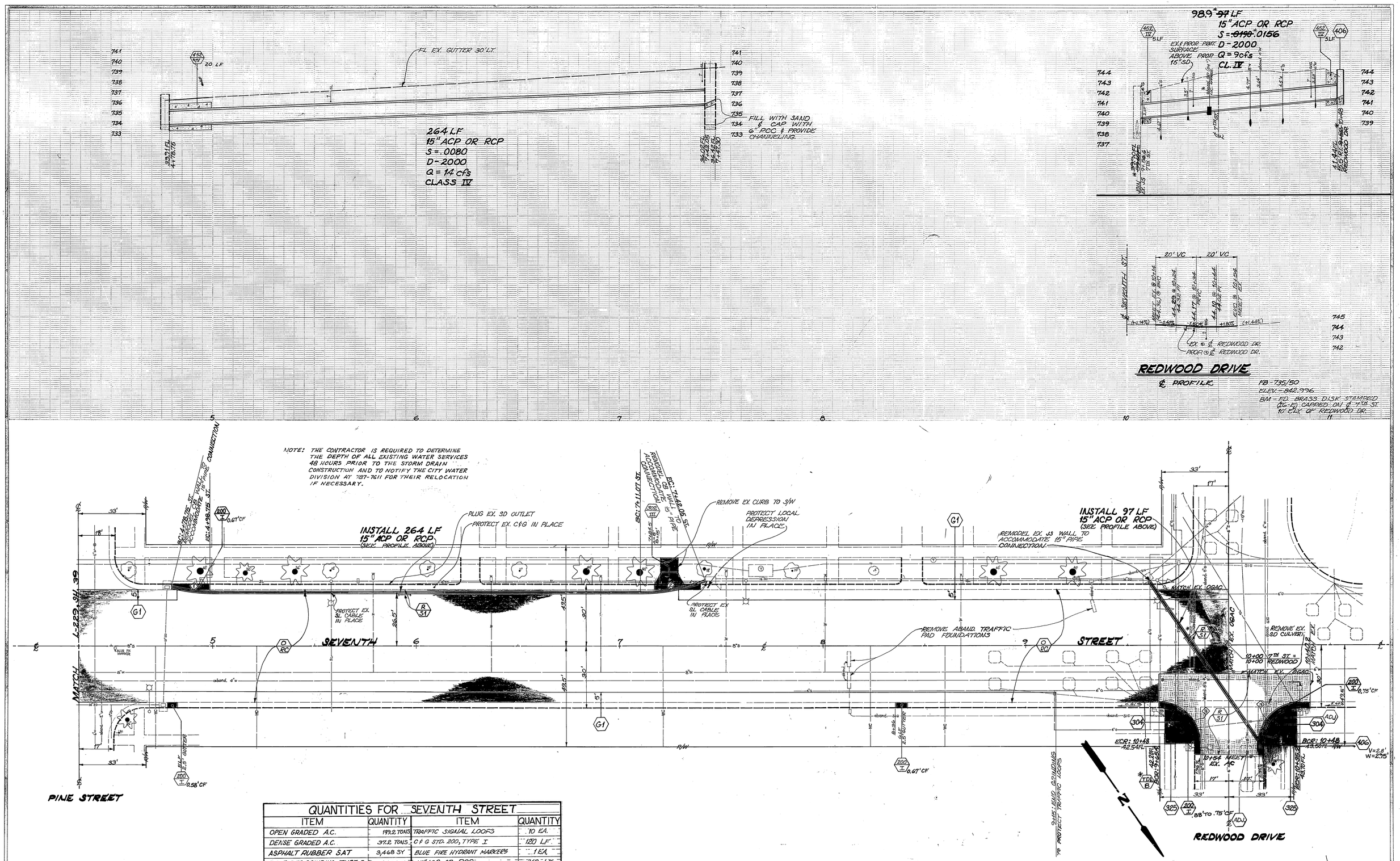

QUANTITIES FOR SEVENTH STREET			
ITEM	QUANTITY	ITEM	QUANTITY
OPEN GRADED A.C.	199.2 TONS	TRAFFIC SIGNAL LOOPS	10 EA.
DENSE GRADED A.C.	37.2 TONS	C & G STD. 200, TYPE I	120 LF.
ASPHALT RUBBER SAT	3,468 SY	BLUE FIRE HYDRANT MARKERS	1 EA.
A.C. PVMT. GRINDING, TYPE I	847 LF.	15" ACP OR RCP	362 LF
EXCAVATION, A.C. & BASE	70 CY	CATCH BASIN STD. 406	1 EA.
O/W APPROACH PER STD. 302 III	*137 SF	WHEEL CHAIR RAMP STD. 304	2 EA.
ADJUST SWR & S.D. M.H. FRAME & COVER TO GRADE	0	SIDEWALK STD. 325	*363 SF
		CRUSHED AGGREGATE BASE	49.3 CY
ADJUST WATER GATE VALVE COVER TO GRADE	0	PCC ENCASEMENT	*30 LF

CURVE DATA				
INDEX	R	Δ	T	L
1 SD	90'	12°50'19"	10.13'	20.17'
2 SD	90'	20°08'03"	15.98'	31.63'
3 CR	18'	90°	18'	28.28'

MARK | REVISIONS | APPR. | DATE

DESIGNED BY JH DRAWN BY RM CHECKED BY RCM

CITY OF RIVERSIDE
PUBLIC WORKS DEPARTMENT

APPROVED BY	DATE	BY
PRINCIPAL ENGINEER		
PARK DEPARTMENT		
TRAFFIC DIVISION		
CHIEF P. W. INSPECTOR	2/20/86	
SURVEYOR	2/20/86	

APPROVED BY William D. Gardner
PUBLIC WORKS DIRECTOR
DATE 2-21-86

DOWNTOWN STREETS REHABILITATION - 1984/85
SEVENTH STREET
PINE STREET TO REDWOOD DRIVE

HORIZ. SCALE: 1" = 20' VERT. SCALE: 1" = 2'

* AS BUILT 12/2/86

INDEXED K.B.

ACCOUNT NO. 30-575-288-09

R-2636

SHEET 5 OF 5