GENERAL NOTES

1. It shall be the responsibility of the contractor to clear the right of way in accordance with the provisions of law as it affects each utility including irrigation lines and appurtenances and at no cost to the City.

2. Construction shall be in accordance with the City of Riverside Department of Public Works, Standard Drawings, and the Standard Specifications for Public Works Construction, 1985 Edition.

3. Trim edge of existing pavement where new pavement joins to a smooth, straight line. Construct match-up paving as shown on plan and overlay paving as dircted in the field to produce a smooth section. Private Engineer estimates overlay to be *30* tons.

4. Construct driveway approaches per Std. Dwg. 302. Exact size and location to be determined at the time of construction as approved by the Traffic Engineer.

5. Curb and gutter shall be staked with 3' offsets at 25' intervals.

6. The subdivider shall arrange for a soil test to be made by a soils engineer after the streets have been prepared to rough grade. Depth of base material and A.C. paving shall be determined by the City of Riverside design standards and test procedures.

7. All flagged elevations shall be staked in the field by the private engineer.

8. The private engineer signing these plans is responsible for assuring the accuracy and acceptability of the work hereon. In the event of discrepancies arising during construction, the private engineer shall be responsible for determining an acceptable solution and revising the plans for approval by the City.

9. In residential areas 6" x 6" or 6" diameter blockouts for mailboxes are required in curb sidewalk 10" to 14" from curb face at the property line between adjacent residences. For mailboxes for business, mobilehome parks or apartment houses, developer to check with the U.S.P.S. for the number and location of mailboxes.

10. The private engineer preparing these plans shall be responsible for preserving or re-establishing and referencing survey monuments destroyed, disturbed or buried as a result of construction shown hereon.

11. On all areas within public right of way where the fill is one (1) foot or greater, a letter will be required form the soils engineer, certifying the compaction of the fill below subgrade, prior to issuance of the Construction Permit/Cut Sheets.

12. All traffic signs shall be installed prior to opening the streets to traffic.

13. See "Street Lighting Plans" for quantity and location of required street lights.

14. All overhanging tree limbs that are less than 14' above the street grade shall be trimmed back.

15. The developer and/or contractor shall contact the Public Service Department (787-7251) to pick up any existing Std. 180 barricades that are being removed. The City's inspector will make the final determination on whether a barricade can be relocted.

16. The developer and/or contractor shall contact the Public Works Department 30 days prior to beginning construction to negotiate the cost of the City's protion of the work.

17. In order to coordinate the City's portion of the work, the developer and/or contractor shall give the City 60 days' notice in order that the developer's and City's work may be installed concurrently. The developer shall prepare and compact rough subgrade (± .1') and is responsible for the condition of the subgrade until accepted by the City and until the City's contractor starts working. The developer is also responsible for barricading during this time.

18. Notice to contractor. The existence and location of any underground utility pipes or structures shown on these plans were obtained by a search of the available records. To the best of our knowledge there are no existing utilities except as shown on these plans. The contractor is required to take precautionary measures to protect the utility lines shown and any other lines not of record or not shown on these plans.

19. Final striping for traffic control and/or pavement marking to be the responsibility of the developer.

20. Any traffic control striping obliterated and/or badly worn during construction shall be restored by the contractor within five days after notification from the City Inspectors.

21. The developer is responsible for providing access paving. Should the developer and/or contractor decide to install the access paving prior to the City commencing its paving work, the developer shall cooridnate his installation of access paving on with the City inspector. Final course of paving in access area to be paid for by developer prior to the City commencing its paving operation. Developer will also install type "L" markers (Std. 665) at 20' on centers on outgoing taper.

22. Contractor agrees that he shall assume sole and complete responsibility for job site conditions during the course of construction of this project, including safety of all persons and property; that this requirement shall apply continuously and not be limited to normal working hours; and that the contractor shall defend, indemnify and hold the owner and the engineer harmless from any and all liability, real or alleged, in connection with the performance of work on this project, excepting for liability arising from the sole neglignece of the owner or the engineer.

23. All-related work shall conform to the city of Riverside, Park and Recreation Department standards.

24. Contact the park projects inspector a minimum of 48 hours in advance at 787-7223 to schedule inspections. Inspections shall be required: A) When plant locations have been spotted in the field prior to digging plant pits, B) while digging plant pits and planting/relocating trees, C) after planting and all other indicated or specified work has been completed for start of maintenance, and D) at end of maintenance/field acceptance (developer will be released from maintenance only upon receipt of written notification from the city that the park and recreation department is assuming maintenance responsibilities).

25. See landscaping and sprinkler system plans for parkway on Indiana Avenue.

26. The developer shall maintain all plantings for a min. period of one year.

27. Street tree planting shall be as follows:

STREET NAME	BOTANICAL NAME/CONMMON NAME	SIZE	SPACING	NO.
INDIANA AVE. / PIERCE ST.	See reverse frontage plan no. A-1648 prepared by *ORTON ASSOC*			
MUSKET WAY	Prunus Cerasifera/Red leaf Plum (Krauter Vesuvius)	15 gal.	45'	4
MINUTEMAN DR.	Prunus Cerasifera / Red Leaf Plum (Krauter Vesuvius)	15 gal.	45'	45
GWINNETT DR.	Pyrus Calleryana / Bradford Pear 'Bradford'	15 gal.	45'	3

28. A public works department permit is required prior to commencement of tree relocation and/or removal work. For all trees within the ultimate pavement area, backfill of all joles is to be inspected by the City for property compaction.

29. Contractor is to give the City Water Division fifteen (15) working days written notice prior to start of construction and to allow City fifteen (15) days for completion of work. (787-7611)

TRACT NO. 19568

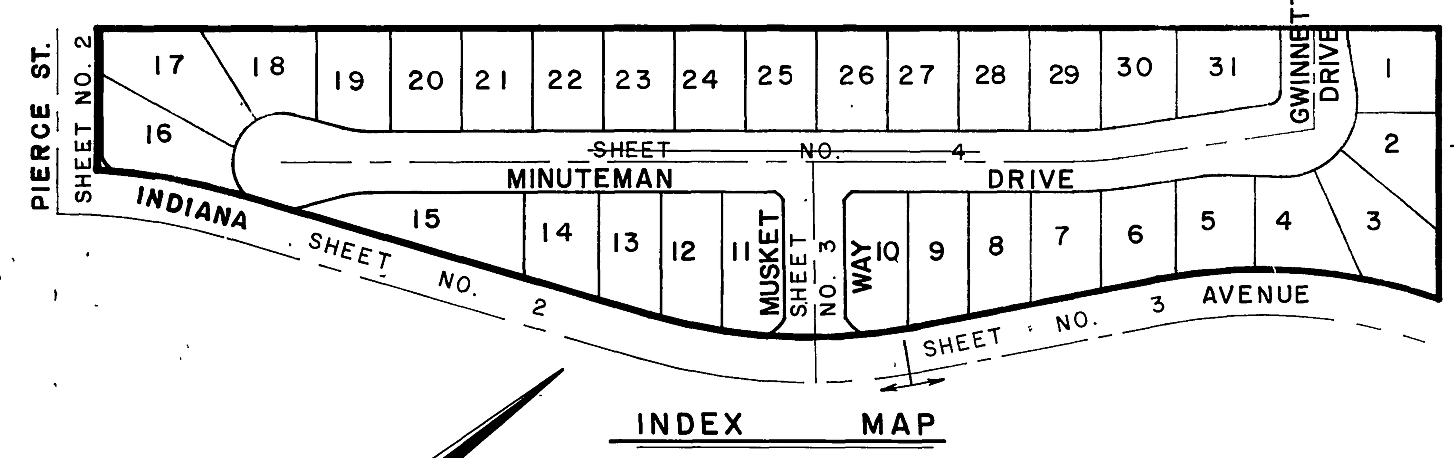

INDEX MAP

SCALE 1" = 150'

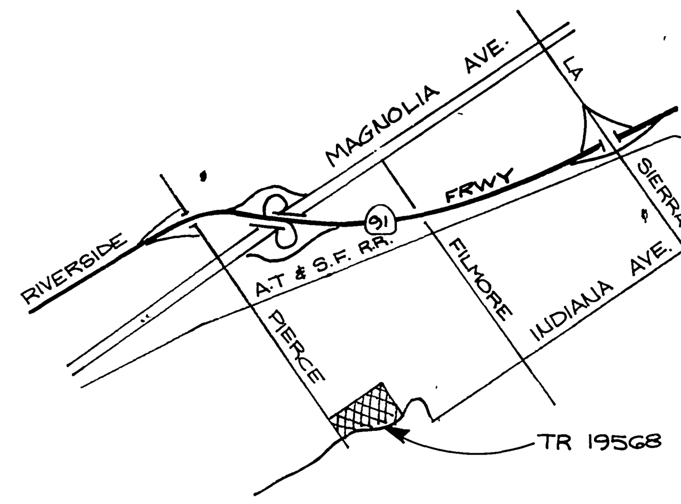

VICINITY MAP

NO SCALE

TRAFFIC SIGN SCHEDULE		
A	MUSKET WAY	3400
	INDIANA AVENUE	11700
B	MINUTEMAN DRIVE	11700
	MUSKET WAY	3400
C	MINUTEMAN DRIVE	11700
	GWINNETT DRIVE	3400
D	R-1 STOP SIGN 30" OCTAGON	
E	NOT A THROUGH STREET 24" X 24" (CONST. PER STD'S 662A & 666)	

CONSTRUCTION NOTES

1. Construct A.C. pavement over crushed aggregate base per typical section and per general note No. 6.
2. Construct curb and gutter per City of Riverside Std. Drwg. No. 200 (8" curb face).
3. Construct curb and gutter per City of Riverside Std. Drwg. No. 200. (6" curb face).
4. Construct P.C.C. cross gutter per City of Riverside Std. Drwg. No. 220.
5. Construct P.C.C. curb sidewalk per City of Riverside Std. Drwg. No. 325.
6. Construct wheelchair ramp per City of Riverside Std. Drwg. No. 304.
7. Construct curb outlet per City of Riverside Std. Drwg. No. 410.
8. Construct concrete block wall per section "A-A" Type/Color of Block Slumpstone/Tan Mortar Color Med Brown Other Size 6"×6"×16" Type/Color Cap Slumpstone/Dark Brn 8"×4"×16"
9. Construct 6" A.C. berm per City of Riverside Std. Drwg. No. 250. (Type I).
10. Construct 6' concrete block wall per City of Riverside Std Drwg 704 Type/Color of Block Slumpstone/Tan Mortar Color Med Brown Other Size 6"×6"×16" Type/Color Cap Slumpstone/Dk. Brown 8"×4"×16" THIS WALL REQUIRES A PERMIT AND INSPECTION FROM THE PUBLIC WORKS ENGR. DIV.
11. Construct C.S.P. inlet per City of Riverside Std. Drwg. No. 412.
12. Install 11" X 18" R.C.P. (CL 2000-D).
13. Construct 2' wide A.C. swale per detail this sheet.
14. Remove existing A.C. pavement.
15. Install under sidewalk drain per City of Riverside Std 411.
16. Install wrought iron fence per detail on sheet 2.

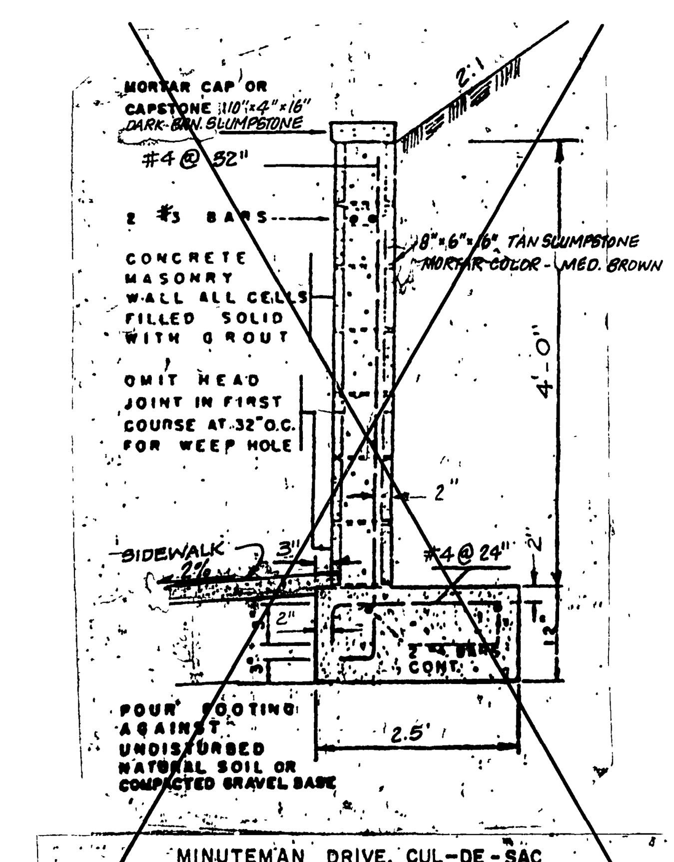

CONC. BLOCK RETAINING WALL

NO SCALE

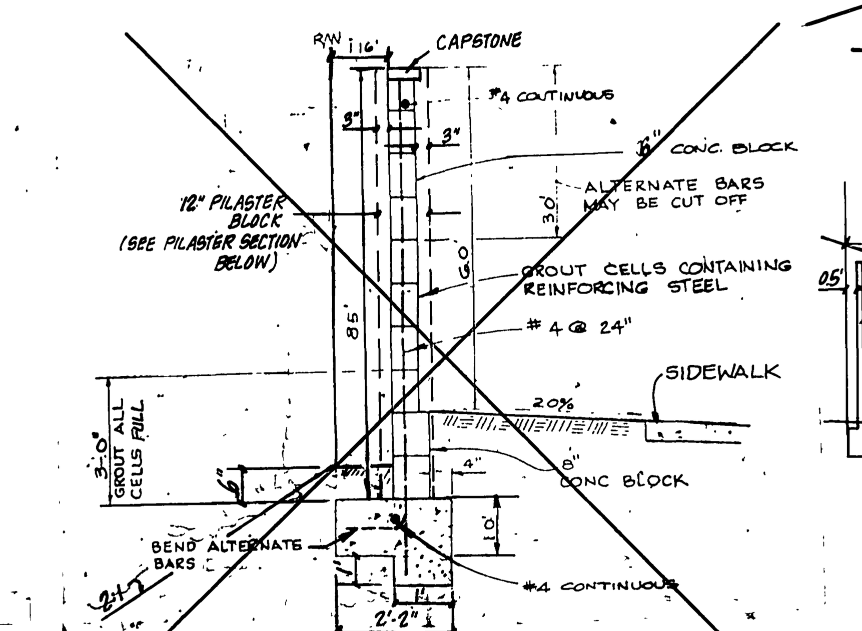

INDIANA AVE. BLOCK WALL SECTION A-A

NO SCALE

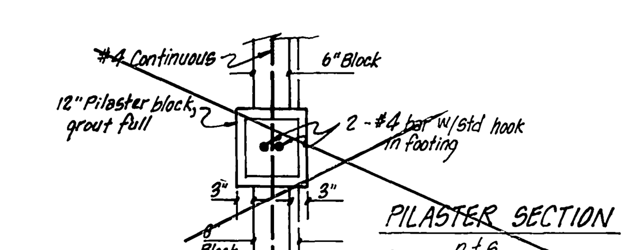

PILASTER SECTION

n.t.s.

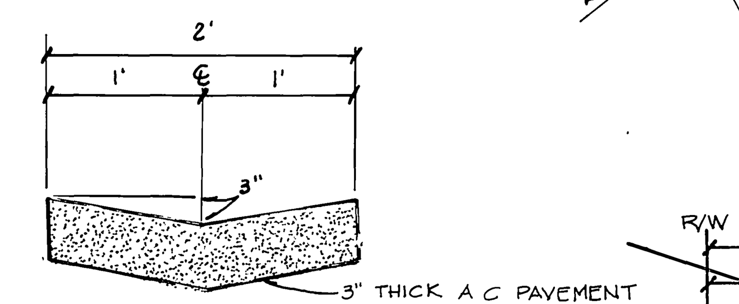

TYPICAL SWALE SECTION

NO SCALE

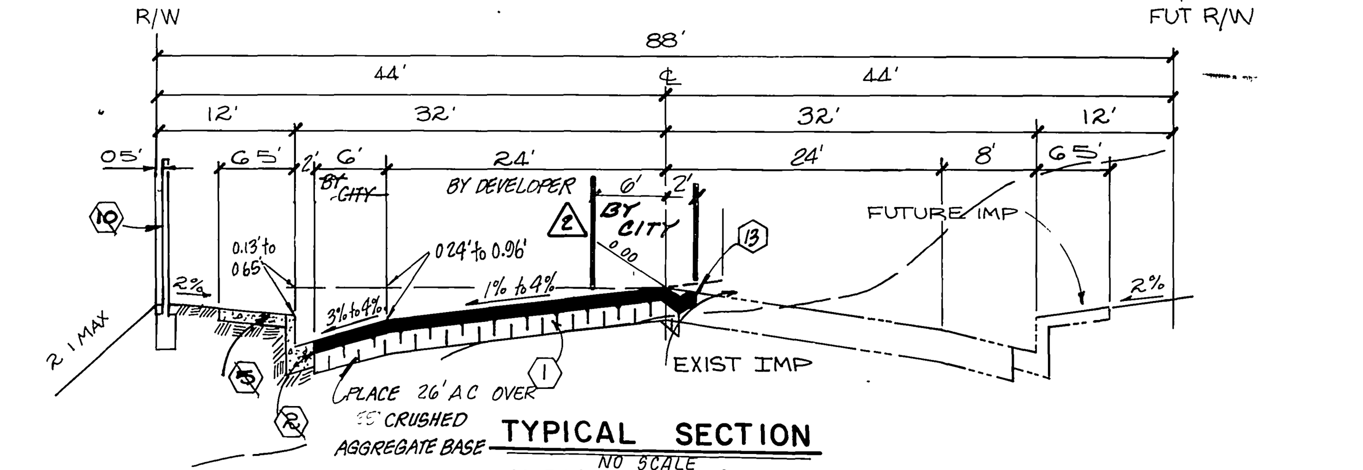

TYPICAL SECTION

NO SCALE

INDIANA AVENUE T.I. = 7.0

STA. 98+75 to 102+50

STA. 104+50 to 105+90

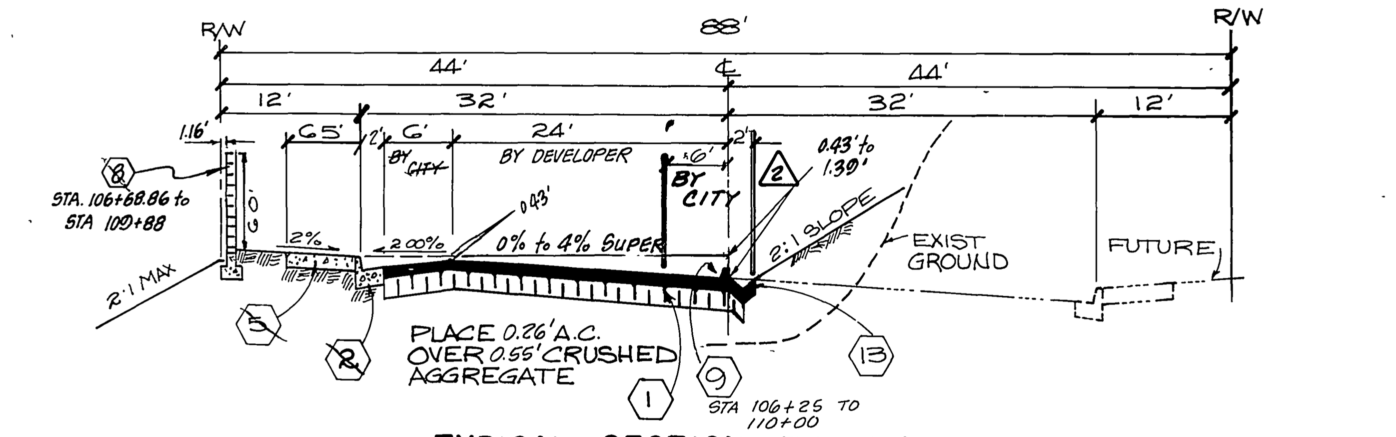

TYPICAL SECTION T.I. = 7.0

INDIANA AVENUE

STA. 96+06.59 to 98+44

STA. 106+25 to 110+00

NO SCALE

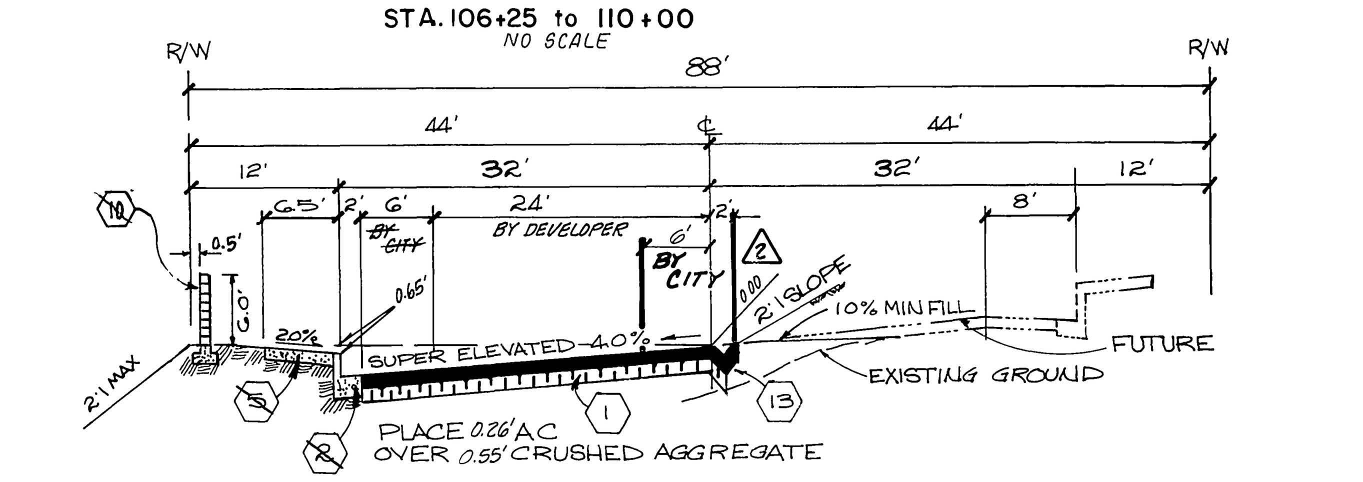

SUPERELEVATION STA. 102+50 to STA. 104+50

TYPICAL SECTION — INDIANA AVENUE T.I = 7.0

NO SCALE

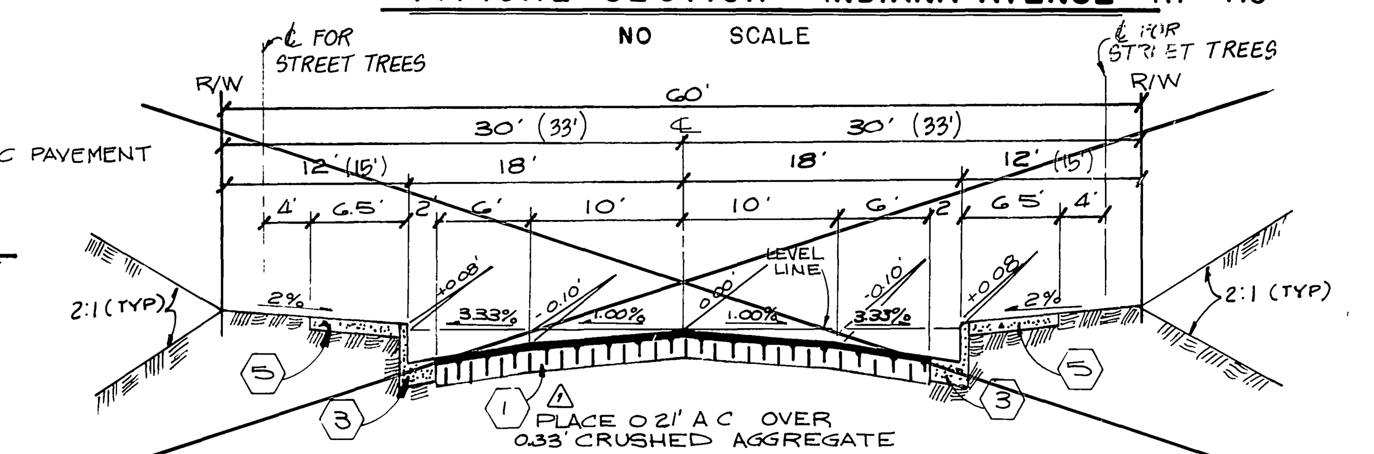

TYPICAL SECTION MUSKET WAY, MINUTEMAN DRIVE & (GWINNETT DRIVE)

NO SCALE

T.I. = 5.0

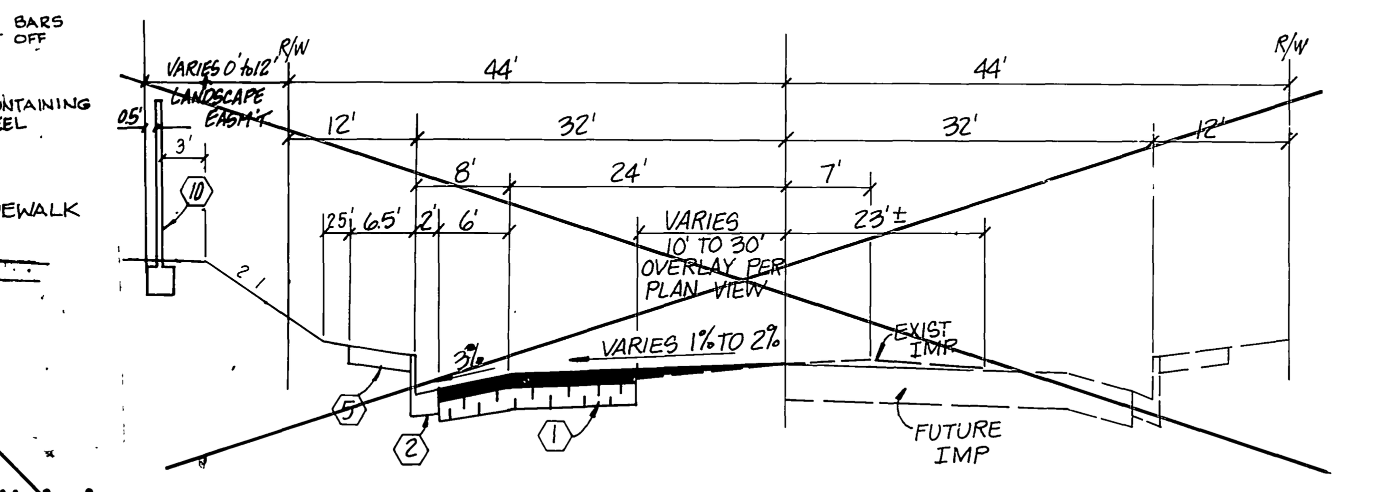

TYPICAL SECTION

NO SCALE

PIERCE STREET

T.I. = 7.0

BENCH MARK

U.S.C. & G.S. B.M. K 88 1924 Disk in headwall on N.W. Cor. Fillmore and Santa Fe R.R. Tracks F.B. 705/34 Elev. 722.010.

CITY OF RIVERSIDE
WATER SYSTEM
3-27-85 DATE

J. F. DAVIDSON ASSOCIATES
CIVIL ENGINEERS • SURVEYORS • PLANNERS
3426 TENTH STREET RIVERSIDE, CAL. — 11200 S. MT. VERNON AVE. COLTON, CAL.
APPROVED BY [signature] DATE 11/7/84
R.E. No. 14312
FOR: CGH CORPORATION

MARK	REVISIONS	APPR.	DATE
2	REVISED A.C. PAVING & BASE LOCATION	[initials]	8-7-85

DESIGNED BY [initials] DRAWN BY [initials] CHECKED BY

CITY OF RIVERSIDE, CALIFORNIA
DEPARTMENT OF PUBLIC WORKS

APPROVED BY	BY	DATE
PRINCIPAL ENGINEER	[initials]	7/25
PARK DEPARTMENT		
TRAFFIC DIVISION		
CHIEF P. W. ENGR.		

APPROVED BY William D. Gardner
DIRECTOR OF PUBLIC WORKS
DATE July 26, 1985

INDIANA AVENUE PAVEMENT PARTICIPATION WITH TRACT 19568

SCALE: AS SHOWN

ACCT. NO.: 30-575-343-07

R-2671A

SHEET 1 OF 3

FILE NO. 83-8007

ADAPTED FROM PLAN R-2671

WORK TO BE DONE ON THIS PROJECT

PIERCE STREET

INDIANA AVENUE

CURVE DATA				
NO.	Δ	R	L	T
(1)	84° 14' 06"	35'	51.46'	31.64'
(2)	10° 30' 43"	632'	115.85'	58.14'
(3)	16° 18' 37"	600'	170.45'	85.80'
(4)	27° 15' 08"	600'	285.39'	145.44'
(5)	11° 19' 51"	568'	112.33'	56.35'
(6)	04° 30' 30"	568'	44.69'	22.36'
(7)	35° 42' 23"	35'	58.46'	38.67'
(8)	35° 42' 24"	35'	58.46'	38.67'
(9)	16° 16' 37"	400'	113.63'	57.20'

	BY DEVELOPER
	GRADING BY DEVELOPER BASE & PVM'T. BY CITY
	PVM'T. REMOVAL & REPLACEMENT
	PVM'T OVERLAY

WROUGHT IRON FENCE DETAIL
NOT TO SCALE

BENCH MARK

U.S.C. & G.S. B.M. K-38 1924 Disk in headwall on N.W. Cor. Fillmore and Santa Fé R.R. Tracks F.B. 706/34 Elev. 722.010.

SOUTHERN CALIFORNIA GAS COMPANY
REVIEWED BY: [signature]
BY: 12-27-85

PACIFIC TELEPHONE
APPROVED BY: [signature]
PUBLIC IMPROVEMENT ENGINEER DATE 12/5/85

CITY OF RIVERSIDE
PUBLIC UTILITIES
ELECTRICAL DIVISION
[signature] 12/18/85
CHIEF, UTILITIES ENGINEER, ELECTRICAL DATE

CITY OF RIVERSIDE
WATER SYSTEM
[signature] 12.27.85
APPROVED WATER DATE

J. F. DAVIDSON ASSOCIATES
CIVIL ENGINEERS • SURVEYORS • PLANNERS
3826 TENTH STREET 11200 S. MT. VERNON AVE.
RIVERSIDE, CAL. COLTON, CAL.
APPROVED BY [signature] DATE 11/7/84
R.E. No. 14312
FOR: CCH CORPORATION

MARK	REVISIONS	APPR.	DATE
2	REVISED C. PAVING & BASE LOCATION	WA	8-7-85
1	ADDED UNDERGROUND ELEC. CONDUIT.	WA	7/5/85

DESIGNED BY [illegible] DRAWN BY [illegible] CHECKED BY

CITY OF RIVERSIDE, CALIFORNIA
DEPARTMENT OF PUBLIC WORKS

APPROVED BY	BY	DATE
PRINCIPAL ENGINEER	[illegible]	7/25
PARK DEPARTMENT	[illegible]	
TRAFFIC DIVISION	[illegible]	7/26
CHIEF P. W. ENGR.		

APPROVED BY
William D. Gardner
DIRECTOR OF PUBLIC WORKS
DATE July 26, 1985

INDIANA AVENUE PAVEMENT PARTICIPATION WITH TRACT 19568

ACCT. NO: 30-575-343-07

R-2671A

SHEET 2 OF 3

HORIZ. SCALE: 1" = 40' VERT. SCALE: 1" = 4'

ADAPTED FROM PLAN R-2671

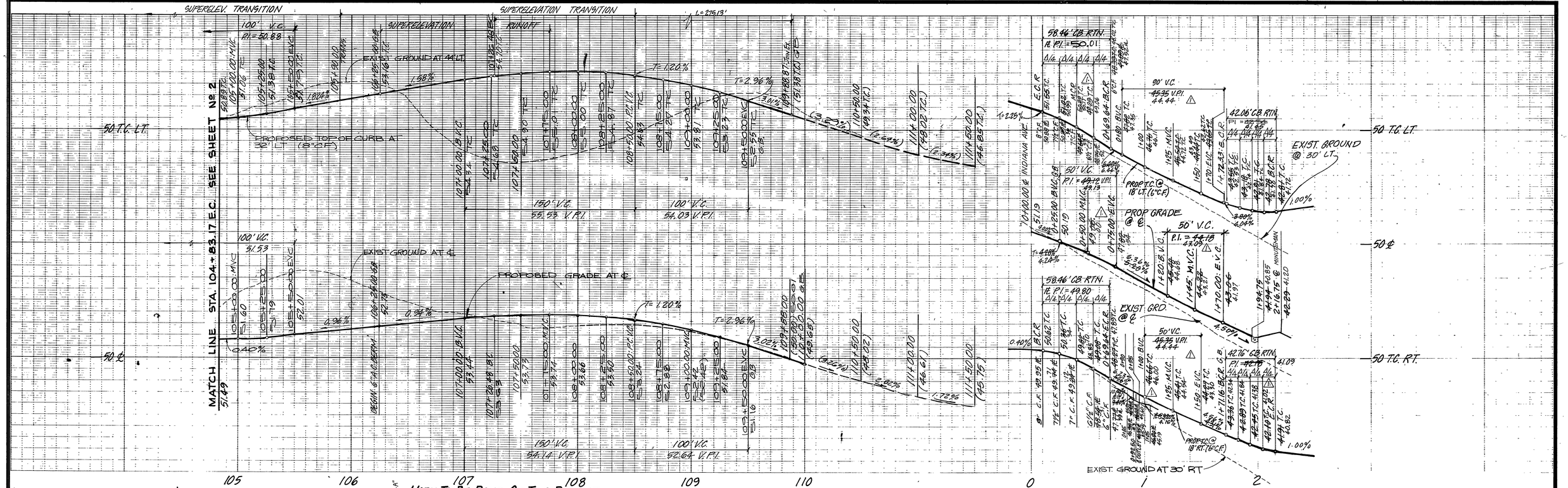

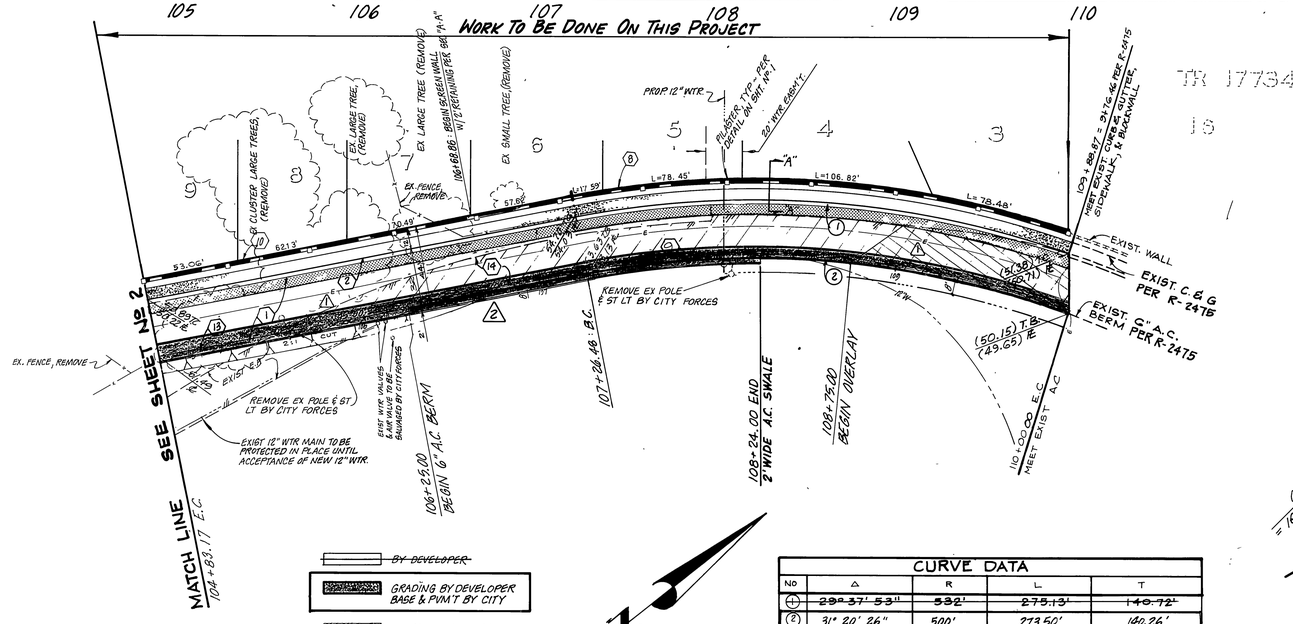

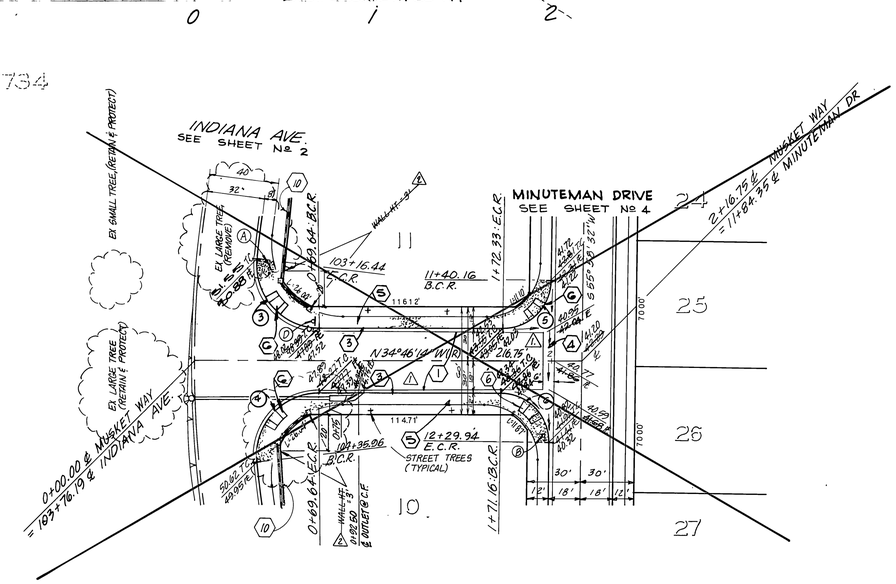

INDIANA AVENUE

MUSKET WAY

CURVE DATA				
NO	Δ	R	L	T
①	~~28° 37' 53"~~	~~532'~~	~~275.13'~~	~~140.72'~~
②	31° 20' 26"	500'	273.50'	140.26'
③	~~95° 42' 25"~~	~~35'~~	~~58.46'~~	~~38.67'~~
④	~~95° 42' 24"~~	~~35'~~	~~58.46'~~	~~38.67'~~
⑤	~~88° 15' 14"~~	~~27'~~	~~42.06'~~	~~26.65'~~
⑥	~~90° 11' 46"~~	~~27'~~	~~42.76'~~	~~27.35'~~

BENCH MARK

U.S.C. & G.S. B.M. K-38 1924 Disk in headwall on N.W. Cor. Fillmore and Santa Fe R.R. Tracks F.B. 706/34 Elev. 722.010.

TR 17734

16

PACIFIC TELEPHONE
APPROVED BY:
PUBLIC IMPROVEMENT ENGINEER — DATE 2/15/85

CITY OF RIVERSIDE
PUBLIC UTILITIES
ELECTRICAL DIVISION
APPROVED BY: John Johnson for CHIEF UTILITIES ENGINEER, ELECTRICAL — DATE 2/8/85

CITY OF RIVERSIDE
WATER SYSTEM
APPROVED WATER — DATE 3-27-85

J. F. DAVIDSON ASSOCIATES
CIVIL ENGINEERS • SURVEYORS • PLANNERS
3426 TENTH STREET, RIVERSIDE, CAL. — 11200 S. MT VERNON AVE, COLTON, CAL
APPROVED BY Robert M. Hughes DATE 11/7/84
R.E. No. 14312
FOR: CCH CORPORATION

MARK	REVISIONS	APPR.	DATE
2	REVISED A.C. PAVING & BASE LOCATION.	wdy	8-7-85
1	ADDED UNDERGROUND ELEC. CONDUIT.	RE	7/5/85

DESIGNED BY: [illegible] DRAWN BY: RMT CHECKED BY:

CITY OF RIVERSIDE, CALIFORNIA
DEPARTMENT OF PUBLIC WORKS

APPROVED BY	BY	DATE
PRINCIPAL ENGINEER	RE	7/25
PARK DEPARTMENT		
TRAFFIC DIVISION	D. Ray	7/26
CHIEF P. W. ENGR		

APPROVED BY: William D. Gardner
DIRECTOR OF PUBLIC WORKS
DATE July 26, 1985

INDIANA AVENUE PAVEMENT PARTICIPATION WITH TRACT 19568

HORIZ. SCALE: 1" = 40' VERT. SCALE: 1" = 4'

ACCT. NO.: 30-575-343-07

R-2671A

SHEET 3 OF 3

ADAPTED FROM PLAN R-2671