GENERAL NOTES

1. IT SHALL BE THE RESPONSIBILITY OF THE CONTRACTOR TO CLEAR THE RIGHT OF WAY IN ACCORDANCE WITH THE PROVISIONS OF LAW AS IT AFFECTS EACH UTILITY INCLUDING IRRIGATION LINES AND APPURTENANCES AND AT NO COST TO THE CITY.
2. CONSTRUCTION SHALL BE IN ACCORDANCE WITH THE CITY OF RIVERSIDE DEPARTMENT OF PUBLIC WORKS, STANDARD DRAWINGS, AND THE STANDARD SPECIFICATIONS FOR PUBLIC WORKS CONSTRUCTION, 1985 EDITION.
3. TRIM EDGE OF EXISTING PAVEMENT WHERE NEW PAVEMENT JOINS TO A SMOOTH, STRAIGHT LINE. CONSTRUCT MATCH-UP PAVING AS SHOWN ON PLAN AND OVERLAY PAVING AS DIRECTED IN THE FIELD TO PRODUCE A SMOOTH SECTION. PRIVATE ENGINEER ESTIMATES OVERLAY TO BE 45 TONS.
4. FOR MAILBOXES FOR APARTMENT HOUSES, DEVELOPER TO CHECK WITH THE U.S.P.S. FOR THE NUMBER AND LOCATION OF MAILBOXES.
5. CURB AND GUTTER SHALL BE STAKED WITH 3' OFFSETS AT 25' INTERVALS.
6. CURB AND GUTTER SHALL BE STAKED WITH 3' OFFSETS AT 12.5' INTERVALS AND 2 ROWS OF #3 RE-BAR SHALL BE PLACED IN GUTTER WHERE GRADE IS LESS THAN 0.40%. PLACE ¾" DOWEL AT EXPANSION JOINTS.
7. ALL TRAFFIC SIGNS SHALL BE INSTALLED PRIOR TO OPENING THE STREETS TO TRAFFIC.
8. SEE TRAFFIC SIGNAL PLAN X-480 FOR TRAFFIC SIGNAL FACILITIES AND STRIPING.
9. ANY TRAFFIC CONTROL STRIPING OBLITERATED AND/OR BADLY WORN DURING CONSTRUCTION SHALL BE RESTORED BY THE CONTRACTOR WITHIN FIVE DAYS AFTER NOTIFICATION FROM THE CITY INSPECTORS.
10. FINAL STRIPING FOR TRAFFIC CONTROL AND/OR PAVEMENT MARKING TO BE THE RESPONSIBILITY OF THE DEVELOPER.
11. ALL FLAGGED ELEVATIONS SHALL BE STAKED IN THE FIELD BY THE PRIVATE ENGINEER.
12. THE PRIVATE ENGINEER SIGNING THESE PLANS IS RESPONSIBLE FOR ASSURING THE ACCURACY AND ACCEPTABILITY OF THE WORK HEREON. IN THE EVENT OF DISCREPANCIES ARISING DURING CONSTRUCTION, THE PRIVATE ENGINEER SHALL BE RESPONSIBLE FOR DETERMINING AN ACCEPTABLE SOLUTION AND REVISING THE PLANS FOR APPROVAL BY THE CITY.
13. THE CONTRACTOR SHALL CALL IN A LOCATION REQUEST TO UNDERGROUND SERVICE ALERT (USA), PHONE NO. 1-800-422-4133, TWO WORKING DAYS BEFORE DIGGING. NO CONSTRUCTION PERMIT WILL BE ISSUED BY THE PUBLIC WORKS DEPARTMENT INVOLVING EXCAVATION FOR UNDERGROUND FACILITIES UNLESS THE APPLICANT HAS BEEN PROVIDED AN INQUIRY IDENTIFICATION NUMBER BY U.S.A.
14. THE PRIVATE ENGINEER PREPARING THESE PLANS SHALL BE RESPONSIBLE FOR PRESERVING OR RE-ESTABLISHING AND REFERENCING SURVEY MONUMENTS DESTROYED, DISTURBED OR BURIED AS A RESULT OF CONSTRUCTION SHOWN HEREON.
15. ON ALL AREAS WITHIN PUBLIC RIGHT OF WAY WHERE THE FILL IN ONE (1) FOOT OR GREATER, A LETTER WILL BE REQUIRED FROM THE SOILS ENGINEER, CERTIFYING THE COMPACTION OF THE FILL BELOW SUBGRADE, PRIOR TO ISSUANCE OF THE CONSTRUCTION PERMIT/CUT SHEETS.
16. IN ORDER TO COORDINATE THE CITY'S PORTION OF THE WORK, THE DEVELOPER AND/OR CONTRACTOR SHALL GIVE THE CITY 60 DAYS NOTICE IN ORDER THAT THE DEVELOPER'S AND THE CITY'S WORK MAY BE INSTALLED CONCURRENTLY.
17. STREET OPENING PERMIT FOR CONSTRUCTION AND/OR MODIFICATION OF TRAFFIC SIGNALS REQUIRED.
18. SEE "STREET LIGHTING PLANS" FOR QUANTITY AND LOCATION OF REQUIRED STREET LIGHTS.
19. DEVELOPER TO GIVE CITY WATER DIVISION FIVE (5) WORKING DAYS WRITTEN NOTICE PRIOR TO START OF CONST. AND TO ALLOW CITY TEN (10) WORKING DAYS FOR COMPLETION OF WORK. (787-7611)

NOTICE TO CONTRACTOR

THE EXISTENCE AND LOCATION OF ANY UNDERGROUND UTILITY PIPES OR STRUCTURES SHOWN ON THESE PLANS ARE OBTAINED BY A SEARCH OF THE AVAILABLE RECORDS. TO THE BEST OF OUR KNOWLEDGE, THERE ARE NO EXISTING UTILITIES EXCEPT THOSE SHOWN ON THESE PLANS.

THE CONTRACTOR IS REQUIRED TO TAKE DUE PRECAUTIONARY MEASURES TO PROTECT THE UTILITY LINES SHOWN AND ANY OTHER LINES NOT OF RECORD OR NOT SHOWN ON THESE PLANS.

CALL UNDERGROUND SERVICE ALERT (USA) 1-800-422-4133 AT LEAST 48 HOURS PRIOR TO EXCAVATION

THE QUANTITY ESTIMATE SHOWN HEREON IS FOR THE USE OF GOVERNING AGENCIES IN DETERMINING BOND AMOUNTS AND/OR FEES AND IS NOT TO BE USED FOR BID PURPOSES.

PARKS DEPARTMENT NOTES

1. ALL RELATED WORK SHALL CONFORM TO THE CITY OF RIVERSIDE, PARK AND RECREATION DEPARTMENT STANDARDS.
2. CONTACT THE PARK PROJECTS INSPECTOR A MINIMUM OF 48 HOURS IN ADVANCE AT 787-7223 TO SCHEDULE INSPECTIONS. INSPECTIONS SHALL BE REQUIRED: A) WHEN PLANT LOCATIONS HAVE BEEN SPOTTED IN THE FIELD PRIOR TO DIGGING PLANT PITS, B) WHILE DIGGING PLANT PITS AND PLANTING/RELOCATING TREES, C) AFTER PLANTING AND ALL OTHER INDICATED OR SPECIFIED WORK HAS BEEN COMPLETED FOR START OF MAINTENANCE, AND D) AT END OF MAINTENANCE/FINAL ACCEPTANCE THE DEVELOPER WILL BE RELEASED FROM MAINTENANCE ONLY UPON RECEIPT OF WRITTEN NOTIFICATION FROM THE CITY THAT THE PARK AND RECREATION DEPARTMENT IS ASSUMING MAINTENANCE RESPONSIBILITIES.
3. THE DEVELOPER SHALL MAINTAIN ALL PLANTINGS FOR A MINIMUM PERIOD OF ONE (1) YEAR.
4. STREET TREE PLANTING SHALL BE AS FOLLOWS.

STREET NAME	BOTANICAL NAME/COMMON NAME	MIN. SIZE	SPACING	NO. REQ.
MAGNOLIA AVE.	WASHINGTONIA CALIFORNICA / FAN PALM	AS SHOWN ON PLAN	AS SHOWN	1
	WASHINGTONIA FILIFERA / FAN PALM	AS SHOWN ON PLAN	AS SHOWN	1
PIERCE ST.	MAGNOLIA GRANDIFLORA / SOUTHERN MAGNOLIA	15 GAL.	40'	3

5. A PUBLIC WORKS AND PARK AND RECREATION DEPARTMENT PERMIT IS REQUIRED PRIOR TO COMMENCEMENT OF TREE RELOCATION AND/OR REMOVAL WORK. FOR ALL TREES WITHIN THE ULTIMATE PAVEMENT AREA, BACKFILL OF ALL HOLES IS TO BE INSPECTED BY THE CITY FOR PROPER COMPACTION.
6. ALL STREET TREES TO BE AUTOMATICALLY IRRIGATED.
7. INSTALL SCHEDULE 40 P.V.C. PIPE SLEEVE AS SHOWN. PLACE 18" BELOW GRADE, 12' APART, AND 18" BEYOND CURB FACE. SEE PLAN FOR SIZE.

CONSTRUCTION NOTES

200 ---CONSTRUCT 6" CURB AND GUTTER PER STD. 200 TYPE 1
325 ---CONSTRUCT CURB LINE SIDEWALK PER STD. 325
1 ---CONSTRUCT A.C. OVERLAY, INDICATED BY [▨] ON PLAN
2 ---CONSTRUCT 3.5" OF A.C. PAVING OVER 17.5" OF CRUSHED AGGREGATE BASE, INDICATED BY [ ] ON PLAN, PER S.P. #1284, "P"=15.
2A ---CONSTRUCT 3" OF A.C. PAVING OVER 15" OF CRUSHED AGGREGATE BASE. INDICATED BY [ ] ON PLAN. PER S.P. #1284, "P"=15.
200 II ---CONSTRUCT 6" CURB ONLY PER STD. 200.
405 ---CONSTRUCT CATCH BASIN PER STD. 405
304 ---CONSTRUCT WHEELCHAIR RAMP PER STD. 304, MODIFIED, SEE BELOW
220 --CONSTRUCT X-GUTTER PER STD. 220.
3 --INSTALL F1 DELINEATORS AT 20' ON CENTER.
4 --EXIST. WATER SERV. LINE TO BE CUT & PLUGGED AT MAIN LINE; EXIST. W.M. & BOXES TO BE SALVAGED; ALL WORK TO BE DONE BY CITY FORCES.
5 -- EXIST. W.V. BOX, ADJUST TO GRADE BY CITY FORCES.
6 --EXIST. WATER FACILITY, PROTECT IN PLACE.
7 --REMOVE EXIST. C.M.P., REPLACE WITH 27" R.C.P.

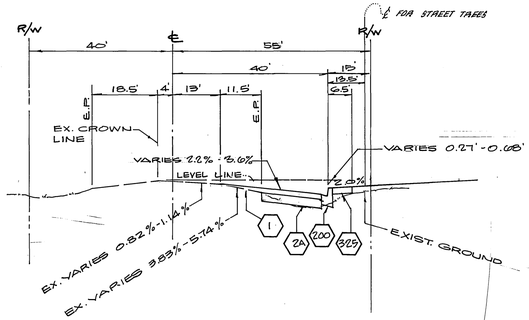

TYPICAL SECTION
PIERCE STREET
T.I. = 7.0

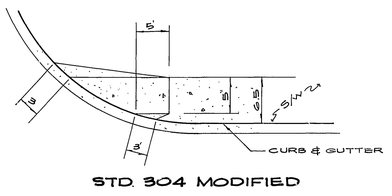

STD. 304 MODIFIED

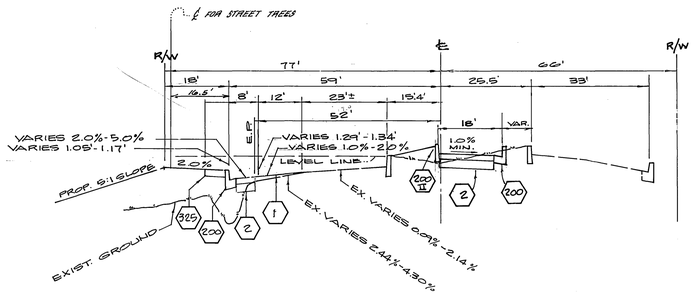

TYPICAL SECTION
MAGNOLIA AVENUE
T.I. = 8.0

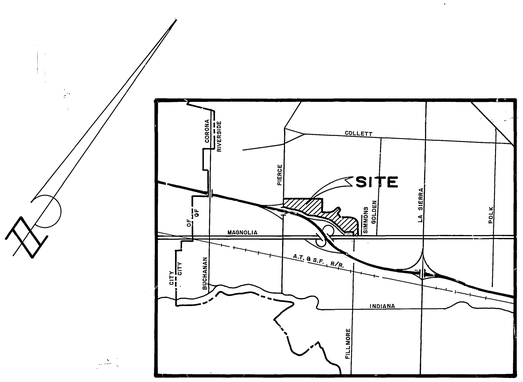

LOCATION MAP

REGISTERED PROFESSIONAL ENGINEER
JOHN JORDAN
EXPIRES 03-31-90
No. 27983
CIVIL
STATE OF CALIFORNIA

BENCH MARK
FD. BRASS DISC SET IN CONC. HEADWALL 21'± W'LY FROM ℄ OF FILLMORE ST., 12'± N'LY FROM ℄ OF AT&SF R/R STAMPED USC&GS BM K-38, 1924, RIV. CO. BM. 601-29
ELEV. = 722.010

*As built 9/23/87 YE

INDEXED D.N.

CITY OF RIVERSIDE
WATER SYSTEM
E.I. Wroman 2/25/86
APPROVED BY: DATE

ALBERT A. WEBB ASSOCIATES
CIVIL ENGINEERS
3788 McCRAY STREET
RIVERSIDE, CALIFORNIA
(714) 686-1070
APPROVED BY [signature] DATE 2.25.86
R.E. No. 27988
W.O 85-64 FOR: ROBERTSON HOMES F.S. 1053

MARK	REVISIONS	APPR.	DATE

DESIGNED BY R.H. DRAWN BY R.H. CHECKED BY R.H.

CITY OF RIVERSIDE, CALIFORNIA
PUBLIC WORKS DEPARTMENT

APPROVED BY	BY	DATE
PRINCIPAL ENGINEER		
PARK DEPARTMENT	DB	3-26-86
TRAFFIC DIVISION	[illegible]	3.3.86
CHIEF PUB. WKS. ENGR.		

APPROVED BY: William D. Harding, DIRECTOR OF PUBLIC WORKS
DATE 3-14-86

STREET PLAN & PROFILE
MAGNOLIA AVE., PIERCE ST.
INDEX SHEET
PRD-2-856
TR. NO. 21,228
SCALE: AS SHOWN.

ACCOUNT No.
DRAWING NUMBER R-2752
SHEET 1 OF 3
W.O. 85-100A

PC 1829

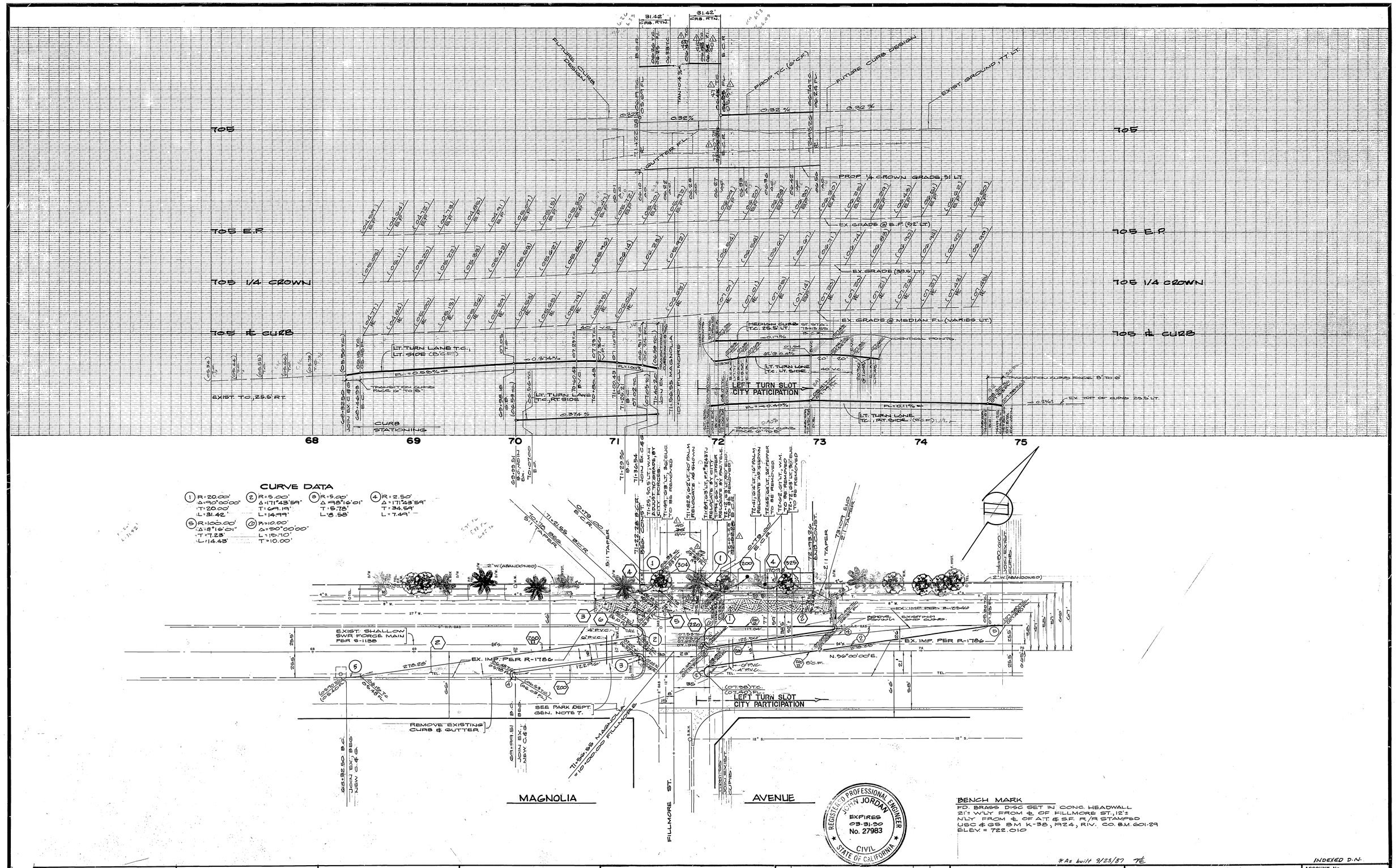

REGISTERED PROFESSIONAL ENGINEER JOHN JORDAN EXPIRES 03-31-90 No. 27983 CIVIL STATE OF CALIFORNIA

BENCH MARK
FD. BRASS DISC SET IN CONC. HEADWALL
21'± W'LY FROM ℄ OF FILLMORE ST., 12'±
N'LY FROM ℄ OF A.T. & S.F. R/R STAMPED
USC & GS BM K-38, 1924, RIV. CO. B.M. 601-29
ELEV. = 722.010

*As built 9/23/87 TE

INDEXED D.N.

PACIFIC TELEPHONE	SO. CALIFORNIA GAS CO.	CITY OF RIVERSIDE OVERHEAD & UNDERGROUND	CITY OF RIVERSIDE WATER SYSTEM	ALBERT A. WEBB ASSOCIATES CIVIL ENGINEERS 3788 McCRAY STREET RIVERSIDE, CALIFORNIA (714) 686-1070
APPROVED BY: [signature] DATE: 2-6-86	APPROVED BY: [signature] DATE: 2-4-86	CHIEF UTILITIES ENG.: [signature] DATE: 1/21/86	APPROVED BY: [signature] DATE: 2/25/86	APPROVED BY: [signature] DATE: 9-25-85 R.E. No. 27983 W.O. 85-64 FOR: ROBERTSON HOMES F.B. 1053

MARK	REVISIONS	APPR.	DATE
1	REVISED SLT CURB RETURN AT ENTRANCE FOR GRADE AND STATION.	KLLC	9/27/86

DESIGNED BY J.M.B. DRAWN BY R.H. CHECKED BY J.M.B.

CITY OF RIVERSIDE, CALIFORNIA
PUBLIC WORKS DEPARTMENT

APPROVED BY	BY	DATE
PRINCIPAL ENGINEER	[initials]	3/6/86
PARK DEPARTMENT	[initials]	2-25-86
TRAFFIC DIVISION	[initials]	3-3-86
CHIEF PUB. WKS. ENGR.	[initials]	3/6/86

APPROVED BY William D. Gardner DIRECTOR OF PUBLIC WORKS DATE 3-14-86

STREET PLAN & PROFILE
MAGNOLIA AVE.
PRD-2-856
TR. NO. 21,228
SCALE: HORIZ.-1"=40', VERT.-1"=4'

ACCOUNT No.
DRAWING NUMBER R-2752
SHEET 2 OF 3
W.O. 85-100 A

PC 1829

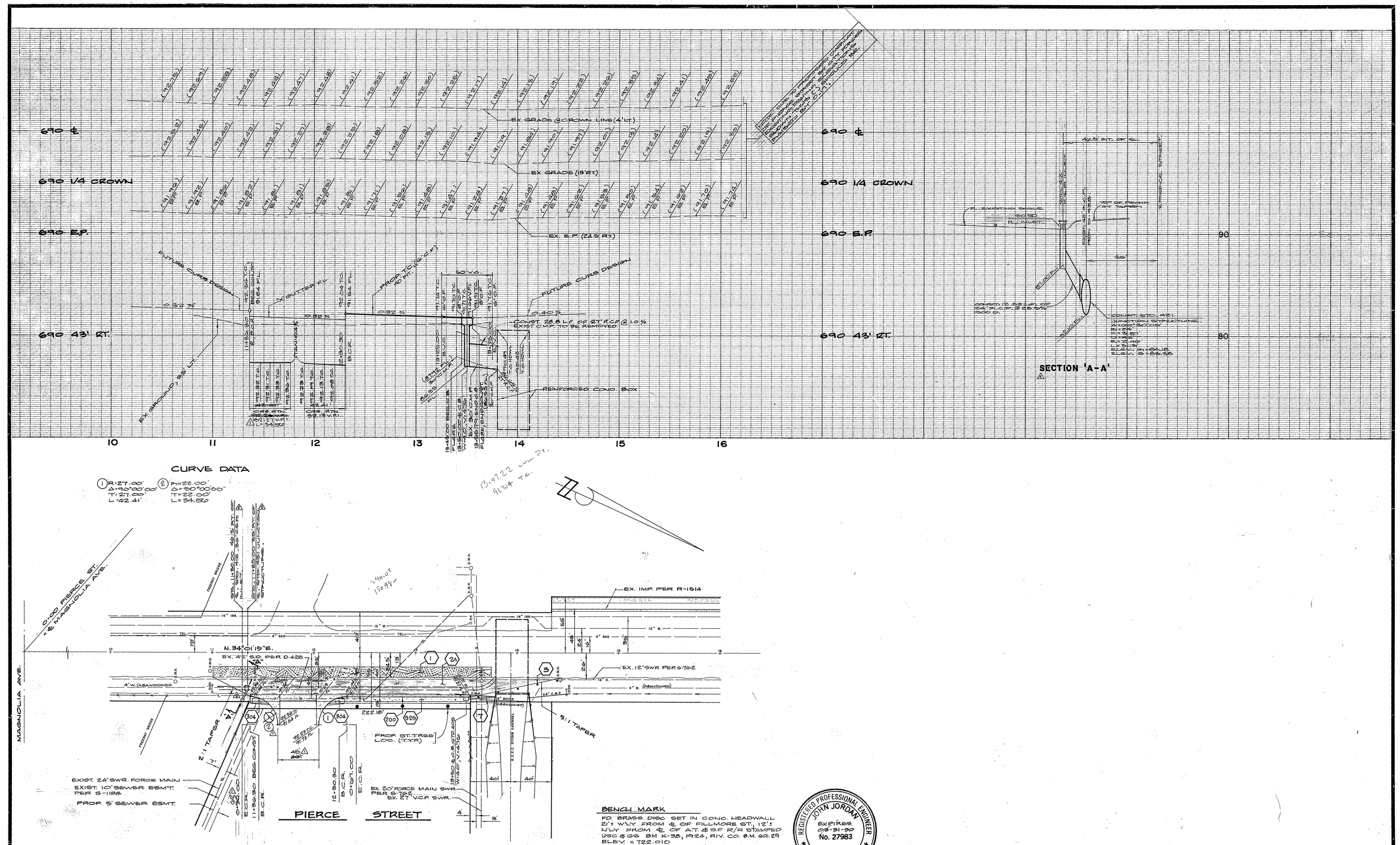

BENCH MARK

FD. BRASS DISC SET IN CONC. HEADWALL 21'± W'LY FROM ℄ OF FILLMORE ST., 12'± N'LY FROM ℄ OF A.T. & S.F. R/R STAMPED USC & GS BM K-38, 1924, RIV. CO. B.M. 601-29 ELEV. = 722.010

REGISTERED PROFESSIONAL ENGINEER JOHN JORDAN EXPIRES 03-31-90 No. 27983 CIVIL STATE OF CALIFORNIA

PACIFIC TELEPHONE	SO. CALIFORNIA GAS CO.		CITY OF RIVERSIDE WATER SYSTEM	ALBERT A. WEBB ASSOCIATES CIVIL ENGINEERS 3788 McCRAY STREET RIVERSIDE, CALIFORNIA (714) 686-1070		CITY OF RIVERSIDE, CALIFORNIA PUBLIC WORKS DEPARTMENT	STREET PLAN & PROFILE	INDEXED D.N. ACCOUNT No.
APPROVED BY 2-6-86 DATE	APPROVED BY 2-4-86 DATE		APPROVED BY 2/25/86 DATE	APPROVED BY DATE 3-25-85 R.E. No. 27983		APPROVED BY / DATE / APPROVED BY	PIERCE ST. PRD-2-856 TR. NO. 21,228	DRAWING NUMBER R-2752 SHEET 3 OF 3
				W.O. 85-64 FOR: ROBERTSON HOMES F.B. 1053		DESIGNED BY J.M.B. DRAWN BY R.H. CHECKED BY J.M.B.	SCALE: HORIZ. - 1"=40', VERT. - 1"=4'	W.O. 85-100 A

MARK	REVISIONS	APPR.	DATE
2	ADDED C.O. AT 11+30 & SECTION A-A	WLLC	12/29/86
1	REVISED S'LT CURB RETURN AT ENTRANCE, RADIUS & GRADE.	WLLC	9/17/86

APPROVED BY	BY	DATE
PRINCIPAL ENGINEER		3/6/86
PARK DEPARTMENT		2-25-86
TRAFFIC DIVISION		3-3-86
CHIEF PUB. WKS. ENGR.		3/6/86

DIRECTOR OF PUBLIC WORKS DATE 3-14-86

* As built 9/23/87 TE

PC 1829