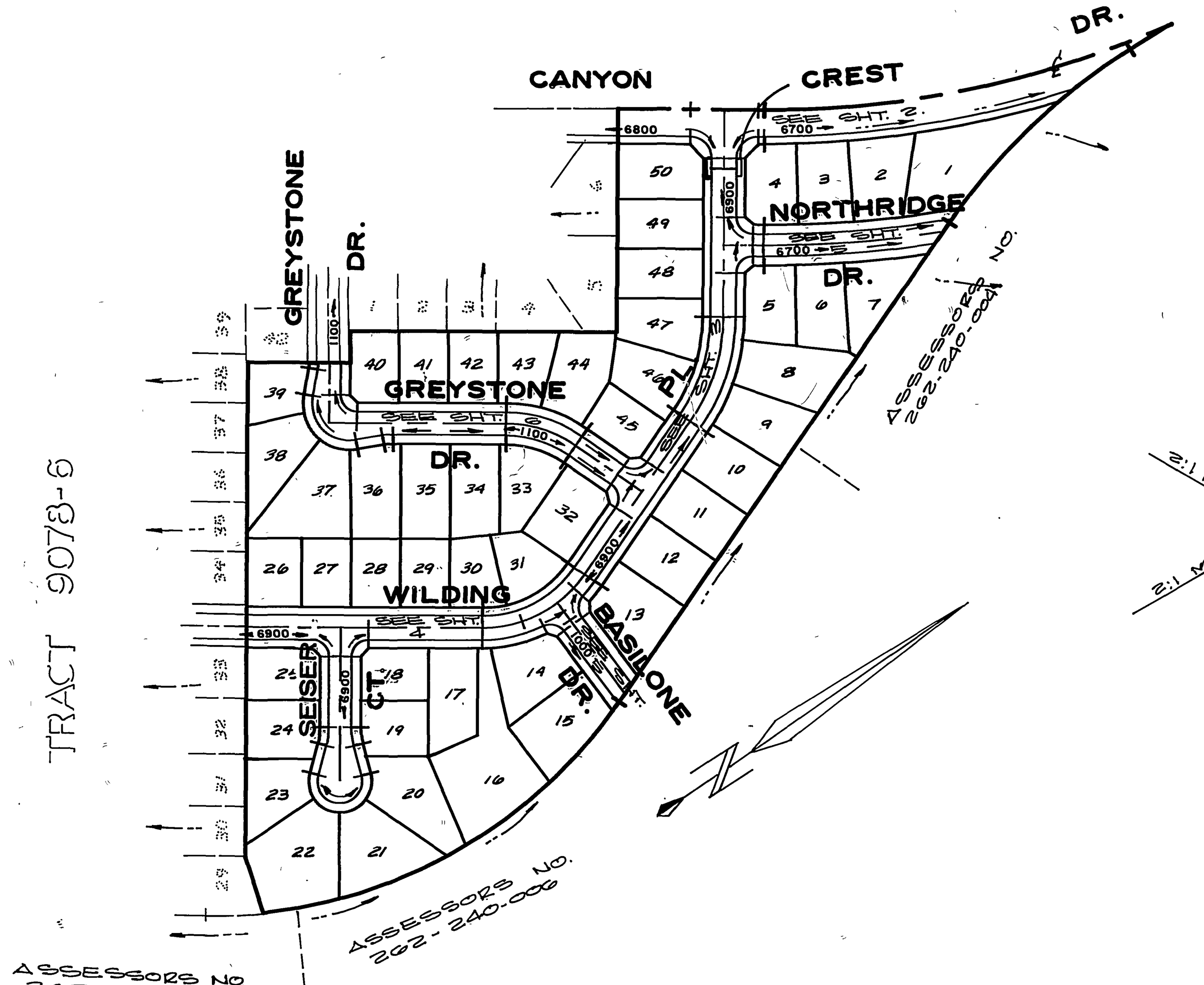


INDEX MAP
NO SCALE

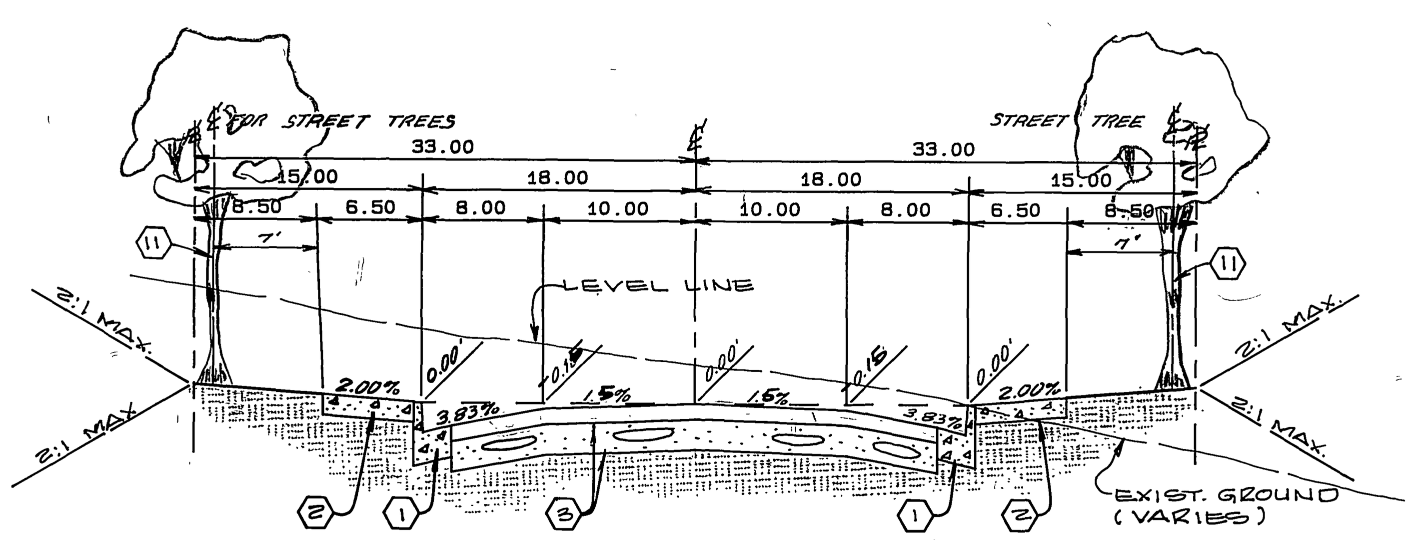


TYPICAL SECTION
NO SCALE

NORTHRIDGE DR.
TI.= 5
BASILUNE DR.
TI.= 5
SEISER DR.
TI.= 5
GREYSTONE DR.
TI.= 5

## PARKS DEPARTMENT GENERAL NOTES

1. ALL RELATED WORK SHALL CONFORM TO THE CITY OF RIVERSIDE, PARK AND RECREATION DEPARTMENT STANDARDS.

2. CONTACT THE PARK PROJECTS INSPECTOR A MINIMUM OF 48 HOURS IN ADVANCE AT 787-7223 TO SCHEDULE INSPECTIONS. INSPECTIONS SHALL BE REQUIRED: A) WHEN PLANT LOCATIONS HAVE BEEN SPOTTED IN THE FIELD PRIOR TO DIGGING PLANT PITS, B) WHILE DIGGING PLANT PITS AND PLANTING/RELOCATING TREES, C) AFTER PLANTING AND ALL OTHER INDICATED OR SPECIFIED WORK HAS BEEN COMPLETED FOR START OF MAINTENANCE, AND D) AT END OF MAINTENANCE/FINAL ACCEPTANCE THE DEVELOPER WILL BE RELEASED FROM MAINTENANCE ONLY UPON RECEIPT OF WRITTEN NOTIFICATION FROM THE CITY THAT THE PARK AND RECREATION DEPARTMENT IS ASSUMING MAINTENANCE RESPONSIBILITIES.

3. THE DEVELOPER SHALL MAINTAIN ALL PLANTINGS FOR A MINIMUM PERIOD OF ONE (1) YEAR.

4. PUBLIC WORKS AND PARK AND RECRECATION DEPARTMENT PERMIT ARE REQUIRED PRIOR TO COMMENCEMENT OF TREE RELOCATION AND/OR REMOVAL WORK. FOR ALL TREES WITHIN THE ULTIMATE PAVING AREA. BACKFILL OF ALL HOLES IS TO BE INSPECTED BY THE CITY FOR PROPER COMPACTION.

5. STREET TREE PLANTING SHALL BE AS FOLLOWS:

| | STREET NAME | BOTANICAL NAME/COMMON NAME | MIN. SIZE | SPACING | NO. REQ. |
|---|---|---|---|---|---|
| A. | NORTHRIDGE DR. | PINUS CANARIENSIS - CANARY ISLAND PINE | 15 GAL. | 45' | 13 |
| B. | WILDING PL. | PRUNUS CERASIFERA KAUTER VESUVIUS - RED LEAF PLUM | 15 GAL. | 45' | 48 |
| C. | GREYSTONE DR. | PRUNUS CERASIFERA KAUTER VESUVIUS - RED LEAF PLUM. | 15 GAL. | 45' | 25 |
| D. | BASILONE DR. | PINUS CANARIENSIS - CANARY ISLAND PINE | 15 GAL. | 45' | 6 |
| E. | SEISER CT. | PINUS CANARIENSIS - CANARY ISLAND PINE | 15 GAL | 45' | 12 |
| F. | CANYON CREST | SEE REVERCE FRONTAGE PLAN | | | |

REVERSE FRONTAGE PLAN NUMBER A-1837
PREPARED BY: ORTON ASSOCIATES (714) 985-7000

## GENERAL NOTES

1. IT SHALL BE THE RESPONSIBILITY OF THE CONTRACTOR TO CLEAR THE RIGHT OF WAY IN ACCORDANCE WITH THE PROVISIONS OF LAW AS IT AFFECTS EACH UTILITY INCLUDING IRRIGATION LINES AND APPURTENANCES AND AT NO COST TO THE CITY.

2. CONSTRUCTION SHALL BE IN ACCORDANCE WITH THE CITY OF RIVERSIDE DEPARTMENT OF PUBLIC WORKS, STANDARD DRAWINGS, STANDARD DRAWING NO. 10, AND THE STANDARD SPECIFICATIONS FOR PUBLIC WORKS CONSTRUCTION, CURRENT EDITION.

3. TRIM EDGE OF EXISTING PAVEMENT WHERE NEW PAVEMENT JOINS TO A SMOOTH, STRAIGHT LINE. CONSTRUCT MATCH-UP PAVING AS SHOWN ON PLAN AND OVERLAY PAVING AS DIRECTED IN THE FIELD TO PRODUCE A SMOOTH SECTION.

4. CONSTRUCT DRIVEWAY APPROACHES PER STD. DWG. 302. EXACT SIZE AND LOCATION TO BE DETERMINED AT THE TIME OF CONSTRUCTION AS APPROVED BY THE TRAFFIC ENGINEER.

5. CURB AND GUTTER SHALL BE STAKED WITH 3' OFFSETS AT 25' INTERVALS.

6. ALL TRAFFIC SIGNS SHALL BE INSTALLED PRIOR TO OPENING THE STREETS TO TRAFFIC.

7. ANY TRAFFIC CONTROL STRIPING OBLITERATED AND/OR BADLY WORN DURING CONSTRUCTION SHALL BE RESTORED BY THE CONTRACTOR WITHIN FIVE DAYS AFTER NOTIFICATION FROM THE CITY INSPECTORS.

8. FINAL STRIPING FOR TRAFFIC CONTROL AND/OR PAVEMENT MARKING TO BE THE RESPONSIBILITY OF THE DEVELOPER.

9. THE SUBDIVIDER SHALL ARRANGE FOR A SOIL TEST TO BE MADE BY A SOILS ENGINEER AFTER THE STREETS HAVE BEEN PREPARED TO ROUGH GRADE AND PRIOR TO CURB AND GUTTER CONSTRUCTION. DEPTH OF BASE MATERIAL AND A.C. PAVING SHALL BE DETERMINED BY THE CITY OF RIVERSIDE DESIGN STANDARDS AND TEST PROCEDURES.

10. SEE "STREET LIGHTING PLANS" FOR QUANTITY AND LOCATION OF REQUIRED STREET LIGHTS.

11. ALL FLAGGED ELEVATIONS SHALL BE STAKED IN THE FIELD BY THE PRIVATE ENGINEER.

12. THE PRIVATE ENGINEER SIGNING THESE PLANS IS RESPONSIBLE FOR ASSURING THE ACCURACY AND ACCEPTABILITY OF THE WORK HEREON. IN THE EVENT OF DISCREPANCIES ARISING DURING CONSTRUCTION, THE PRIVATE ENGINEER SHALL BE RESPONSIBLE FOR DETERMINING AN ACCEPTABLE SOLUTION AND REVISING THE PLANS FOR APPROVAL BY THE CITY.

13. THE CONTRACTOR SHALL CALL IN A LOCATION REQUEST TO UNDERGROUND SERVICE ALERT (USA). PHONE NO. 1-800-422-4133. TWO WORKING DAYS BEFORE DIGGING. NO CONSTRUCTION PERMIT WILL BE ISSUED BY THE PUBLIC WORKS DEPARTMENT INVOLVING EXCAVATION FOR UNDERGROUND FACILITIES UNLESS THE APPLICANT HAS BEEN PROVIDED AN INQUIRY IDENTIFICATION NUMBER BY U.S.A.

14. IN RESIDENTIAL AREAS 6" X 6" OR 6" DIAMETER BLOCKOUTS FOR MAILBOXES ARE REQUIRED IN CURB SIDEWALK 10" TO 14" FROM CURB FACE AT THE PROPERTY LINE BETWEEN ADJACENT RESIDENCES.

15. THE DEVELOPER SHALL BE RESPONSIBLE FOR PRESERVING OR RE-ESTABLISHING AND REFERENCING SURVEY MONUMENTS DESTROYED, DISTURBED OR BURIED AS A RESULT OF CONSTRUCTION SHOWN HEREON.

16. ON ALL AREAS WITHIN PUBLIC RIGHT OF WAY WHERE THE FILL IN ONE (1) FOOT OR GREATER, A LETTER WILL BE REQUIRED FROM THE SOILS ENGINEER, CERTIFYING THE COMPACTION OF THE FILL BELOW SUBGRADE, PRIOR TO ISSUANCE OF THE CONSTRUCTION PERMIT/CUT SHEETS.

17. IN ORDER TO COORDINATE THE CITY'S PORTION OF THE WORK, THE DEVELOPER AND/OR CONTRACTOR SHALL GIVE THE CITY 60 DAYS' NOTICE IN ORDER THAT THE DEVELOPER'S AND THE CITY'S WORK MAY BE INSTALLED CONCURRENTLY. THE DEVELOPER SHALL PREPARE AND COMPACT ROUGHT SUBGRADE (+.1') AND IS RESPONSIBLE FOR THE CONDITION OF THE SUBGRADE UNTIL ACCEPTED BY THE CITY AND UNTIL THE CITY'S CONTRACTOR STARTS WORKING. THE DEVELOPER IS ALSO RESPONSIBLE FOR BARRICADING DURING THIS TIME.

18. THE DEVELOPER AND/OR CONTRACTOR SHALL CONTACT THE STREET DIVISION (787-7251) TO PICK UP ANY EXISTING STD. 180 BARRICADES THAT ARE BEING REMOVED. THE CITY'S INSPECTOR WILL MADE THE FINAL DETERMINATION ON WHETHER A BARRICADE CAN BE RELOCATED.

19. *CONST. 6' BLOCK WALL PER S/R STD. 704. TYPE/COLOR OF BLOCK: ORCO LA PAZ (OR EQUAL). MORTAR: COLOR TO MATCH. BLOCK SIZE: 6" x 6" x 18". TYPE/COLOR OF CAP: 6" x 6" x 18" "POR CAP" ORCO MISSION" (OR EQUAL) PLACE PILASTERS AS SHOWN ON SHEET 2 @ 60' CENTERS PER DETAIL ON SHT. 2 USE ORCO MISSION (OR EQUAL) W/ MATCHING MORTAR.*

20. *ELECTRICAL UNDERGROUND FACILITIES TO BE INSTALLED BY THE DEVELOPER AFTER CONSTRUCTION OF CURB & GUTTER BUT PRIOR TO PLACEMENT OF CROSSING GUTTER, SPANDRELS, SIDEWALK, & PAVING.*

21. THE DEVELOPER IS RESPONSIBLE FOR PROVIDING ACCESS PAVING. SHOULD THE DEVELOPER AND/OR CONTRACTOR DECIDE TO INSTALL THE ACCESS PAVING PRIOR TO THE CITY COMMENCING ITS PAVING WORK, THE DEVELOPER SHALL COORDINATE HIS INSTALLATION OF ACCESS PAVING ON CANYON CREST DR. WITH THE CITY INSPECTOR. FINAL COURSE OF PAVING IN ACCESS AREA TO BE PAID FOR BY DEVELOPER PRIOR TO THE CITY COMMENCING ITS PAVING OPERATION. DEVELOPER WILL ALSO INSTALL TYPE F-1 FLEXIBLE DELINEATORS AT 20' ON CENTER ON OUTGOING TAPER.

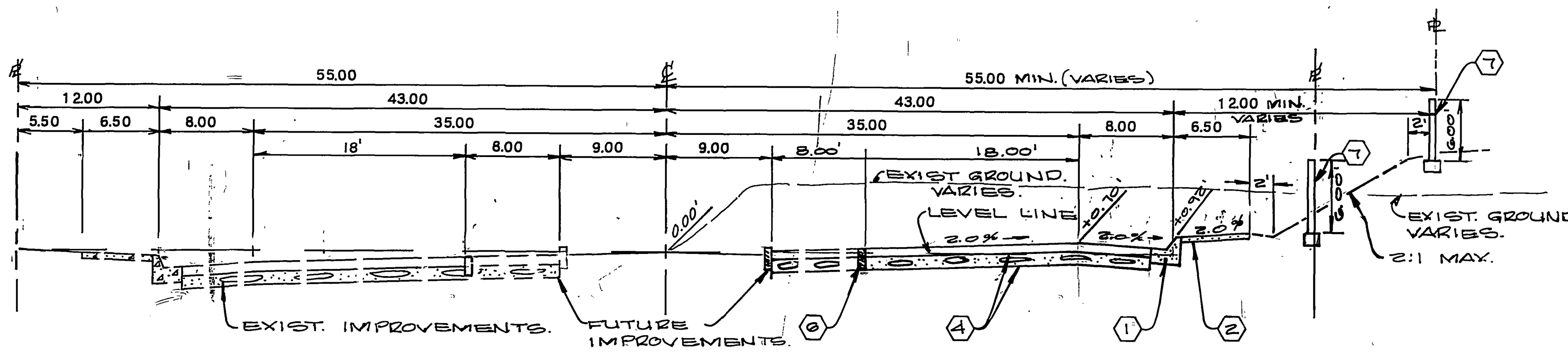


NOTE: PAVING AND BASE BY THE CITY GRADING BY THE DEVELOPER.

TYPICAL SECTION
NO SCALE

CANYON CREST DR.
TI.= 8

| STREET SIGN SCHEDULE | | BLK. No |
|---|---|---|
| (A) | CANYON CREST DR. | 6700 |
| | WILDING PL. | 6900 |
| (B) | WILDING PL. | 6900 |
| | NORTHRIDGE DR. | 6700 |
| (C) | WILDING PL. | 6900 |
| | GREYSTONE DR. | 1100 |
| (D) | WILPING PL. | 6900 |
| | BASILONE DR. | 1000 |
| (E) | WILDING PL. | 6900 |
| | SEISER CT. | 6900 |
| (F) | R-1- STOP SIGN 36"X36" OCTAGON | |

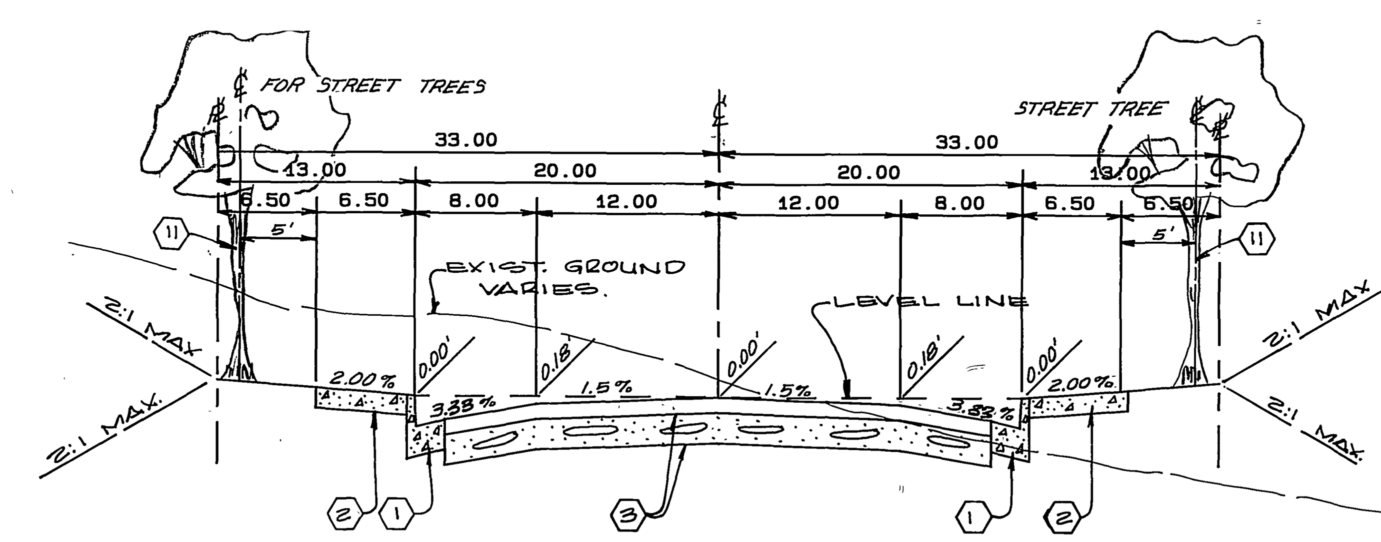


TYPICAL SECTION
NO SCALE

WILDING PL.
TI.= 5

## CONSTRUCTION NOTES

(1) *CONST. STANDARD 200, CURB & GUTTER; 6" C.F.*

(2) *CONST. STANDARD 325, CURBLINE SIDEWALK.*

△1 (3) *CONST. 2½" A.C. PAVING OVER 4" CRUSHED AGGREGATE OR 2½" A.C. OVER COMPACTED NATIVE.* PER S.R. 1282, R= 74

△1 (4) *CONST. 3½" A.C. PAVING OVER 4" CRUSHED AGGREGATE OR 4" A.C. OVER COMPACTED NATIVE.* PER S.R. 1282, R= 74.

(5) RELOCATE STD. 180 BARRICADE SEE NOTE 18.

(6) *INSTALL 2" X 4" REDWOOD HEADER.*

(7) *CONST. STANDARD 704 BLOCK WALL (THIS WALL REQUIRES A PERMIT & INSPECTION FROM THE PUBLIC WORKS ENGINEERING DIVISION. SEE GENERAL NOTE 19 FOR MATERIAL AND COLOR of THE 6' & 3' BLOCK WALL*

(8) *CONST. STANDARD 220, 6' WIDE CROSS GUTTER.*

(9) *CONST. STANDARD 304, WHEELCHAIR RAMP.*

(10) CONST. STANDARD 180, BARRICADE

(11) PLANT STREET TREES TO THE SPECIFICATIONS OF THE PARK AND RECREATION DEPARTMENT.

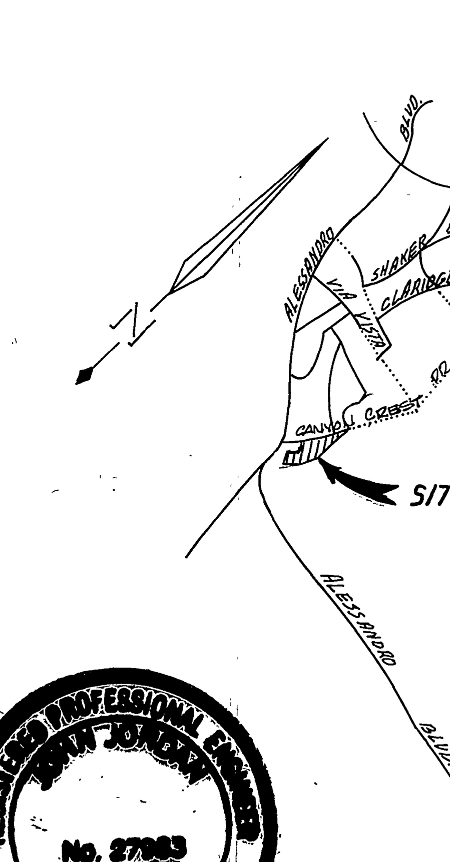


LOCATION MAP
NO SCALE

REGISTERED PROFESSIONAL ENGINEER
No. 27983
EXP. 3-31-90
CIVIL
STATE OF CALIFORNIA

## NOTICE TO CONTRACTOR

1. THE EXISTENCE AND LOCATION OF ANY UNDERGROUND UTILITY PIPES OR STRUCTURES SHOWN ON THESE PLANS ARE OBTAINED BY A SEARCH OF THE AVAILABLE RECORDS. TO THE BEST OF OUR KNOWLEDGE, THERE ARE NO EXISTING UTILITIES EXCEPT THOSE SHOWN ON THESE PLANS.

2. THE CONTRACTOR IS REQUIRED TO TAKE DUE PRECAUTIONARY MEASURES TO PROTECT THE UTILITY LINES SHOWN AND ANY OTHER LINES NOT OF RECORD OR NOT SHOWN ON THESE PLANS.

3. CALL UNDERGROUND SERVICE ALERT (USA) 1-800-422-4133 AT LEAST 48 HOURS PRIOR TO EXCAVATION

BENCH MARK: THIS PLAN ONLY
FOUND 1 1/2" SQUARE ROD IN CONCRETE, IN WELL 200' SLY OF VIA VISTA DRIVE ON ALESSANDRO BLVD. CITY OF RIVERSIDE BENCH MARK F-7A. ELEVATION 1337.423 (CITY). TAKEN AS ELEVATION 1337.90 FOR THESE PLANS, TO TIE TO PLANS IN ADJACENT SUBDIVISION.

ALBERT A. WEBB ASSOCIATES
CIVIL ENGINEERS
3788 McCRAY STREET
RIVERSIDE, CALIFORNIA
(714) 686-1070
APPROVED BY [signature] DATE 2-4-86
R.E. No. 27983
W.O. 84-178 FOR: CONCORDIA DEV. F.B. 1041

| MARK | REVISIONS | APPR. | DATE |
|---|---|---|---|
| △1 | ADDED STRUCTURAL SECTION (S.R. 1282) | RH | 5-30-86 |

DESIGNED BY RLT DRAWN BY TAG CHECKED BY RLT

CITY OF RIVERSIDE, CALIFORNIA
PUBLIC WORKS DEPARTMENT

| APPROVED BY | BY | DATE |
|---|---|---|
| PRINCIPAL ENGINEER | [signature] | 5-13-86 |
| PARK DEPARTMENT | 98 | 4-11-86 |
| TRAFFIC DIVISION | | |
| CHIEF PUB. WKS. ENGR. | | 5/14/86 |
| PLANNING | CD | 4-17 |

APPROVED BY William D. Gardner
DIRECTOR OF PUBLIC WORKS
DATE 5-19-86

*As built 2-19-87 TG

STREET PLAN & PROFILE
TRACT 9078
INDEX
SCALE: NO SCALE

INDEXED C.S.
ACCOUNT No.
DRAWING NUMBER
R-2769
SHEET 1 OF 6
84-178 A

PO 1914

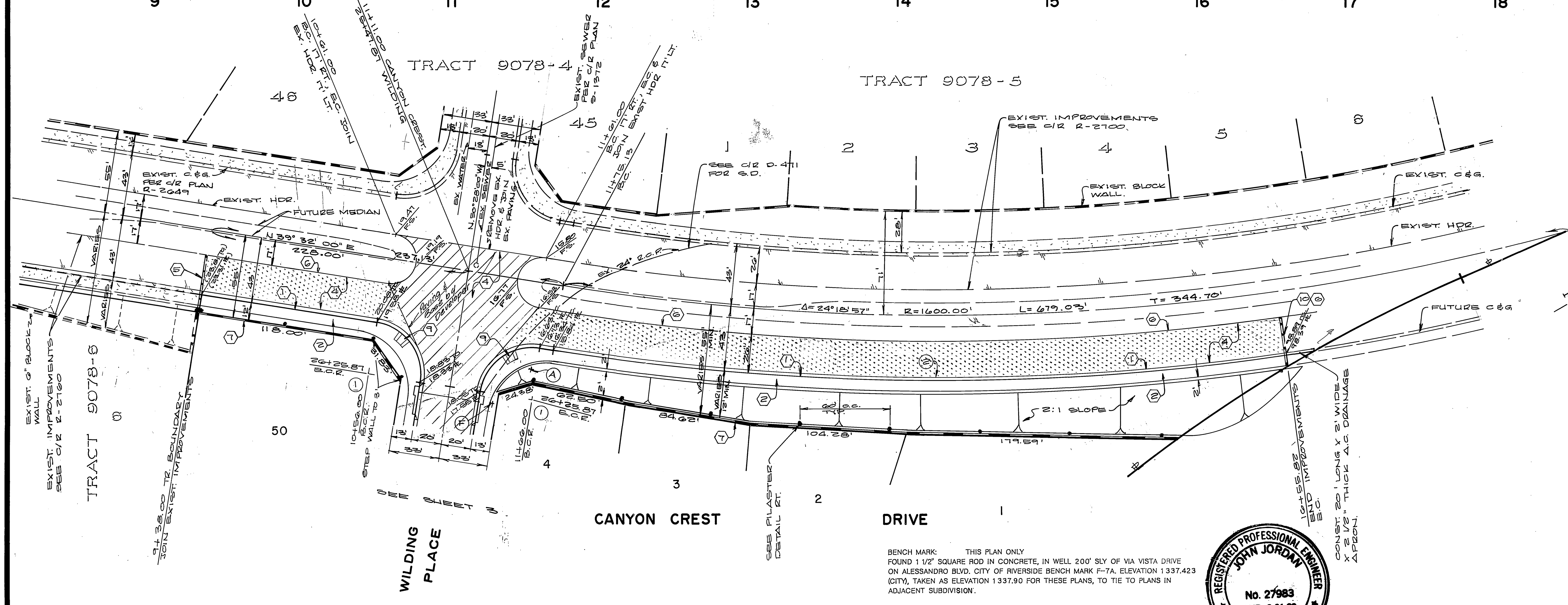


## PROFILE LEGEND

- (A) EXIST. GRADE @ ℄
- (B) TOP OF HEADER 17' RT.
- (C) 1/4 CROWN LINE 35' RT.
- (D) TOP OF CURB 43' RT. (6" C.F.)
- (E) EXIST. TOP OF CURB 43' RT. (6" C.F.)
- (F) EXIST. 1/4 CROWN LINE 35' RT.
- (G) EXIST. TOP OF HEADER 17' RT.

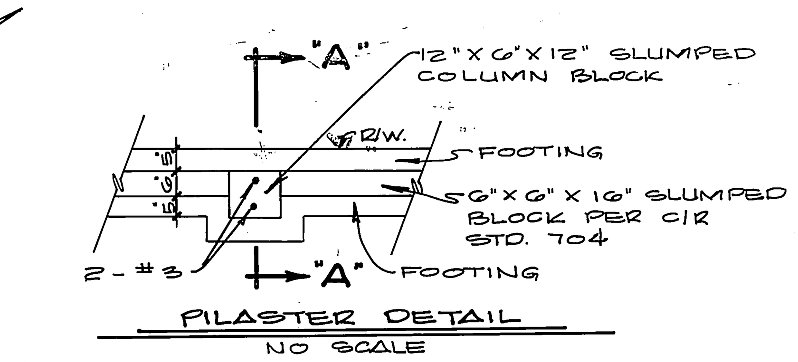


PILASTER DETAIL
NO SCALE

NOTE: FOR INFO. NOT SHOWN REFER TO C/R STD. 704. SEE GENERAL NOTE No. 20 FOR MATERIAL & COLOR OF THE PILASTERS.

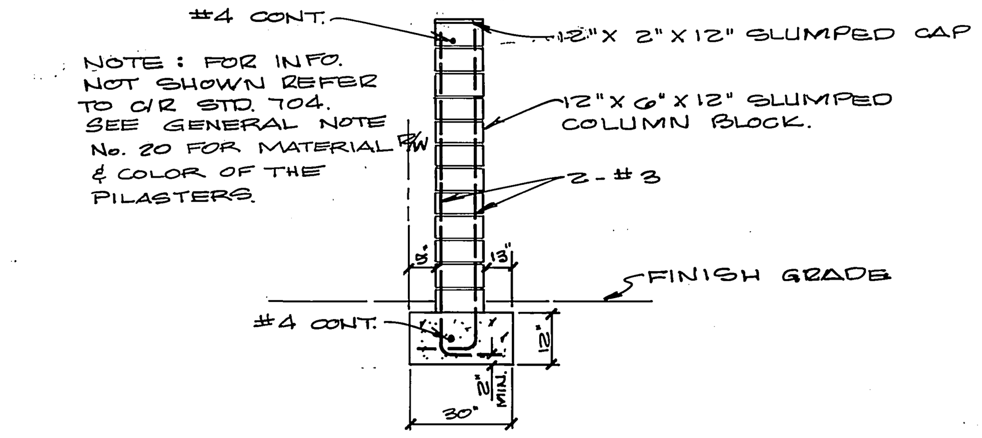


SECTION "A"-"A"
NO SCALE

BENCH MARK: THIS PLAN ONLY
FOUND 1 1/2" SQUARE ROD IN CONCRETE, IN WELL 200' SLY OF VIA VISTA DRIVE ON ALESSANDRO BLVD. CITY OF RIVERSIDE BENCH MARK F-7A. ELEVATION 1337.423 (CITY), TAKEN AS ELEVATION 1337.90 FOR THESE PLANS, TO TIE TO PLANS IN ADJACENT SUBDIVISION.

CURVE DATA

| NO. | Δ | R. | L. | T. |
|---|---|---|---|---|
| 1 | 90°00'00" | 35.00' | 54.98' | 35.00' |
| 2 | 17°12'48" | 1643.00' | 493.61' | 248.68' |

REGISTERED PROFESSIONAL ENGINEER JOHN JORDAN No. 27983 EXP. 3-31-90 CIVIL STATE OF CALIFORNIA

ALBERT A. WEBB ASSOCIATES
(714) 686-1070
CIVIL ENGINEERS
3788 McCRAY
RIVERSIDE, CALIFORNIA
APPROVED BY [signature] DATE 2-4-86
R.E. No. 27983
W.O. 84-178 FOR: CONCORDIA DEV. HOMES F.B. 1041

| MARK | REVISIONS | APPR. | DATE |
|---|---|---|---|

DESIGNED BY RLT DRAWN BY RLP CHECKED BY RLT

CITY OF RIVERSIDE, CALIFORNIA
PUBLIC WORKS DEPARTMENT

| APPROVED BY | BY | DATE |
|---|---|---|
| PRINCIPAL ENGINEER | [initials] | 4/14/86 |
| PARK DEPARTMENT | GB | 4-1-86 |
| TRAFFIC DIVISION | Bam | 5-13-86 |
| ~~CHIEF~~ PUB. WKS. ENGR. | [initials] | 5/16/86 |
| PLANNING | CD | 4-17 |

APPROVED BY William D. Gardner
DIRECTOR OF PUBLIC WORKS
DATE 5-19-86

*As built 2-19-87

# TRACT NO. 9078
## STREET PLANS & PROFILE
CANYON CREST DRIVE

SCALE: 1" = 40' Horz. 1" = 8' Vert.

INDEXED C.S.
ACCOUNT No.
DRAWING NUMBER
R-2769
SHEET 2 OF 6
84-178-A

PC 1914

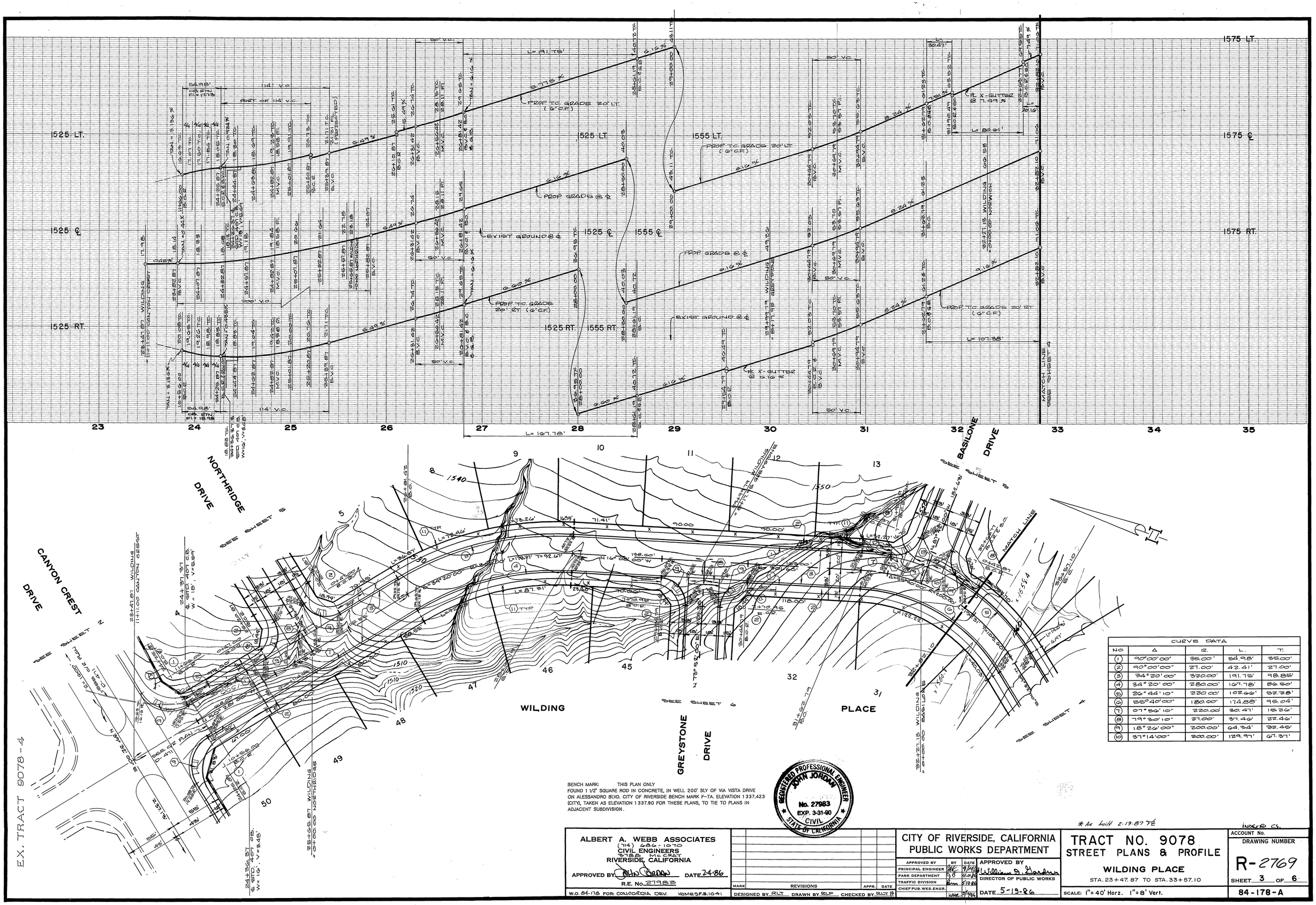


| CURVE DATA | | | | |
|---|---|---|---|---|
| NO. | Δ | R. | L. | T. |
| 1 | 90°00'00" | 35.00' | 54.98' | 35.00' |
| 2 | 90°00'00" | 27.00' | 42.41' | 27.00' |
| 3 | 34°20'00" | 320.00' | 191.75' | 98.85' |
| 4 | 34°20'00" | 280.00' | 167.78' | 86.50' |
| 5 | 26°44'10" | 220.00' | 102.66' | 52.28' |
| 6 | 55°40'00" | 180.00' | 174.88' | 95.04' |
| 7 | 07°56'10" | 220.00' | 30.47' | 15.26' |
| 8 | 79°30'10" | 27.00' | 37.46' | 22.46' |
| 9 | 18°26'00" | 200.00' | 64.34' | 32.45' |
| 10 | 37°14'00" | 200.00' | 129.97' | 67.37' |

BENCH MARK: THIS PLAN ONLY
FOUND 1 1/2" SQUARE ROD IN CONCRETE, IN WELL 200' SLY OF VIA VISTA DRIVE ON ALESSANDRO BLVD. CITY OF RIVERSIDE BENCH MARK F-7A. ELEVATION 1337.423 (CITY), TAKEN AS ELEVATION 1337.90 FOR THESE PLANS, TO TIE TO PLANS IN ADJACENT SUBDIVISION.

REGISTERED PROFESSIONAL ENGINEER JOHN JORDAN No. 27983 EXP. 3-31-90 CIVIL STATE OF CALIFORNIA

* As built 2-19-87 TE

INDEXED CS.

ALBERT A. WEBB ASSOCIATES
(714) 686-1070
3788 McCRAY
RIVERSIDE, CALIFORNIA
APPROVED BY John Jordan DATE 2-4-86
R.E. No. 27983
W.O. 84-178 FOR: CONCORDIA DEV. HOMES F.B. 1041

| MARK | REVISIONS | APPR. | DATE |
|---|---|---|---|

DESIGNED BY RLT DRAWN BY RLP CHECKED BY RLT

CITY OF RIVERSIDE, CALIFORNIA
PUBLIC WORKS DEPARTMENT

| APPROVED BY | BY | DATE |
|---|---|---|
| PRINCIPAL ENGINEER | [illegible] | 9/14/78 |
| PARK DEPARTMENT | [illegible] | 4-11-86 |
| TRAFFIC DIVISION | [illegible] | 5-13-86 |
| CHIEF PUB. WKS. ENGR. | [illegible] | 5/14/86 |

APPROVED BY William D. Gardner
DIRECTOR OF PUBLIC WORKS
DATE 5-19-86

# TRACT NO. 9078
## STREET PLANS & PROFILE
### WILDING PLACE
STA. 23+47.87 TO STA. 33+57.10

SCALE: 1" = 40' Horz. 1" = 8' Vert.

ACCOUNT No.
DRAWING NUMBER
R-2769
SHEET 3 OF 6
84-178-A

PC 1914

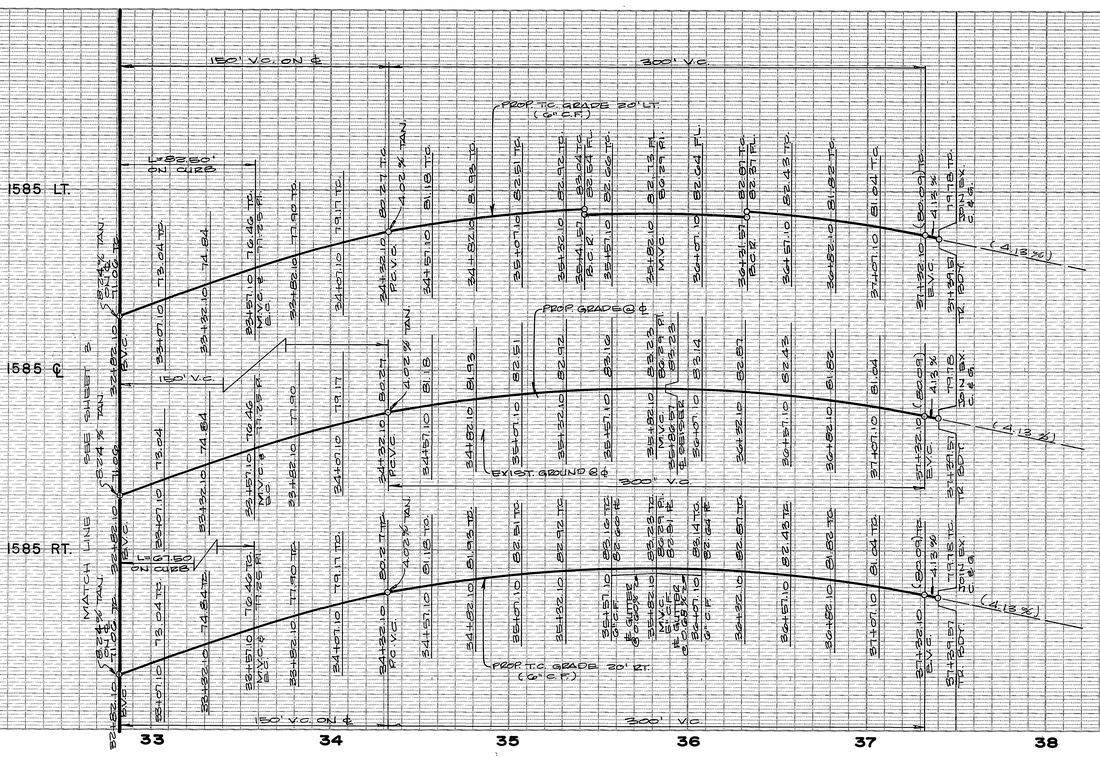


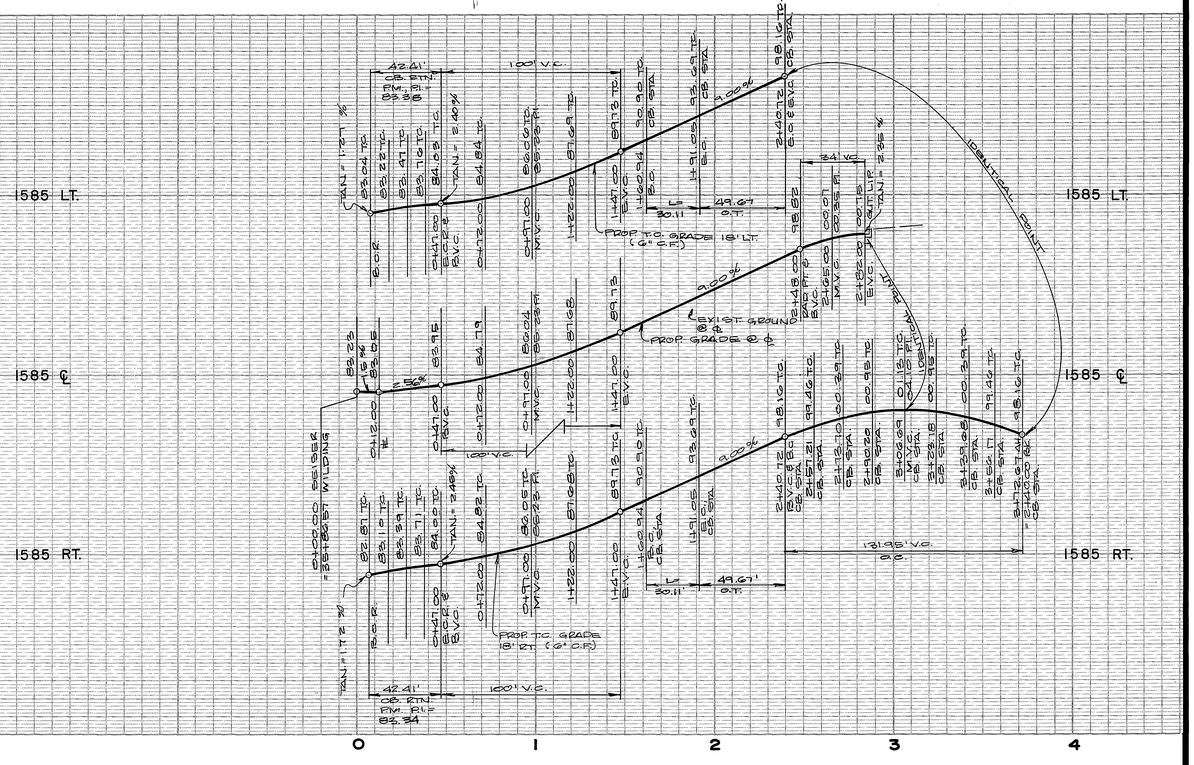


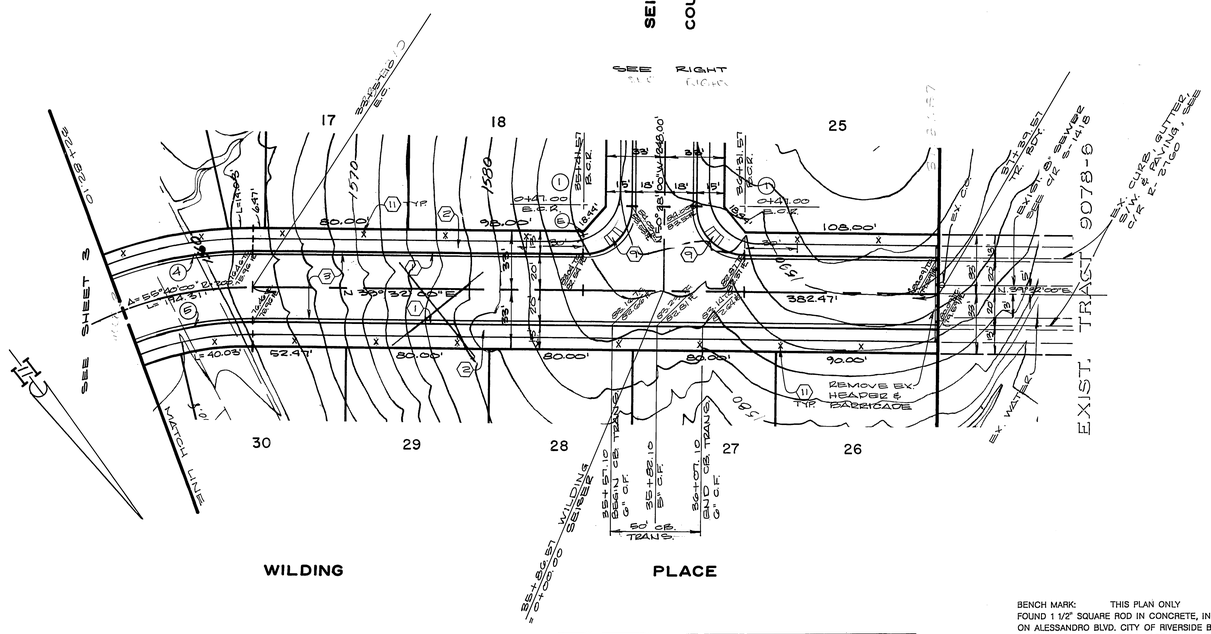


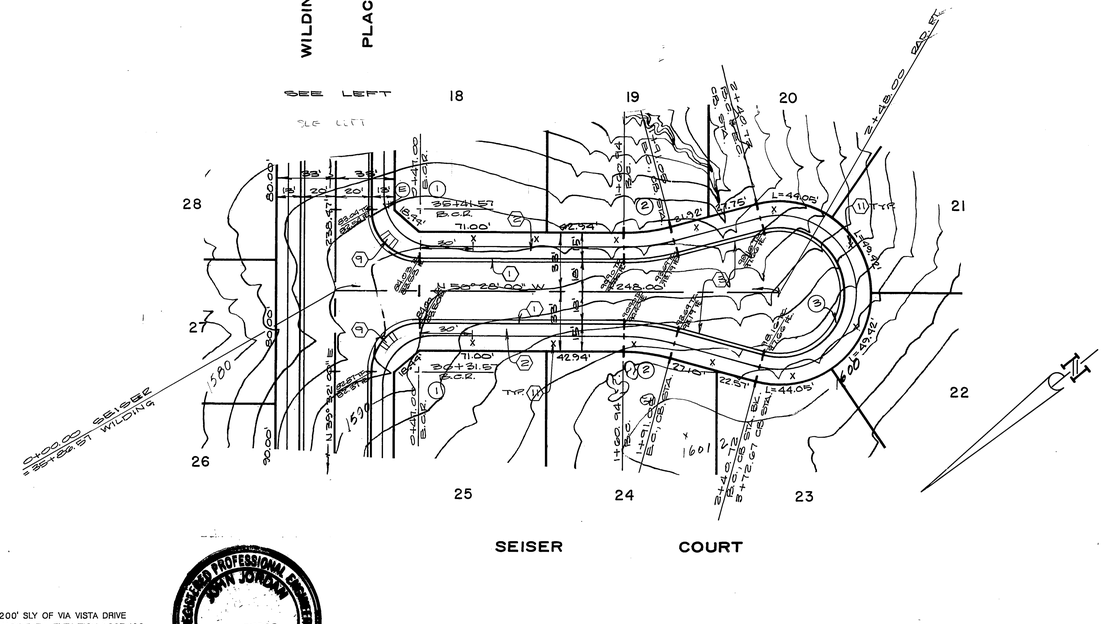


| CURVE DATA | | | | |
|---|---|---|---|---|
| NO. | Δ | R. | L. | T. |
| 1 | 90°00'00" | 27.00' | 42.41' | 27.00' |
| 2 | 15°00'00" | 115.00' | 30.11' | 15.14' |
| 3 | 210°00'00" | 36.00' | 131.95' | — |
| 4 | 28°48'10" | 220.00' | 102.66' | 52.28' |
| 5 | 56°40'00" | 180.00' | 174.88' | 95.04' |

BENCH MARK: THIS PLAN ONLY
FOUND 1 1/2" SQUARE ROD IN CONCRETE, IN WELL 200' SLY OF VIA VISTA DRIVE ON ALESSANDRO BLVD. CITY OF RIVERSIDE BENCH MARK F-7A ELEVATION 1337.423 (CITY), TAKEN AS ELEVATION 1337.90 FOR THESE PLANS, TO TIE TO PLANS IN ADJACENT SUBDIVISION.

REGISTERED PROFESSIONAL ENGINEER JOHN JORDAN No. 27983 EXP. 3-31-90 CIVIL STATE OF CALIFORNIA

* As built 2-19-87 TE

ALBERT A. WEBB ASSOCIATES
(714) 686-1070
CIVIL ENGINEERS
3788 McCRAY
RIVERSIDE, CALIFORNIA
APPROVED BY [illegible] DATE 2-4-86
R.E. No. 27983
W.O. 84-178 FOR: CONCORDIA DEV. HOMES F.B. 1041

MARK | REVISIONS | APPR. | DATE

DESIGNED BY RLT DRAWN BY RLP CHECKED BY RLT

CITY OF RIVERSIDE, CALIFORNIA
PUBLIC WORKS DEPARTMENT

| APPROVED BY | BY | DATE |
|---|---|---|
| PRINCIPAL ENGINEER | [illegible] | 4-21-86 |
| PARK DEPARTMENT | [illegible] | 4-14-86 |
| TRAFFIC DIVISION | [illegible] | 5-12-86 |
| CHIEF PUB. WKS. ENGR. | [illegible] | 5-19-86 |

APPROVED BY
William D. Gardner
DIRECTOR OF PUBLIC WORKS
DATE 5-19-86

# TRACT NO. 9078
## STREET PLANS & PROFILE
## SEISER COURT
## WILDING PLACE

SCALE: 1"= 40' Horz. 1"= 8' Vert.

INDEXED C.S.
ACCOUNT No.
DRAWING NUMBER
R-2769
SHEET 4 OF 6
84-178-A

PC 19-14

1520 LT.

1520 ℄

1520 RT.

1565 LT.

1565 ℄

1565 RT.

1550

0 1 2 3 4

0 1 2

SEE SHEET 3

SEE SHEET 3

SEE SHEET 3

NORTHRIDGE DRIVE

BASILONE DRIVE

WILDING PLACE

WILDING PLACE

| CURVE DATA | | | | |
|---|---|---|---|---|
| NO | Δ | R | L. | T. |
| ① | 90°00'00" | 27.00' | 42.41' | 27.00' |
| ② | 8°43'47" | 1832.00' | 279.74' | 140.14 |
| ③ | 9°46'40" | 1800.00' | 307.18' | 153.96 |
| ④ | 79°30'10" | 27.00' | 37.46' | 22.46' |

BENCH MARK: THIS PLAN ONLY
FOUND 1 1/2" SQUARE ROD IN CONCRETE, IN WELL 200' SLY OF VIA VISTA DRIVE ON ALESSANDRO BLVD. CITY OF RIVERSIDE BENCH MARK F-7A. ELEVATION 1337.423 (CITY), TAKEN AS ELEVATION 1337.90 FOR THESE PLANS, TO TIE TO PLANS IN ADJACENT SUBDIVISION.

REGISTERED PROFESSIONAL ENGINEER JOHN JORDAN No. 27983 EXP. 3-31-90 CIVIL STATE OF CALIFORNIA

ALBERT A. WEBB ASSOCIATES
(714) 684-1070
CIVIL ENGINEERS
3788 McCRAY
RIVERSIDE, CALIFORNIA
APPROVED BY: [signature] DATE 2-9-86
R.E. No. 21988
W.O. 84-178 FOR: CONCORDIA DEV. HOMES F.B. 1041

| MARK | REVISIONS | APPR. | DATE |
|---|---|---|---|
| | | | |

DESIGNED BY RLT DRAWN BY RLP CHECKED BY RLT

CITY OF RIVERSIDE, CALIFORNIA
PUBLIC WORKS DEPARTMENT

| | BY | DATE |
|---|---|---|
| APPROVED BY | | |
| PRINCIPAL ENGINEER | [signature] | 5/16/86 |
| PARK DEPARTMENT | [signature] | 5/16/86 |
| TRAFFIC DIVISION | [signature] | 5/19/86 |
| CHIEF PUB. WKS. ENGR. | [signature] | 5/19/86 |

APPROVED BY [signature] DIRECTOR OF PUBLIC WORKS
DATE 5-19-86

* As built 2-19-87 JE

# TRACT NO. 9078
## STREET PLANS & PROFILE
### BASILONE DRIVE
### NORTHRIDGE DRIVE

SCALE: 1"= 40' Horz. 1"= 8' Vert.

INDEXED C.S.
ACCOUNT No.
DRAWING NUMBER
R-2769
SHEET 5 OF 6
84-178-A

PC 1914

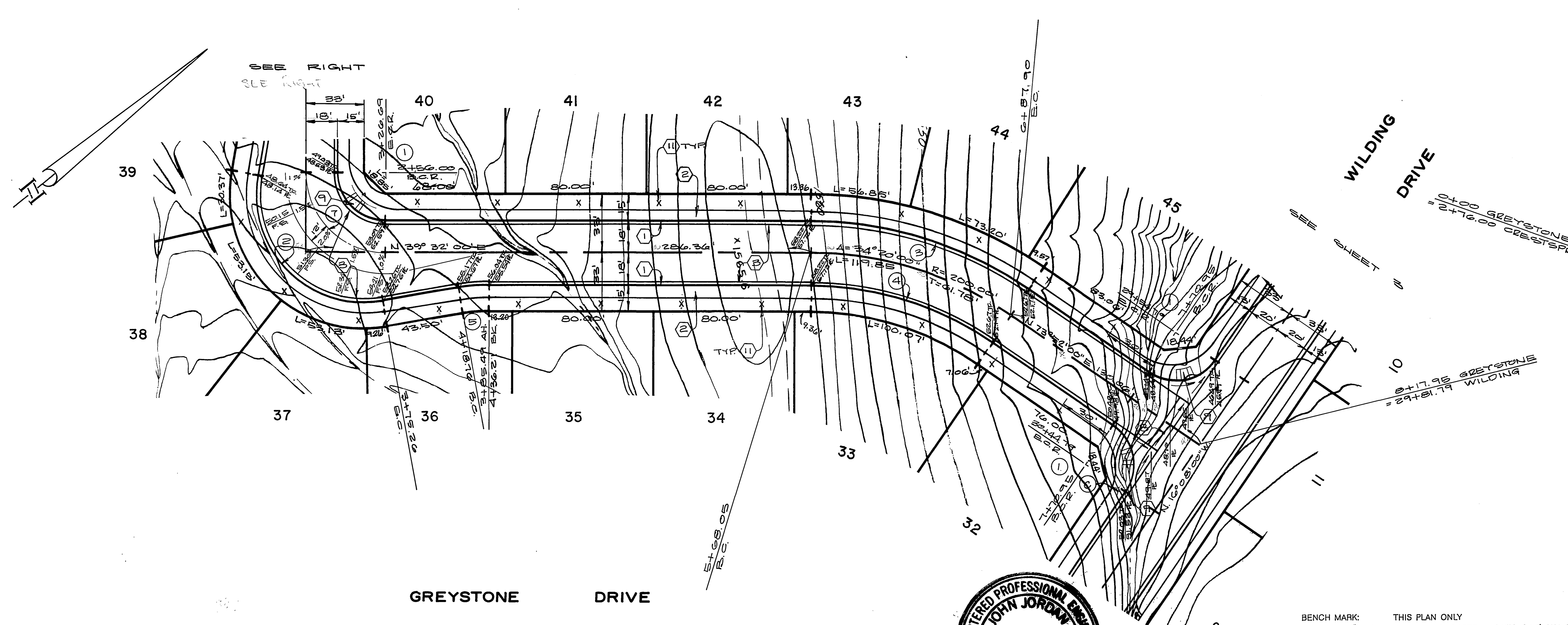


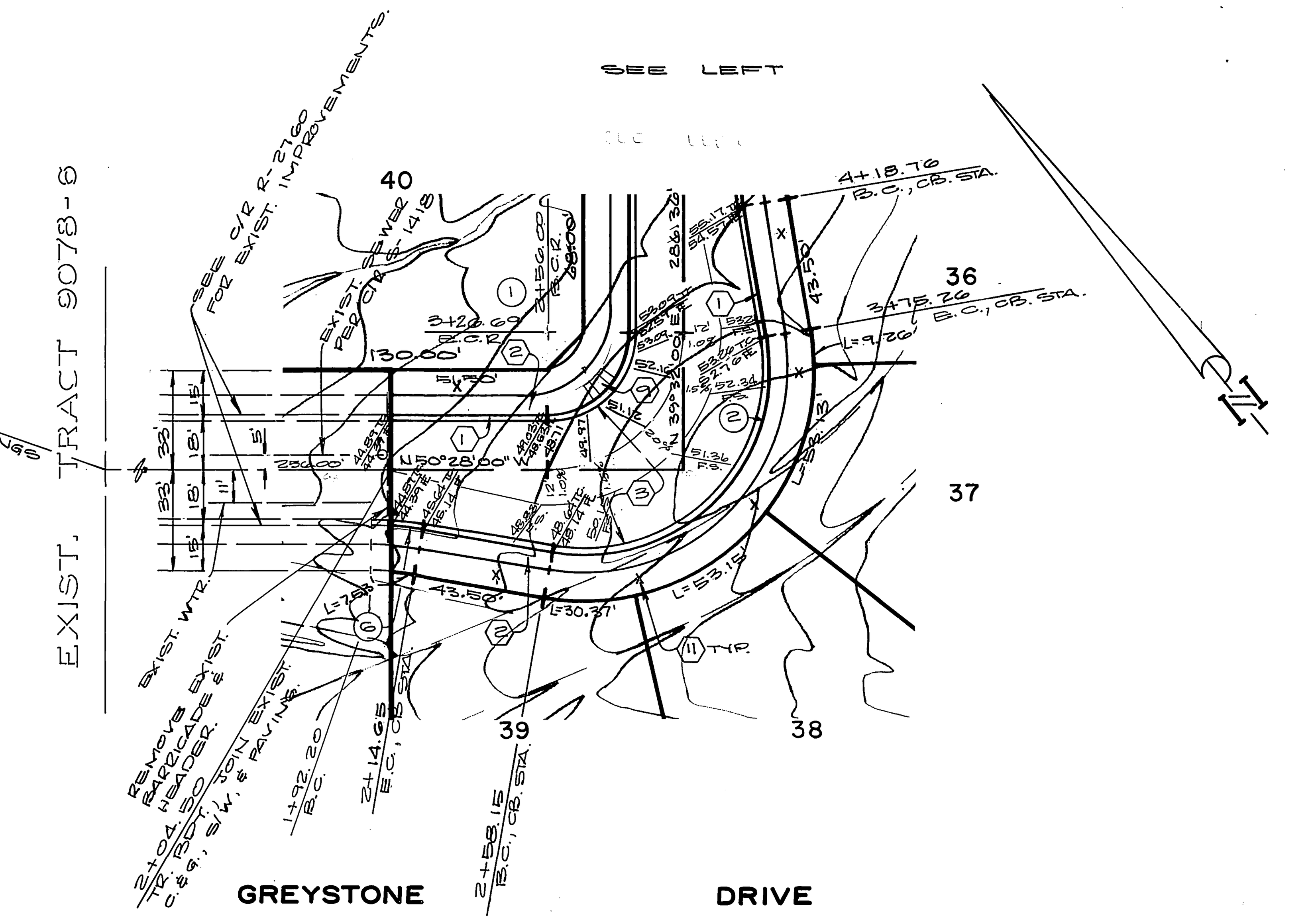


| CURVE DATA | | | | |
|---|---|---|---|---|
| NO. | Δ | R. | L. | T. |
| 1 | 90°00'00" | 27.00' | 42.41' | 27.00' |
| 2 | 110°00'00" | 61.00' | 117.11' | 87.12' |
| 3 | 34°20'00" | 218.00' | 130.63' | 67.34' |
| 4 | 34°20'00" | 182.00' | 109.06' | 56.22' |
| 5 | 10°00'00" | 100.00' | 17.45' | 8.75' |
| 6 | 5°48'52" | 100.00' | 10.14' | 5.07' |
| 7 | 90°00'00" | 45.00' | 70.69' | 45.00' |

BENCH MARK: THIS PLAN ONLY
FOUND 1 1/2" SQUARE ROD IN CONCRETE, IN WELL 200' SLY OF VIA VISTA DRIVE ON ALESSANDRO BLVD. CITY OF RIVERSIDE BENCH MARK F-7A. ELEVATION 1337.423 (CITY), TAKEN AS ELEVATION 1337.90 FOR THESE PLANS, TO TIE TO PLANS IN ADJACENT SUBDIVISION.

REGISTERED PROFESSIONAL ENGINEER — JOHN JORDAN — No. 27983 — EXP. 3-31-90 — CIVIL — STATE OF CALIFORNIA

ALBERT A. WEBB ASSOCIATES
(714) 686-1070
CIVIL ENGINEERS
3788 McCRAY
RIVERSIDE, CALIFORNIA

APPROVED BY [signature] DATE 2-4-86
R.E. No. 27983

W.O. 84-178 FOR: CONCORDIA DEV. HOMES F.B. 1041

| MARK | REVISIONS | APPR. | DATE |
|---|---|---|---|
| | | | |

DESIGNED BY RLT DRAWN BY RLP CHECKED BY RLT

# CITY OF RIVERSIDE, CALIFORNIA
## PUBLIC WORKS DEPARTMENT

| APPROVED BY | BY | DATE |
|---|---|---|
| PRINCIPAL ENGINEER | [initials] | 4/14/86 |
| PARK DEPARTMENT | [initials] | 4-11-86 |
| TRAFFIC DIVISION | [initials] | 5-13-86 |
| CHIEF PUB. WKS. ENGR. | [initials] | 5/16/86 |

APPROVED BY William D. Gardner
DIRECTOR OF PUBLIC WORKS
DATE 5-19-86

* As built 2-19-87 [initials]

# TRACT NO. 9078
## STREET PLANS & PROFILE
### GREYSTONE DRIVE

SCALE: 1"= 40' Horz. 1"= 8' Vert.

INDEXED C.S.
ACCOUNT No.
DRAWING NUMBER
R-2769
SHEET 6 OF 6
84-178-A

PC 1914