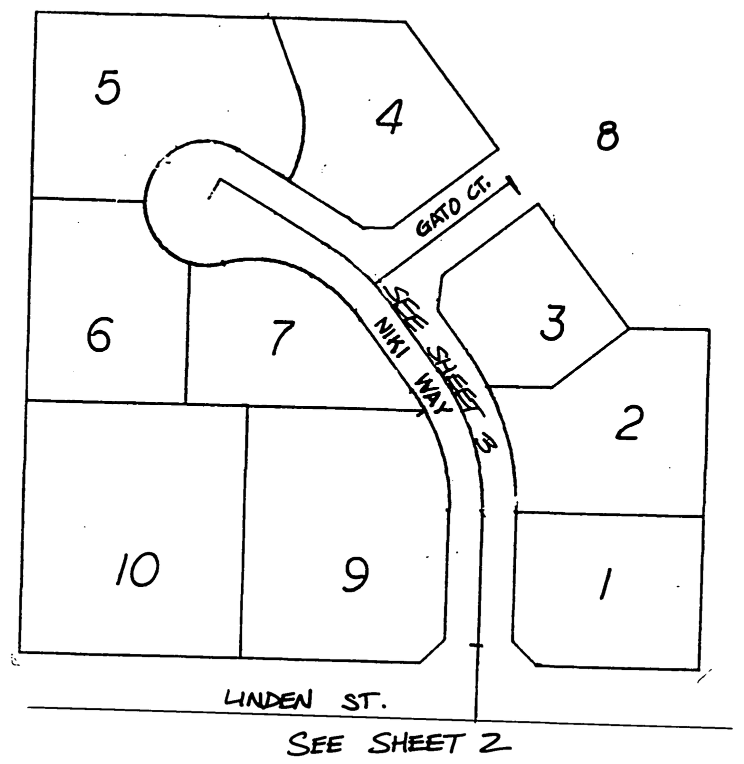

SEE SHEET 2

INDEX MAP

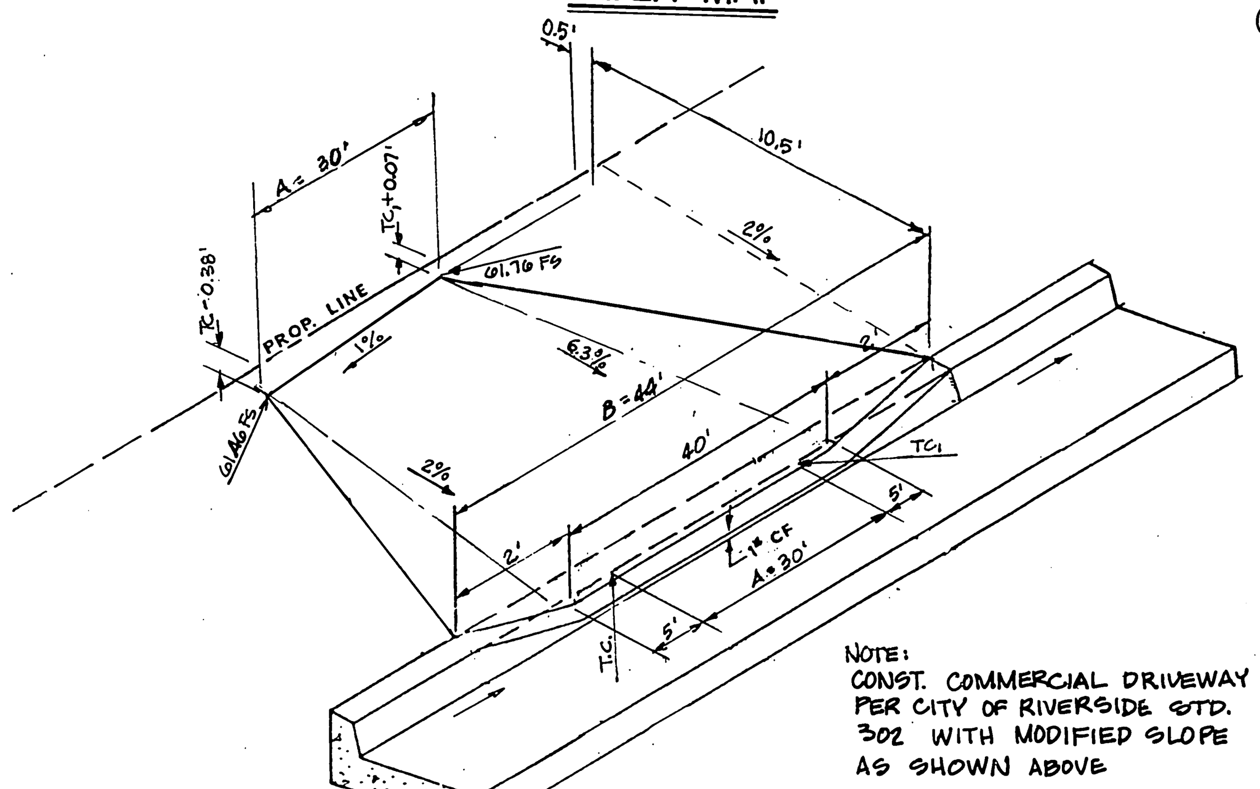

NOTE:
CONST. COMMERCIAL DRIVEWAY PER CITY OF RIVERSIDE STD. 302 WITH MODIFIED SLOPE AS SHOWN ABOVE

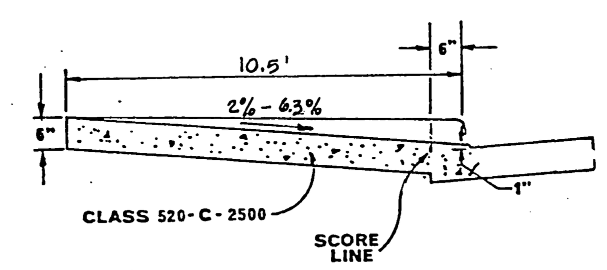

COMMERCIAL DRIVEWAY APPROACH ⑫

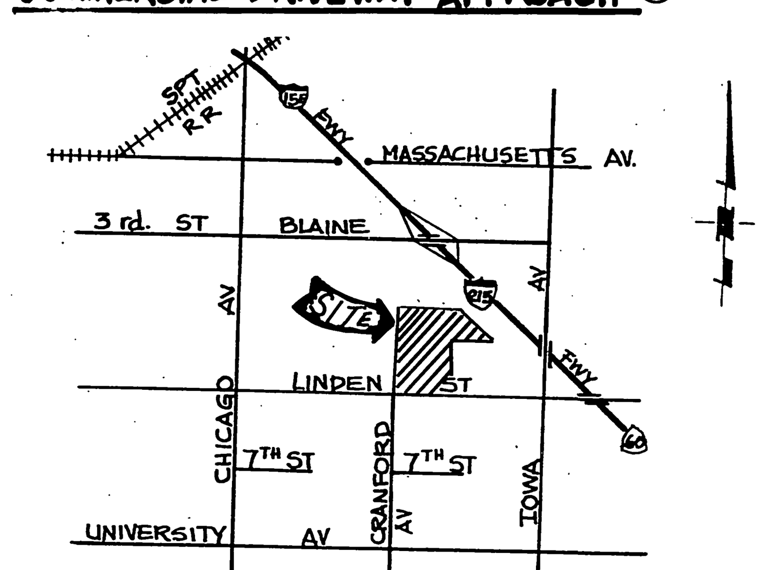

VICINITY MAP N.T.S.

CONSTRUCTION NOTES AND QUANTITY ESTIMATES

⚠2 ①	CONSTRUCT A.C. PAVEMENT 3 "A.C. OVER 4 "C.A.B. PER S.R. 1323; R-VALUE = 72.	44,585 SF
②	CONSTRUCT 8" CURB AND GUTTER PER CITY OF RIVERSIDE STD. 200	1279 LF
③	CONSTRUCT 6" CURB AND GUTTER PER CITY OF RIVERSIDE STD. 200	95 LF
④	CONSTRUCT 5' CONCRETE SIDEWALK PER CITY OF RIVERSIDE STD. 325	3120 SF
⑤	CONSTRUCT CROSS GUTTER PER CITY OF RIVERSIDE STD. 220	878 SF
⑥	CONSTRUCT COMMERCIAL DRIVEWAY APPROACH PER CITY OF RIVERSIDE STD. 302 ; A = 30 ; B = 44'	1628 SF
⑦	CONSTRUCT WHEELCHAIR RAMP PER CITY OF RIVERSIDE STD. 304	480 SF
⚠1 ⑧	~~CONSTRUCT CATCH BASIN PER CITY OF RIVERSIDE STD. 405 W = 10' ; V = 5'~~	~~1 EA~~
⑨	CONSTRUCT CATCH BASIN PER CITY OF RIVERSIDE STD. 405 W = 8 ; V = 4'	2 EA.
⑩	CONSTRUCT VARIABLE THICKNESS A.C. OVERLAY	5230 SF
⑪	CONSTRUCT WHEELCHAIR RAMP PER DETAIL SHEET 2, AND CITY OF RIVERSIDE STD. 304	100 SF
⑫	CONSTRUCT COMMERCIAL DRIVEWAY APPROACH PER DETAIL HERE ON AND CITY OF RIVERSIDE STD. 302 ; A = 30' ; B = 44'	336 S.F.
⑬	PLANT STREET TREES TO THE SPECIFICATION OF THE PARK AND RECREATION DEPARTMENT.	

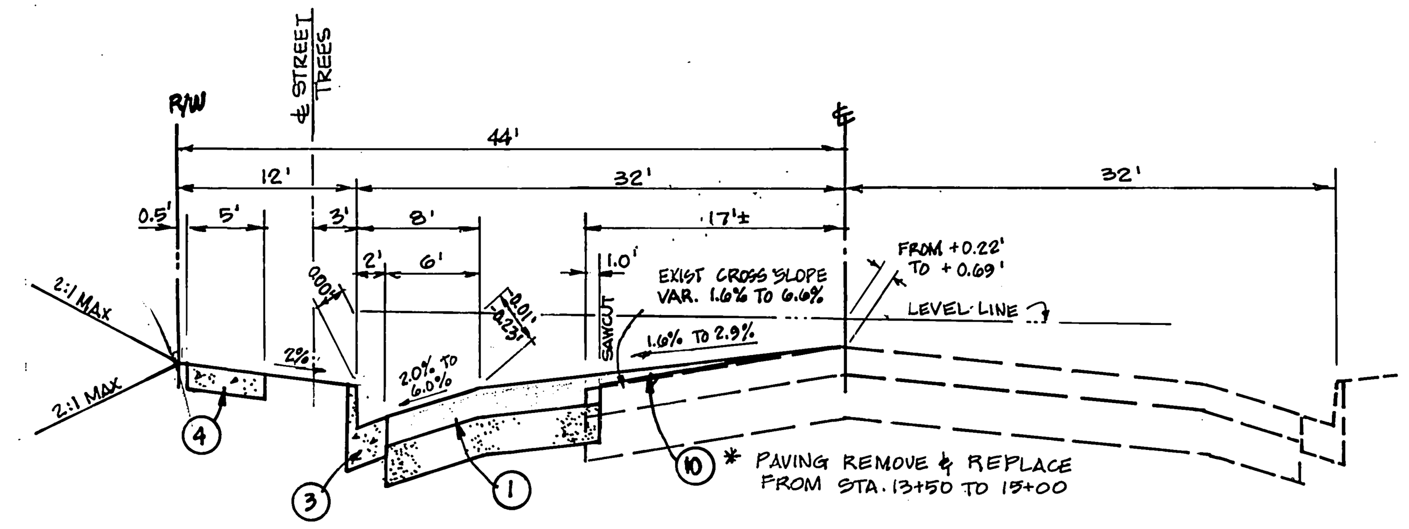

TYPICAL STREET SECTION
LINDEN STREET
T.I. = 7.0

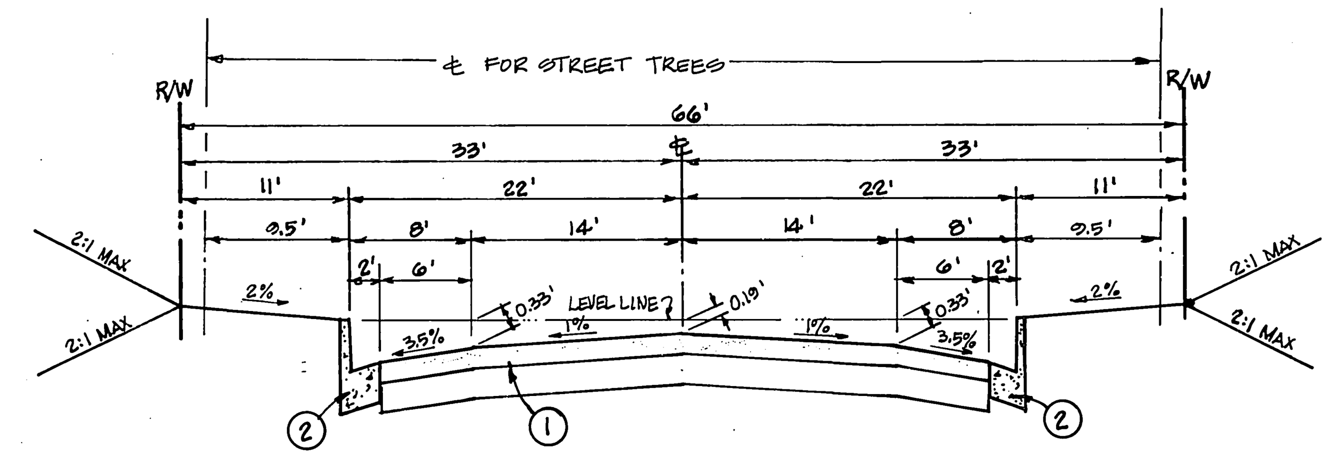

TYPICAL STREET SECTION
NIKI WAY
T.I. = 6.0

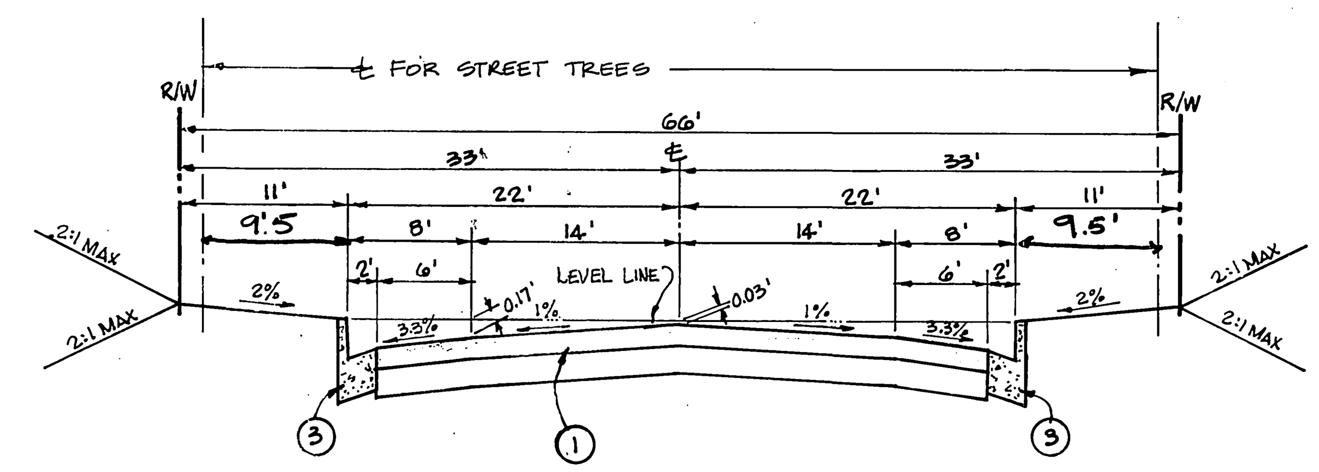

TYPICAL STREET SECTION
GATO COURT
T.I. = 6.0

LEGEND

A.C. PAVEMENT

A.C. OVERLAY

STREET NAME & TRAFFIC SIGN SCHEDULE		
Ⓐ	LINDEN STREET	1400
	NIKI WAY	3400
Ⓑ	NIKI WAY	3400
	GATO COURT	1400
Ⓒ	R-1 - 30"	STOP SIGN
Ⓓ	W53 - 30"	NOT A THROUGH STREET
Ⓔ	R-81	BIKE LANE
Ⓕ	R-26	NO PARKING

INSTALL PER STD'S 662A & 666

GENERAL NOTES:

1. IT SHALL BE THE RESPONSIBILITY OF THE CONTRACTOR TO CLEAR THE RIGHTS OF WAY IN ACCORDANCE WITH THE PROVISIONS OF LAW AS IT AFFECTS EACH UTILITY INCLUDING IRRIGATION LINES AND APPURTENANCES AND AT NO COST TO THE CITY.
2. CONSTRUCTION SHALL BE IN ACCORDANCE WITH THE CITY OF RIVERSIDE DEPARTMENT OF PUBLIC WORKS, STANDARD DRAWINGS, STANDARD DRAWING NO.10 AND THE STANDARD SPECIFICATIONS FOR PUBLIC WORKS CONSTRUCTION, CURRENT EDITION.
3. TRIM EDGES OF EXISTING PAVEMENT WHERE NEW PAVEMENT JOINS TO A SMOOTH STRAIGHT LINE. CONSTRUCT MATCH-UP PAVING AS SHOWN ON PLAN AND OVERLAY PAVING AS DIRECTED IN THE FIELD TO PRODUCE A SMOOTH SECTION.
4. FINAL STRIPING FOR TRAFFIC CONTROL AND/OR PAVEMENT MARKING TO BE RESPONSIBLITY OF DEVELOPER.
5. ANY TRAFFIC CONTROL STRIPING OBLITERATED AND/OR BADLY WORN DURING CONSTRUCTION SHALL BE RESTORED BY THE CONTRACTOR WITHIN FIVE DAYS AFTER NOTIFICATION FROM THE CITY INSPECTOR.
6. ALL FLAGGED ELEVATIONS SHALL BE STAKED IN THE FIELD BY THE PRIVATE ENGINEER.
7. ALL TRAFFIC SIGNS SHALL BE INSTALLED PRIOR TO OPENING THE STREET TO TRAFFIC.
8. THE PRIVATE ENGINEER SIGNING THESE PLANS IS RESPONSIBLE FOR ASSURING THE ACCURACY AND ACCEPTABILITY OF THE WORK HEREON. IN THE EVENT OF DISCREPANCIES ARISING DURING CONSTRUCTION, THE PRIVATE ENGINEER SHALL BE RESPONSIBLE FOR DETERMINING AN ACCEPTABLE SOLUTION AND REVISING THE PLANS FOR APPROVAL BY THE CITY.
9. NOTICE TO CONTRACTOR: THE EXISTENCE AND LOCATION OF ANY UNDERGROUND UTILITY PIPES OR STRUCTURES SHOWN ON THESE PLANS WERE OBTAINED BY A SEARCH OF THE AVAILABLE RECORDS. TO THE BEST OF OUR KNOWLEDGE THERE ARE NO EXISTING UTILITIES EXCEPT AS SHOWN ON THESE PLANS. THE CONTRACTOR IS REQUIRED TO TAKE PRECAUTIONARY MEASURES TO PROTECT THE UTILITY LINES SHOWN AND ANY OTHER LINES NOT OF RECORD OR NOT SHOWN ON THE PLANS.
10. QUANTITIES SHOWN ARE FOR INFORMATION ONLY AND THE CITY OF RIVERSIDE IS NOT RESPONSIBLE FOR THEIR ACCURACY.
11. THE DEVELOPER, SHALL BE RESPONSIBLE FOR PRESERVING OR RE-ESTABLISHING AND REFERENCING SURVEY MONUMENTS DESTROYED, DISTURBED OR BURIED AS A RESULT OF CONSTRUCTION SHOWN HEREON.
12. ON ALL AREAS WITHIN PUBLIC RIGHT OF WAY WHERE THE FILL IS ONE FOOT OR GREATER, A LETTER WILL BE REQUIRED FROM THE SOILS ENGINEER, CERTIFYING THE COMPACTION OF THE FILL BELOW SUBGRADE, PRIOR TO THE ISSUANCE OF THE CONSTRUCTION PERMIT/CUT SHEETS.
13. DEVELOPER TO GIVE CITY WATER DIVISION 5 WORKING DAYS WRITTEN NOTICE PRIOR TO START OF CONSTRUCTION AND TO ALLOW CITY TEN (10) WORKING DAYS FOR COMPLETION OF WORK ~~787-7611~~ → (351-6150)
14. CONSTRUCT DRIVEWAY APPROACHES PER STD DWG. 302. EXACT SIZE AND LOCATION AS SHOWN.
15. THE SUBDIVIDER SHALL ARRANGE FOR A SOIL TEST TO BE MADE BY A SOILS ENGINEER AFTER THE STREETS HAVE BEEN PREPARED TO ROUGH GRADE AND PRIOR TO CURB AND GUTTER CONSTRUCTION. DEPTH OF BASE MATERIAL AND A.C. PAVING SHALL BE DETERMINED BY THE CITY OF RIVERSIDE DESIGN STANDARDS AND TEST PROCEDURES.
16. Public Works and Park and Recreation Department permits are required prior to commencement of tree relocation and/or removal work. For all trees within the ultimate pavement area, backfill of all holes is to be inspected by the City for proper compaction.
17. THE CONTRACTOR SHALL CALL IN A LOCATION REQUEST TO UNDERGROUND SERVICE ALERT (USA), PHONE No. 1-800-422-4133, TWO WORKING DAYS BEFORE DIGGING. NO CONSTRUCTION PERMIT WILL BE ISSUED BY THE PUBLIC WORKS DEPARTMENT INVOLVING EXCAVATION FOR UNDERGROUND FACILITIES UNLESS THE APPLICANT HAS BEEN PROVIDED AN INQUIRY IDENTIFICATION NUMBER BY U.S.A.
18. All related work shall conform to the City of Riverside, Park and Recreation Department of Standards.
19. Contact the Park Projects Inspector a minimum of 48 hours in advance at 787-7223 to schedule inspections. Inspections shall be required: a)when plant locations have been spotted in the field prior to digging plant pits, b)while digging plant pits and planting/relocating trees, c)after planting and all other indicated or specified work has been completed for start of maintenance, and d)at end of maintenance/final acceptance (contractor/developer will be released from maintenance only upon receipt of written notification from the city that the Park and Recreation Department is assuming maintenace responsibilities.
20. The Contractor/Developer shall maintain all plantings for a minimum period of one (1) year.
21. Street Tree planting shall be as follows:

STREET NAME	BOTANICAL NAME/COMMON NAME	MIN. SIZE	APPROX SPC'NG	NO REQ.
A. LINDEN ST.	BRAHEA EDULIS / GUADALUPE PALM	4' OF BRN. TRUNK	45'	10
B. NIKI WAY	WASHINGTONIA FILIFERA / CALIFORNIA FAN PALM	4' OF BRN. TRUNK	45'	22
C. GATO CRT.	WASHINTONIA FILIFERA / CALIFORNIA FAN PALM	4' OF BRN. TRUNK	45'	4

22. PARK AND RECREATION DEPARTMENT AND PUBLIC WORKS DEPARTMENT PERMITS ARE REQUIRED PRIOR TO COMMENCEMENT OF TREE RELOCATION AND/OR REMOVAL WORK. FOR ALL TREES WITHIN THE ULTIMATE PAVEMENT AREA, BACKFILL OF ALL HOLES IS TO BE INSPECTED BY THE CITY FOR PROPER COMPACTION.
23. ALL STREET TREES TO BE AUTOMATICALLY IRRIGATED

REGISTERED PROFESSIONAL ENGINEER
DENNIS C. FARNSWORTH
No. 31653
EXP. 12-31-88
CIVIL
STATE OF CALIFORNIA

* AS BUILT 6-6-90 B.M.S

INDEXED 9-18-87 LH

PAC. TEL.
Ken Palie
6-3-87

JOHN D ROSE & ASSOC
770 S BREA BLVD, STE 230
BREA CALIFORNIA 92621
(714) 529-9340

Dennis C. Farnsworth 6-1-87
DENNIS FARNSWORTH RCE 31653 DATE

MARK	REVISIONS	APPR.	DATE
⚠2	Added Paving Sections FRED	WLK	8/14/87
⚠1	N'LY CATCH BASIN NIKI WAY REVISED W = 8' FRED	WLK	9/1/87

DESIGNED BY K J DRAWN BY K J CHECKED BY DF (FRED)

BENCH MARK: I8-D
P.K. nail and City Engr. tag in W'ly C.B. wing in N'ly curb of 3rd. St., 1300'± W of Iowa Ave., 9'± W of the most W'ly driveway to Arco Service Station
EL 947.716

CITY OF RIVERSIDE
PUBLIC WORKS DEPARTMENT

APPROVED BY	DATE	BY
PRINCIPAL ENGINEER	6-26-87	SHE
PARK DEPARTMENT	6-18-87	GJ
TRAFFIC DIVISION	6/26/87	EXP
CHIEF P. W. ENGINEER	6.30 / 6/26/87	WLK

APPROVED BY Barry Beck
PUBLIC WORKS DIRECTOR
DATE 6/30/87

STREET IMPROVEMENT PLANS
TRACT 21907

HORIZ. SCALE: VERT. SCALE:

R-2872

SHEET 1 OF 3

JN 2271

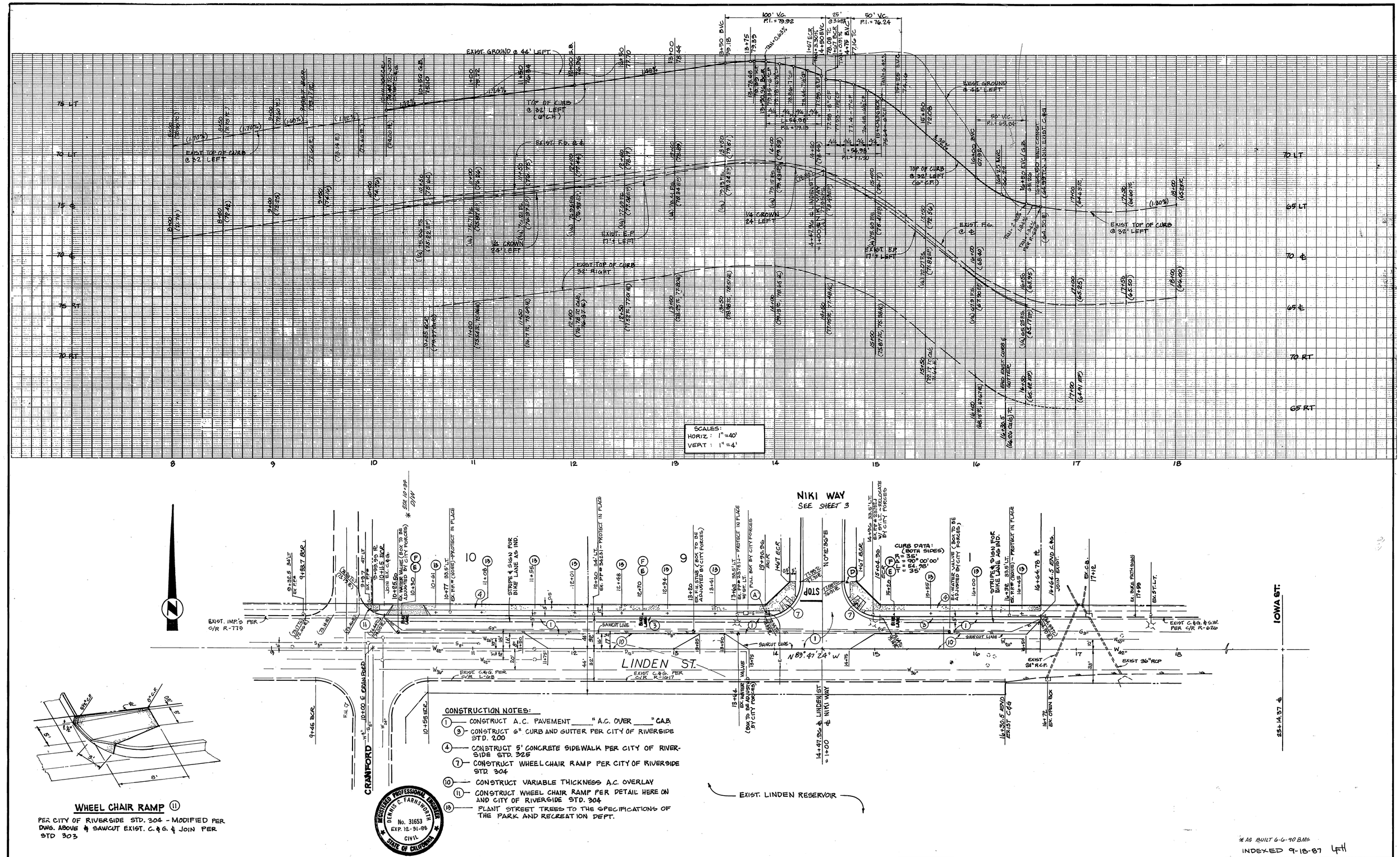

* AS BUILT 6-6-90 B.M.G.

INDEXED 9-18-87 LH

PAC TEL	SO. CAL. GAS CO.	CITY OF RIVERSIDE WATER DEPT.	CITY OF RIVERSIDE ELECTRIC DEPT.
Ken Palmi	W R Lassalee	Carl Weingarten	John Johnson
DATE 6-3-87	DATE 6/3/87	DATE 6/4/87	DATE 6/3/87

JOHN D ROSE & ASSOC
770 S BREA BLVD, STE 230
BREA CALIFORNIA 92621
(714) 529-9340

Dennis C Farnsworth 6-1-87
DENNIS FARNSWORTH RCE 31653 DATE

MARK	REVISIONS	APPR.	DATE

DESIGNED BY MTG DRAWN BY MTG CHECKED BY DCF

BENCH MARK:
I8-D
P.K. nail and City Engr. tag in W'ly C.B. wing in N'ly curb of 3rd. St., 1300'± W of Iowa Ave., 9'± W of the most W'ly driveway to Arco Service Sta.

EL 947.716

CITY OF RIVERSIDE
PUBLIC WORKS DEPARTMENT

APPROVED BY	DATE	BY
PRINCIPAL ENGINEER	6-26-87	
PARK DEPARTMENT	6-17-86	
TRAFFIC DIVISION	6/26/87	RP
CHIEF P.W. ENGINEER	6-30	
	6/26/87	

APPROVED BY
PUBLIC WORKS DIRECTOR
DATE 6/30/87

STREET PLAN & PROFILE
LINDEN STREET
TRACT 21907

R-2872
SHEET 2 OF 3

HORIZ. SCALE: 1" = 40' VERT. SCALE: 1" = 4'

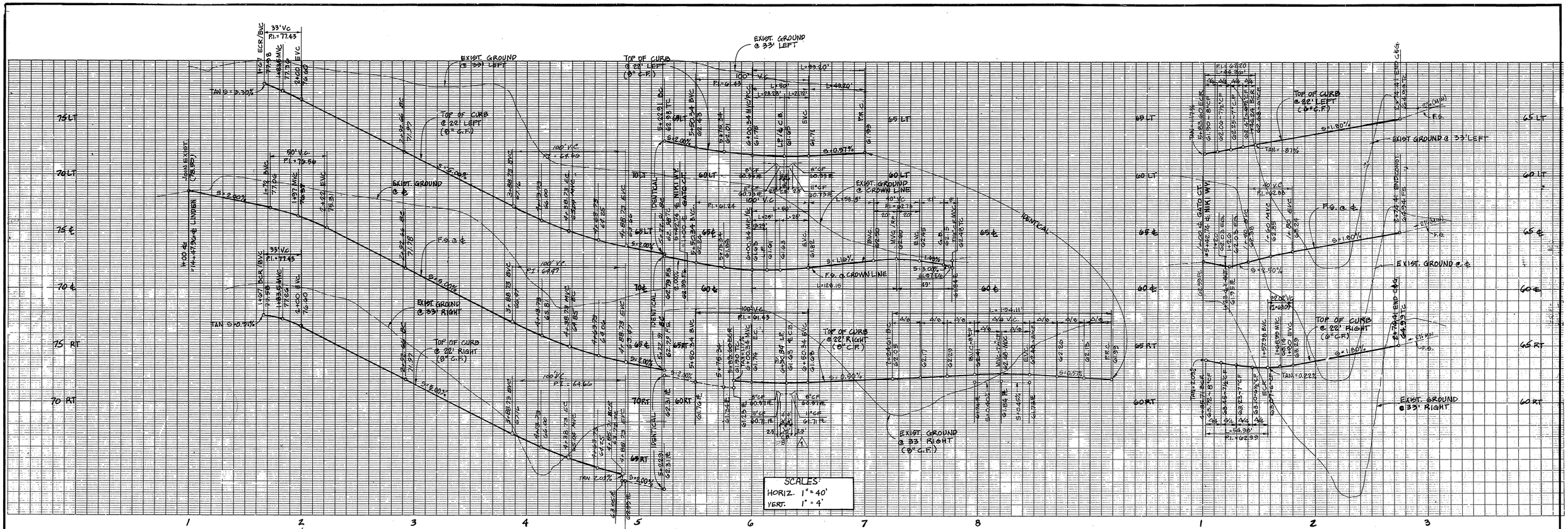

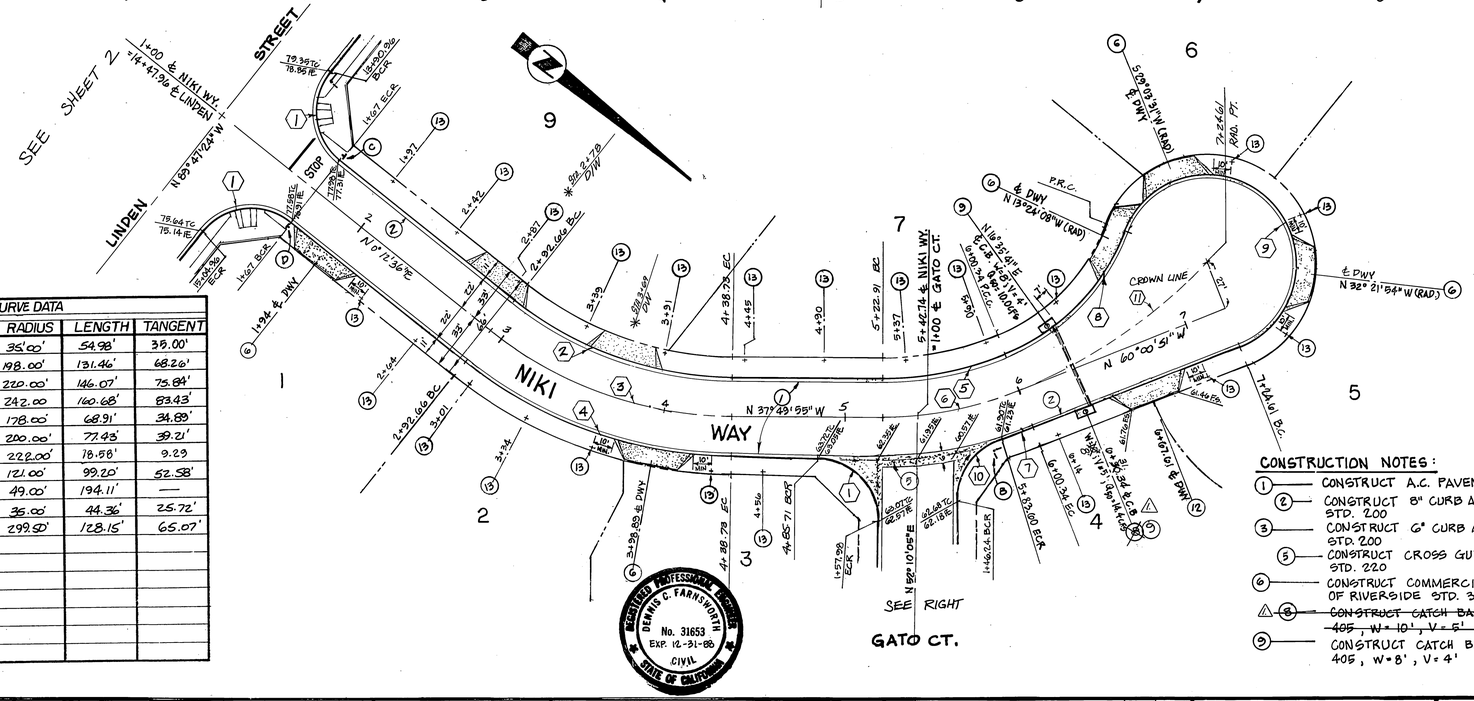

CURVE DATA				
No.	DELTA	RADIUS	LENGTH	TANGENT
1	90° 00' 00"	35.00'	54.98'	35.00'
2	38° 02' 31"	198.00'	131.46'	68.26'
3	38° 02' 31"	220.00'	146.07'	75.84'
4	38° 02' 31"	242.00'	160.68'	83.43'
5	22° 10' 56"	178.00'	68.91'	34.89'
6	22° 10' 56"	200.00'	77.43'	39.21'
7	4° 47' 39"	222.00'	18.58'	9.29
8	46° 58' 23"	121.00'	99.20'	52.58'
9	226° 58' 20"	49.00'	194.11'	—
10	72° 36' 43"	36.00'	44.36'	25.72'
11	24° 30' 55"	299.50'	128.15'	65.07'

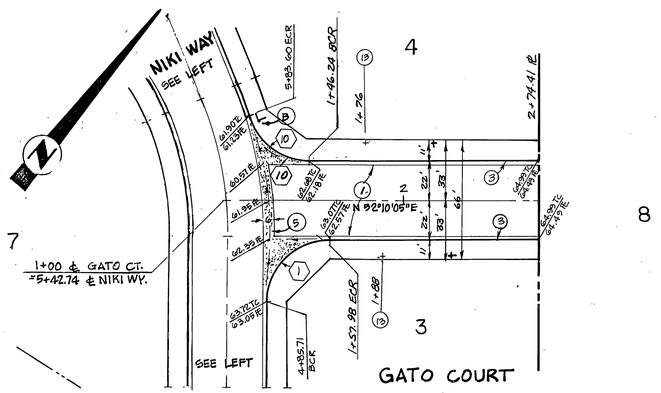

CONSTRUCTION NOTES:

1. CONSTRUCT A.C. PAVEMENT ___" A.C. OVER ___" C.A.B.
2. CONSTRUCT 8" CURB AND GUTTER PER CITY OF RIVERSIDE STD. 200
3. CONSTRUCT 6" CURB AND GUTTER PER CITY OF RIVERSIDE STD. 200
5. CONSTRUCT CROSS GUTTER PER CITY OF RIVERSIDE W= 6' STD. 220
6. CONSTRUCT COMMERCIAL DRIVEWAY APPROACH PER CITY OF RIVERSIDE STD. 302 ; A = 30' ; B = 44'
8. ~~CONSTRUCT CATCH BASIN PER CITY OF RIVERSIDE STD. 405 , W = 10' , V = 5'~~
9. CONSTRUCT CATCH BASIN PER CITY OF RIVERSIDE STD. 405 , W = 8' , V = 4'
12. CONSTRUCT COMMERCIAL DRIVEWAY APPROACH PER DETAIL SHT 1 & CITY STD. 302 ; A = 30' ; B = 44'
13. PLANT STREET TREES TO THE SPECIFICATIONS OF THE PARKS AND RECREATION DEPARTMENT.

*AS BUILT 6-6-90 B.M.
INDEXED 9-18-87 4H

JOHN D ROSE & ASSOC
770 S BREA BLVD, STE 230
BREA CALIFORNIA 92621
(714) 529-9340

Dennis C. Farnsworth 6-1-87
DENNIS FARNSWORTH RCE, 31653 DATE

MARK	REVISIONS	APPR.	DATE
1	LOCATION OF ℄ FROM G=30.34 TO G=31.34 REDO W=10' TO W=8'	WWW	8/7/87

DESIGNED BY KJR DRAWN BY KJR CHECKED BY DF

BENCH MARK:
I8-D
P.K. nail and City Engr. tag in W'ly C.B. wing in N'ly curb of 3rd. St., 1300'± W of Iowa Ave., 9'± W of the most W'ly driveway to Arco Service Sta.

EL 947.716

CITY OF RIVERSIDE
PUBLIC WORKS DEPARTMENT

APPROVED BY	DATE	BY
PRINCIPAL ENGINEER	6-26-87	
PARK DEPARTMENT	6-26-87	
TRAFFIC DIVISION	6/26/87	
CHIEF P.W. ENGINEER	6-30	
	6/26/87	

APPROVED BY
PUBLIC WORKS DIRECTOR
DATE 6/30/87

PLAN & PROFILE
STREET IMPROVEMENT PLANS
NIKI WAY & GATO CT.

HORIZ. SCALE: 1" = 40' VERT. SCALE: 1" = 4'

R- 2872

SHEET 3 OF 3

JN 1271