GENERAL NOTES:

1. CONST. SHALL BE IN ACCORDANCE WITH THE CITY OF RIVERSIDE, DEPT. OF PUBLIC WORKS, STD. DWG., AND THE STD. SPECIFICATIONS FOR PUBLIC WORKS CONST., CURRENT EDITION.
2. TRIM EDGE OF EXIST. PAVEMENT WHERE NEW PAVEMENT JOINS TO A SMOOTH STRAIGHT LINE. CONSTRUCT MATCH UP PAVING AS SHOWN ON PLAN.

CONSTRUCTION NOTES:

(200 / I) CONST. CURB & GUTTER PER STD. DWG. NO. 200, TYPE I, 6" C.F.

(1) CONST. VARIABLE THICKNESS A.C. OVERLAY.

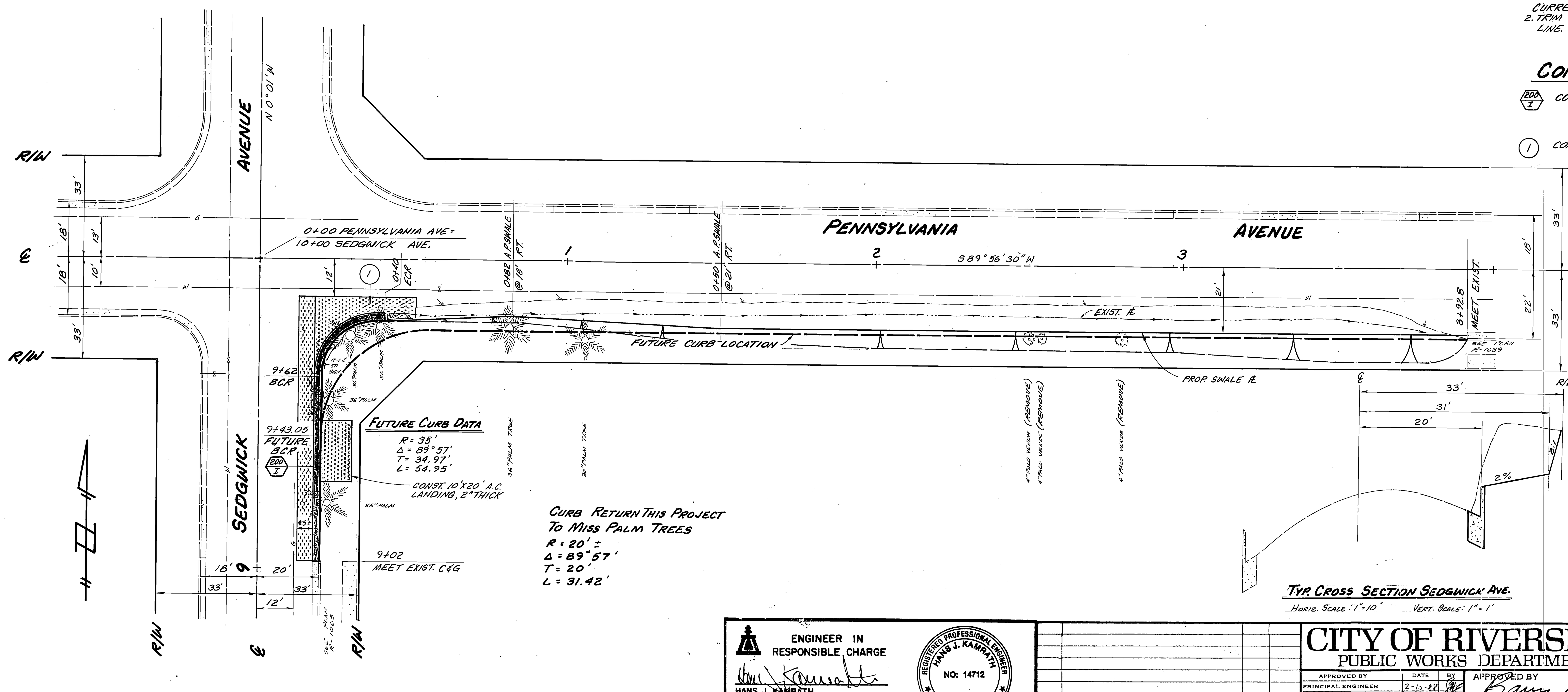

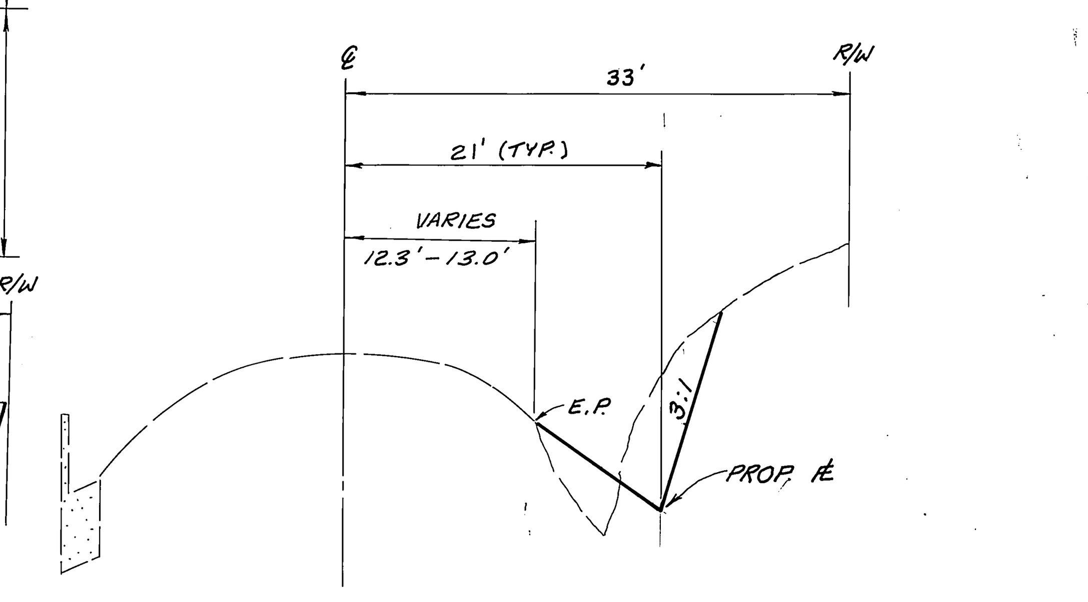

TYP. CROSS SECTION PENNSYLVANIA AVE.

HORIZ. SCALE: 1"=10'   VERT. SCALE: 1"=1'

* As built 7-27-88 TE   INDEX 2-24-88 LH

ENGINEER IN RESPONSIBLE CHARGE

HANS J. KAMRATH
R.C.E. 14712, expires 3/31/89
DATE 2/9/1988

REGISTERED PROFESSIONAL ENGINEER HANS J. KAMRATH NO: 14712 CIVIL STATE OF CALIFORNIA

MARK	REVISIONS	APPR.	DATE

DESIGNED BY ___ DRAWN BY TE CHECKED BY ___

CITY OF RIVERSIDE
PUBLIC WORKS DEPARTMENT

APPROVED BY	DATE	BY
PRINCIPAL ENGINEER	2-10-88	
PARK DEPARTMENT		
TRAFFIC DIVISION	2-10-88	
CHIEF P. W. ENGINEER		2-11
INSP. RSR 2/9/88	SURVEY	

APPROVED BY
PUBLIC WORKS DIRECTOR
DATE Feb. 11, 1988

SEDGWICK AVE. AT PENNSYLVANIA AVE.- STREET IMPROVEMENTS
SE CORNER TO 393' ± EAST

HORIZ. SCALE: 1" = 20'   VERT. SCALE: 1" = 2'

ACCOUNT NO. 30-575-270-07

R-2908

SHEET 1 OF 1

81630

OZALID- NO.1