104556

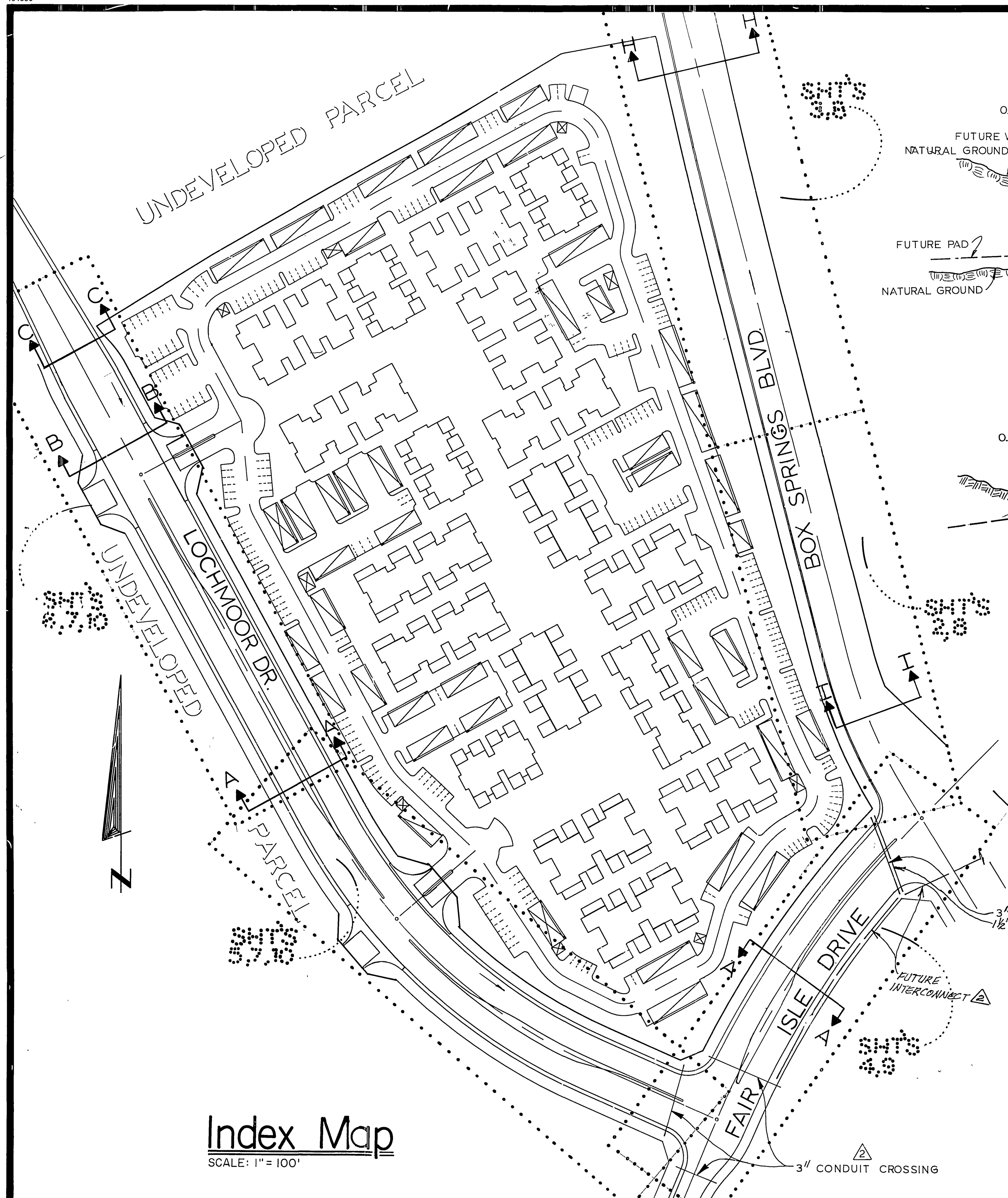


## Index Map

SCALE: 1" = 100'

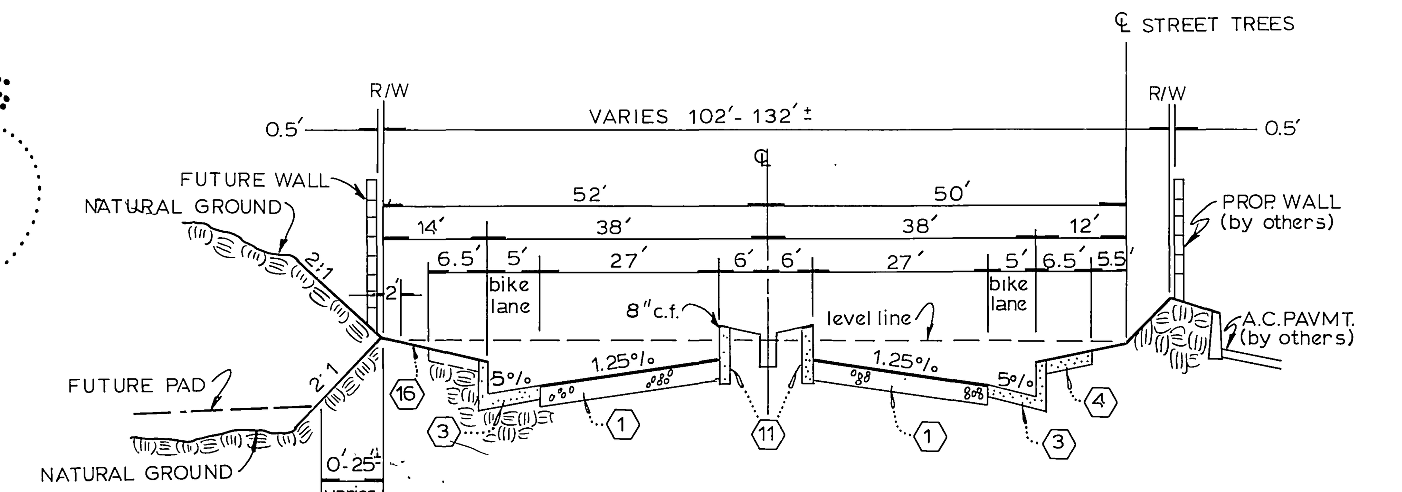


LOCHMOOR DR. & FAIR ISLE DR.
SECTION A-A
T.I. = 7
N.T.S.

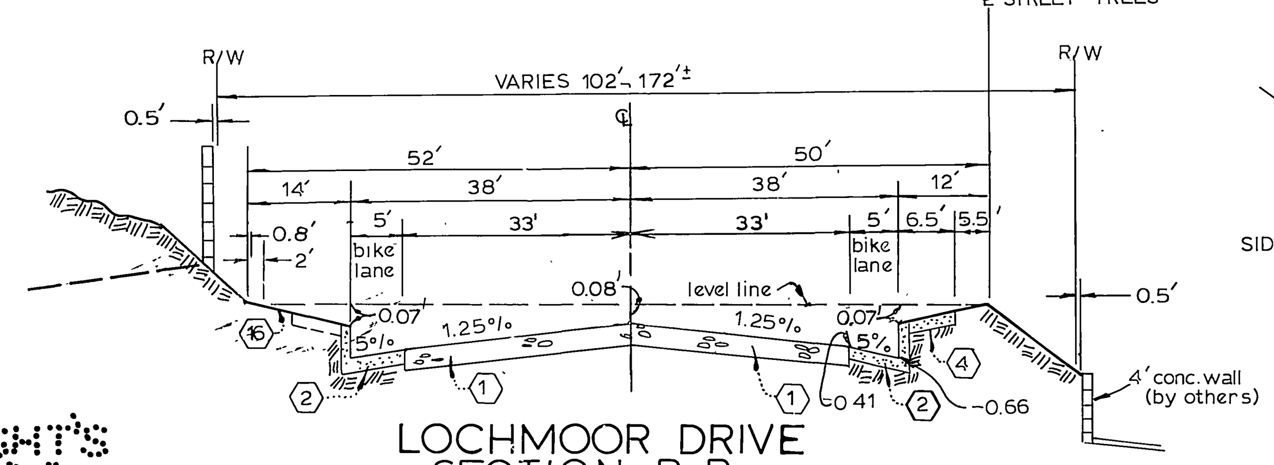


LOCHMOOR DRIVE
SECTION B-B
T.I. = 7
N.T.S.

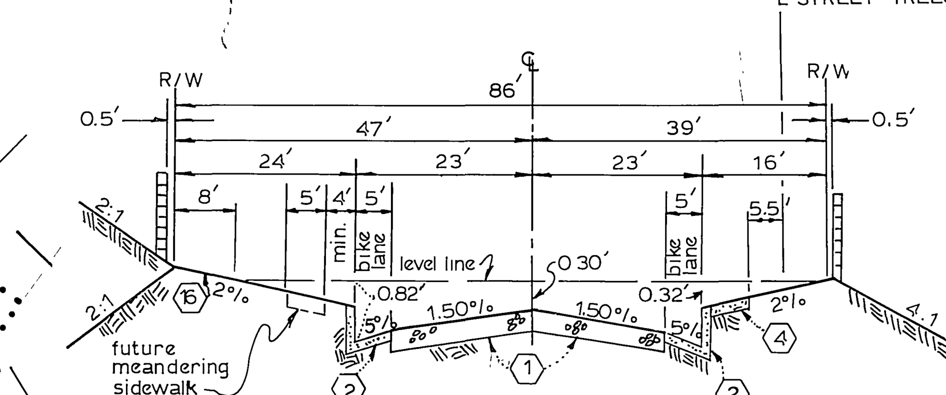


LOCHMOOR DR.
SECTION C-C
N.T.S.
T.I. = 6

3" CONDUIT CROSSING
1½" CONDUIT CROSSING

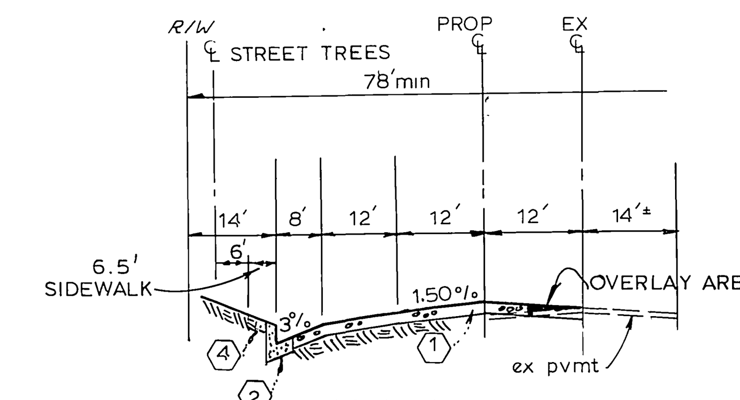


BOX SPRINGS BLVD.
SECTION H-H
N.T.S. T.I. = 7
STA. 25+08.81 TO STA. 30+18 22

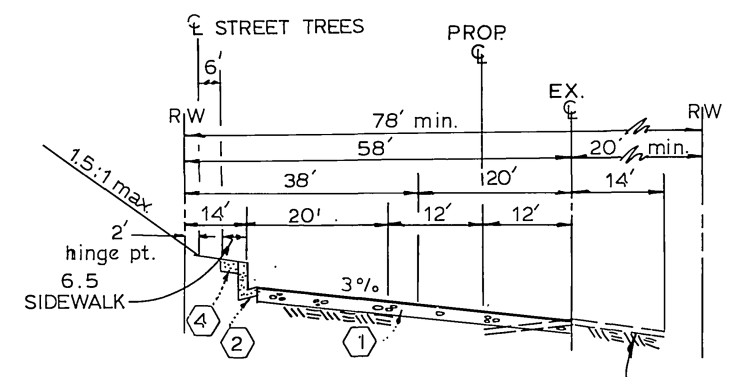


BOX SPRINGS BLVD.
SECTION I-I
EXIST. PVMT. & OVERLAY AREA
N.T.S. T.I. = 7
STA. 21+48.81

## QUANTITY ESTIMATE

| Nº | Description | Quantity |
|---|---|---|
| 1 | 8" P.C.C. CURB & 5' GUTTER | 3,148.00 L.F. |
| 2 | 6" P.C.C CURB & 2 GUTTER | 1,027.00 L.F. |
| 3 | 6" P.C.C. CURB & 5 GUTTER | 567.00 L.F. |
| 4 | 8" P.C.C CURB ONLY | 2,748.00 L.F. |
| 5. | 6' P.C.C. SIDEWALK | 16,216.00 S.F. |
| 6. | BLUE HYDRANT MARKERS | 5 EA. |
| 7. | P.C.C. CROSS GUTTER & SPANDRAL | 4,884.00 S.F. |
| 8 | 4" A.C. PAVEMENT | 19,267 SY = 4130 TONS |
| 9 | 4" CRUSHED AGG. BASE | 18,058 S.Y. = 2007 C.Y. |
| 10 | A C 6" BERM TYPE I | 505 L F |
| 11 | BARRICADE | 5 EA. |
| 12 | 2" x 4" REDWOOD HEADER | 190 L.F. |
| 13 | 2 1/2" ASPHALT SWALE | 140 S.F. |
| 14 | FOG SEAL | 1,806 GAL. |
| 15 | TRAFFIC STENCIL | 7,777 S.F. |
| 16 | TRAFFIC STRIPING | 9,425 L.F. |
| 17 | TRAFFIC SIGNS | 27 EA |
| 18 | TRAFFIC DELINEATORS | 4 EA |
| 19 | CONCRETE HEADWALL REMOVAL | 2 EA. |
| 20. | CATCH BASIN L = 10', STD. 407. | 2 EA. |
| 21 | CATCH BASIN L = 15, STD 407. | 1 EA. |
| 22 | 36" CSP, GAGE 16 | 10 LF |
| 23 | 30" RCP, CLASS III D = 1000 | 10 LF |
| 24 | A.C. PAVING REMOVAL | 1921 SY. |

## no. SHEET INDEX


1 TITLE SHEET
2-6 STREET PLANS & PROFILE
7 TRAFFIC ISLAND DETAILS
8-10 STRIPING & SIGNING PLANS


## CONSTRUCTION NOTES:

(1) CONSTRUCT A.C. OVER CRUSHED AGGREGATE BASE PER TYPICAL SECTION. THE TYPICAL SECTION SHALL BE 3 3/4" A.C. OVER 4" CRUSHED AGGREGATE BASE.

(2) CONSTRUCT 6" CURB AND GUTTER PER CITY STD. 200, TYPE I.

(3) CONSTRUCT 8" CURB AND GUTTER PER CITY STD. 200, TYPE I.

(4) CONSTRUCT CURB SIDEWALK PER CITY STD. 325.

(5) CONSTRUCT CONCRETE CROSS GUTTER PER CITY STD. 220. W = SEE PLAN.

(6) CONSTRUCT WHEELCHAIR RAMPS PER CITY STD. 304.

(7) CONSTRUCT CATCH BASIN PER CITY STD. 405 L AND V DIMENSIONS SHOWN ON PLAN. (BY OTHERS.)

(8) PLANT STREET TREES PER LANDSCAPE ARCHITECT PLANS. (BY OTHERS)

(9) CONSTRUCT BARRICADE PER CITY OF RIVERSIDE STD. 180.

(10) SAWCUT EXISTING A.C.

(11) CONSTRUCT 8" CURB ONLY PER CITY STD. NO. 200. TYPE II

(12) DEPRESS CURB PER WHEELCHAIR RAMP CITY STD. 304.

(13) CONSTRUCT 2" X 4" REDWOOD HEADER.

(14) CONSTRUCT CATCH BASIN PER CITY STD. 407; L AND V DIMENSIONS PER S.D PLAN D-572 (1)

(15) FIRE HYDRANT PER CWD-700 (BY OTHERS)

(16) SEED AND MULCH PER LANDSCAPE PLANS & SPECIFICATIONS. (BY OTHERS)

(17) CONSTRUCT 18" x 18" CATCH BASIN W/ GRATE AS PER BROOKS PRODUCTS DWG. NO 1818 L 24 W/ PARKWAY GRATE OR APPROVED EQUAL (BY OTHERS)

(18) CONSTRUCT 8" PVC PIPE (BY OTHERS).

(19) CONSTRUCT 8" PVC TO 36" RCP CONNECTION PER CITY STD. NO 423, CASE 1 (BY OTHERS.)

## GENERAL NOTES.

1. IT SHALL BE THE RESPONSIBILITY OF THE CONTRACTOR TO CLEAR THE RIGHT-OF-WAY IN ACCORDANCE WITH THE PROVISIONS OF LAW AS IT AFFECTS EACH UTILITY INCLUDING IRRIGATION LINES AND APPURTENANCES AND AT NO COST TO THE OWNER

2. CONSTRUCTION SHALL BE IN ACCORDANCE WITH THE CITY OF RIVERSIDE DEPARTMENT OF PUBLIC WORKS, STANDARD DRAWINGS, STANDARD DRAWING NO. 10 AND THE STANDARD SPECIFICATIONS FOR PUBLIC WORKS CONSTRUCTION, CURRENT EDITION INCLUDING THE 1986 & 1987 SUPPLEMENTS.

3. THE ENGINEER SIGNING THESE PLANS IS RESPONSIBLE FOR ASSURING THE ACCURACY AND ACCEPTABILITY OF THE WORK HEREON. IN THE EVENT OF DISCREPANCIES ARISING DURING CONSTRUCTION, THE ENGINEER SHALL BE RESPONSIBLE FOR DETERMINING AN ACCEPTABLE SOLUTION AND REVISING THE PLANS FOR APPROVAL BY THE CITY.

4. QUANTITIES SHOWN ARE FOR INFORMATION ONLY AND THE OWNER IS NOT RESPONSIBLE FOR THEIR ACCURACY.

5. THE DEVELOPER SHALL BE RESPONSIBLE FOR PRESERVING OR REESTABLISHING AND REFERENCING SURVEY MONUMENTS DESTROYED, DISTURBED OR BURIED AS A RESULT OF CONSTRUCTION SHOWN HEREON.

6. SEE "STREET LIGHTING PLANS" FOR QUANTITY AND LOCATION OF REQUIRED STREET LIGHTS. STREET LIGHTING IMPROVEMENTS BY OTHERS.

7. ALL FLAGGED ELEVATIONS SHALL BE STAKED IN THE FIELD BY THE ENGINEER

8. TRIM EDGE OF EXISTING PAVEMENT WHERE NEW PAVEMENT JOINS TO A SMOOTH, STRAIGHT LINE. CONSTRUCT MATCH-UP PAVING AS SHOWN ON PLAN AND OVERLAY PAVING AS DIRECTED IN THE FIELD TO PRODUCE A SMOOTH SECTION.

9. OMIT

10. ON ALL AREAS WITHIN PUBLIC RIGHT-OF-WAY WHERE THE FILL IS ONE (1) FOOT OR GREATER, A LETTER WILL BE REQUIRED FROM THE SOILS ENGINEER, CERTIFYING THE COMPACTION OF THE FILL BELOW SUBGRADE, PRIOR TO ISSUANCE OF THE CONSTRUCTION PERMIT/CUT SHEETS.

11. ALL TRAFFIC SIGNS SHALL BE INSTALLED PRIOR TO OPENING THE STREETS TO TRAFFIC.

12. ANY TRAFFIC CONTROL STRIPING OBLITERATED AND/OR BADLY WORN DURING CONSTRUCTION SHALL BE RESTORED BY THE CONTRACTOR WITHIN 5 DAYS AFTER NOTIFICATION FROM THE CITY INSPECTORS.

13. FINAL STRIPING FOR TRAFFIC CONTROL AND/OR PAVEMENT MARKING TO BE THE RESPONSIBILITY OF THE CONTRACTOR.

14. THE CONTRACTOR SHALL CALL IN A LOCATION REQUEST TO UNDERGROUND SERVICE ALERT (USA), PHONE NO. 1-800-422-4133, TWO WORKING DAYS BEFORE DIGGING. NO CONSTRUCTION PERMIT WILL BE ISSUED BY THE PUBLIC WORKS DEPARTMENT INVOLVING EXCAVATION FOR UNDERGROUND FACILITIES UNLESS THE APPLICANT HAS BEEN PROVIDED AN INQUIRY IDENTIFICATION NUMBER BY U.S.A.

15. IN PAVEMENT OVERLAY AREAS, DISTRESSED PAVEMENT SHALL BE REMOVED AND REPLACED AS DIRECTED BY THE INSPECTOR PRIOR TO OVERLAYING WITH A.C. PAVING.

ALL LANDSCAPING AND SLOPE SEEDING AND MULCHING SHALL BE BY OTHERS.

1. ALL RELATED WORK SHALL CONFORM TO THE CITY OF RIVERSIDE PARK AND RECREATION DEPARTMENT STANDARDS.

2. CONTACT THE STREET TREE INSPECTOR A MINIMUM OF 48 HOURS IN ADVANCE AT 351-6126 TO SCHEDULE INSPECTION. INSPECTIONS SHALL BE REQUIRED:

   A. WHEN PLANT LOCATIONS HAVE BEEN SPOTTED IN THE FIELD PRIOR TO DIGGING PLANT PITS.

   B. WHILE DIGGING PLANT PITS AND PLANTING/RELOCATING TREES.

   C. AFTER PLANTING AND ALL OTHER INDICATED OR SPECIFIED WORK HAS BEEN COMPLETED FOR START OF MAINTENANCE.

   D. AT THE END OF MAINTENANCE / FINAL ACCEPTANCE (CONTRACTOR WILL BE RELEASED FROM MAINTENANCE ONLY UPON RECEIPT OF WRITTEN NOTIFICATION FROM THE CITY THAT THE PARK AND RECREATION DEPARTMENT IS ASSUMING MAINTENANCE RESPONSIBILITIES)

3. THE CONTRACTOR SHALL MAINTAIN ALL PLANTINGS FOR A MINIMUM PERIOD OF ONE (1) YEAR

4. STREET TREE PLANTING SHALL BE AS FOLLOWS:

| | STREET NAME | BOTANICAL NAME/COMMON NAME | MIN. SIZE | APPROX. SPACING | NO. REQ. |
|---|---|---|---|---|---|
| A. | BOX SPRINGS BLVD. | PLATANUS ACERIFOLLIA BLOOD GOOD / LONDON PLANE TREE. | 24" BOX | 45' | 21 |
| B. | LOCHMOOR DR. | PLATANUS ACERIFOLIA BLOOD GOOD/LONDON PLANE TREE | 15 GAL. | 45' | 21 |
| C. | FAIR ISLE DR. | PLATANUS ACERIFOLIA-BLOOD GOOD/LONDON PLANE TREE | 24" BOX | 45' | 7 |

   D. MEDIAN - SEE LANDSCAPE PLAN NO. A-2215 PREPARED BY RANDOLF HLUBIK ASSOCIATES, INC.

5. PARK AND RECREATION DEPARTMENT AND PUBLIC WORKS DEPARTMENT PERMITS ARE REQUIRED PRIOR TO COMMENCEMENT OF TREE RELOCATION AND/OR REMOVAL WORK. FOR ALL TREES WITHIN THE ULTIMATE PAVEMENT AREA, BACKFILL OF ALL HOLES IS TO BE INSPECTED BY THE CITY FOR PROPER COMPACTION.

6. ALL STREET TREES TO BE AUTOMATICALLY IRRIGATED.

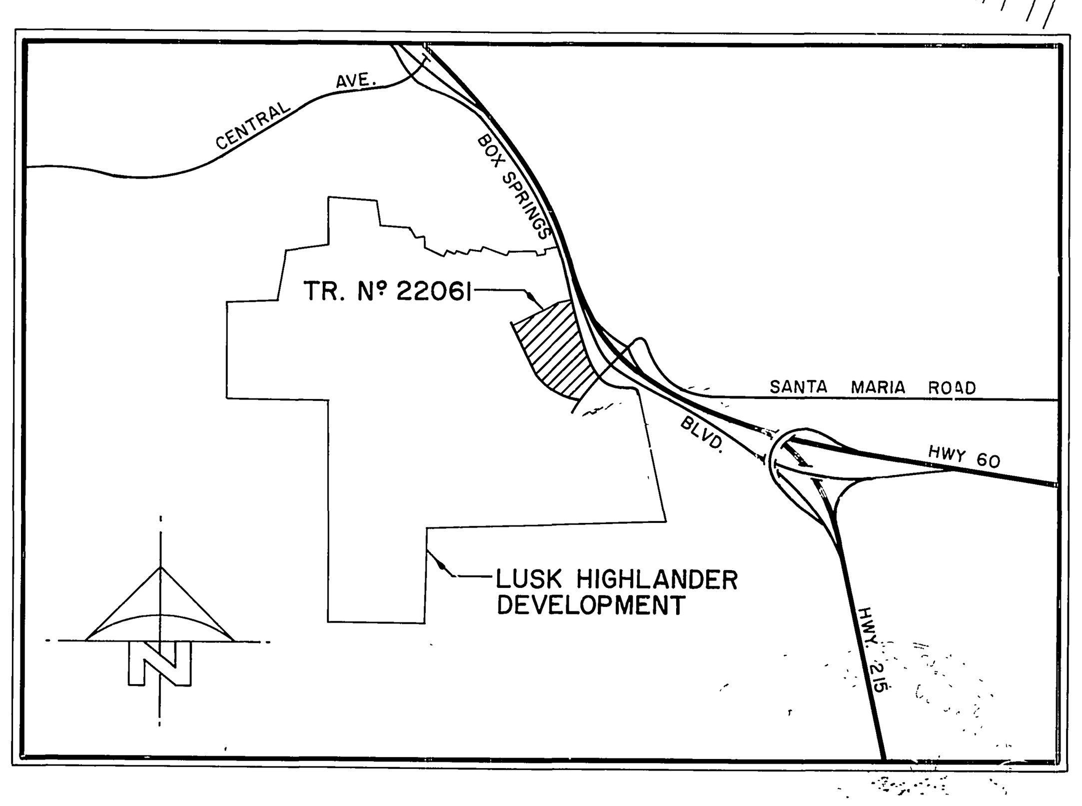


## Vicinity Map

SCALE: 1" = 2000'

3.5 MILES NORTHWEST ALONG THE ATCHISON, TOPEKA AND SANTA FE RAILWAY FROM THE STATION AT MARCH FIELD, 76 FEET SOUTHEAST OF MILEPOST 6, SET VERTICALLY IN THE SOUTHWEST FACE OF A ROCK CUT 7 FEET NORTHEAST OF THE NORTHEAST RAIL, 1.9 FEET ABOVE THE GROUND, AND ABOUT 1 FOOT HIGHER THAN THE TRACK. BRASS DISK STAMPED D1144 1961 ELEVATION 1451.887 (BRASS DISK IS BROKEN OFF F.D. ORIGINAL SHANK OF B.D WITH P.K. NAIL DRIVEN ALONG SIDE SHANK)

REGISTERED PROFESSIONAL ENGINEER PAUL T. HACUNDA No. 41627 12-31-91 CIVIL STATE OF CALIFORNIA


Construction contractor agrees that in accordance with generally accepted construction practices, construction contractor will be required to assume sole and complete responsibility for job site conditions during the course of construction of the project, including safety of all persons and property; that this requirement shall be made to apply continuously and not be limited to normal working hours, and construction contractor further agrees to defend, indemnify and hold design professional harmless from any and all liability, real or alleged, in connection with the performance of work on this project, excepting liability arising from the sole negligence of design professional

California Council of Civil Engineers & Land Surveyors


PACIFIC BELL TELEPHONE
APPROVED BY: [signature] DATE: 10-27-87

SOUTHERN CALIFORNIA GAS CO
APPROVED BY: W.R. Lassabee DATE: 10/13/87

APPROVED BY: [signature]
REG. CIVIL ENGINEER NO. 41627
DATE: 12-21-...
APPROVED BY:
DATE:

NBS/LOWRY
ENGINEERS & PLANNERS
P.O. BOX 851 HEMET, CA. 92343 (714) 658-7116

SCALE: AS NOTED
BENCH MARK: SEE ABOVE
DATE: MAR. 1987

| MARK | REVISIONS | APPR. | DATE |
|---|---|---|---|
| (2) | ADDED CONDUIT CROSSING | | |
| (1) | REVISIONS PER TRACT 22408 | | |

DESIGNED BY D.A.W. DRAWN BY W.R.P. CHECKED BY J.W.W.

# CITY OF RIVERSIDE
## PUBLIC WORKS DEPARTMENT

| APPROVED BY | DATE | BY |
|---|---|---|
| PRINCIPAL ENGINEER | 4-5-88 | |
| PARK DEPARTMENT | 11-3-87 | |
| TRAFFIC DIVISION | 4-8-88 | |
| CHIEF P.W. ENGINEER | 4-5-88 | |

APPROVED BY William D. Gardner
PUBLIC WORKS DIRECTOR
DATE 4/11/88

STREET IMPROVEMENTS
TRACT No. 22061
TITLE SHEET

HORIZ. SCALE: 1" =
VERT. SCALE: 1" =

ACCOUNT NO. 002705
R-2941
SHEET 1 OF 10
H-80011.061

PC 2215

FILE # PS-4-15732
INDEXED 4-15-88

104556

LT 1510

SHOULDER 1515

℄ 1515

℄ 1505

RT. 1505

1510 LT.

1500 LT.

1490 LT.

1480 SHLDR.

1495 ℄

1490 ℄

1490 RT.

MATCHLINE 26+00.00 SEE SHEET NO. 3

EXISTING GROUND ℄ R.O.W 58' LEFT OF MONUMENTED C/L

TOP OF 6" CURB @ 32' LEFT OF CONSTRUCTION ℄

SUPER ELEVATION RUNOFF 270'

CROWN RUNOFF 90'

SUPER ELEVATION TRANSITION

SUPERELEVATION TRANSITION

100' V.C.

150' V.C.

STA. 20+00

EXIST PAVEMENT @ LIP 12' RIGHT OF MONUMENTED C/L

PROP GRADE @ CONST C/L (NEW ALIGNMENT)

EXISTING PAVEMENT MONUMENTED C/L

20+43.46 B.C.R. 1507.56 T.C.

20+98.81 B.V.C. 1506.19 T.C.

21+48.81 M.V.C. 1504.78 T.C.

21+98.81 E.V.C. 1503.02 T.C.

22+38.81 E.C. & G.B. 1501.48 T.C.

24+18.81 G.B. 1495.38 T.C.

1489.82 T.C.

20+15.12 B.V.C. 1506.86 T.C.

20+50 M.V.C. 1505.25

21+48.81 E.V.C. 1503.52

21+98.81 E.C. & G.B. 1502.44

3.85%

3.39%

3.03%

1.72%

2.48%

SCALE:
HORIZ: 1" = 40'
VERT: 1" = 4'

18 19 20 21 22 23 24 25 26

SEE SHT. 4 FAIR ISLE DRIVE

TRACT 22061
(SEE DETAILED GRADING PLANS)

PM 21168

3" CONDUIT CROSSING

EXIST. ANCHOR (TO REMAIN)

BCR END OF CURB

FUTURE INTERCONNECT

18+94.33 ECR (FUTURE)

10+83.12 ECR

5'x20'x12" thick A.C. DRAINAGE APRON

10+36.15 ECR 1509.26 T.C. 1508.59 E. 20+43.46 B.C.R. 1507.56 T.C. 1507.06 E.

1½" CONDUIT

20+80.00 PP J34432 (TO REMAIN)

PROPOSED 42" S.D. PER D-572

22+38.66 E.C. 1501.48 T.C. 1500.81 E.

EXIST. ANCHOR (TO REMAIN)

19+88.55 BOX SPRINGS 9+88.45 FAIR ISLE DR

20+00.66 B.C.

9+85.66 B.C.

12.11

FUTURE CURB & GUTTER

18+70.18 E.C. FUTURE

PROPOSED E.P.

(NEW ALIGNMENT)

(N 31° 25' 52" W 118.38')

PP J34433 (TO REMAIN)

EXIST 24" CMP & 8'4 HEADWALL 94.70 LF.

INSTALL 4-FT DELINEATOR

EXIST. PVMT. (TO BE REMOVED)

REMOVE A.C. CURB

19+99.55 BOX SPRINGS 9+54.69 FAIR ISLE DR

STA. 9+14.49 BEGIN ASPHALT BERM

22+13.85 E.C.

PROP 6" ASPHALT BERM 420 L.F.

LIMITS OF OVERLAY

EXIST. A.C. PAVING (TO REMAIN)

22+22.00 PP J34431 (TO REMAIN)

22+38.66 E.C.

23+66.00 P.P. J34430 (TO REMAIN)

25+39.00 P.P. J34429 (TO REMAIN)

EXIST. 36" CMP & 12' HEADWALL 80.79 FT.

1.5' WIDE A.C. SWALE (TO BE REMOVED) 92.22 FT.

EXIST. ASPHALT BERM (TO BE REMOVED)

CONST. EXIST. A.C. SHOULDER (TO REMAIN)

REMOVE HEADWALL CONST. 10 LF 36" C.S.P.

MON. ℄ EXIST ℄

EXIST. CURB & GUTTER (TO REMAIN)

N 14° 27' 07" W 386.15'

5.0% NEG. SHOULDER

EXIST A.C. CURB (TO REMAIN)

EXIST CURB & GUTTER (TO REMAIN)

TELE. M.H.

18+83.00 START 8:1 TAPER REMOVE A.C. BERM

R/W

CALTRANS

CALTRANS R/W

EXISTING SANITARY SEWER PER S-1424

STA. 24+50 END ASPHALT BERM

1478.68 FT. REMOVE EX. INLET

ADD CATCH BASIN #407 L=15' V=12.0'

EX. INLET W/ STEEL GRATE INV. 79.21

BENCH MARK

36" R.C.P.

1490.36 E.

## BOX SPRINGS BLVD.

## CONSTRUCTION NOTES

1. CONSTRUCT A.C. OVER CRUSHED AGG. BASE PER TYPICAL SECTION.
2. CONSTRUCT 6" CURB & GUTTER PER CITY STD. 200, TYPE I WITH 2' GUTTER.
4. CONSTRUCT CURB SIDEWALK PER CITY STD. 325.
5. CONSTRUCT CONC. X-GUTTER PER CITY STD. 220, W = SEE PLAN
6. CONSTRUCT WHEELCHAIR RAMPS PER CITY STD. 304.
8. PLANT STREET TREES PER LANDSCAPE ARCHITECT PLANS (BY OTHERS)
9. CONST. BARRICADE PER CITY OF RIVERSIDE STD. 180.
10. SAWCUT EXISTING A.C.
11. CONSTRUCT 6" CURB ONLY PER CITY STD. NO. 200.
12. DEPRESS CURB PER WHEELCHAIR RAMP CITY STD. 304.
13. CONST. 2"x4" REDWOOD HEADER.
14. CONST. CATCH BASIN PER CITY STD. 407; L &V DIMENSIONS ON PLAN.

NOTE:
ALL STATIONING ON BOX SPRINGS IS TO MONUMENTED C/L

3.5 MILES NORTHWEST ALONG THE ATCHISON, TOPEKA AND SANTA FE RAILWAY FROM THE STATION AT MARCH FIELD, 76 FEET SOUTHEAST OF MILEPOST 6, SET VERTICALLY IN THE SOUTHWEST FACE OF A ROCK CUT 7 FEET NORTHEAST OF THE NORTHEAST RAIL, 1.9 FEET ABOVE THE GROUND, AND ABOUT 1 FOOT HIGHER THAN THE TRACT. BRASS DISK STAMPED D1144 1961 ELEVATION 1451.887 (BRASS DISK IS BROKEN OFF F.D. ORIGINAL SHANK OF B.D WITH P.K. NAIL DRIVEN ALONG SIDE SHANK)

| CURVE DATA | | | | |
|---|---|---|---|---|
| NO. | Δ | R | L | T |
| ① | 28° 38' 55" | 400.00' | 200.01' | 102.14' |
| ② | 30° 41' 47" | 400.00' | 214.30' | 109.79' |
| ③ | 17° 02' 45" | 800.00' | 238.00' | 119.89' |
| ④ | 13° 57' 43" | 832.00' | 202.74' | 101.88' |
| ⑤ | 71° 23' 52" | 35.00' | 43.61' | 25.15' |
| ⑥ | 107° 40' 39" | 35.00' | 65.78' | 47.89' |
| ⑦ | 00° 07' 25" | 1200.00' | 2.59' | 1.29' |

GRAPHIC SCALE
40 0 40 80 120

REGISTERED PROFESSIONAL ENGINEER PAUL T. HACKMAN No. 41627 Exp. 12-31-87 CIVIL STATE OF CALIFORNIA

PACIFIC BELL TELEPHONE
APPROVED BY DATE 10-30-87

SOUTHERN CALIFORNIA GAS CO.
APPROVED BY DATE 10/26/87

APPROVED BY: Paul Hackman
DATE: 12/11/87 REG. CIVIL ENGINEER NO. 41627

APPROVED BY:
DATE:

NBS/LOWRY
ENGINEERS & PLANNERS
P.O. BOX 851 HEMET, CA. 92343 (714) 653-7116

SCALE: HORIZ. 1" = 40' VERT. 1" = 4'
DATE: MARCH 1987
BENCH MARK: SEE ABOVE

| MARK | REVISIONS | APPR. | DATE |
|---|---|---|---|
| 4 | ADDED CONDUIT CROSSING | | |
| 3 | REVISED STATION & ELEV. | | |
| 2 | REVISIONS PER TRACT 22408 | | |
| 1 | DELETED AC BERM | | |

DESIGNED BY DAW DRAWN BY WRP CHECKED BY PJH

CITY OF RIVERSIDE
PUBLIC WORKS DEPARTMENT

| APPROVED BY | DATE | BY |
|---|---|---|
| PRINCIPAL ENGINEER | 4-7-88 | |
| PARK DEPARTMENT | 11-3-87 | |
| TRAFFIC DIVISION | 4-8-88 | |
| CHIEF ENGINEER | 4-3-88 | |

APPROVED BY
PUBLIC WORKS DIRECTOR
DATE 4/4/88

LUSK HIGHLANDER
STREET IMPROVEMENT PLANS
TRACT 22061
BOX SPRINGS BLVD.
STA. 19+00 to STA. 26+00

HORIZ. SCALE: 1" = 40' VERT. SCALE: 1" = 4'

ACCOUNT NO. 002705
R - 2941
SHEET 2 OF 10
H-80011.061

PC 2215

FILE # PS-4-15722
INDEXED 4-15-88 GH

104556

LT. 1485 | LT. 1480 | ℄ 1490 | ℄ 1480 | RT. 1470 | 1480 LT. | 1470 LT. | 1480 ℄ | 1470 RT. | 1460 RT.

MATCHLINE 26+00.00 SEE SHEET NO. 2

TOP OF 6" CURB @ 32' LEFT OF CONST. C/L

PROPOSED 1/4 CROWN GRADE @ 24' LEFT OF CONSTRUCTION C/L

PROPOSED PAVEMENT @ CONSTRUCTION C/L

EXIST. PAVEMENT @ MONUMENTED C/L

EXIST. PAVEMENT @ LIP 12½' RIGHT OF MONUMENTED C/L

TOP OF 6" CURB @ 32' LEFT OF CONSTRUCTION C/L (FUTURE)

EXISTING GROUND @ R.O.W. 58' LEFT OF MONUMENTED C/L

PROPOSED PAVEMENT @ 1/4 CROWN 24' LEFT OF CONSTRUCTION C/L (FUTURE)

PROPOSED PAVEMENT @ CONSTRUCTION C/L (FUTURE)

26 | 27 | 28 | 29 | 30 | 31 | 32 | 33

SCALE:
HORIZ. 1" = 40'
VERT. 1" = 4'

## CONSTRUCTION NOTES

1. CONST. A.C. OVER CRUSHED AGG. BASE PER TYP. SECTION
2. CONST. 6" CURB & GUTTER PER CITY STD. 200, TYPE 1
10. SAWCUT EXIST. A.C.
4. CONSTRUCT CURB & SIDEWALK PER CITY STD. 325.
14. CONST. CATCH BASIN PER CITY STD. 407; L&V DIMENSIONS ON PLAN.

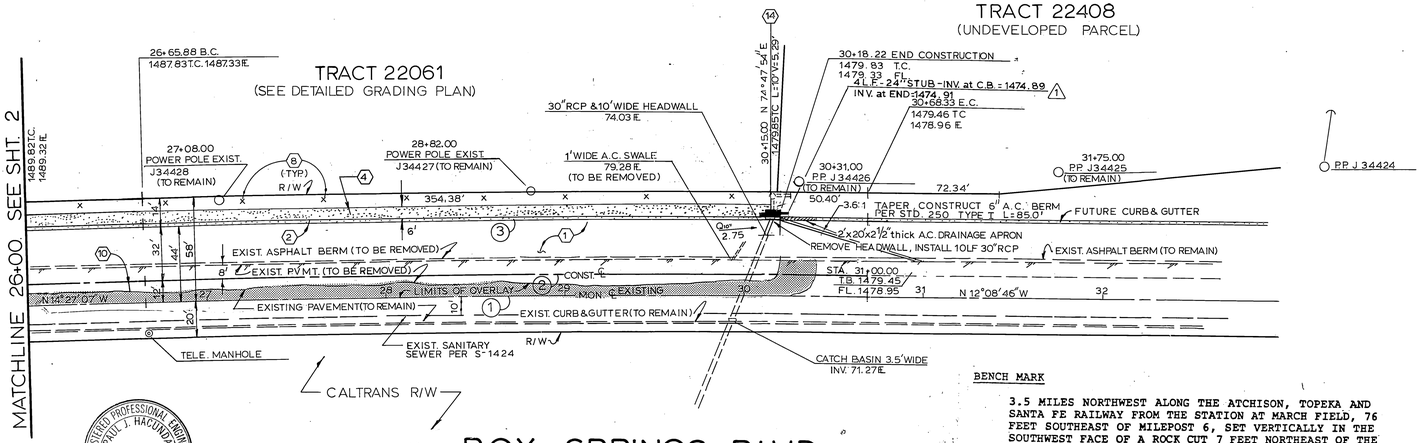


| CURVE DATA | | | | |
|---|---|---|---|---|
| NO. | Δ | R | L | T |
| 1 | 2° 18' 21" | 10,000.00' | 402.44' | 201.25' |
| 2 | 2° 18' 21" | 10,012.00' | 402.93' | 201.49' |
| 3 | 2° 18' 21" | 10044.00' | 404.21' | 202.13' |

REGISTERED PROFESSIONAL ENGINEER PAUL J. HACUNDA No. 41627 Exp. 12-31-87 CIVIL STATE OF CALIFORNIA

BENCH MARK

3.5 MILES NORTHWEST ALONG THE ATCHISON, TOPEKA AND SANTA FE RAILWAY FROM THE STATION AT MARCH FIELD, 76 FEET SOUTHEAST OF MILEPOST 6, SET VERTICALLY IN THE SOUTHWEST FACE OF A ROCK CUT 7 FEET NORTHEAST OF THE NORTHEAST RAIL, 1.9 FEET ABOVE THE GROUND, AND ABOUT 1 FOOT HIGHER THAN THE TRACT. BRASS DISK STAMPED D1144 1961 ELEVATION 1451.887 (BRASS DISK IS BROKEN OFF F.D. ORIGINAL SHANK OF B.D WITH P.K. NAIL DRIVEN ALONG SIDE SHANK)

40 0 40 80 120

PACIFIC BELL TELEPHONE
APPROVED BY _____ DATE 10-27-87

SOUTHERN CALIFORNIA GAS CO.
APPROVED BY _____ DATE 10/19/87

APPROVED BY: Paul J. Hacunda DATE: 10/11/87
REG. CIVIL ENGINEER NO. 41627

APPROVED BY: _____ DATE: _____

NBS/LOWRY
ENGINEERS & PLANNERS
P.O. BOX 851 HEMET, CA. 92343 (714) 658-7116

SCALE: HORIZ. 1" = 40' VERT. 1" = 4'
DATE: MAR 1987
BENCH MARK: SEE ABOVE

| MARK | REVISIONS | APPR. | DATE |
|---|---|---|---|
| 1 | ADD STUB | | |

DESIGNED BY D.W. DRAWN BY W.R.P. CHECKED BY P.J.H.

# CITY OF RIVERSIDE
## PUBLIC WORKS DEPARTMENT

| APPROVED BY | DATE | BY |
|---|---|---|
| PRINCIPAL ENGINEER | 4-8-88 | |
| PARK DEPARTMENT | 11-3-87 | |
| TRAFFIC DIVISION | 4/6/88 | |
| CHIEF P.W. ENGINEER | 4-8-88 | |

APPROVED BY: William D. Gardner, PUBLIC WORKS DIRECTOR
DATE 4/11/88

# LUSK HIGHLANDER
## STREET IMPROVEMENT PLANS
## TRACT 22061
## BOX SPRINGS BLVD.
## STA. 26+00 to END CONST.

ACCOUNT NO. 002705
R-2941
SHEET 3 OF 10
H-80011.061

HORIZ. SCALE: 1" = 40' VERT. SCALE: 1" = 4'

PC 2215

FILED R.S.-4-15732
INDEXED 4-15-88 GH

104556

LT. 1520 | LT. 1510 | ℄ 1505 | RT. 1505 | 1520 LT. | 1525 ℄ | 1525 RT. | 1520 RT.

CURVE 10 | CURVE 11 | CURVE 4 | CURVE 5

TOP OF 8" CURB ℄ 38' LT. OF ℄

TOP OF 8" CURB ℄ 38' RIGHT OF ℄

TOP OF 8" CURB ℄ 18' LT. OF C/L

TOP OF 8" CURB ℄ 18' RT. OF C/L

PROP GRADE ℄

TOP OF MEDIAN

MEDIAN INLET

END OF CONSTRUCTION

BOX SPRINGS BLVD N.

80' V.C.

50' V.C.

100' V.C.

54.12' V.C.

53.33' V.C.

43.61' V.C.

65.78' V.C.

358.73'

352.00'

SCALE :
HORIZ: 1" = 40'
VERT: 1" = 4'

BENCH MARK

3.5 MILES NORTHWEST ALONG THE ATCHISON, TOPEKA AND SANTA FE RAILWAY FROM THE STATION AT MARCH FIELD, 76 FEET SOUTHEAST OF MILEPOST 6, SET VERTICALLY IN THE SOUTHWEST FACE OF A ROCK CUT 7 FEET NORTHEAST OF THE NORTHEAST RAIL, 1.9 FEET ABOVE THE GROUND, AND ABOUT 1 FOOT HIGHER THAN THE TRACT. BRASS DISK STAMPED D1144 1961 ELEVATION 1451.887 (BRASS DISK IS BROKEN OFF F.D. ORIGINAL SHANK OF B.D WITH P.K. NAIL DRIVEN ALONG SIDE SHANK)

| CURVE DATA | | | | |
|---|---|---|---|---|
| NO. | Δ | R | L | T |
| (1) | 22° 49′ 53″ | 1200.00′ | 478.18′ | 242.30′ |
| (2) | 00° 47′ 05″ | 1200.00′ | 16.44′ | 8.22′ |
| (3) | ~~22° 02′ 48″~~ 22° 02′ 48″ | 1200.00′ | ~~461.75′~~ 459.15′ | ~~233.70′~~ 232.42′ |
| (4) | 88° 35′ 37″ | 35.00′ | 54.12′ | 34.15′ |
| (5) | 87° 17′ 58″ | 35.00′ | 53.33′ | 33.39′ |
| (6) | 16° 19′ 23″ | 1238.00′ | 352.69′ | 177.55′ |
| (7) | 17° 44′ 15″ | 1162.00′ | 359.73′ | 181.31′ |
| (8) | 20° 31′ 11″ | 138.00′ | 49.42′ | 24.98′ |
| (9) | 21° 04′ 17″ | 162.00′ | 59.58′ | 30.13′ |
| (10) | 107° 40′ 39″ | 35.00′ | 65.78′ | 47.89′ |
| (11) | 71° 23′ 52″ | 35.00′ | 43.61′ | 25.15′ |
| (12) | 00° 07′ 25″ | 1200.00 | 2.59′ | 1.29′ |

## CONSTRUCTION NOTES

(1) CONST. A.C. OVER CRUSHED AGG. BASE PER TYP SECTION.
(3) CONST. 8" CURB & GUTTER PER CITY STD. 200 TYPE I WITH 5' BIKE LANE GUTTER.
(4) CONST. CURB SIDEWALK PER CITY STD. 325.
(6) CONST. WHEELCHAIR RAMP PER CITY STD. 304.
(7) CONST CATCH BASIN PER CITY STD. 405, L&V PER S.D. PLANS D-572
(9) CONST. BARRICADE PER CITY STD. 180
(11) CONST. 8" CURB ONLY PER CITY STD. 200 TYPE II
(12) DEPRESS CURB PER WHEELCHAIR RAMP CITY STD. 304
(13) INSTALL 2X4" REDWOOD HEADER
(14) CONST. CATCH BASIN PER CITY STD. 407, PER S.D. PLANS D-572
(16) SEED & MULCH PER LANDSCAPE PLANS & SPECIFICATIONS (BY OTHERS).

0 40 80 120

FAIR ISLE DRIVE

TENTATIVE TRACT 22061 (SEE DETAILED GRADING PLANS)

TENTATIVE PM 21168 (UNDEVELOPED PARCEL)

TENTATIVE TRACT 22408 (UNDEVELOPED PARCEL)

SEE SHEET NO. 2 — SEE SHEET NO. 6 OF 16.000 — SEE SHEET NO. 5 — SEE SHEET 7 FOR MEDIAN AND MEDIAN DRAINAGE DETAILS.

REGISTERED PROFESSIONAL ENGINEER — PAUL J. HAMILTON — No. 41627 — Exp. 12-31-87 — CIVIL — STATE OF CALIFORNIA

PACIFIC BELL TELEPHONE — APPROVED BY — DATE 10-27-87

SOUTHERN CALIFORNIA GAS CO. — APPROVED BY — DATE

APPROVED BY: — DATE: 12-7-87 — REG. CIVIL ENGINEER NO. 41627

APPROVED BY: — DATE:

NBS/LOWRY — ENGINEERS & PLANNERS — P.O. BOX 851 HEMET, CA. 92343 (714) 658-7116

SCALE: HORIZ. 1" = 40' VERT. 1" = 4'

DATE: MAR 1987

BENCH MARK: SEE LOWER LEFT

| MARK | REVISIONS | APPR. | DATE |
|---|---|---|---|
| 3 | ADDED CONDUIT CROSSING | | |
| 2 | REVISIONS PER TRACT 22408 | | |
| 1 | REVISED STA. & ELEV. | | |

DESIGNED BY DAW — DRAWN BY WRP — CHECKED BY PJH

# CITY OF RIVERSIDE
## PUBLIC WORKS DEPARTMENT

| | APPROVED BY | DATE |
|---|---|---|
| | PRINCIPAL ENGINEER | 4-8-88 |
| | PARK DEPARTMENT | 11-3-87 |
| | TRAFFIC DIVISION | 11-6-87 |
| | CHIEF P.W. ENGINEER | 4-5-88 |

APPROVED BY: William D. Hedden — PUBLIC WORKS DIRECTOR

DATE 4/4/88

# LUSK HIGHLANDER
## STREET IMPROVEMENT PLANS
## TRACT 22061
## FAIR ISLE DRIVE
## STA. 9+54.59 - STA. 16+00

HORIZ. SCALE: 1"=40' — VERT. SCALE: 1"=4'

ACCOUNT NO. 002705

R - 2941

SHEET 4 OF 10

H 80011.061

Pc 2215

FILE# PS-A-15732

INDEXED 4-15-88 GH

SCALE :
HORIZ: 1" = 40'
VERT: 1" = 4'

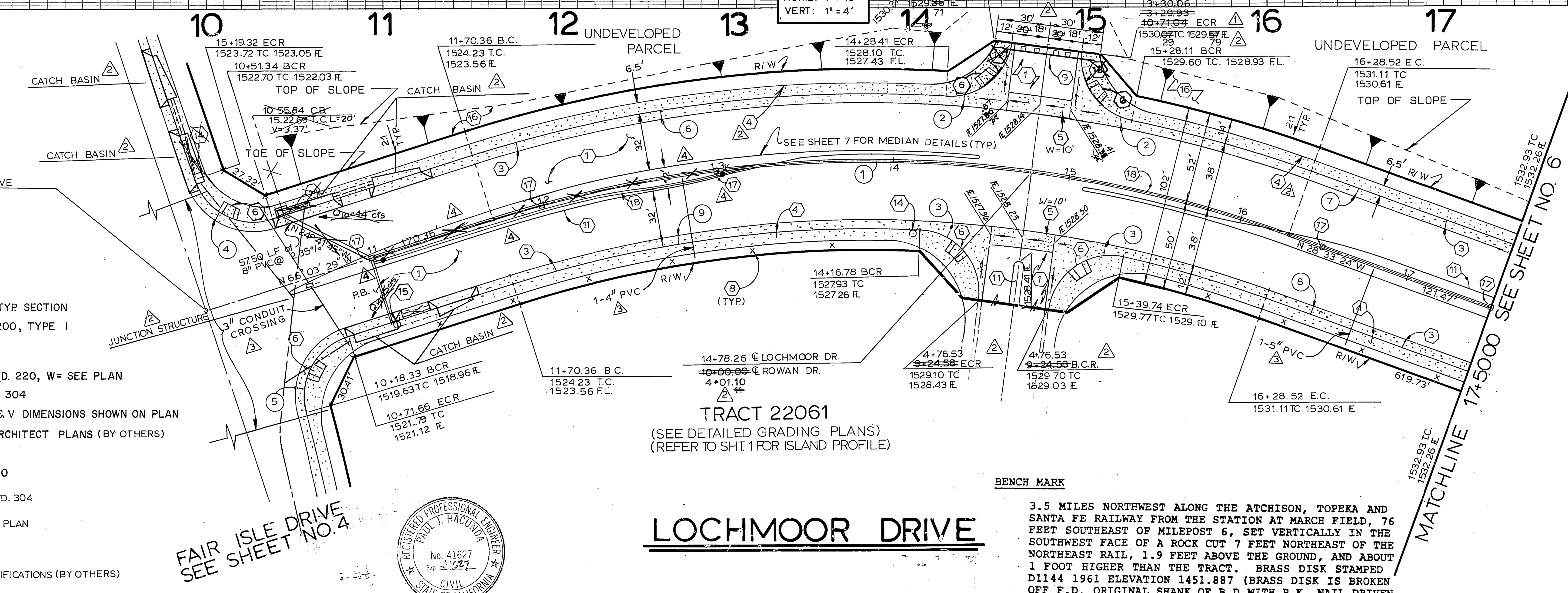


## LOCHMOOR DRIVE

## CONSTRUCTION NOTES

1. CONST. A.C. OVER CRUSHED AGG. BASE PER TYP. SECTION
3. CONST. 8" CURB & GUTTER PER CITY STD. 200, TYPE I WITH 5' BIKE LANE GUTTER
4. CONST. CURB SIDEWALK PER CITY STD. 325
5. CONST. CONC. CROSS GUTTER PER CITY STD. 220, W= SEE PLAN
6. CONST. WHEELCHAIR RAMPS PER CITY STD. 304
7. CONST. CATCH BASIN PER CITY STD. 400, L & V DIMENSIONS SHOWN ON PLAN
8. PLANT STREET TREES PER LANDSCAPE ARCHITECT PLANS (BY OTHERS)
9. CONST. BARRICADE PER CITY STD. 180
11. CONST. 8" CURB ONLY PER CITY STD. NO. 200
12. DEPRESS CURB PER WHEELCHAIR RAMP CITY STD. 304
14. CONST. CATCH BASIN PER STD. 407, L&V DIM. ON PLAN
15. FIRE HYDRANT PER CWD-700 (BY OTHERS)
16. SEED & MULCH PER LANDSCAPE PLANS & SPECIFICATIONS (BY OTHERS)
17. CONST. 18"x18" CATCH BASIN W/ GRATE PER BROOKS PRODUCTS DWG. NO. 1818 L 24 W/ PARKWAY GRATE OR APPROVED EQUAL (BY OTHERS)
18. CONSTRUCT 8" PVC PIPE (BY OTHERS)

| CURVE | DATA | | | |
|---|---|---|---|---|
| NO. | Δ | R | L | T |
| 1 | 37° 30' 05" | 700.00' | 458.17' | 237.63' |
| 2 | 86° 04' 07" | 35.00' | 52.58' | 32.68' |
| 3 | 95° 01' 57" | 35.00' | 58.05' | 38.22' |
| 4 | 88° 35' 37" | 35.00' | 54.12' | 34.15' |
| 5 | 87° 17' 58" | 35.00' | 53.33' | 33.39' |
| 6 | 21° 07' 20" | 738.00' | 272.07' | 137.59' |
| 7 | 8° 13' 08" | 738.00' | 105.86' | 53.02' |
| 8 | 7° 16' 00" | 662.00' | 83.96' | 42.04' |
| 9 | 20° 10' 12" | 662.00' | 233.05' | 117.74' |

40 0 40 80 120

BENCH MARK

3.5 MILES NORTHWEST ALONG THE ATCHISON, TOPEKA AND SANTA FE RAILWAY FROM THE STATION AT MARCH FIELD, 76 FEET SOUTHEAST OF MILEPOST 6, SET VERTICALLY IN THE SOUTHWEST FACE OF A ROCK CUT 7 FEET NORTHEAST OF THE NORTHEAST RAIL, 1.9 FEET ABOVE THE GROUND, AND ABOUT 1 FOOT HIGHER THAN THE TRACT. BRASS DISK STAMPED D1144 1961 ELEVATION 1451.887 (BRASS DISK IS BROKEN OFF F.D. ORIGINAL SHANK OF B.D WITH P.K. NAIL DRIVEN ALONG SIDE SHANK)

REGISTERED PROFESSIONAL ENGINEER PAUL J. HACUNDA No. 41627 CIVIL STATE OF CALIFORNIA

PACIFIC BELL TELEPHONE — APPROVED BY [signature] DATE 10-27-87

SOUTHERN CALIFORNIA GAS CO. — APPROVED BY [signature] DATE 10/13/87

APPROVED BY: [signature] REG. CIVIL ENGINEER NO. 41627 DATE: 12-1-87

APPROVED BY: DATE:

NBS/LOWRY ENGINEERS & PLANNERS P.O. BOX 851 HEMET, CA. 92343 (714) 658-7116

SCALE: HORIZ. 1" = 40' VERT. 1" = 4'
BENCH MARK: SEE ABOVE
DATE: MAR. 1987

| MARK | REVISIONS | APPR. | DATE |
|---|---|---|---|
| 4 | REVISED MEDIAN DRAIN | | 5/20/90 |
| 3 | ADDED CONDUIT CROSSING | | |
| 2 | REVISIONS PER TRACT 22408 | | |
| 1 | REVISED CURB RETURNS | | |

DESIGNED BY DW DRAWN BY WRP CHECKED BY PJH

# CITY OF RIVERSIDE
## PUBLIC WORKS DEPARTMENT

| APPROVED BY | DATE | BY |
|---|---|---|
| PRINCIPAL ENGINEER | 4-8-88 | |
| PARK DEPARTMENT | 11-3-87 | |
| TRAFFIC DIVISION | 4/8/88 | |
| CHIEF P. W. ENGINEER | 4-5-88 | |

APPROVED BY [signature] PUBLIC WORKS DIRECTOR DATE 4/11/88

# LUSK HIGHLANDER
STREET IMPROVEMENT PLANS
TRACT 22061
LOCHMOOR DRIVE
STA 10+00 - STA 17+50

HORIZ. SCALE: 1" = 40' VERT. SCALE: 1" = 4'

ACCOUNT NO. 002705
R-2941
SHEET 5 OF 10
H 80011.061

FILE# PS-4-15732
INDEXED 4-15-88 GH
Pc 2215

104556

1540 LT. / 1530 LT. / ~~1530 ℄~~ / 1540 / ~~1530 RT.~~ / 1540

1540 LT. / 1540 ℄ / 1540 RT.

PARTIAL 50' V.C.
30' V.C.
L=54.98
TRANS. FROM 8" TO 6" C.F.
TAN = 4.0%
1.43%
5.43%
1.89%
SO. CURB RETURN
30' V.C. PARTIAL 50' V.C.
L=54.98
TRANS. FROM 6" TO 8" C.F.
TAN = 4.0%
1.43%
3.83%
PARTIAL TRANS. FROM 50' V.C. TO 8" C.F.
P.I. = 1533.95
P.I. = 1538.99
TAN = 1.89%
PARTIAL 50' V.C.
P.I. = 1533.95
TRANS. FROM 6" TO 8" C.F.
54.98' O.C.
P.I. = 1538.37
TAN = (-) 5.49%
TAN = (-) 1.89%
SO. CURB RETURN

MATCHLINE 17+50.00 SEE SHEET NO. 15

1530 ℄
1530 RT.

TOP OF 8" CURB @ 38' LEFT ℄
TOP OF 8" CURB @ 38' RIGHT ℄
TOP OF MEDIAN
100 L.F. OF 8" PVC @ 1.5%
PROPOSED GRADE @ ℄
TOP OF CURB VARIABLE DISTANCE FROM ℄
TOP OF 6" CURB VARIABLE DISTANCE FROM ℄
END OF CONSTRUCTION
PROPOSED
EXISTING
L=54.98
SO. CURB RETURN
NO CURB RETURN

18 | 19 | 20 | 21 | 22 | 23 | 24

SCALE:
HORIZ: 1" = 40'
VERT: 1" = 4'

UNDEVELOPED PARCEL

SEE UPPER LEFT FOR CURB PROFILE

MATCHLINE 17+50.00 SEE SHT. NO. 5

FILL AREA TO DRAIN TO STREET

21+18.52 ℄ LOCHMOOR DRIVE
~~10+00.00~~ ℄ CHRISTIE DRIVE
2+92.81

SEE SHT. 7 FOR MEDIAN DETAILS

N 61° 26' 36" E
N 28° 33' 24" W
650.00'

TRACT 22061

619.73'

END 8" C.F.
BEGIN 8" C.F.

SEE UPPER RIGHT FOR CURB PROFILE

SEE SHEET 5 OF GRADING PLAN
(REFER TO SHT. 1 OF GRADING FOR ISLAND PROFILE)

END CONSTRUCTION SEE SHT. NO. 2 OF STREET SUBGRADE PLANS

LOCHMOOR DRIVE

## CONSTRUCTION NOTES

1. CONST. A.C. OVER AGG. BASE PER TYP. SECTION
2. ~~CONST. 6" CURB & GUTTER PER CITY STD. 200, TYPE I W/5' BIKE LANE GUTTER~~
3. CONST. 8" CURB & GUTTER PER CITY STD. 200, TYPE I W/5' BIKE LANE GUTTER
4. CONST. CURB SIDEWALK PER CITY STD. 325
5. CONST. CONC. CROSS GUTTER PER CITY STD. 220, W=SEE PLAN
6. CONST. WHEELCHAIR RAMP PER CITY STD. 304
9. CONST. BARRICADE PER CITY STD. 180
11. CONST 8" CURB ONLY PER CITY STD. 200, TYPE II
12. DEPRESS CURB PER WHEELCHAIR RAMP PER CITY STD. 304
13. SEED & MULCH PER LANDSCAPE PLANS & SPECIFICATIONS (BY OTHERS)
15. FIRE HYDRANT PER CWP-700 (BY OTHERS)
17. CONST. 18"x 18" CATCH BASIN W/ GRATE AS PER BROOKS PRODUCTS, DWG. NO. 1818 L 24 W/ PARKWAY GRATE OR APPROVED EQUAL (BY OTHERS)
18. CONSTRUCT 8" PVC PIPE (BY OTHERS)

| CURVE DATA | | | | |
|---|---|---|---|---|
| NO. | Δ | R | L | T |
| 1 | 90° 00' 00" | 35.00' | 54.98' | 35.00' |
| 2 | 18° 11' 45" | 150.00' | 47.64' | 24.02' |
| 3 | 2° 17' 31" | 500.00' | 20.00' | 10.00' |

40 0 40 80 120

BENCH MARK

3.5 MILES NORTHWEST ALONG THE ATCHISON, TOPEKA AND SANTA FE RAILWAY FROM THE STATION AT MARCH FIELD, 76 FEET SOUTHEAST OF MILEPOST 6, SET VERTICALLY IN THE SOUTHWEST FACE OF A ROCK CUT 7 FEET NORTHEAST OF THE NORTHEAST RAIL, 1.9 FEET ABOVE THE GROUND, AND ABOUT 1 FOOT HIGHER THAN THE TRACT. BRASS DISK STAMPED D1144 1961 ELEVATION 1451.887 (BRASS DISK IS BROKEN OFF F.D. ORIGINAL SHANK OF B.D WITH P.K. NAIL DRIVEN ALONG SIDE SHANK)

REGISTERED PROFESSIONAL ENGINEER PAUL T. HACKNEY No. 41627 Exp. 12-31-87 CIVIL STATE OF CALIFORNIA

PACIFIC BELL TELEPHONE
APPROVED BY ____ DATE 10/28/87

SOUTHERN CALIFORNIA GAS CO.
APPROVED BY ____ DATE 10/13/87

APPROVED BY: ____ DATE: 12-31-87
REG. CIVIL ENGINEER NO. 41627

APPROVED BY: ____ DATE:

NBS/LOWRY
ENGINEERS & PLANNERS
P.O. BOX 851 HEMET, CA. 92343 (714) 658-7116

SCALE: HORIZ. 1"= 40' VERT. 1"= 4'
DATE: MAR 1987

BENCH MARK: SEE ABOVE RIGHT.

| MARK | REVISIONS | APPR. | DATE |
|---|---|---|---|
| 2 | REVISIONS PER TRACT 22408 | | |
| 1 | REVISED CURB RETURN | | |

DESIGNED BY D.A.W. DRAWN BY W.R.P. CHECKED BY P.J.H.

# CITY OF RIVERSIDE
## PUBLIC WORKS DEPARTMENT

| APPROVED BY | DATE | BY |
|---|---|---|
| PRINCIPAL ENGINEER | 4-2-88 | |
| PARK DEPARTMENT | 4-3-87 | |
| TRAFFIC DIVISION | 4-6-88 | |
| CHIEF P. W. ENGINEER | 4-5-88 | |

APPROVED BY: PUBLIC WORKS DIRECTOR
DATE 4/4/88

# LUSK HIGHLANDER
## STREET IMPROVEMENT PLANS
## TR. 22061
## LOCHMOOR DRIVE
## 17+50 - 24+00

HORIZ. SCALE: 1"= 40' VERT. SCALE: 1"= 4'

ACCOUNT NO. 002705
R-2941
SHEET 6 OF 10
H 80011.061

Pc 22/5

FILE # FS-4-15732
INDEXED 4-15-88 ph

104556

FAIR ISLE DRIVE

SAWCUT & E.C. AND JOIN EXIST.

3" CONDUIT CROSSING

10+48.91
1522.94 TC(L)
1522.46 TC(R)

11+00

60.00'

S 66° 03' 29" E

N 66° 03' 29" W

TEE

CLEAN OUT

121.45'

38.8 L.F. OF 8" PVC @ 9.56%

11+70.36
1523.64 TC

12+00

~~12+28.41~~
~~1525.52 TC~~

TEE

2.5'

N

TRANSITION TO ℄

12+66.71
1526.09 TC

13+00

CLEAN OUT

N 60° 45' 08" W

40.67'

TEE

13+07.16
1526.74 TC

13+47.47
1527.42 TC

13+87.61
1528.03 TC

14+00

SAWCUT & EC AND JOIN EXIST.

14+47.27(RP)
1528.81 TC (L)
1528.93 TC (R)

15+00

MATCH WITH MIDDLE LEFT

# LOCHMOOR DRIVE

NORTH

MATCH WITH TOP RIGHT

15+09.42 (RP)
1529.86 TC (L)
1529.74 TC (R)

15+00

15+69.77
1530.77 TC

16+00

16+07.17
1531.30 TC

N 35° 59' 01" W

40.35'

TRANSITION TO 2.5' FROM FACE CURB

16+47.22
1531.84 TC

TEE

CLEAN OUT

16+28.52
1531.53 TC

16+87.22
1532.41 TC

2.5'

17+00

S 28° 33' 24" E

N 28° 33' 24" W

18+00

CLEAN OUT

TEE

400.30'

279.00'

32'

27'

12'

19+00

45° BEND

S 35° 40' 54" E 40.31'

19+07.52
1535.75 TC

19+47.52
1536.53 TC

20+00

S 28° 33' 24" E

60.00'

19+87.52
1537.35 TC

20+27.52
1538.13 TC

20+87.52 (RP)
1539.11 TC (L)
1539.23 TC (R)

NORTH

## CONSTRUCTION NOTES

(8) PLANT STREET TREES PER LANDSCAPE ARCH. PLANS (BY OTHERS)

(11) CONSTRUCT 8" CURB ONLY PER CITY STD. NO. 200

(17) CONSTRUCT 18"x18" CATCH BASIN W/ GRATE AS PER BROOKS PRODUCTS DWG. NO. 1818 L 24 W/ PARKWAY GRATE OR APPROVED EQUAL (BY OTHERS)

(18) CONSTRUCT 8" PVC PIPE (BY OTHERS)

(19) CONSTRUCT 8" PVC TO 36" RCP CONNECTION PER CITY STD. NO. 423, CASE 1 (BY OTHERS)

(20) REMOVE EXIST DROP INLET OR CLEANOUT AND PLUG END OF PIPE

(21) REMOVE AND SALVAGE TRAFFIC SIGNAL PULL BOX AND CONNECT CONDUITS

(1) CONSTRUCT 3¼" AC OVER 4" CRUSHED AGGREGATE BASE, PER SHEET NO. 1

REGISTERED PROFESSIONAL ENGINEER — SCOTT R. WILDERMUTH — No. 044783 — CIVIL — STATE OF CALIFORNIA

3 ALBERT A WEBB ASSOCIATES
FOR REVISION NO. 3
APPROVED 8-30-99 DATE

3 CITY OF RIVERSIDE
TRAFFIC DIVISION
APPROVED FOR REVISION NO. 3
8/31/99 DATE

CITY BUSINESS TAX NO. 005751
EXPIRES 12-31-98

NOTE:
ALL MEDIAN LANDSCAPE SHALL CONTAIN 40 % HARDSCAPE AND DRAINAGE SYSTEM SHOWN.

3

| CURVE DATA | | | | |
|---|---|---|---|---|
| NO. | Δ | R | L | T |
| (24) | 7°53'10" | 696.00 | 95.80 | 47.97 |
| (27) | 6°36'33" | 348.00 | 40.14 | 20.09 |
| (28) | 6°36'33" | 352.00 | 40.60 | 20.32 |
| (29) | 4°51'38" | 472.00 | 40.46 | 20.24 |
| (30) | 4°51'40" | 473.00 | 40.13 | 20.08 |
| (31) | 4°29'13" | 1196.00 | 93.66 | 46.85 |

| CURVE DATA | | | | | |
|---|---|---|---|---|---|
| No. | Δ | | R | L | T |
| (1) | 180° | 00' 00" | 2.00' | 3.14' | • |
| (2) | 7° | 09' 10" | 321.25' | 40.10' | 20.08' |
| (3) | 7° | 09' 12" | 321.25' | 40.11' | 20.08' |
| (4) | 7° | 53' 10" | 694.00' | 95.52' | 47.84' |
| (5) | 6° | 36' 33" | 350.00' | 40.37' | 20.21' |
| (6) | 17° | 54' 50" | 706.00' | 220.74' | 111.28' |
| (7) | 6° | 36' 33" | 350.00' | 40.37' | 20.21' |
| (8) | 4° | 52' 59" | 704.00' | 60.00' | 30.02' |
| (9) | 180° | 00' 00" | 2.00' | 3.14' | • |
| (10) | 180° | 00' 00" | 2.00' | 3.14' | • |
| (11) | 4° | 56' 21" | 696.00' | 60.00' | 30.02' |
| (12) | 9° | 44' 55" | 694.00' | 118.08' | 59.18' |
| (13) | 6° | 06' 57" | 350.00' | 37.36' | 18.70' |
| (14) | 6° | 33' 52" | 350.00' | 40.10' | 20.07' |
| (15) | 7° | 07' 30" | 322.49' | 40.10' | 20.08' |
| (16) | 7° | 07' 30" | 322.50' | 40.10' | 20.08' |
| (17) | 180° | 00' 00" | 2.00' | 3.14' | • |
| (18) | 89° | 58' 34" | 1.00' | 1.57' | 1.00' |
| | 90° | 01' 26" | 1.00' | 1.57' | 1.00' |
| (19) | 7° | 07' 56" | 1204.00' | 149.88' | 75.03' |
| (20) | 13° | 06' 44" | 1206.00' | 275.99' | 138.60' |
| (21) | 4° | 51' 38" | 475.00' | 40.30' | 20.16' |
| (22) | 4° | 51' 40" | 475.00' | 40.30' | 20.16' |
| (23) | 4° | 29' 13" | 1194.00' | 93.51' | 46.78' |
| (24) | 16° | 31' 00" | 302.83' | 87.30' | 43.95' |
| (25) | 88° | 10' 43" | 1.00' | 1.54' | 0.97' |
| | 79° | 33' 29" | 1.00' | 1.39' | 0.83' |

FUTURE INTERCONNECT

3" CONDUIT CROSSING 1½" CONDUIT

BOX SPRINGS BLVD

10+32.73 (RP)
1509.61 TC (L)
1509.40 TC (R)

10+00

11+00

12+00

STA. 12+20.00 CONNECTION

11+81.93
1514.16 TC

12+22.26
1515.38 TC

30.43 L.F. OF 8" PVC @ 9.94 %

N 41° 26' 36" W

40.34'

S 23° 44' 36" W

21.5' L.F. OF 8" PVC @ 26 %

N 41° 26' 36" W

SAWCUT & EC AND JOIN EXIST.

STA. 12+40.00 MEDIAN INLET

STA. 12+23 CONNECTION

12+62.08
1516.52 TC

13+00

13+02.46
1517.73 TC

PROPOSED STM DRAIN

N 41° 26' 36" W

STA. 13+40.32 MEDIAN INLET

26' L.F. OF 8 PVC @ 11%

~~13+07.35~~
~~1517.88 TC~~

STA. 13+20 CONNECTION

3" CONDUIT

13+96.44(RP)
1520.54 TC(L)
1520.73 TC(R)

14+00

SAWCUT & EC AND JOIN EXIST.

~~13+93.76~~
~~1520.63 TC~~

# FAIR ISLE DRIVE

BENCH MARK

3.5 MILES NORTHWEST ALONG THE ATCHISON, TOPEKA AND SANTA FE RAILWAY FROM THE STATION AT MARCH FIELD, 76 FEET SOUTHEAST OF MILEPOST 6, SET VERTICALLY IN THE SOUTHWEST FACE OF A ROCK CUT 7 FEET NORTHEAST OF THE NORTHEAST RAIL, 1.9 FEET ABOVE THE GROUND, AND ABOUT 1 FOOT HIGHER THAN THE TRACT. BRASS DISK STAMPED D1144 1961 ELEVATION 1451.887 (BRASS DISK IS BROKEN OFF F.D. ORIGINAL SHANK OF B.D WITH P.K. NAIL DRIVEN ALONG SIDE SHANK)

REGISTERED PROFESSIONAL ENGINEER — PAUL J. HACHMANN — No. 41627 — Exp. 12-31-97 — CIVIL — STATE OF CALIFORNIA

SOUTHERN CALIFORNIA GAS CO.
APPROVED BY _____ DATE _____

PACIFIC BELL TELEPHONE
APPROVED BY _____ DATE 10-29-97

APPROVED BY: _____
DATE: 12-31-97
REG. CIVIL ENGINEER NO. 41627

APPROVED BY: _____
DATE:

NBS/LOWRY
ENGINEERS & PLANNERS
P.O. BOX 851 HEMET, CA. 92343 (714) 658-7116

SCALE: 1" = 20'
DATE: MAR 1987

BENCH MARK: SEE LOWER LEFT

| MARK | REVISIONS | APPR. | DATE |
|---|---|---|---|
| 3 | REV. MEDIAN LOCHMOOR & FAIR ISLE | | |
| 2 | ADDED CONDUIT CROSSING | | |
| 1 | REVISIONS PER TRACT 22408 | | |

DESIGNED BY DAW DRAWN BY WRP CHECKED BY PJH

# CITY OF RIVERSIDE
## PUBLIC WORKS DEPARTMENT

| APPROVED BY | DATE | BY |
|---|---|---|
| PRINCIPAL ENGINEER | 4-8-88 | |
| PARK DEPARTMENT | | |
| TRAFFIC DIVISION | 4/8/88 | |
| CHIEF P. W. ENGINEER | 4-5-88 | |

APPROVED BY
William D. Jordan
PUBLIC WORKS DIRECTOR
DATE 4/11/88

LUSK HIGHLANDER
MEDIAN DETAILS FOR LOCHMOOR DRIVE AND FAIR ISLE DRIVE

HORIZ. SCALE: 1" = 20' VERT. SCALE: 1" = 20'

ACCOUNT NO. 002705

R-2941

SHEET 7 OF 10

H-80011.061

~~R-2315~~ PC-4169-M

FILE # PS-4-15732
INDEXED 4-15-88 HH

104556

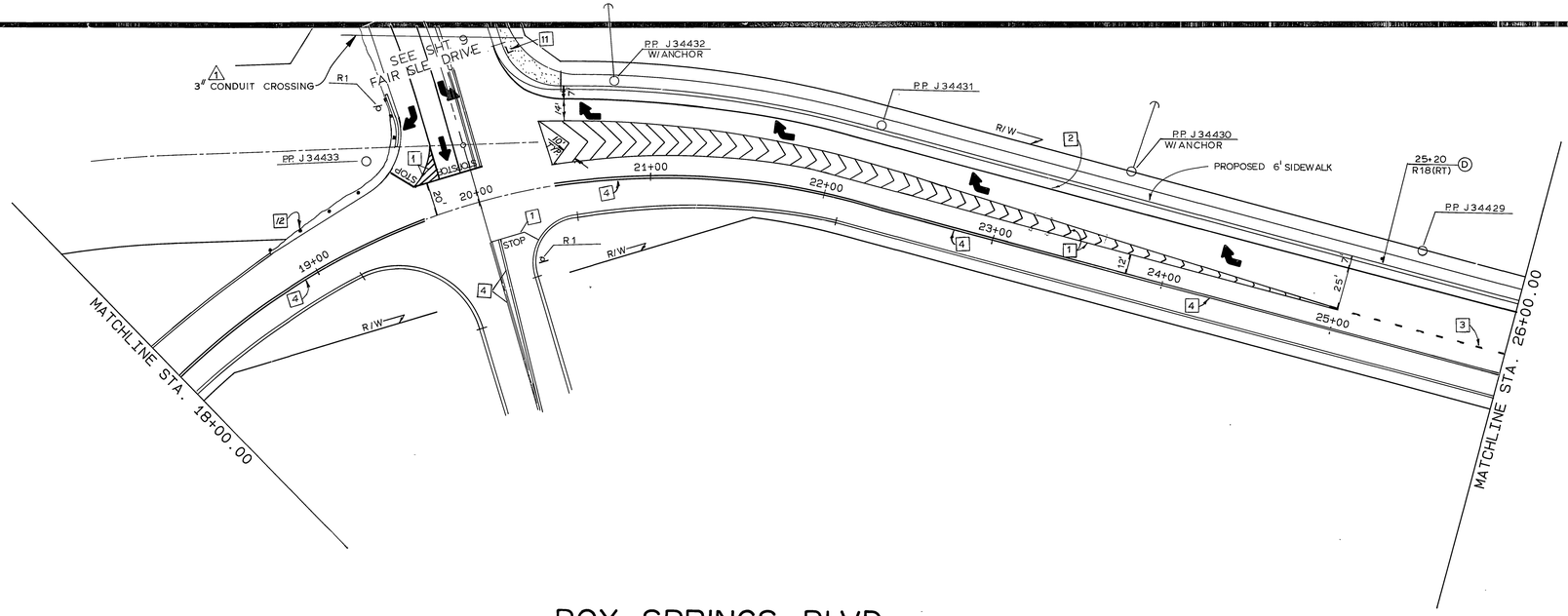


# BOX SPRINGS BLVD.

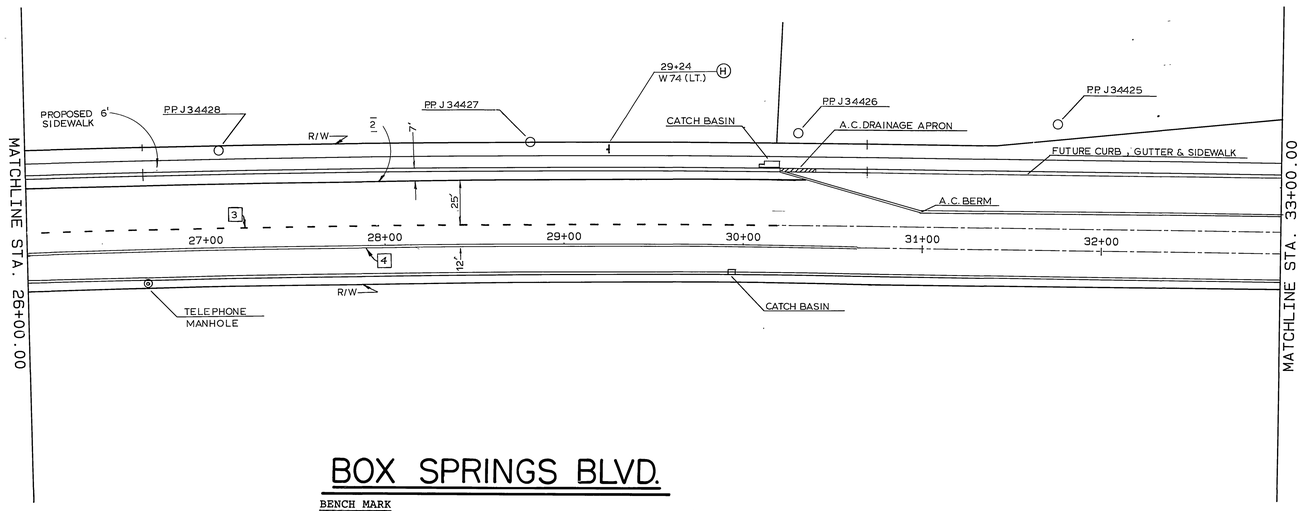


# BOX SPRINGS BLVD.

BENCH MARK

3.5 MILES NORTHWEST ALONG THE ATCHISON, TOPEKA AND SANTA FE RAILWAY FROM THE STATION AT MARCH FIELD, 76 FEET SOUTHEAST OF MILEPOST 6, SET VERTICALLY IN THE SOUTHWEST FACE OF A ROCK CUT 7 FEET NORTHEAST OF THE NORTHEAST RAIL, 1.9 FEET ABOVE THE GROUND, AND ABOUT 1 FOOT HIGHER THAN THE TRACT. BRASS DISK STAMPED D1144 1961 ELEVATION 1451.887 (BRASS DISK IS BROKEN OFF F.D. ORIGINAL SHANK OF B.D WITH P.K. NAIL DRIVEN ALONG SIDE SHANK)

REGISTERED PROFESSIONAL ENGINEER PAUL J. HACUNDA No. 41627 Exp. 12-31-87 CIVIL STATE OF CALIFORNIA

## LEGEND

- [1] 8" SOLID WHITE
- [2] 4" SOLID WHITE
- [3] 8" SKIP WHITE (3'STRIPE, 9'GAP)
- [4] 4" DOUBLE YELLOW
- [11] STREET NAME SIGN PER CITY STD. NO. 662 A
- [12] F-1 DELINEATOR 20' O.C.

40 0 40 80 120

PACIFIC BELL TELEPHONE

APPROVED BY _____ DATE 10/27/87

SOUTHERN CALIFORNIA GAS CO.

APPROVED BY _____ DATE _____

APPROVED BY: Paul J. Hacunda DATE: 12-31-87 REG. CIVIL ENGINEER NO. 41627

APPROVED BY: _____ DATE: _____

NBS/LOWRY ENGINEERS & PLANNERS P.O. BOX 851 HEMET, CA. 92343 (714) 658-7116

SCALE: 1" = 40'

DATE: APRIL 1987

BENCH MARK:

| MARK | REVISIONS | APPR. | DATE |
|---|---|---|---|
| 1 | ADDED CONDUIT CROSSING | | |

DESIGNED BY DAW DRAWN BY WRP CHECKED BY PJH

**CITY OF RIVERSIDE**
**PUBLIC WORKS DEPARTMENT**

| APPROVED BY | DATE | BY |
|---|---|---|
| PRINCIPAL ENGINEER | 4-8-88 | |
| PARK DEPARTMENT | | |
| TRAFFIC DIVISION | 4/8/88 | |
| CHIEF P. W. ENGINEER | | |

APPROVED BY _____ PUBLIC WORKS DIRECTOR

DATE 4/11/88

LUSK HIGHLANDER
STRIPING PLAN
TRACT 22061
BOX SPRINGS BLVD.
STA. 18+00 to STA. 33+00

HORIZ. SCALE: 1" = 40' VERT. SCALE: 1" = 40'

ACCOUNT NO. 002705

R-2941

SHEET 8 OF 10

H-80011.061

Pc 2215

FILE # PS-4-15732
INDEXED 4-15-88 HI

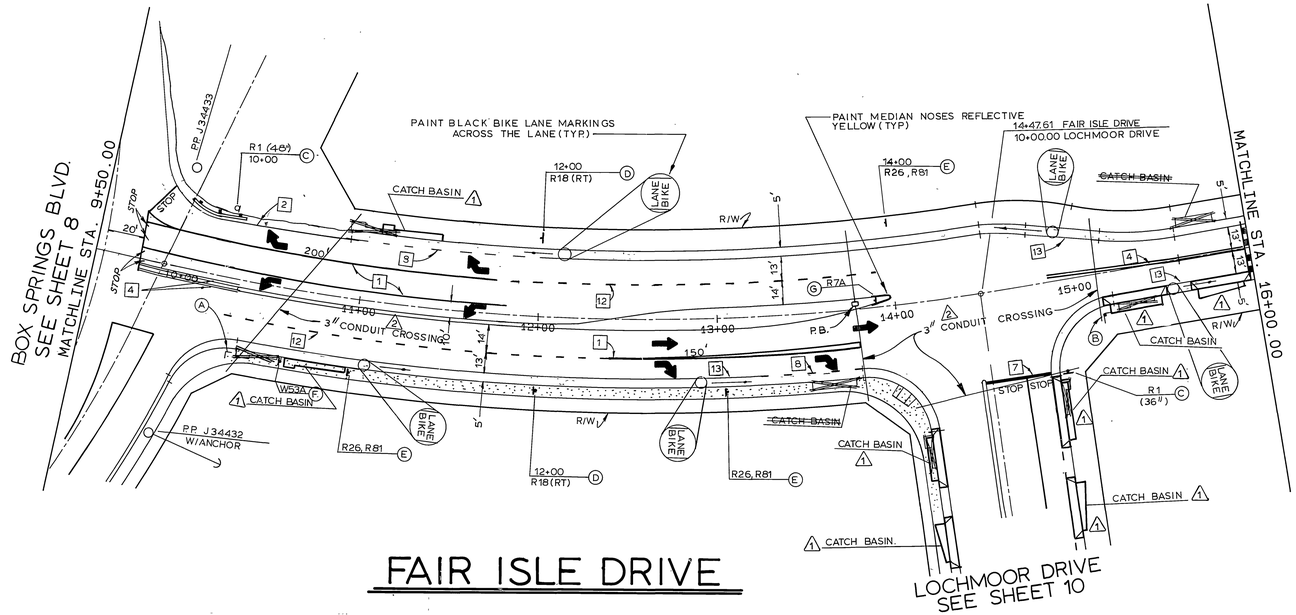


# FAIR ISLE DRIVE

## LEGEND

| | |
|---|---|
| 1 | 8" SOLID WHITE |
| 2 | 4" SOLID WHITE |
| 4 | 4" SOLID DOUBLE YELLOW |
| 7 | 12" SOLID WHITE |
| 8 | 6" SKIP WHITE (96 L.F. - 3' STRIPE, 9' GAP) |
| 12 | 8" SKIP WHITE (3' STRIPE, 9' GAP) |
| 13 | 6" SOLID WHITE |

## GENERAL NOTES:

1. ALL STRIPING AND SIGNING SHALL BE IN ACCORDANCE WITH CAL. DEPT. OF TRANSPORTATION TRAFFIC MANUAL.
2. ALL STRIPING AND SIGNING SHALL BE IN ACCORDANCE WITH THE CITY OF RIVERSIDE DEPT. OF PUBLIC WORKS, STANDARD DRAWINGS, CURRENT EDITION.

| | | TRAFFIC & STREET NAME SIGN SCHEDULE | | |
|---|---|---|---|---|
| | | Const. Per City Standard Drawings 662a & 666 | | |
| A | 1 | BOX SPRINGS BLVD. | 5700 | 11 A |
| | | FAIR ISLE DRIVE | 600 EAST | |
| B | 1 | FAIR ISLE DRIVE | 500 EAST | 11 B |
| | | LOCHMOOR DRIVE | 5700 | |
| C | 4 | STOP | | R-1 |
| D | 3 | RIGHT LANE MUST TURN RIGHT | | R18 (RT) |
| E | 12 | NO PARKING ANY TIME, BIKE LANE | | R26, R81 |
| F | 1 | NO OUTLET | | W53A |
| G | 1 | KEEP RIGHT | | R7A |
| H | 1 | THRU TRAFFIC MERGE LEFT | | W74 (LT) |
| I | 1 | LANE ENDS MERGE LEFT | | W75 |
| J | 1 | | | W11 |
| K | 1 | , STOP AHEAD | | W17A W17B |
| | | | | |
| | | | | |

REGISTERED PROFESSIONAL ENGINEER PAUL J. HACUNDA No. 41627 Exp. 12-31-87 CIVIL STATE OF CALIFORNIA

**BENCH MARK**

3.5 MILES NORTHWEST ALONG THE ATCHISON, TOPEKA AND SANTA FE RAILWAY FROM THE STATION AT MARCH FIELD, 76 FEET SOUTHEAST OF MILEPOST 6, SET VERTICALLY IN THE SOUTHWEST FACE OF A ROCK CUT 7 FEET NORTHEAST OF THE NORTHEAST RAIL, 1.9 FEET ABOVE THE GROUND, AND ABOUT 1 FOOT HIGHER THAN THE TRACT. BRASS DISK STAMPED D1144 1961 ELEVATION 1451.887 (BRASS DISK IS BROKEN OFF F.D. ORIGINAL SHANK OF B.D WITH P.K. NAIL DRIVEN ALONG SIDE SHANK)

40 0 40 80 120

PACIFIC BELL TELEPHONE
APPROVED BY DATE 10-27-87

SOUTHERN CALIFORNIA GAS CO.
APPROVED BY DATE
WR Larrabee 10/13/87

APPROVED BY: Paul J. Hacunda
DATE: 12-31-87 REG. CIVIL ENGINEER NO. 41627
APPROVED BY:
DATE:

NBS/LOWRY
ENGINEERS & PLANNERS
P.O. BOX 851 HEMET, CA. 92343 (714) 658-7116
SCALE: 1" = 40'
BENCH MARK:
DATE: APRIL 1987

| MARK | REVISIONS | APPR. | DATE |
|---|---|---|---|
| 2 | ADDED CONDUIT CROSSING | | |
| 1 | REVISIONS PER TRACT 22408 | | 5/24/88 |

DESIGNED BY DAW DRAWN BY WRP CHECKED BY PJH

CITY OF RIVERSIDE
PUBLIC WORKS DEPARTMENT

| APPROVED BY | DATE | BY |
|---|---|---|
| PRINCIPAL ENGINEER | 4-4-88 | |
| PARK DEPARTMENT | | |
| TRAFFIC DIVISION | 4/4/88 | |
| CHIEF P. W. ENGINEER | | |

APPROVED BY William D. Gardner
PUBLIC WORKS DIRECTOR
DATE 4/11/88

LUSK HIGHLANDER
STRIPING & SIGNING PLAN
TRACT 22061
FAIR ISLE DRIVE
STA. 9+50 to STA. 16+00

ACCOUNT NO. 002705
R-2941
SHEET 9 OF 10
HORIZ. SCALE: 1" = 40' VERT. SCALE: 1" = 40'
H-80011.061

PC 2215

FILE # PS-4-15732
INDEXED 4-15-88 4H

104556

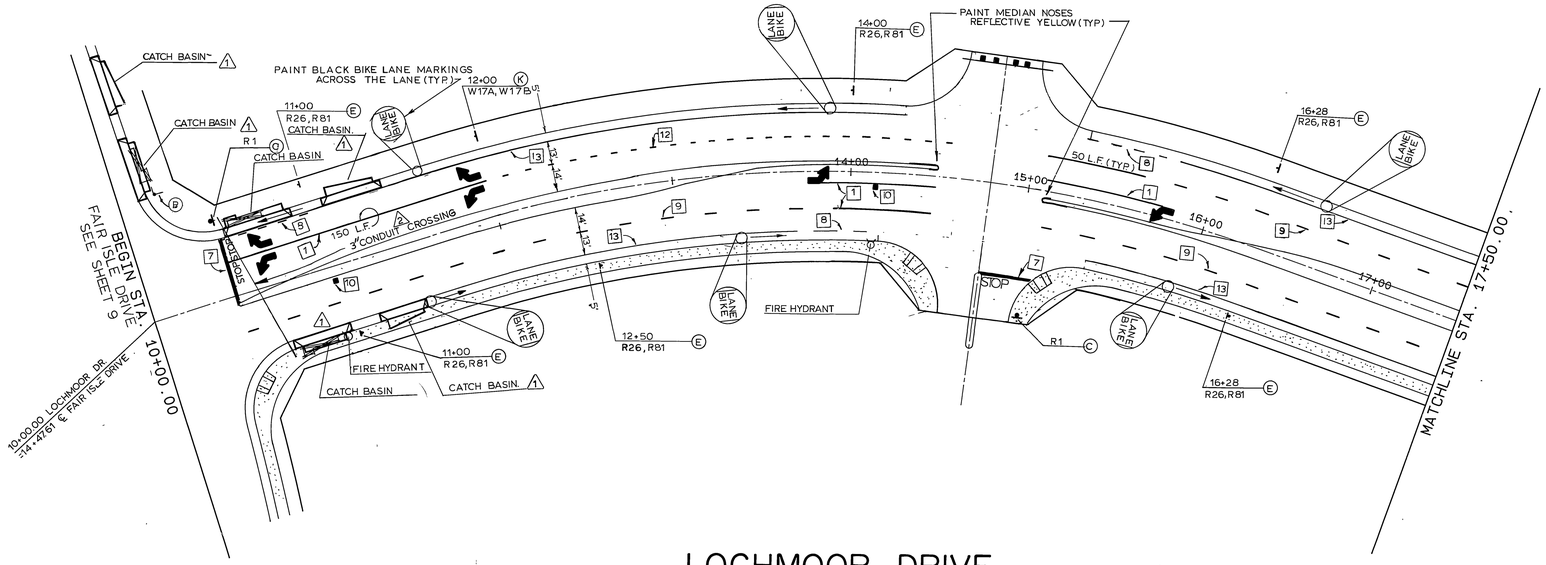


# LOCHMOOR DRIVE

## LEGEND

| | |
|---|---|
| 1 | 8" SOLID WHITE |
| 4 | 4" DOUBLE YELLOW |
| 5 | 4" SOLID YELLOW & 4" SKIP YELLOW (TWO-WAY LEFT TURN LANE) |
| 7 | 12" SOLID WHITE |
| 8 | 6" SKIP WHITE (96 LF. - 3' STRIPE, 9' GAP) |
| 9 | 4" SKIP WHITE (7' STRIPE, 17' GAP) |
| 10 | REFLECTIVE HYDRANT MARKER PER C.W.D.-700. |
| 12 | 8" SKIP WHITE (3' STRIPE, 9' GAP) |
| 13 | 6" SOLID WHITE |

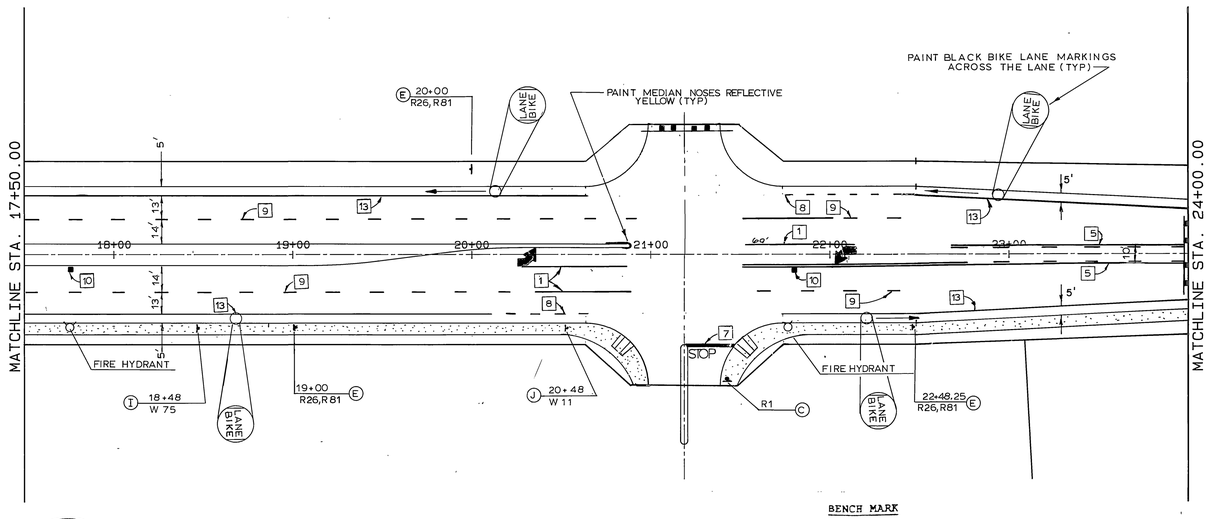


# LOCHMOOR DRIVE

BENCH MARK

3.5 MILES NORTHWEST ALONG THE ATCHISON, TOPEKA AND SANTA FE RAILWAY FROM THE STATION AT MARCH FIELD, 76 FEET SOUTHEAST OF MILEPOST 6, SET VERTICALLY IN THE SOUTHWEST FACE OF A ROCK CUT 7 FEET NORTHEAST OF THE NORTHEAST RAIL, 1.9 FEET ABOVE THE GROUND, AND ABOUT 1 FOOT HIGHER THAN THE TRACT. BRASS DISK STAMPED D1144 1961 ELEVATION 1451.887 (BRASS DISK IS BROKEN OFF F.D. ORIGINAL SHANK OF B.D WITH P.K. NAIL DRIVEN ALONG SIDE SHANK)

REGISTERED PROFESSIONAL ENGINEER PAUL J. TACONDA No. 41627 Exp 12-31-87 CIVIL STATE OF CALIFORNIA

PACIFIC BELL TELEPHONE
APPROVED BY _____ DATE 10-27-87

SOUTHERN CALIFORNIA GAS CO.
APPROVED BY _____ DATE 10/13/87

APPROVED BY: _____
DATE: 12-31-87
REG. CIVIL ENGINEER NO. 41627

APPROVED BY: _____
DATE:

NBS/LOWRY
ENGINEERS & PLANNERS
P.O. BOX 851 HEMET, CA. 92343 (714) 658-7116

SCALE: 1"= 40'
DATE: APRIL 1987
BENCH MARK:

| MARK | REVISIONS | APPR. | DATE |
|---|---|---|---|
| 2 | ADDED CONDUIT CROSSING | DAW | 12-31-87 |
| 1 | REVISIONS PER TRACT 22408 | DAW | 11-24-87 |

DESIGNED BY DAW DRAWN BY WRP CHECKED BY PJH

CITY OF RIVERSIDE
PUBLIC WORKS DEPARTMENT

| APPROVED BY | DATE | BY |
|---|---|---|
| PRINCIPAL ENGINEER | 4-8-88 | |
| PARK DEPARTMENT | | |
| TRAFFIC DIVISION | | |
| CHIEF P.W. ENGINEER | | |

APPROVED BY
PUBLIC WORKS DIRECTOR
DATE 4/11/88

LUSK HIGHLANDER
STRIPING & SIGNING PLAN
TRACT 22061
LOCHMOOR DRIVE
STA. 10+00 to STA. 24+00

HORIZ. SCALE: 1"= 40' VERT. SCALE: 1"= 40'

ACCOUNT NO. 002705
R-2941
SHEET 10 OF 10
H- 80011.061

FILE # PS-4-15732
INDEXED 4-15-88 GH

Pc 2215